The Electric Power Engineering Handbook

ELECTRIC POWER TRANSFORMER ENGINEERING

THIRD EDITION

EDITED BY **JAMES H. HARLOW**

CRC Press
Taylor & Francis Group

www.EngineeringEbooksPdf.com

The Electric Power Engineering Handbook

ELECTRIC POWER TRANSFORMER ENGINEERING

THIRD EDITION

www.EngineeringEbooksPdf.com

The Electric Power Engineering Handbook

Third Edition

Edited by

Leonard L. Grigsby

Electric Power Generation, Transmission, and Distribution, Third Edition

Edited by Leonard L. Grigsby

Electric Power Transformer Engineering, Third Edition

Edited by James H. Harlow

Electric Power Substations Engineering, Third Edition

Edited by John D. McDonald

Power Systems, Third Edition

Edited by Leonard L. Grigsby

Power System Stability and Control, Third Edition

Edited by Leonard L. Grigsby

www.EngineeringEbooksPdf.com

The Electric Power Engineering Handbook

ELECTRIC POWER TRANSFORMER ENGINEERING

THIRD EDITION

EDITED BY
JAMES H. HARLOW

CRC Press
Taylor & Francis Group
Boca Raton London New York

CRC Press is an imprint of the
Taylor & Francis Group, an **informa** business

www.EngineeringEbooksPdf.com

Cover credit: Big Stock Photo.

CRC Press
Taylor & Francis Group
6000 Broken Sound Parkway NW, Suite 300
Boca Raton, FL 33487-2742

© 2012 by Taylor & Francis Group, LLC
CRC Press is an imprint of Taylor & Francis Group, an Informa business

No claim to original U.S. Government works
Version Date: 20111103

International Standard Book Number-13: 978-1-4398-5636-9 (eBook - PDF)

This book contains information obtained from authentic and highly regarded sources. Reasonable efforts have been made to publish reliable data and information, but the author and publisher cannot assume responsibility for the validity of all materials or the consequences of their use. The authors and publishers have attempted to trace the copyright holders of all material reproduced in this publication and apologize to copyright holders if permission to publish in this form has not been obtained. If any copyright material has not been acknowledged please write and let us know so we may rectify in any future reprint.

Except as permitted under U.S. Copyright Law, no part of this book may be reprinted, reproduced, transmitted, or utilized in any form by any electronic, mechanical, or other means, now known or hereafter invented, including photocopying, microfilming, and recording, or in any information storage or retrieval system, without written permission from the publishers.

For permission to photocopy or use material electronically from this work, please access www.copyright.com (http://www.copyright.com/) or contact the Copyright Clearance Center, Inc. (CCC), 222 Rosewood Drive, Danvers, MA 01923, 978-750-8400. CCC is a not-for-profit organization that provides licenses and registration for a variety of users. For organizations that have been granted a photocopy license by the CCC, a separate system of payment has been arranged.

Trademark Notice: Product or corporate names may be trademarks or registered trademarks, and are used only for identification and explanation without intent to infringe.

Visit the Taylor & Francis Web site at
http://www.taylorandfrancis.com

and the CRC Press Web site at
http://www.crcpress.com

www.EngineeringEbooksPdf.com

Contents

Preface vii

Editor ix

Contributors xi

1 Theory and Principles **1**-1
Dennis J. Allan and Harold Moore

2 Power Transformers **2**-1
H. Jin Sim and Scott H. Digby

3 Distribution Transformers **3**-1
Dudley L. Galloway, Dan Mulkey, and Alan L. Wilks

4 Phase-Shifting Transformers **4**-1
Gustav Preininger

5 Rectifier Transformers **5**-1
Sheldon P. Kennedy

6 Dry-Type Transformers **6**-1
Charles W. Johnson Jr.

7 Instrument Transformers **7**-1
Randy Mullikin

8 Step-Voltage Regulators **8**-1
Craig A. Colopy

9 Constant-Voltage Transformers **9**-1
Arindam Maitra, Anish Gaikwad, Arshad Mansoor, Douglas Dorr, and Ralph Ferraro

10 Transformers for Wind Turbine Generators and Photovoltaic Applications **10**-1
David E. Buckmaster and Hemchandra Shertukde

11 Reactors **11**-1
Richard F. Dudley, Michael Sharp, Antonio Castanheira, and Behdad B. Biglar

www.EngineeringEbooksPdf.com

12 Insulating Media **12**-1
Thomas A. Prevost, David L. Hanson, Leo J. Savio, and Ted Haupert

13 Electrical Bushings **13**-1
Loren B. Wagenaar

14 Tap Changers and Smart Intelligent Controls **14**-1
Dieter Dohnal, Axel Kraemer, and Karsten Viereck

15 Loading and Thermal Performance **15**-1
Robert F. Tillman Jr. and Don A. Duckett

16 Transformer Connections **16**-1
Stephen Shull and Dan D. Perco

17 Transformer Testing **17**-1
Shirish P. Mehta and William R. Henning

18 Load-Tap-Change Control and Transformer Paralleling **18**-1
James H. Harlow

19 Power Transformer Protection **19**-1
Armando Guzmán, Hector J. Altuve, and Gabriel Benmouyal

20 Causes and Effects of Transformer Sound Levels **20**-1
Jeewan L. Puri

21 Transient-Voltage Response of Coils and Windings **21**-1
Robert C. Degeneff

22 Transformer Installation and Maintenance **22**-1
Troy D. Kabrich

23 Problem and Failure Investigation **23**-1
Wallace B. Binder and Harold Moore

24 On-Line Monitoring of Liquid-Immersed Transformers **24**-1
Gary R. Hoffman

25 U.S. Power Transformer Equipment Standards and Processes **25**-1
Philip J. Hopkinson

www.EngineeringEbooksPdf.com

Preface

It is appropriate that I first acknowledge my appreciation to Professor Leo Grigsby for inviting me to prepare the chapter on power transformers for the first edition (2001) of his now very popular Electric Power Engineering Handbook. From that evolved the recognition that two chapters from the 2001 handbook, those for (1) substations and (2) transformers, could be extracted, expanded, and be offered as stand-alone books while retaining the composite association with Professor Grigsby's overall work. Thus, the first edition of *Electric Power Transformer Engineering* was offered by CRC Press in 2004, the second edition in 2007, and now this third edition.

As editor of the book, my charge to the chapter authors was to direct their messages to engineers who know the basic physics, or applications, or possess a hands-on working knowledge of power transformers. Thus, it is believed that all persons with a power transformer background experience, be they merely curious, seasoned professionals, or acknowledged experts, will find much in the book with which to relate, and that all such readers will glean material appropriate to their individual degree of expertise.

The book is topically structured three parts:

Chapter 1. Theory and principles:

Illustrating to electrical engineers the relevant theories and principles (concepts and mathematics) of power transformers.

Chapters 2 through 11:

Devoting a complete chapter to each of ten particular embodiments of power transformers and closely related apparatus.

- Power transformers
- Distribution transformers
- Phase-shifting transformers
- Rectifier transformers
- Dry-type transformers
- Instrument transformers
- Step-voltage regulators
- Constant-voltage transformers
- Transformers for wind turbine generators and photovoltaic applications
- Reactors

Chapters 12 through 25:

Delving into 14 ancillary topics that are fundamental to the operation or design of the basic transformer.

- Insulating media
- Electrical bushings

www.EngineeringEbooksPdf.com

- Tap changers and smart intelligent controls
- Loading and thermal performance
- Transformer connections
- Transformer testing
- Load-tap-change control and transformer paralleling
- Power transformer protection
- Causes and effects of transformer sound levels
- Transient-voltage response of coils and windings
- Transformer installation and maintenance
- Problem and failure investigation
- Online monitoring of liquid-immersed transformers
- The United States power transformer equipment standards and processes

While many of these chapter titles remain as in the second edition, the reader will quickly recognize that most have been significantly expanded with new and updated material for this third edition. Each chapter is replete with photographs, equations, and tabular data appropriate to the discussion.

For my part, the manner by which I have been most useful to the production of this book is simply by virtue of the long-standing (and always most enjoyable) association I have had with the experts who comprise the chapter authors. Each author has enthusiastically supported the effort. This offers a peek into the unselfish attitude of the community of power transformer engineers, without which, and without whom, I could never alone have undertaken to produce the work.

James H. Harlow, PE
Editor

www.EngineeringEbooksPdf.com

Editor

James H. Harlow is self-employed as principal of Harlow Engineering Associates, consulting to the electric power industry since 1996. Prior to this, he had 34 years of industry experience with Siemens (and its predecessor company Allis-Chalmers) and Beckwith Electric. While at these firms, he managed or conducted groundbreaking projects that blended electronics into power transformer applications. Two such projects were the introduction of the first microprocessor-based intelligent electronic device used in quantity in utility substation environments (for the automatic control of load tap changers) and a power-thyristor-based load tap changer to accomplish arc mitigation during the tap change event in step-voltage regulators.

Harlow received his BSEE from Lafayette College, his MBA (statistics) from Jacksonville State University, and his MS (electric power) from Mississippi State University. He joined the IEEE PES Transformers Committee in 1982 serving in various capacities before becoming an officer, culminating as chair of the committee for 1994–1995. In this capacity, he exercised oversight of all power transformer standards that are sponsored by the IEEE. During this period, he served on the IEEE delegation to the ANSI C57 Main Committee (Transformers). As chair of the Transformers Committee, he was a member of the IEEE PES Technical Council, the assemblage of leaders of the various technical committees that comprise the IEEE Power and Energy Society. Continuing involvement led to serving as PES vice president of technical activities and chair of the Technical Council for the years 2001–2002.

Harlow has authored more than 30 technical articles and papers, including serving as editor of the transformer section of the 2001, 2004, and 2007 editions of The Electric Power Engineering Handbook, CRC Press. His editorial contribution within this book is the chapter on his specialty, LTC control and transformer paralleling (Chapter 18). A holder of six U.S. patents, Harlow is a registered professional engineer and a life-senior member of the IEEE.

www.EngineeringEbooksPdf.com

www.EngineeringEbooksPdf.com

Contributors

Dennis J. Allan
Merlin Design
Stafford, England

Hector J. Altuve
Schweitzer Engineering Laboratories, Inc.
Pullman, Washington

Gabriel Benmouyal
Schweitzer Engineering Laboratories, Inc.
Pullman, Washington

Behdad B. Biglar
Trench Limited
Toronto, Ontario, Canada

Wallace B. Binder
WBBinder Consultant
New Castle, Pennsylvania

David E. Buckmaster
Consultant
Charlotte, North Carolina

Antonio Castanheira
Trench Limited
Bom Sucesso, Minas Gerais, Brazil

Craig A. Colopy
Cooper Power Systems Inc.
Waukesha, Wisconsin

Robert C. Degeneff
Utility Systems Technology, Inc.
Watervliet, New York

Scott H. Digby
Progress Energy
Raleigh, North Carolina

Dieter Dohnal
Maschinenfabrik Reinhausen GmbH
Regensburg, Germany

Douglas Dorr
Electric Power Research Institute
Palo Alto, California

Don A. Duckett
HD Supply-Utilities
Orlando, Florida

Richard F. Dudley
Trench Limited
Nelson, British Columbia, Canada

Ralph Ferraro
Power Quality Solutions, Inc.
Knoxville, Tennessee

Anish Gaikwad
Electric Power Research Institute
Palo Alto, California

Dudley L. Galloway
Galloway Transformer Technology, LLC
Jefferson City, Missouri

Armando Guzmán
Schweitzer Engineering Laboratories, Inc.
Pullman, Washington

www.EngineeringEbooksPdf.com

David L. Hanson
TJ/H2b Analytical Services
Sacramento, California

James H. Harlow
Harlow Engineering Associates
Mentone, Alabama

Ted Haupert
TJ/H2b Analytical Services
Sacramento, California

William R. Henning
Waukesha Electric Systems
Waukesha, Wisconsin

Gary R. Hoffman
Advanced Power Technologies
Randolph, New Jersey

Philip J. Hopkinson
HVOLT, Inc.
Charlotte, North Carolina

Charles W. Johnson Jr.
ABB, Inc.
Bland, Virginia

Troy D. Kabrich
Waukesha Electric Systems
Waukesha, Wisconsin

Sheldon P. Kennedy
Niagara Transformer Corporation
Buffalo, New York

Axel Kraemer
Maschinenfabrik Reinhausen GmbH
Regensburg, Germany

Arindam Maitra
Electric Power Research Institute
Palo Alto, California

Arshad Mansoor
Electric Power Research Institute
Palo Alto, California

Shirish P. Mehta
Waukesha Electric Systems
Waukesha, Wisconsin

Harold Moore
H. Moore and Associates
Niceville, Florida

Dan Mulkey
Pacific Gas and Electric Company
Petaluma, California

Randy Mullikin
Meramec Electrical Products
Cuba, Missouri

Dan D. Perco
Perco Transformer Engineering
Stoney Creek, Ontario, Canada

Gustav Preininger
Consultant
Graz, Austria

Thomas A. Prevost
Omicron Electronics Corp.
Waltham, Massachusetts

Jeewan L. Puri
Transformer Solutions
Matthews, North Carolina

Leo J. Savio
ADAPT Corporation
Myerstown, Pennsylvania

Michael Sharp
Trench Limited
Scarborough, Ontario, Canada

Hemchandra Shertukde
University of Hartford
West Hartford, Connecticut

and

Department of Electrical Engineering
School of Engineering and Applied Sciences
Yale University
New Haven, Connecticut

www.EngineeringEbooksPdf.com

Stephen Shull
The Empire District Electric Company
Joplin, Missouri

H. Jin Sim
Waukesha Electric Systems
Goldsboro, North Carolina

Robert F. Tillman Jr.
Southern Company Services Inc.
Birmingham, Alabama

Karsten Viereck
Maschinenfabrik Reinhausen GmbH
Regensburg, Germany

Loren B. Wagenaar
WagenTrans Consulting, LLC
Pickerington, Ohio

Alan L. Wilks
Consultant
Dyersburg, Tennessee

www.EngineeringEbooksPdf.com

www.EngineeringEbooksPdf.com

1

Theory and Principles

Dennis J. Allan
Merlin Design

Harold Moore
H. Moore and Associates

1.1 Air Core Transformer **1**-1
1.2 Iron or Steel Core Transformer **1**-3
1.3 Equivalent Circuit of an Iron-Core Transformer **1**-4
1.4 The Practical Transformer **1**-8
Magnetic Circuit • Leakage Reactance • Load Losses • Short-Circuit Forces • Thermal Considerations • Voltage Considerations
Bibliography **1**-13

Transformers are devices that transfer energy from one circuit to another by means of a common magnetic field. In all cases except autotransformers, there is no direct electrical connection from one circuit to the other.

When an alternating current flows in a conductor, a magnetic field exists around the conductor, as illustrated in Figure 1.1. If another conductor is placed in the field created by the first conductor such that the flux lines link the second conductor, as shown in Figure 1.2, then a voltage is induced into the second conductor. The use of a magnetic field from one coil to induce a voltage into a second coil is the principle on which transformer theory and application is based.

1.1 Air Core Transformer

Some small transformers for low-power applications are constructed with air between the two coils. Such transformers are inefficient because the percentage of the flux from the first coil that links the second coil is small. The voltage induced in the second coil is determined as follows.

$$E = \frac{N\,d\phi}{dt\,10^8} \tag{1.1}$$

where

N is the number of turns in the coil
$d\phi/dt$ is the time rate of change of flux linking the coil
ϕ is the flux in lines

At a time when the applied voltage to the coil is E and the flux linking the coils is ϕ lines, the instantaneous voltage of the supply is:

$$e = \sqrt{2}\,E\cos\omega t = \frac{N\,d\phi}{dt\,10^8} \tag{1.2}$$

www.EngineeringEbooksPdf.com

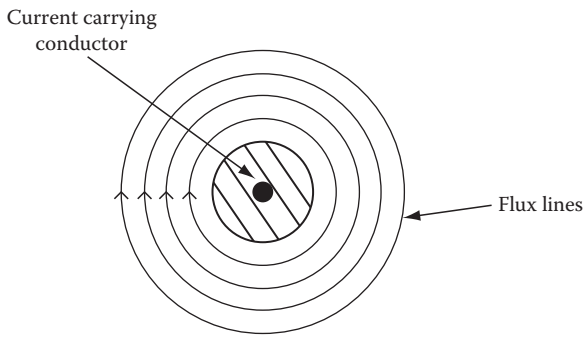

FIGURE 1.1 Magnetic field around conductor.

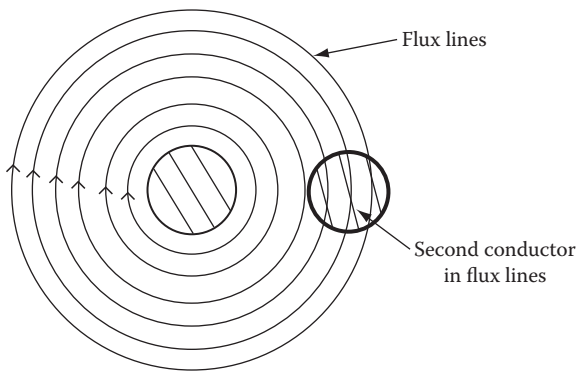

FIGURE 1.2 Magnetic field around conductor induces voltage in second conductor.

$$\frac{d\phi}{dt} = \frac{(\sqrt{2}\cos\omega t 10^8)}{N} \tag{1.3}$$

The maximum value of ϕ is given by:

$$\phi = \frac{(\sqrt{2}E10^8)}{(2\pi f N)} \tag{1.4}$$

Using the MKS (metric) system, where ϕ is the flux in webers,

$$E = \frac{N d\phi}{dt} \tag{1.5}$$

and

$$\phi = \frac{(\sqrt{2}E)}{(2\pi f N)} \tag{1.6}$$

Since the amount of flux ϕ linking the second coil is a small percentage of the flux from the first coil, the voltage induced into the second coil is small. The number of turns can be increased to increase the voltage output, but this will increase costs. The need then is to increase the amount of flux from the first coil that links the second coil.

www.EngineeringEbooksPdf.com

1.2 Iron or Steel Core Transformer

The ability of iron or steel to carry magnetic flux is much greater than air. This ability to carry flux is called permeability. Modern electrical steels have permeabilities in the order of 1500 compared with 1.0 for air. This means that the ability of a steel core to carry magnetic flux is 1500 times that of air. Steel cores were used in power transformers when alternating current circuits for distribution of electrical energy were first introduced. When two coils are applied on a steel core, as illustrated in Figure 1.3, almost 100% of the flux from coil 1 circulates in the iron core so that the voltage induced into coil 2 is equal to the coil 1 voltage if the number of turns in the two coils are equal.

Continuing in the MKS system, the fundamental relationship between magnetic flux density (B) and magnetic field intensity (H) is:

$$B = \mu_0 H \tag{1.7}$$

where μ_0 is the permeability of free space = $4\pi \times 10^{-7}$ Wb A^{-1} m^{-1}.

Replacing B by ϕ/A and H by $(IN)/d$

where
- ϕ is the core flux in lines
- N is the number of turns in the coil
- I is the maximum current in amperes
- A is the core cross-section area

the relationship can be rewritten as:

$$\phi = \frac{(\mu NAI)}{d} \tag{1.8}$$

where
- d is the mean length of the coil in meters
- A is the area of the core in square meters

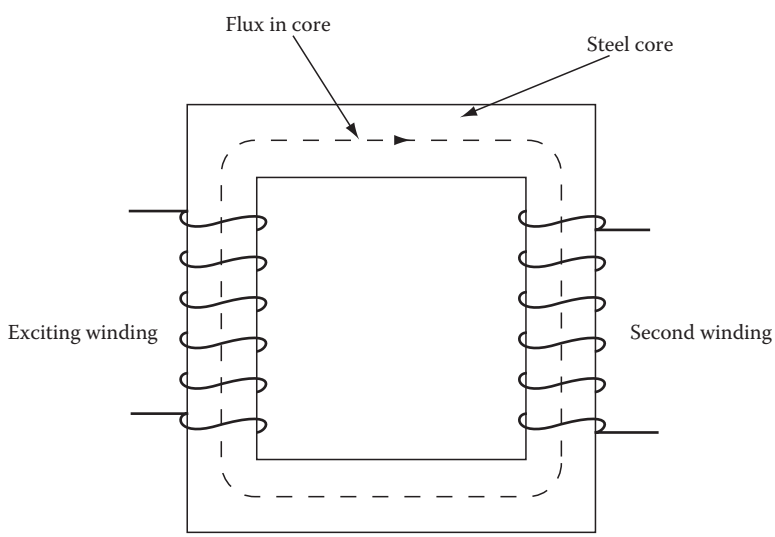

FIGURE 1.3 Two coils applied on a steel core.

www.EngineeringEbooksPdf.com

Then, the equation for the flux in the steel core is:

$$\phi = \frac{(\mu_0 \mu_r NAI)}{d} \tag{1.9}$$

where, μ_r is the relative permeability of steel ≈1500.

Since the permeability of the steel is very high compared with air, all of the flux can be considered as flowing in the steel and is essentially of equal magnitude in all parts of the core. The equation for the flux in the core can be written as follows:

$$\phi = \frac{0.225E}{fN} \tag{1.10}$$

where

E is the applied alternating voltage
F is the frequency in hertz
N is the number of turns in the winding

In transformer design, it is useful to use flux density, and Equation 1.10 can be rewritten as:

$$B = \frac{\phi}{A} = \frac{0.225E}{(fAN)} \tag{1.11}$$

where, B is the flux density in tesla (webers/square meter).

1.3 Equivalent Circuit of an Iron-Core Transformer

When voltage is applied to the exciting or primary winding of the transformer, a magnetizing current flows in the primary winding. This current produces the flux in the core. The flow of flux in magnetic circuits is analogous to the flow of current in electrical circuits.

When flux flows in the steel core, losses occur in the steel. There are two components of this loss, which are termed "eddy" and "hysteresis" losses. An explanation of these losses would require a full chapter. For the purpose of this text, it can be stated that the hysteresis loss is caused by the cyclic reversal of flux in the magnetic circuit and can be reduced by metallurgical control of the steel. Eddy loss is caused by eddy currents circulating within the steel induced by the flow of magnetic flux normal to the width of the core, and it can be controlled by reducing the thickness of the steel lamination or by applying a thin insulating coating.

Eddy loss can be expressed as follows:

$$W = K[w]^2[B]^2 \text{ Watts} \tag{1.12}$$

where

K is the constant
W is the width of the core lamination material normal to the flux
B is the flux density

If a solid core were used in a power transformer, the losses would be very high and the temperature would be excessive. For this reason, cores are laminated from very thin sheets, such as 0.23 and 0.28 mm, to reduce the thickness of the individual sheets of steel normal to the flux and thereby reducing the losses.

www.EngineeringEbooksPdf.com

Each sheet is coated with a very thin material to prevent shorts between the laminations. Improvements made in electrical steels over the past 50 years have been the major contributor to smaller and more efficient transformers. Some of the more dramatic improvements include:

- Development of cold-rolled grain-oriented (CGO) electrical steels in the mid 1940s
- Introduction of thin coatings with good mechanical properties
- Improved chemistry of the steels, e.g., Hi-B steels
- Further improvement in the orientation of the grains
- Introduction of laser-scribed and plasma-irradiated steels
- Continued reduction in the thickness of the laminations to reduce the eddy-loss component of the core loss
- Introduction of amorphous ribbon (with no crystalline structure)—manufactured using rapid-cooling technology—for use with distribution and small power transformers

The combination of these improvements has resulted in electrical steels having less than 40% of the no-load loss and 30% of the exciting (magnetizing) current that was possible in the late 1940s.

The effect of the cold-rolling process on the grain formation is to align magnetic domains in the direction of rolling so that the magnetic properties in the rolling direction are far superior to those in other directions. A heat-resistant insulation coating is applied by thermochemical treatment to both sides of the steel during the final stage of processing. The coating is approximately 1-μm thick and has only a marginal effect on the stacking factor. Traditionally, a thin coat of varnish had been applied by the transformer manufacturer after completion of cutting and punching operations. However, improvements in the quality and adherence of the steel manufacturers' coating and in the cutting tools available have eliminated the need for the second coating, and its use has been discontinued.

Guaranteed values of real power loss (in watts per kilogram) and apparent power loss (in volt-amperes per kilogram) apply to magnetization at 0° to the direction of rolling. Both real and apparent power loss increase significantly (by a factor of 3 or more) when CGO is magnetized at an angle to the direction of rolling. Under these circumstances, manufacturers' guarantees do not apply, and the transformer manufacturer must ensure that a minimum amount of core material is subject to cross-magnetization, i.e., where the flow of magnetic flux is normal to the rolling direction. The aim is to minimize the total core loss and (equally importantly) to ensure that the core temperature in the area is maintained within safe limits. CGO strip cores operate at nominal flux densities of 1.6–1.8 T. This value compares with 1.35 T used for hot-rolled steel, and it is the principal reason for the remarkable improvement achieved in the 1950s in transformer output per unit of active material. CGO steel is produced in two magnetic qualities (each having two subgrades) and up to four thicknesses (0.23, 0.27, 0.30, and 0.35 mm), giving a choice of eight different specific loss values. In addition, the designer can consider using domain-controlled Hi-B steel of higher quality, available in three thicknesses (0.23, 0.27, and 0.3 mm).

The different materials are identified by code names:

- CGO material with a thickness of 0.3 mm and a loss of 1.3 W/kg at 1.7 T and 50 Hz, or 1.72 W/kg at 1.7 T and 60 Hz, is known as M097–30N.
- Hi-B material with a thickness of 0.27 mm and a loss of 0.98 W/kg at 1.7 T and 50 Hz, or 1.3 W/kg at 1.7 T and 60 Hz, is known as M103–27P.
- Domain-controlled Hi-B material with a thickness of 0.23 mm and a loss of 0.92 W/kg at 1.7 T and 50 Hz, or 1.2 W/kg at 1.7 T and 60 Hz, is known as 23ZDKH.

The Japanese-grade ZDKH core steel is subjected to laser irradiation to refine the magnetic domains near to the surface. This process considerably reduces the anomalous eddy-current loss, but the laminations must not be annealed after cutting. An alternative route to domain control of the steel is to use plasma irradiation, whereby the laminations can be annealed after cutting.

The decision on which grade to use to meet a particular design requirement depends on the characteristics required in respect of impedance and losses and, particularly, on the cash value that the

www.EngineeringEbooksPdf.com

purchaser has assigned to core loss (the capitalized value of the iron loss). The higher labor cost involved in using the thinner materials is another factor to be considered.

No-load and load losses are often specified as target values by the user, or they may be evaluated by the "capitalization" of losses. A purchaser who receives tenders from prospective suppliers must evaluate the tenders to determine the "best" offer. The evaluation process is based on technical, strategic, and economic factors, but if losses are to be capitalized, the purchaser will always evaluate the "total cost of ownership," where:

$$\text{Cost of ownership} = \text{capital cost (or initial cost)} + \text{cost of losses}$$

$$\text{Cost of losses} = \text{cost of no-load loss} + \text{cost of load loss} + \text{cost of stray loss}$$

For loss-evaluation purposes, the load loss and stray loss are added together, as they are both current-dependent.

$$\text{Cost of no-load loss} = \text{no-load loss (kW)} \times \text{capitalization factor (\$/kW)}$$

$$\text{Cost of load loss} = \text{load loss (kW)} \times \text{capitalization factor (\$/kW)}$$

For generator transformers that are usually on continuous full load, the capitalization factors for no-load loss and load loss are usually equal. For transmission and distribution transformers, which normally operate at below their full-load rating, different capitalization factors are used depending on the planned load factor. Typical values for the capitalization rates used for transmission and distribution transformers are \$5000/kW for no-load loss and \$1200/kW for load loss. At these values, the total cost of ownership of the transformer, representing the capital cost plus the cost of power losses over 20 years, may be more than twice the capital cost. For this reason, modern designs of transformer are usually low-loss designs rather than low-cost designs.

Figure 1.4 shows the loss characteristics for a range of available electrical core-steel materials over a range of values of magnetic induction (core flux density).

The current that creates rated flux in the core is called the magnetizing current. The magnetizing circuit of the transformer can be represented by one branch in the equivalent circuit shown in Figure 1.5.

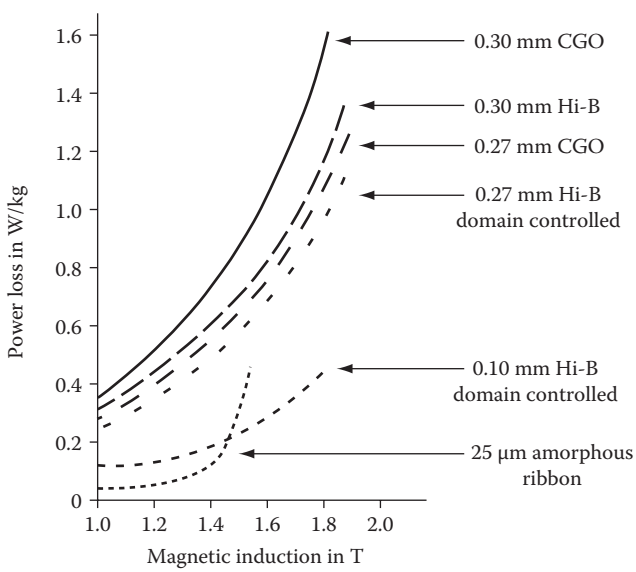

FIGURE 1.4 Loss characteristics for electrical core-steel materials over a range of magnetic induction (core flux density).

www.EngineeringEbooksPdf.com

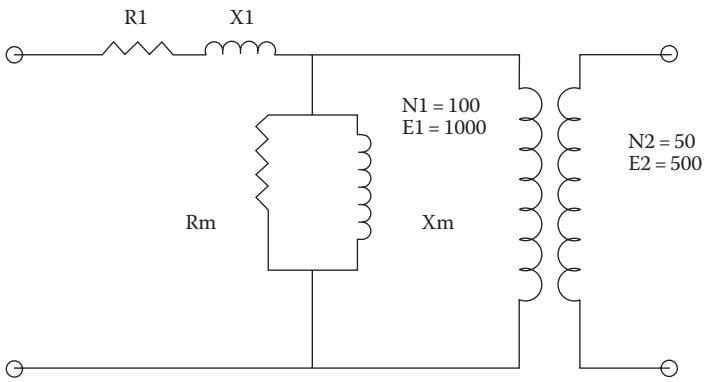

FIGURE 1.5 Equivalent circuit.

The core losses are represented by Rm and the excitation characteristics by Xm. When the magnetizing current, which is about 0.5% of the load current, flows in the primary winding, there is a small voltage drop across the resistance of the winding and a small inductive drop across the inductance of the winding. We can represent these impedances as R1 and X1 in the equivalent circuit. However, these voltage drops are very small and can be neglected in the practical case.

Since the flux flowing in all parts of the core is essentially equal, the voltage induced in any turn placed around the core will be the same. This results in the unique characteristics of transformers with steel cores. Multiple secondary windings can be placed on the core to obtain different output voltages. Each turn in each winding will have the same voltage induced in it, as seen in Figure 1.6. The ratio of the voltages at the output to the input at no-load will be equal to the ratio of the turns. The voltage drops in the resistance and reactance at no-load are very small, with only magnetizing current flowing in the windings, so that the voltage appearing across the primary winding of the equivalent circuit in Figure 1.5 can be considered to be the input voltage. The relationship E1/N1 = E2/N2 is important in transformer design and application. The term E/N is called "volts per turn."

A steel core has a nonlinear magnetizing characteristic, as shown in Figure 1.7. As shown, greater ampere-turns are required as the flux density B is increased from zero. Above the knee of the curve, as the flux approaches saturation, a small increase in the flux density requires a large increase in the

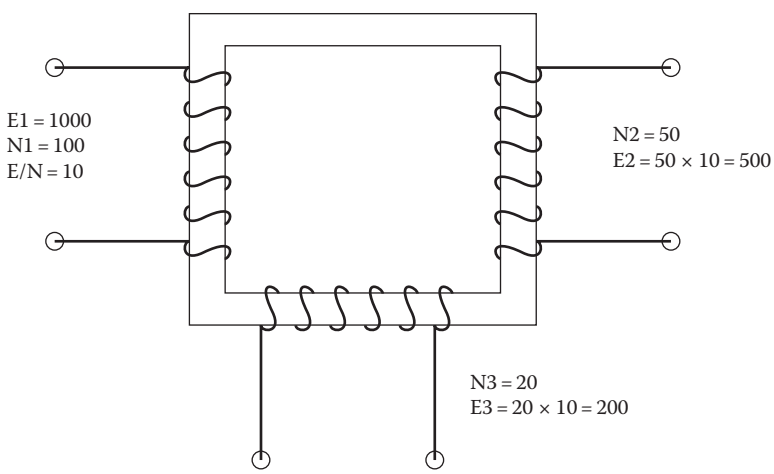

FIGURE 1.6 Steel core with windings.

www.EngineeringEbooksPdf.com

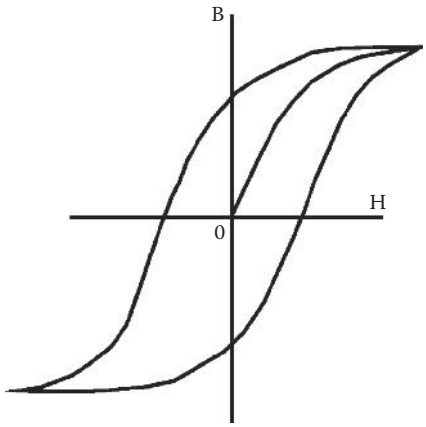

FIGURE 1.7 Hysteresis loop.

ampere-turns. When the core saturates, the circuit behaves much the same as an air core. As the flux density decreases to zero, becomes negative, and increases in a negative direction, the same phenomenon of saturation occurs. As the flux reduces to zero and increases in a positive direction, it describes a loop known as the "hysteresis loop." The area of this loop represents power loss due to the hysteresis effect in the steel. Improvements in the grade of steel result in a smaller area of the hysteresis loop and a sharper knee point where the B-H characteristic becomes nonlinear and approaches the saturated state.

1.4 The Practical Transformer

1.4.1 Magnetic Circuit

In actual transformer design, the constants for the ideal circuit are determined from tests on materials and on transformers. For example, the resistance component of the core loss, usually called no-load loss, is determined from curves derived from tests on samples of electrical steel and measured transformer no-load losses. The designer will have curves similar to Figure 1.4 for the different electrical steel grades as a function of induction. Similarly, curves have been made available for the exciting current as a function of induction.

A very important relationship is derived from Equation 1.11. It can be written in the following form:

$$B = \frac{0.225(E/N)}{(fA)} \tag{1.13}$$

The term E/N is called "volts per turn": It determines the number of turns in the windings; the flux density in the core; and is a variable in the leakage reactance, which is discussed below. In fact, when the designer starts to make a design for an operating transformer, one of the first things selected is the volts per turn.

The no-load loss in the magnetic circuit is a guaranteed value in most designs. The designer must select an induction level that will allow him to meet the guarantee. The design curves or tables usually show the loss per unit weight as a function of the material and the magnetic induction.

The induction must also be selected so that the core will be below saturation under specified overvoltage conditions. Magnetic saturation occurs at about 2.0 T in magnetic steels but at about 1.4 T in amorphous ribbon.

www.EngineeringEbooksPdf.com

1.4.2 Leakage Reactance

Additional concepts must be introduced when the practical transformer is considered. For example, the flow of load current in the windings results in high magnetic fields around the windings. These fields are termed leakage flux fields. The term is believed to have started in the early days of transformer theory, when it was thought that this flux "leaked" out of the core. This flux exists in the spaces between windings and in the spaces occupied by the windings, as seen in Figure 1.8. These flux lines effectively result in an impedance between the windings, which is termed "leakage reactance" in the industry. The magnitude of this reactance is a function of the number of turns in the windings, the current in the windings, the leakage field, and the geometry of the core and windings. The magnitude of the leakage reactance is usually in the range of 4%–20% at the base rating of power transformers.

The load current through this reactance results in a considerable voltage drop. Leakage reactance is termed "percent leakage reactance" or "percent reactance," i.e., the ratio of the reactance voltage drop to the winding voltage × 100. It is calculated by designers using the number of turns, the magnitudes of the current and the leakage field, and the geometry of the transformer. It is measured by short-circuiting one winding of the transformer and increasing the voltage on the other winding until rated current flows in the windings. This voltage divided by the rated winding voltage × 100 is the percent reactance voltage or percent reactance. The voltage drop across this reactance results in the voltage at the load being less than the value determined by the turns ratio. The percentage decrease in the voltage is termed "regulation," which is a function of the power factor of the load. The percent regulation can be determined using the following equation for inductive loads.

$$\%\text{Reg} = \%\text{R}(\cos\phi) + \%\text{X}(\sin\phi) + \left\{\frac{[\%\text{X}(\cos\phi) - \%\text{R}(\sin\phi)]^2}{200}\right\} \tag{1.14}$$

where

%Reg is the percentage voltage drop across the resistance and the leakage reactance
%R is the percentage resistance = (kW of load loss/kVA of transformer) × 100
%X is the percentage leakage reactance
ϕ is the angle corresponding to the power factor of the load = $\cos^{-1}$ pf

For capacitance loads, change the sign of the sine terms.

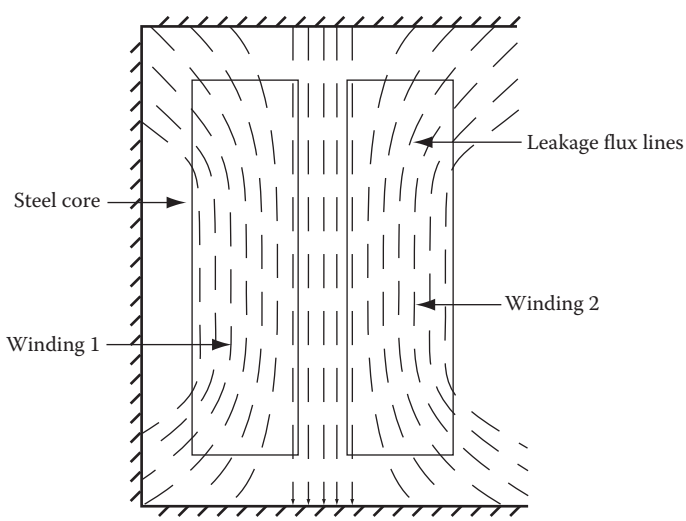

FIGURE 1.8 Leakage flux fields.

www.EngineeringEbooksPdf.com

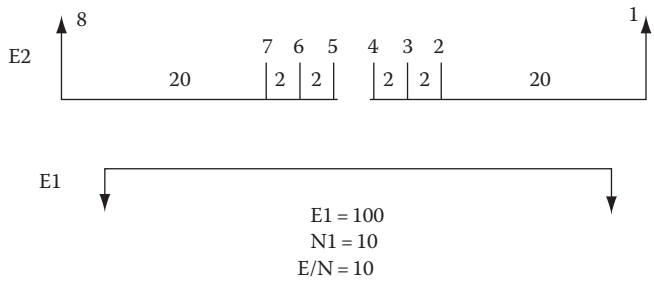

$E2 = E/N \times N2$

N2	E2
4–5 = 48	$E2 = 10 \times 48 = 480$ V
4–6 = 46	$E2 = 10 \times 46 = 460$ V
3–6 = 44	$E2 = 10 \times 44 = 440$ V
3–7 = 42	$E2 = 10 \times 42 = 420$ V
2–7 = 40	$E2 = 10 \times 40 = 400$ V

FIGURE 1.9 Illustration of how taps added in the windings can compensate for voltage drops.

In order to compensate for these voltage drops, taps are usually added in the windings. The unique volts/turn feature of steel-core transformers makes it possible to add or subtract turns to change the voltage outputs of windings. A simple illustration of this concept is shown in Figure 1.9. The table in the figure shows that when tap 4 is connected to tap 5, there are 48 turns in the winding (maximum tap) and, at 10 V/turn, the voltage E2 is 480 V. When tap 2 is connected to tap 7, there are 40 turns in the winding (minimum tap), and the voltage E2 is 400 V.

1.4.3 Load Losses

The term *load losses* represents the losses in the transformer that result from the flow of load current in the windings. Load losses are composed of the following elements.

- Resistance losses as the current flows through the resistance of the conductors and leads.
- Eddy losses caused by the leakage field. These are a function of the second power of the leakage field density and the second power of the conductor dimensions normal to the field.
- Stray losses: The leakage field exists in parts of the core, steel structural members, and tank walls. Losses and heating result in these steel parts.

Again, the leakage field caused by flow of the load current in the windings is involved, and the eddy and stray losses can be appreciable in large transformers. In order to reduce load loss, it is not sufficient to reduce the winding resistance by increasing the cross-section of the conductor, as eddy losses in the conductor will increase faster than joule heating losses decrease. When the current is too great for a single conductor to be used for the winding without excessive eddy loss, a number of strands must be used in parallel. Because the parallel components are joined at the ends of the coil, steps must be taken to circumvent the induction of different electromotive force (EMFs) in the strands due to different loops of strands linking with the leakage flux, which would involve circulating currents and further loss. Different forms of conductor transposition have been devised for this purpose.

Ideally, each conductor element should occupy every possible position in the array of strands such that all elements have the same resistance and the same induced EMF. Conductor transposition, however, involves some sacrifice of winding space. If the winding depth is small, one transposition halfway

www.EngineeringEbooksPdf.com

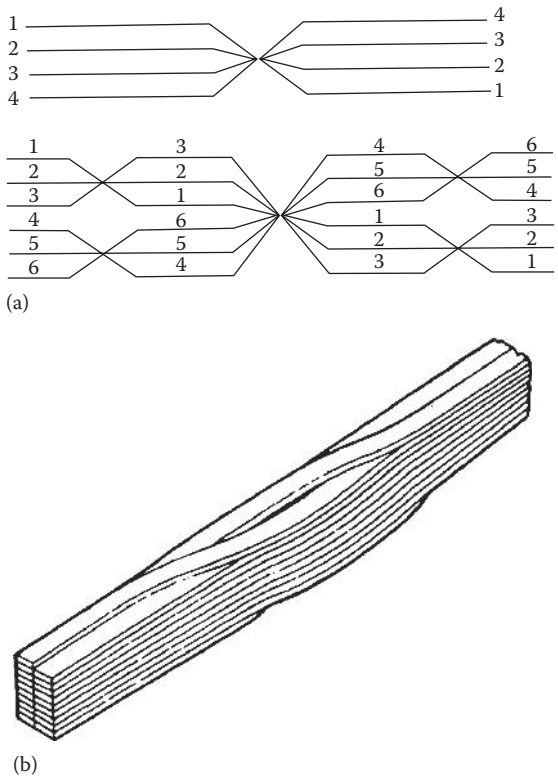

FIGURE 1.10 CTC cable. (a) Forms of transposition. (b) Continuously transposed conductor.

through the winding is sufficient; or in the case of a two-layer winding, the transposition can be located at the junction of the layers. Windings of greater depth need three or more transpositions. An example of a continuously transposed conductor (CTC) cable, shown in Figure 1.10, is widely used in the industry. CTC cables are manufactured using transposing machines and are usually paper-insulated as part of the transposing operation.

Stray losses can be a constraint on high-reactance designs. Losses can be controlled by using a combination of magnetic shunts and/or conducting shields to channel the flow of leakage flux external to the windings into low-loss paths.

1.4.4 Short-Circuit Forces

Forces exist between current-carrying conductors when they are in an alternating-current field. These forces are determined using Equation 1.15:

$$F = BI\sin\theta \tag{1.15}$$

where

F is the force on conductor

B is the local leakage flux density

θ is the angle between the leakage flux and the load current. In transformers, sin θ is almost always equal to 1

www.EngineeringEbooksPdf.com

Thus

$$B = \mu I \tag{1.16}$$

and therefore

$$F \propto I^2 \tag{1.17}$$

Since the leakage flux field is between windings and has a rather high density, the forces under short-circuit conditions can be quite high. This is a special area of transformer design. Complex computer programs are needed to obtain a reasonable representation of the field in different parts of the windings. Considerable research activity has been directed toward the study of mechanical stresses in the windings and the withstand criteria for different types of conductors and support systems.

Between any two windings in a transformer, there are three possible sets of forces:

1. Radial repulsion forces due to currents flowing in opposition in the two windings
2. Axial repulsion forces due to currents in opposition when the electromagnetic centers of the two windings are not aligned
3. Axial compression forces in each winding due to currents flowing in the same direction in adjacent conductors

The most onerous forces are usually radial between windings. Outer windings rarely fail from hoop stress, but inner windings can suffer from one or the other of two failure modes:

1. Forced buckling, where the conductor between support sticks collapses due to inward bending into the oil-duct space
2. Free buckling, where the conductors bulge outwards as well as inwards at a few specific points on the circumference of the winding

Forced buckling can be prevented by ensuring that the winding is tightly wound and is adequately supported by packing it back to the core. Free buckling can be prevented by ensuring that the winding is of sufficient mechanical strength to be self-supporting, without relying on packing back to the core.

1.4.5 Thermal Considerations

The losses in the windings and the core cause temperature rises in the materials. This is another important area in which the temperatures must be limited to the long-term capability of the insulating materials. Refined paper is still used as the primary solid insulation in power transformers. Highly refined mineral oil is still used as the cooling and insulating medium in power transformers. Gases and vapors have been introduced in a limited number of special designs. The temperatures must be limited to the thermal capability of these materials. Again, this subject is quite broad and involved. It includes the calculation of the temperature rise of the cooling medium, the average and hottest-spot rise of the conductors and leads, and accurate specification of the heat-exchanger equipment.

1.4.6 Voltage Considerations

A transformer must withstand a number of different normal and abnormal voltage stresses over its expected life. These voltages include:

- Operating voltages at the rated frequency
- Rated-frequency overvoltages
- Natural lightning impulses that strike the transformer or transmission lines

www.EngineeringEbooksPdf.com

- Switching surges that result from opening and closing of breakers and switches
- Combinations of the above voltages
- Transient voltages generated due to resonance between the transformer and the network
- Fast transient voltages generated by vacuum-switch operations or by the operation of disconnect switches in a gas-insulated bus-bar system

This is a very specialized field in which the resulting voltage stresses must be calculated in the windings, and withstand criteria must be established for the different voltages and combinations of voltages. The designer must design the insulation system to withstand all of these stresses.

Bibliography

Kan, H., Problems related to cores of transformers and reactors, *Electra*, 94, 15–33, 1984.

www.EngineeringEbooksPdf.com

www.EngineeringEbooksPdf.com

2

Power Transformers

2.1 Introduction **2**-1
2.2 Rating and Classifications **2**-2
Rating • Insulation Classes • Cooling Classes
2.3 Short-Circuit Duty **2**-4
2.4 Efficiency, Losses, and Regulation **2**-6
Efficiency • Losses • Economic Evaluation of Losses • Regulation
2.5 Construction **2**-8
Core • Windings • Taps-Turns Ratio Adjustment
2.6 Accessory Equipment **2**-19
Accessories • Liquid-Preservation Systems
2.7 Inrush Current **2**-21
2.8 Transformers Connected Directly to Generators **2**-21
2.9 Modern and Future Developments **2**-22
Bibliography **2**-23

H. Jin Sim
Waukesha Electric Systems

Scott H. Digby
Progress Energy

2.1 Introduction

ANSI/IEEE defines a transformer as a static electrical device, involving no continuously moving parts, used in electric power systems to transfer power between circuits through the use of electromagnetic induction. The term *power transformer* is used to refer to those transformers used between the generator and the distribution circuits, and these are usually rated at 500 kVA and above. Power systems typically consist of a large number of generation locations, distribution points, and interconnections within the system or with nearby systems, such as a neighboring utility. The complexity of the system leads to a variety of transmission and distribution voltages. Power transformers must be used at each of these points where there is a transition between voltage levels.

Power transformers are selected based on the application, with the emphasis toward custom design being more apparent the larger the unit. Power transformers are available for step-up operation, primarily used at the generator and referred to as generator step-up (GSU) transformers, and for step-down operation, mainly used to feed distribution circuits. Power transformers are available as single-phase or three-phase apparatus.

The construction of a transformer depends upon the application. Transformers intended for indoor use are primarily of the dry type but can also be liquid immersed. For outdoor use, transformers are usually liquid immersed. This section focuses on the outdoor, liquid-immersed transformers, such as those shown in Figure 2.1.

www.EngineeringEbooksPdf.com

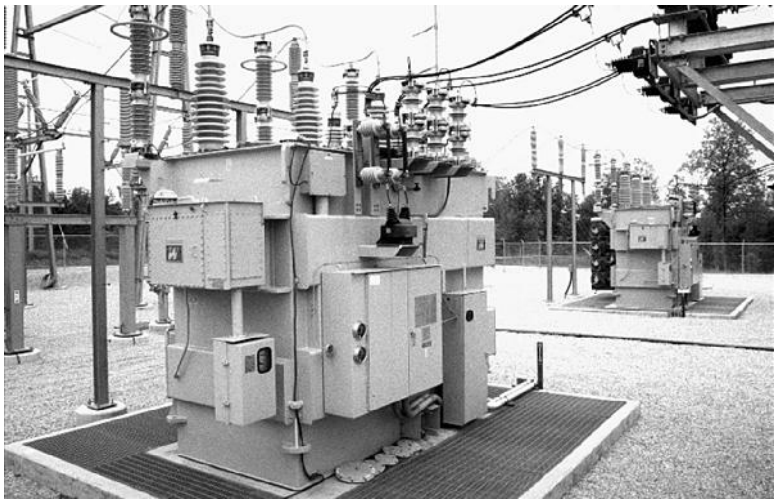

FIGURE 2.1 20 MVA, 161:26.4 × 13.2 kV with LTC, three-phase transformers.

2.2 Rating and Classifications

2.2.1 Rating

In the United States, transformers are rated based on the power output they are capable of delivering continuously at a specified rated voltage and frequency under "usual" operating conditions without exceeding prescribed internal temperature limitations. Insulation is known to deteriorate with increases in temperature, so the insulation chosen for use in transformers is based on how long it can be expected to last by limiting the operating temperature. The temperature that insulation is allowed to reach under operating conditions essentially determines the output rating of the transformer, called the kilovolt-ampere rating. Standardization has led to temperatures within a transformer being expressed in terms of the rise above ambient temperature, since the ambient temperature can vary under operating or test conditions. Transformers are designed to limit the temperature based on the desired load, including the average temperature rise of a winding, the hottest-spot temperature rise of a winding, and, in the case of liquid-filled units, the top-liquid temperature rise. To obtain absolute temperatures from these values, simply add the ambient temperature. Standard temperature limits for liquid-immersed power transformers are listed in Table 2.1.

The normal life expectancy of a power transformer is generally assumed to be about 30 years of service when operated within its rating. However, under certain conditions, it may be overloaded and operated beyond its rating, with moderately predictable "loss of life." Situations that might involve operation beyond rating include emergency rerouting of load or through-faults prior to clearing of the fault condition.

Outside the United States, the transformer rating may have a slightly different meaning. Based on some standards, the kilovolt-ampere rating can refer to the power that can be input to a transformer, the rated output being equal to the input minus the transformer losses.

TABLE 2.1 Standard Limits for Temperature Rises above Ambient

Average Winding Temperature Rise	65°C[a]
Hot-spot temperature rise	80°C
Top-liquid temperature rise	65°C

[a] The base rating is frequently specified and tested as a 55°C rise.

www.EngineeringEbooksPdf.com

Power transformers have been loosely grouped into three market segments based on size ranges. These three segments are as follows:

1. Small power transformers: 500–7500 kVA
2. Medium power transformers: 7500 kVA–100 MVA
3. Large power transformers: 100 MVA and above

Note that the upper range of small power and the lower range of medium power can vary between 2,500 and 10,000 kVA throughout the industry.

It was noted that the transformer rating is based on "usual" service conditions, as prescribed by standards. Unusual service conditions may be identified by those specifying a transformer so that the desired performance will correspond to the actual operating conditions. Unusual service conditions include, but are not limited to, the following: high (above 40°C) or low (below –20°C) ambient temperatures, altitudes above 1000 m above sea level, seismic conditions, and loads with total harmonic distortion above 0.05 per unit.

2.2.2 Insulation Classes

The insulation class of a transformer is determined based on the test levels that it is capable of withstanding. Transformer insulation is rated by the BIL, or basic impulse insulation level, in conjunction with the voltage rating. Internally, a transformer is considered to be a non-self-restoring insulation system, mostly consisting of porous, cellulose material impregnated by the liquid insulating medium. Externally, the transformer's bushings and, more importantly, the surge-protection equipment must coordinate with the transformer rating to protect the transformer from transient overvoltages and surges. Standard insulation classes have been established by standards organizations stating the parameters by which tests are to be performed.

Wye-connected windings in a three-phase power transformer will typically have the common point brought out of the tank through a neutral bushing. (See Chapter 3 for a discussion of wye connections.) Depending on the application—for example, in the case of a solidly grounded neutral versus a neutral grounded through a resistor or reactor or even an ungrounded neutral—the neutral may have a lower insulation class than the line terminals. There are standard guidelines for rating the neutral based on the situation. It is important to note that the insulation class of the neutral may limit the test levels of the line terminals for certain tests, such as the applied-voltage or "hi-pot" test, where the entire circuit is brought up to the same voltage level. A reduced voltage rating for the neutral can significantly reduce the cost of larger units and autotransformers compared with a fully rated neutral.

2.2.3 Cooling Classes

Since no transformer is truly an "ideal" transformer, each will incur a certain amount of energy loss, mainly that which is converted to heat. Methods of removing this heat can depend on the application, the size of the unit, and the amount of heat that needs to be dissipated.

The insulating medium inside a transformer, usually oil, serves multiple purposes: first to act as an insulator and second to provide a good medium through which to remove the heat.

The windings and core are the primary sources of heat, although internal metallic structures can act as a heat source as well. It is imperative to have proper cooling ducts and passages in the proximity of the heat sources through which the cooling medium can flow so that the heat can be effectively removed from the transformer. The natural circulation of oil through a transformer through convection has been referred to as a "thermosiphon" effect. The heat is carried by the insulating medium until it is transferred through the transformer tank wall to the external environment. Radiators, typically detachable, provide an increase in the surface area available for heat transfer by convection without increasing the size of the tank. In smaller transformers, integral tubular sides or fins are used to provide this increase

www.EngineeringEbooksPdf.com

TABLE 2.2 Cooling Class Letter Description

		Code Letter	Description
Internal	First letter (cooling medium)	O	Liquid with flash point less than or equal to 300°C
		K	Liquid with flash point greater than 300°C
		L	Liquid with no measurable flash point
	Second letter (cooling mechanism)	N	Natural convection through cooling equipment and windings
		F	Forced circulation through cooling equipment, natural convection in windings
		D	Forced circulation through cooling equipment, directed flow in main windings
External	Third letter (cooling medium)	A	Air
		W	Water
	Fourth letter (cooling medium)	N	Natural convection
		F	Forced circulation

in surface area. Fans can be installed to increase the volume of air moving across the cooling surfaces, thus increasing the rate of heat dissipation. Larger transformers that cannot be effectively cooled using radiators and fans rely on pumps that circulate oil through the transformer and through external heat exchangers, or coolers, which can use air or water as a secondary cooling medium.

Allowing liquid to flow through the transformer windings by natural convection is identified as "non-directed flow." In cases where pumps are used, and even some instances where only fans and radiators are being used, the liquid is often guided into and through some or all of the windings. This is called "directed flow" in that there is some degree of control of the flow of the liquid through the windings. The difference between directed and nondirected flow through the winding in regard to winding arrangement will be further discussed with the description of winding types (see Section 2.5.2).

The use of auxiliary equipment such as fans and pumps with coolers, called forced circulation, increases the cooling and thereby the rating of the transformer without increasing the unit's physical size. Ratings are determined based on the temperature of the unit as it coordinates with the cooling equipment that is operating. Usually, a transformer will have multiple ratings corresponding to multiple stages of cooling, as the supplemental cooling equipment can be set to run only at increased loads.

Methods of cooling for liquid-immersed transformers have been arranged into cooling classes identified by a four-letter designation as follows:

Table 2.2 lists the code letters that are used to make up the four-letter designation.

This system of identification has come about through standardization between different international standards organizations and represents a change from what has traditionally been used in the United States. Where OA classified a transformer as liquid-immersed self-cooled in the past, it is now designated by the new system as ONAN. Similarly, the previous FA classification is now identified as ONAF. FOA could be OFAF or ODAF, depending on whether directed oil flow is employed or not. In some cases, there are transformers with directed flow in windings without forced circulation through cooling equipment.

An example of multiple ratings would be ONAN/ONAF/ONAF, where the transformer has a base rating where it is cooled by natural convection and two supplemental ratings where groups of fans are turned on to provide additional cooling so that the transformer will be capable of supplying additional kilovolt-amperes. This rating would have been designated OA/FA/FA per past standards.

2.3 Short-Circuit Duty

A transformer supplying a load current will have a complicated network of internal forces acting on and stressing the conductors, support structures, and insulation structures. These forces are fundamental to the interaction of current-carrying conductors within magnetic fields involving an alternating-current source.

www.EngineeringEbooksPdf.com

Increases in current result in increases in the magnitude of the forces proportional to the square of the current. Severe overloads, particularly through-fault currents resulting from external short-circuit events, involve significant increases in the current above rated current and can result in tremendous forces inside the transformer.

Since the fault current is a transient event, it will have the asymmetrical sinusoidal waveshape decaying with time based on the time constant of the equivalent circuit that is characteristic of switching events. The amplitude of the symmetrical component of the sine wave is determined from the formula

$$I_{sc} = \frac{I_{rated}}{(Z_{xfmr} + Z_{sys})} \tag{2.1}$$

where

Z_{xfmr} and Z_{sys} are the transformer and system impedances, respectively, expressed in terms of per unit on the transformer base

I_{sc} and I_{rated} are the resulting short-circuit (through-fault) current and the transformer rated current, respectively

An offset factor, K, multiplied by I_{sc} determines the magnitude of the first peak of the transient asymmetrical current. This offset factor is derived from the equivalent transient circuit. However, standards give values that must be used based on the ratio of the effective ac (alternating current) reactance (x) and resistance (r), x/r. K typically varies in the range of 1.5–2.8.

As indicated by Equation 2.1, the short-circuit current is primarily limited by the internal impedance of the transformer, but it may be further reduced by impedances of adjacent equipment, such as current-limiting reactors or by system power-delivery limitations. Existing standards define the maximum magnitude and duration of the fault current based on the rating of the transformer.

The transformer must be capable of withstanding the maximum forces experienced at the first peak of the transient current as well as the repeated pulses at each of the subsequent peaks until the fault is cleared or the transformer is disconnected. The current will experience two peaks per cycle, so the forces will pulsate at 120 Hz, twice the power frequency, acting as a dynamic load. Magnitudes of forces during these situations can range from several hundred kilograms to hundreds of thousands of kilograms in large power transformers. For analysis, the forces acting on the windings are generally broken up into two subsets, radial and axial forces, based on their apparent effect on the windings. Figure 2.2 illustrates the difference between radial and axial forces in a pair of circular windings. Mismatches of ampere-turns between windings are unavoidable—caused by such occurrences as ampere-turn voids created by sections of a winding being tapped out, slight mismatches in the lengths of respective windings, or misalignment of the magnetic centers of the respective windings—and result in a net axial force. This net axial force will have the effect of trying to force one winding in the upward direction and the other in the downward direction, which must be resisted by the internal mechanical structures.

The high currents experienced during through-fault events will also cause elevated temperatures in the windings. Limitations are also placed on the calculated temperature the conductor may reach during fault conditions. These high temperatures are rarely a problem due to the short time span of these events, but the transformer may experience an associated increase in its "loss of life." This additional "loss of life" can become more prevalent, even critical, based on the duration of the fault conditions and how often such events occur. It is also possible for the conductor to experience changes in mechanical strength due to the annealing that can occur at high temperatures. The temperature at which this can occur depends on the properties and composition of the conductor material, such as the hardness, which is sometimes increased through cold-working processes and the annealing retarded by the presence of silver in certain alloys.

www.EngineeringEbooksPdf.com

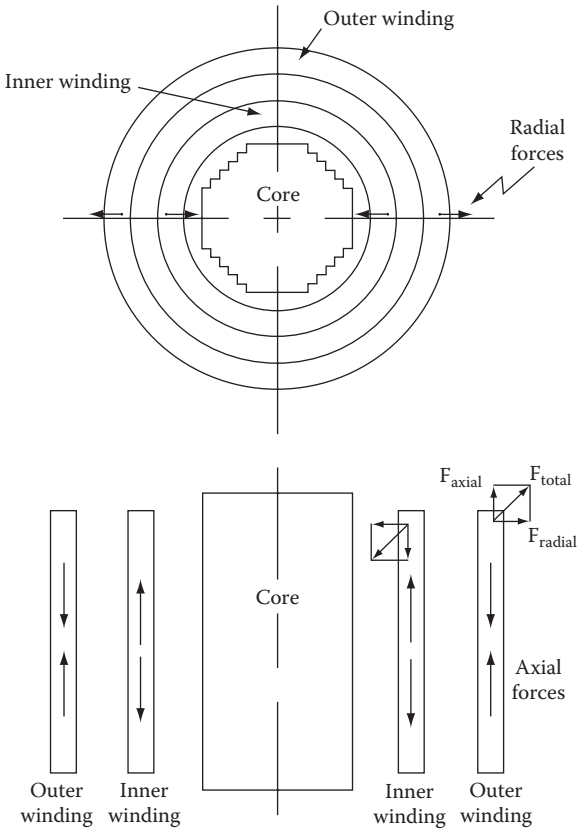

FIGURE 2.2 Radial and axial forces in a transformer winding.

2.4 Efficiency, Losses, and Regulation

2.4.1 Efficiency

Power transformers are very efficient, typically 99.5% or greater, i.e., real power losses are usually less than 0.5% of the kilovolt-ampere rating at full load. The efficiency is derived from the rated output and the losses incurred in the transformer. The basic relationship for efficiency is the output over the input, which according to U.S. standards translates to

$$\text{Efficiency} = \left[\frac{\text{kVA rating}}{(\text{kVA rating} + \text{total losses})}\right] \times 100\% \tag{2.2}$$

and generally decreases slightly with increases in load. Total losses are the sum of the no-load and load losses.

2.4.2 Losses

The no-load losses are essentially the power required to keep the core energized. These are commonly referred to as "core losses," and they exist whenever the unit is energized. No-load losses depend primarily upon the voltage and frequency, so under operational conditions they vary only slightly with system variations. Load losses, as the terminology might suggest, result from load currents flowing through the transformer. The two components of the load losses are the I^2R losses and the stray losses. I^2R losses are based

www.EngineeringEbooksPdf.com

on the measured dc (direct current) resistance, the bulk of which is due to the winding conductors and the current at a given load. The stray losses are a term given to the accumulation of the additional losses experienced by the transformer, which includes winding eddy losses and losses due to the effects of leakage flux entering internal metallic structures. Auxiliary losses refer to the power required to run auxiliary cooling equipment, such as fans and pumps, and are not typically included in the total losses as defined earlier.

2.4.3 Economic Evaluation of Losses

Transformer losses represent power that cannot be delivered to customers and therefore have an associated economic cost to the transformer user/owner. A reduction in transformer losses generally results in an increase in the transformer's cost. Depending on the application, there may be an economic benefit to a transformer with reduced losses and high price (initial cost), and vice versa. This process is typically dealt with through the use of "loss evaluations," which place a dollar value on the transformer losses to calculate a total owning cost that is a combination of the purchase price and the losses. Typically, each of the transformer's individual loss parameters—no-load losses, load losses, and auxiliary losses—is assigned a dollar value per kilowatt ($/kW). Information obtained from such an analysis can be used to compare prices from different manufacturers or to decide on the optimum time to replace existing transformers. There are guides available, through standards organizations, for estimating the cost associated with transformers losses. Loss-evaluation values can range from about $500/kW to upwards of $12,000/kW for the no-load losses and from a few hundred dollars per kilowatt to about $6,000 to $8,000/kW for load losses and auxiliary losses. Specific values depend upon the application.

2.4.4 Regulation

Regulation is defined as the change (increase) in the output voltage that occurs when the load on the transformer is reduced from rated load to no load while the input voltage is held constant. It is typically expressed as a percentage, or per unit, of the rated output voltage at rated load. A general expression for the regulation can be written as follows:

$$\%\,\text{regulation} = \left[\frac{(V_{NL} - V_{FL})}{V_{FL}}\right] \times 100 \tag{2.3}$$

where

V_{NL} is the voltage at no load
V_{FL} is the voltage at full load

The regulation is dependent upon the impedance characteristics of the transformer, the resistance (r), and more significantly the ac reactance (x), as well as the power factor of the load. The regulation can be calculated based on the transformer impedance characteristics and the load power factor using the following formulas:

$$\%\,\text{regulation} = pr + qx + \left[\frac{(px - qr)^2}{200}\right] \tag{2.4}$$

$$q = \text{SQRT}(1 - p^2) \tag{2.5}$$

where

p is the power factor of the load
r and x are expressed in terms of per unit on the transformer base

www.EngineeringEbooksPdf.com

The value of q is taken to be positive for a lagging (inductive) power factor and negative for a leading (capacitive) power factor.

It should be noted that lower impedance values, specifically ac reactance, result in lower regulation, which is generally desirable. However, this is at the expense of the fault current, which would in turn increase with a reduction in impedance, since it is primarily limited by the transformer impedance. Additionally, the regulation increases as the power factor of the load becomes more lagging (inductive).

2.5 Construction

The construction of a power transformer varies throughout the industry. The basic arrangement is essentially the same and has seen little significant change in recent years, so some of the variations can be discussed here.

2.5.1 Core

The core, which provides the magnetic path to channel the flux, consists of thin strips of high-grade steel, called laminations, which are electrically separated by a thin coating of insulating material. The strips can be stacked or wound, with the windings either built integrally around the core or built separately and assembled around the core sections. Core steel can be hot- or cold- rolled, grain-oriented or non-grain-oriented, and even laser-scribed for improved performance. Thickness ranges from 0.23 mm to upwards of 0.36 mm. The core cross section can be circular or rectangular, with circular cores commonly referred to as cruciform construction. Rectangular cores are used for smaller ratings and as auxiliary transformers used within a power transformer. Rectangular cores use a single width of strip steel, while circular cores use a combination of different strip widths to approximate a circular cross section, such as in Figure 2.2. The type of steel and arrangement depends on the transformer rating as related to cost factors such as labor and performance.

Just like other components in the transformer, the heat generated by the core must be adequately dissipated. While the steel and coating may be capable of withstanding higher temperatures, it will come in contact with insulating materials with limited temperature capabilities. In larger units, cooling ducts are used inside the core for additional convective surface area, and sections of laminations may be split to reduce localized losses.

The core is held together by, but insulated from, mechanical structures and is grounded to a single point in order to dissipate electrostatic buildup. The core ground location is usually some readily accessible point inside the tank, but it can also be brought through a bushing on the tank wall or top for external access. This grounding point should be removable for testing purposes, such as checking for unintentional core grounds. Multiple core grounds, such as a case whereby the core is inadvertently making contact with otherwise grounded internal metallic mechanical structures, can provide a path for circulating currents induced by the main flux as well as a leakage flux, thus creating concentrations of losses that can result in localized heating.

The maximum flux density of the core steel is normally designed as close to the knee of the saturation curve as practical, accounting for required overexcitations and tolerances that exist due to materials and manufacturing processes. (See Chapter 7 for a discussion of saturation curves.) For power transformers, the flux density is typically between 1.3 and 1.8 T, with the saturation point for magnetic steel being around 2.03–2.05 T.

There are two basic types of core construction used in power transformers: core-form and shell-form.

In core-form construction, there is a single path for the magnetic circuit. Figure 2.3 shows a schematic of a single-phase core, with the arrows showing the magnetic path. For single-phase applications, the windings are typically divided on both core legs as shown. In three-phase applications, the windings of a particular phase are typically on the same core leg, as illustrated in Figure 2.4. Windings are

www.EngineeringEbooksPdf.com

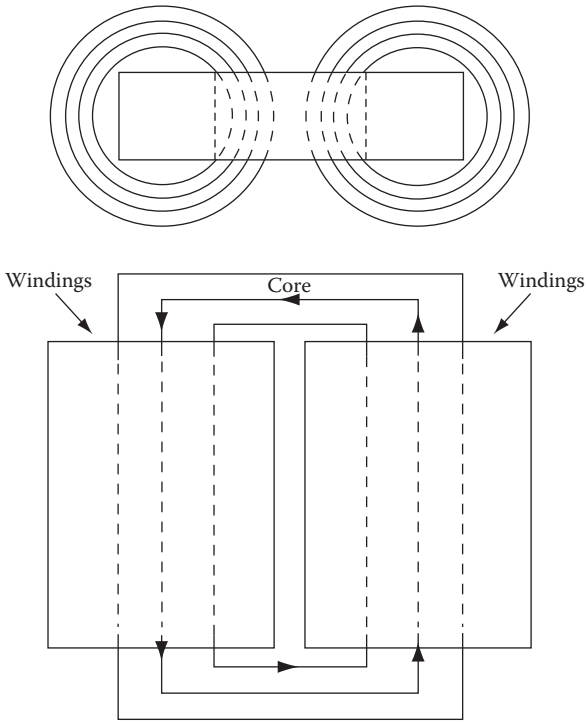

FIGURE 2.3 Schematic of single-phase core-form construction.

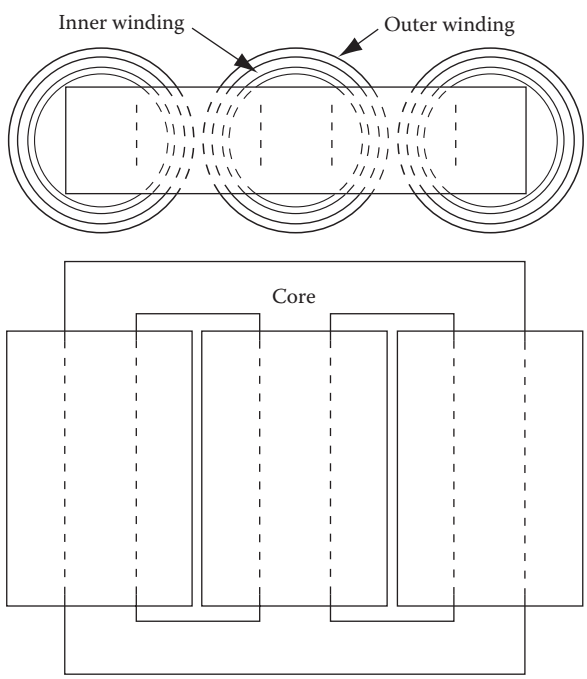

FIGURE 2.4 Schematic of three-phase core-form construction.

www.EngineeringEbooksPdf.com

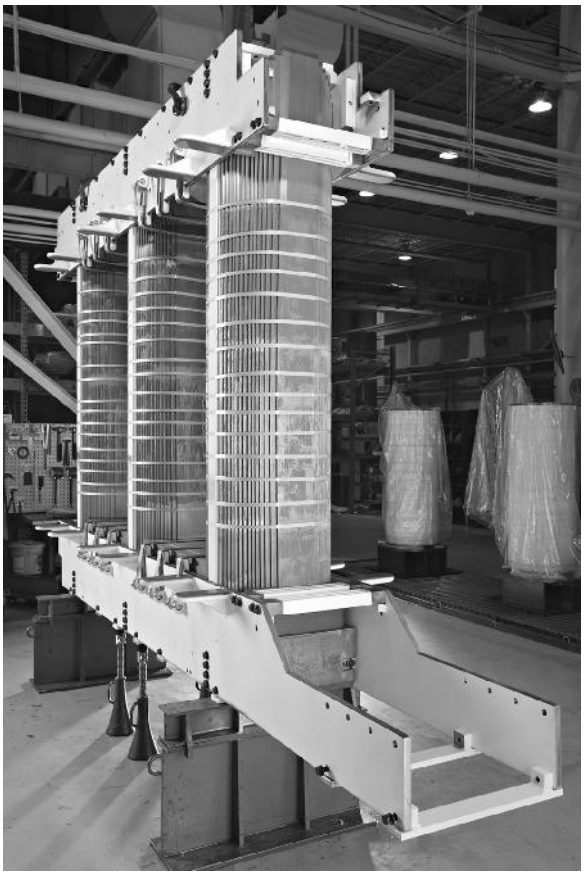

FIGURE 2.5 "E" assembly prior to addition of coils and insertion of top yoke.

constructed separate of the core and placed on their respective core legs during core assembly. Figure 2.5 shows what is referred to as the "E" assembly of a three-phase core-form core during assembly.

In shell-form construction, the core provides multiple paths for the magnetic circuit. Figure 2.6 is a schematic of a single-phase shell-form core, with the two magnetic paths illustrated. The core is typically stacked directly around the windings, which are usually "pancake"-type windings, although some applications are such that the core and windings are assembled similar to core form. Due to advantages associated with not having to bring leads out through other windings, i.e., not concentrically arranged windings as in the core form transformers, shell forms tend to be used more frequently for high-current applications and for certain reconnectable winding applications (for cases requiring accommodations to make certain ratio adjustments). Variations of three-phase shell-form construction include five- and seven-legged cores, depending on size and application.

2.5.2 Windings

The windings consist of the current-carrying conductors wound around the sections of the core, and these must be properly insulated, supported, and cooled to withstand operational and test conditions. The terms *winding* and *coil* are used interchangeably in this discussion.

Copper and aluminum are the primary materials used as conductors in power-transformer windings. While aluminum is lighter and generally less expensive than copper, a larger cross section of aluminum

www.EngineeringEbooksPdf.com

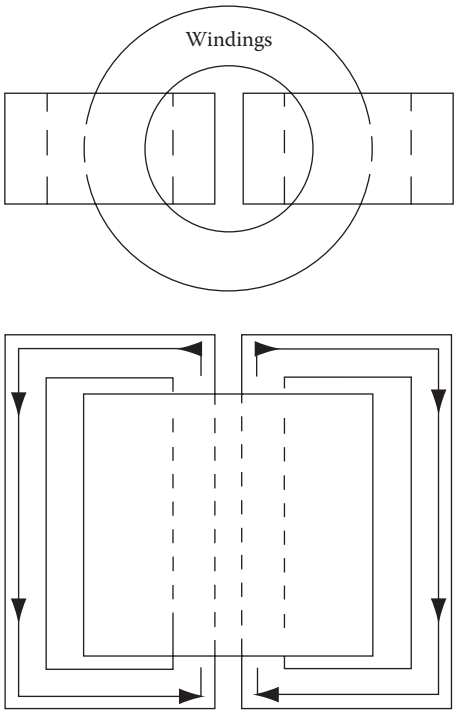

FIGURE 2.6 Schematic of single-phase shell-form construction.

conductor must be used to carry a current with similar performance as copper. Copper has higher mechanical strength and is used almost exclusively in all but the smaller size ranges, where aluminum conductors may be perfectly acceptable. In cases where extreme forces are encountered, copper can be cold worked for even greater strength often with a small amount of silver added to retard the annealing so that this strength is maintained throughout the service life of the transformer. The conductors used in power transformers are typically stranded with a rectangular cross section, although some transformers at the lowest ratings may use sheet or foil conductors. Multiple strands can be wound in parallel and joined together at the ends of the winding, in which case it is necessary to transpose the strands at various points throughout the winding to prevent circulating currents around the loop(s) created by joining the strands at the ends. Individual strands may be subjected to differences in the flux field due to their respective positions within the winding, which create differences in voltages between the strands and drive circulating currents through the conductor loops. Proper transposition of the strands cancels out these voltage differences and eliminates or greatly reduces the circulating currents. A variation of this technique, involving many rectangular conductor strands combined into a cable, is called continuously transposed cable (CTC), as shown in Figure 2.7.

In core-form transformers, the windings are usually arranged concentrically around the core leg, as illustrated in Figure 2.8, which shows a winding being lowered over another winding already on the core leg of a three-phase transformer. A schematic of coils arranged in this three-phase application was also shown in Figure 2.4. Shell-form transformers use an interleaved arrangement, as illustrated in the schematic Figure 2.9 and the photograph in Figure 2.13. With an interleaved arrangement, individual coils are stacked, separated by insulating barriers and cooling ducts. The coils are typically connected with the inside of one coil connected to the inside of an adjacent coil and, similarly, the outside of one coil connected to the outside of an adjacent coil. Sets of coils are assembled into groups, which then form the primary or secondary winding.

www.EngineeringEbooksPdf.com

FIGURE 2.7 Continuously transposed cable.

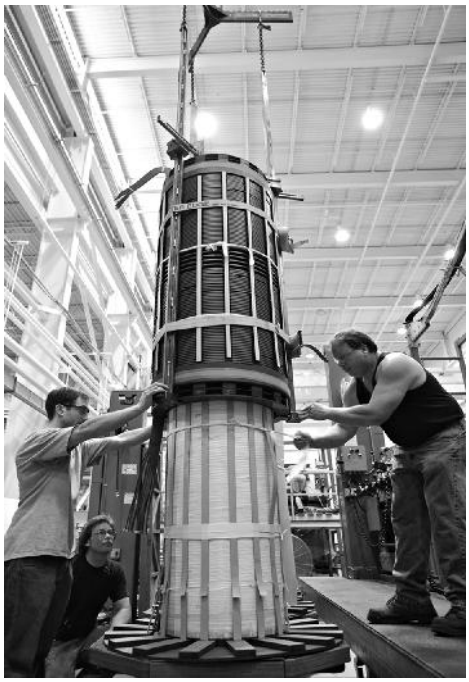

FIGURE 2.8 Concentric arrangement, outer coil being lowered onto core leg over top of inner coil.

When considering concentric windings, it is generally understood that circular windings have inherently higher mechanical strength than rectangular windings, whereas rectangular coils can have lower associated material and labor costs. Rectangular windings permit a more efficient use of space, but their use is limited to small power transformers and the lower range of medium-power transformers, where the internal forces are not extremely high. As the rating increases, the forces significantly increase, and there is need for added strength in the windings, so circular coils, or shell-form construction, are used. In some special cases, elliptically shaped windings are used.

www.EngineeringEbooksPdf.com

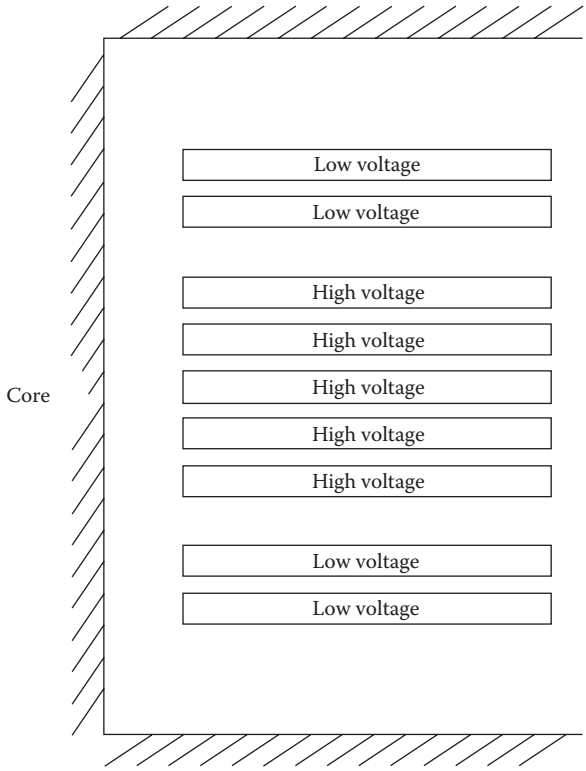

FIGURE 2.9 Example of stacking (interleaved) arrangement of windings in shell-form construction.

Concentric coils are typically wound over cylinders with spacers attached so as to form a duct between the conductors and the cylinder. As previously mentioned, the flow of liquid through the windings can be based solely on natural convection, or the flow can be somewhat controlled through the use of strategically placed barriers within the winding. Figures 2.10 and 2.11 show winding arrangements comparing nondirected and directed flow. This concept is sometimes referred to as guided liquid flow.

A variety of different types of windings have been used in power transformers through the years. Coils can be wound in an upright, vertical orientation, as is necessary with larger, heavier coils, or they can be wound horizontally and placed upright upon completion. As mentioned previously, the type of winding depends on the transformer rating as well as the core construction. Several of the more common winding types are discussed here.

2.5.2.1 Pancake Windings

Several types of windings are commonly referred to as "pancake" windings due to the arrangement of conductors into discs. However, the term most often refers to a coil type that is used almost exclusively in shell-form transformers. The conductors are wound around a rectangular form, with the widest face of the conductor oriented either horizontally or vertically. Figure 2.12 illustrates how these coils are typically wound. This type of winding lends itself to the interleaved arrangement previously discussed (Figure 2.13).

2.5.2.2 Layer (Barrel) Windings

Layer (barrel) windings are among the simplest of windings in that the insulated conductors are wound directly next to each other around the cylinder and spacers. Several layers can be wound on top of one another, with the layers separated by solid insulation, ducts, or a combination. Several strands can be wound in parallel if the current magnitude so dictates. Variations of this winding are often used for

www.EngineeringEbooksPdf.com

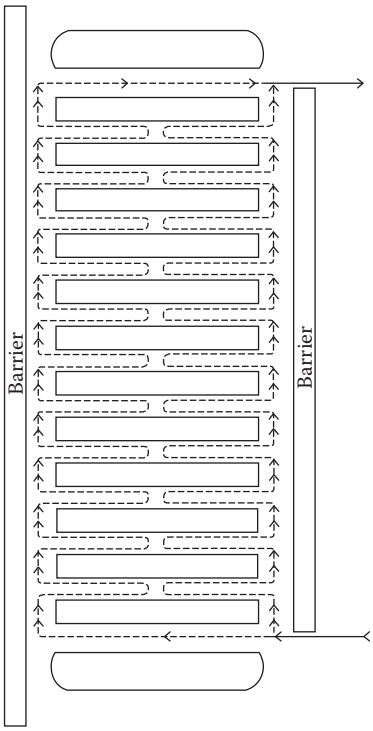

FIGURE 2.10 Nondirected flow.

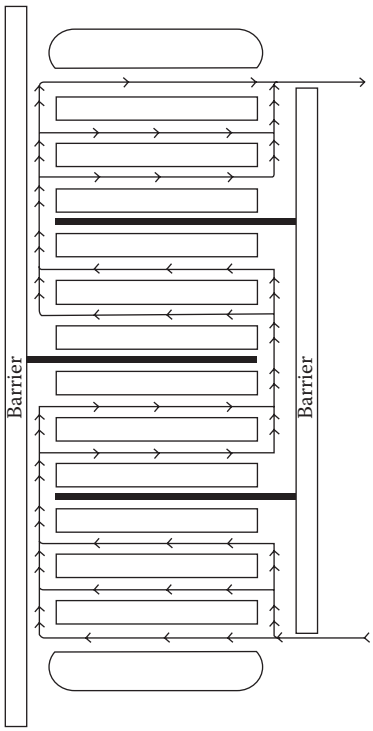

FIGURE 2.11 Directed flow.

www.EngineeringEbooksPdf.com

FIGURE 2.12 Pancake winding during winding process.

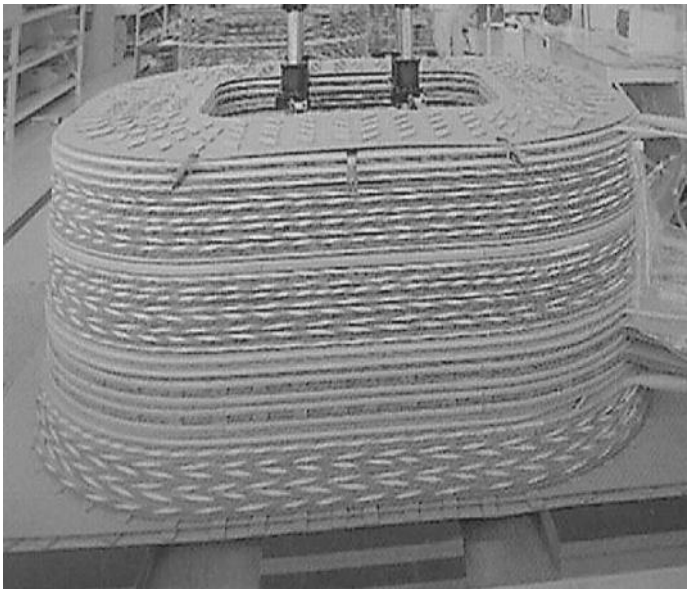

FIGURE 2.13 Stacked pancake windings.

applications such as tap windings used in load-tap-changing (LTC) transformers and for tertiary windings used for, among other things, third-harmonic suppression. Figure 2.14 shows a layer winding during assembly that will be used as a regulating winding in an LTC transformer.

2.5.2.3 Helical Windings

Helical windings are also referred to as screw or spiral windings, with each term accurately characterizing the coil's construction. A helical winding consists of a few to more than 100 insulated strands wound in parallel continuously along the length of the cylinder, with spacers inserted between adjacent turns or discs and suitable transpositions included to minimize circulating currents between parallel strands. The manner of construction is such that the coil resembles a corkscrew. Figure 2.15 shows a helical winding during the winding process. Helical windings are used for the higher-current applications frequently encountered in the lower-voltage classes.

www.EngineeringEbooksPdf.com

FIGURE 2.14 Layer windings (single layer with two strands wound in parallel).

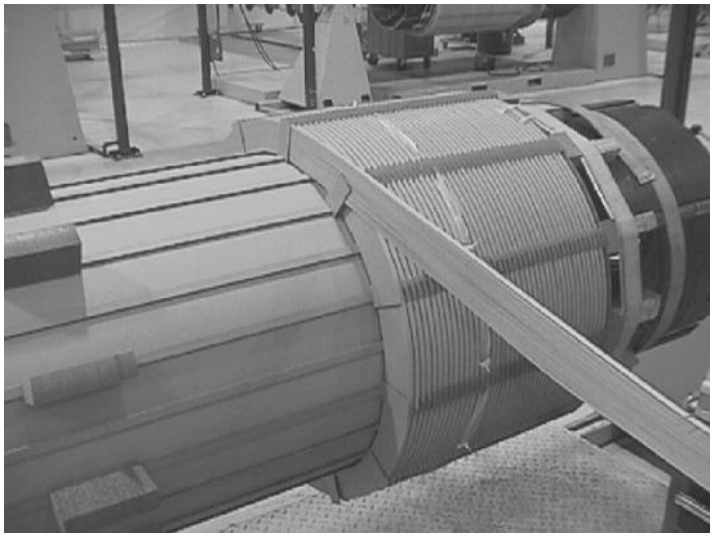

FIGURE 2.15 Helical winding during assembly.

2.5.2.4 Disc Windings

A disc winding can involve a single strand or several strands of insulated conductors wound in a series of parallel discs of horizontal orientation, with the discs connected at either the inside or outside as a crossover point. Each disc comprises multiple turns wound over other turns, with the crossovers alternating between inside and outside. Figure 2.16 outlines the basic concept, and Figure 2.17 shows typical crossovers during the winding process. Most windings of 25 kV class and above used in core-form transformers are disc type. Given the high voltages involved in test and operation, particular attention is required to avoid high stresses between discs and turns near the end of the winding when subjected to transient voltage surges. Numerous techniques have been developed to ensure an acceptable voltage distribution along the winding under these conditions.

www.EngineeringEbooksPdf.com

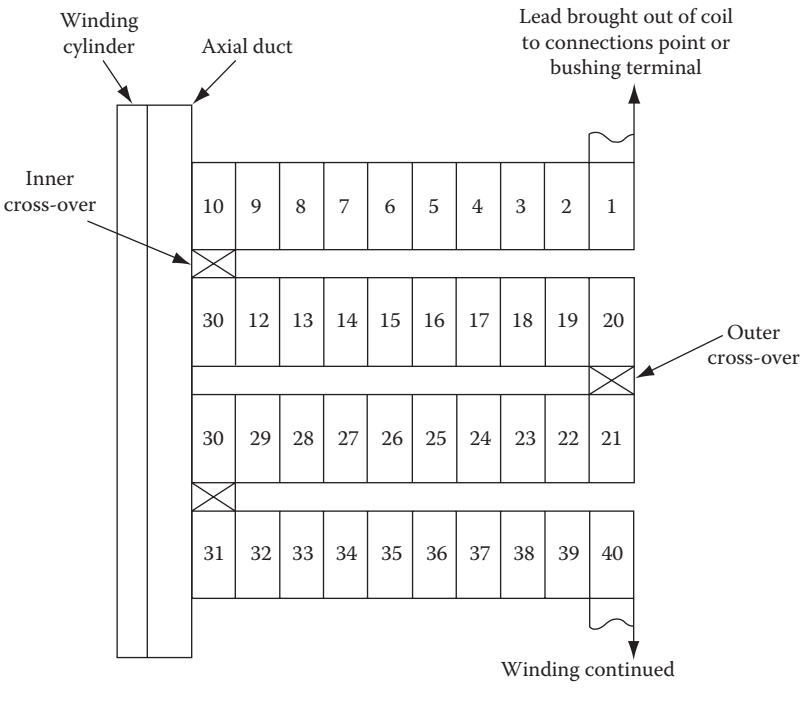

FIGURE 2.16 Basic disc winding layout.

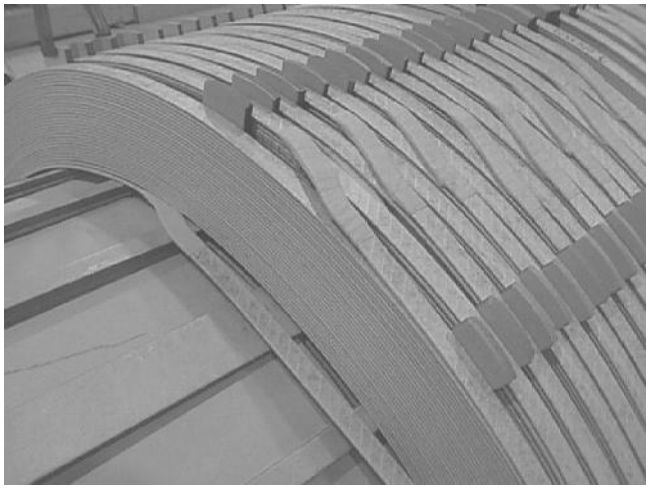

FIGURE 2.17 Disc winding inner and outer crossovers.

2.5.3 Taps-Turns Ratio Adjustment

The ability to adjust the turns ratio of a transformer is often desirable to compensate for variations in voltage that occur due to the regulation of the transformer and loading cycles. This task can be accomplished by several means. There is a significant difference between a transformer that is capable of changing the ratio while the unit is on-line (an LTC transformer) and one that must be taken off-line, or de-energized, to perform a tap change.

www.EngineeringEbooksPdf.com

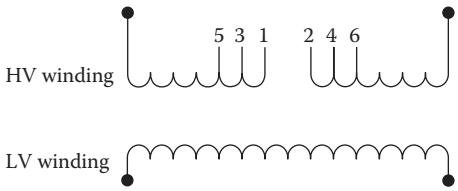

Volts L–L	DETC Positions	Leads Connected
144900	A	1–2
141450	B	2–3
138000	C	3–4
134550	D	4–5
131100	E	5–6

FIGURE 2.18 High-voltage winding schematic and connection diagram for 138 kV example.

Most transformers are provided with a means of changing the number of turns in the high-voltage circuit, whereby a part of the winding is tapped out of the circuit. In many transformers, this is done using one of the main windings and tapping out a section or sections, as illustrated by the schematic in Figure 2.18.

With larger units, a dedicated tap winding may be necessary to avoid the ampere-turn voids that occur along the length of the winding. Use and placement of tap windings vary with the application and among manufacturers. A manually operated switching mechanism, a DETC (de-energized tap changer), is normally provided for convenient access external to the transformer to change the tap position. When LTC capabilities are desired, additional windings and equipment are required, which significantly increase the size and cost of the transformer. This option is specified on about 60% of new medium and large power transformers. Figure 2.19 illustrates the basic operation by providing

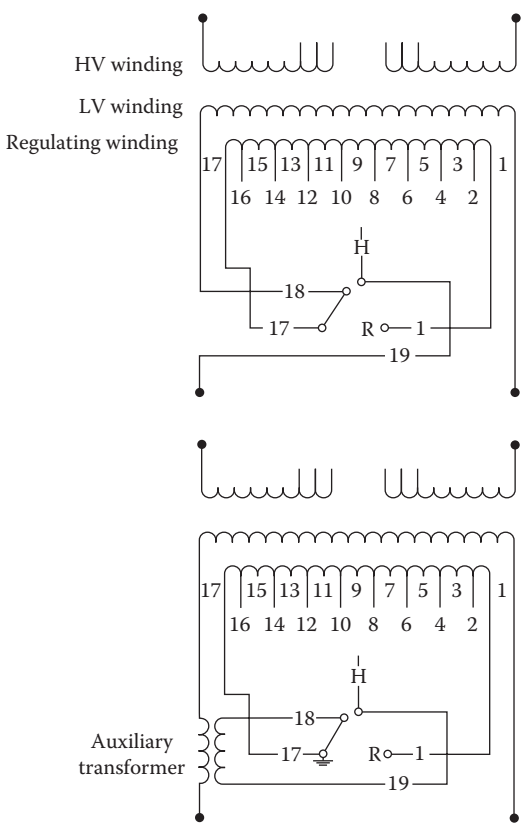

Volts L–L	LTC Positions	R Connects at Direction		H Connects
		Raise	Lower	
14520	16R	18–1	18–1	17–19
14438	15R	18–1	18–1	16–19
14355	14R	18–1	18–1	15–19
14272	13R	18–1	18–1	14–19
14190	12R	18–1	18–1	13–19
14108	11R	18–1	18–1	12–19
14025	10R	18–1	18–1	11–19
13943	9R	18–1	18–1	10–19
13860	8R	18–1	18–1	9–19
13778	7R	18–1	18–1	8–19
13695	6R	18–1	18–1	7–19
13613	5R	18–1	18–1	6–19
13530	4R	18–1	18–1	5–19
13447	3R	18–1	18–1	4–19
13365	2R	18–1	18–1	3–19
13283	1R	18–1	18–1	2–19
13200	RN	18–1	18–1	1–19
13200	N	18–17	18–17	18–19
13200	LN	18–17	18–17	17–19
13118	1L	18–17	18–17	16–19
13035	2L	18–17	18–17	15–19
12953	3L	18–17	18–17	14–19
12870	4L	18–17	18–17	13–19
12788	5L	18–17	18–17	12–19
12705	6L	18–17	18–17	11–19
12623	7L	18–17	18–17	10–19
12540	8L	18–17	18–17	9–19
12458	9L	18–17	18–17	8–19
12375	10L	18–17	18–17	7–19
12293	11L	18–17	18–17	6–19
12210	12L	18–17	18–17	5–19
12128	13L	18–17	18–17	4–19
12045	14L	18–17	18–17	3–19
11963	15L	18–17	18–17	2–19
11880	16L	18–17	18–17	1–19

FIGURE 2.19 Schematic and connection chart for transformer with an LTC supplied on a 13.2 kV low voltage.

www.EngineeringEbooksPdf.com

a sample schematic and connection chart for a transformer supplied with an LTC on the low-voltage (secondary) side. It should be recognized that there would be slight differences in this schematic based on the specific LTC being used. Figure 2.19 also shows a sample schematic where an auxiliary transformer is used between the main windings and the LTC to limit the current through the LTC mechanism.

It is also possible for a transformer to have dual voltage ratings, as is popular in spare and mobile transformers. While there is no physical limit to the ratio between the dual ratings, even ratios (e.g., 24.94 × 12.47 kV or 138 × 69 kV) are easier for manufacturers to accommodate.

2.6 Accessory Equipment

2.6.1 Accessories

There are many different accessories used to monitor and protect power transformers, some of which are considered standard features and others of which are used based on miscellaneous requirements. A few of the basic accessories are briefly discussed here.

2.6.1.1 Liquid-Level Indicator

A liquid-level indicator is a standard feature on liquid-filled transformer tanks since the liquid medium is critical for cooling and insulation. This indicator is typically a round-faced gauge on the side of the tank, with a float and float arm that moves a dial pointer as the liquid level changes.

2.6.1.2 Pressure-Relief Devices

Pressure-relief devices are mounted on transformer tanks to relieve excess internal pressures that might build up during operating conditions. These devices are intended to avoid damage to the tank. On larger transformers, several pressure-relief devices may be required due to the large quantities of oil.

2.6.1.3 Liquid-Temperature Indicator

Liquid-temperature indicators measure the temperature of the internal liquid at a point near the top of the liquid using a probe inserted in a well and mounted through the side of the transformer tank.

2.6.1.4 Winding-Temperature Indicator

A winding-temperature simulation method is used to approximate the hottest spot in the winding. An approximation is needed because of the difficulties involved in directly measuring winding temperature. The method applied to power transformers involves a current transformer, which is located to incur a current proportional to the load current through the transformer. The current transformer feeds a circuit that essentially adds heat to the top-liquid-temperature reading, which approximates a reading that models the winding temperature. This method relies on design or test data of the temperature differential between the liquid and the windings, called the winding gradient.

2.6.1.5 Sudden-Pressure Relay

A sudden- (or rapid-) pressure relay is intended to indicate a quick increase in internal pressure that can occur when there is an internal fault. These relays can be mounted on the top or side of the transformer, or they can operate in liquid or gas space.

2.6.1.6 Desiccant (Dehydrating) Breathers

Desiccant breathers use a material such as silica gel to allow air to enter and exit the tank, removing moisture as the air passes through. Most tanks are somewhat free breathing, and such a device, if properly maintained, allows a degree of control over the quality of air entering the transformer.

www.EngineeringEbooksPdf.com

2.6.2 Liquid-Preservation Systems

There are several methods to preserve the properties of the transformer liquid and associated insulation structures that it penetrates. Preservation systems attempt to isolate the transformer's internal environment from the external environment (atmosphere) while understanding that a certain degree of interaction, or "breathing," is required to accommodate variations in pressure that occur under operational conditions, such as expansion and contraction of liquid with temperature. Free-breathing systems, where the liquid is exposed to the atmosphere, are no longer used. The most commonly used methods are outlined as follows and illustrated in Figure 2.20:

- Sealed-tank systems have the tank interior sealed from the atmosphere and maintain a layer of gas—a gas space or cushion—that sits above the liquid. The gas-plus-liquid volume remains constant. Negative internal pressures can exist in sealed-tank systems at lower loads or temperatures with positive pressures as load and temperatures increase.
- Positive-pressure systems involve the use of inert gases to maintain a positive pressure in the gas space. An inert gas, typically from a bottle of compressed nitrogen, is incrementally injected into the gas space when the internal pressure falls out of range.
- Conservator (expansion tank) systems are used both with and without air bags, also called bladders or diaphragms, and involve the use of a separate auxiliary tank. The main transformer tank is completely filled with liquid, the auxiliary tank is partially filled, and the liquid expands and contracts within the auxiliary tank. The auxiliary tank is allowed to "breathe," usually through a dehydrating breather. The use of an air bag in the auxiliary tank can provide further separation from the atmosphere.

2.6.2.1 "Buchholz" Relay

On power transformers using a conservator liquid-preservation system, a "Buchholz" relay can be installed in the piping between the main transformer tank and the conservator. The purpose of the Buchholz relay is to detect faults that may occur in the transformer. One mode of operation is based on the generation of gases in the transformer during certain minor internal faults. Gases accumulate in the relay, displacing the liquid in the relay, until a specified volume is collected, at which time a float actuates a contact or switch. Another mode of operation involves sudden increases in pressure in the main transformer tank, a sign of a major fault in the transformer. Such an increase in pressure forces the

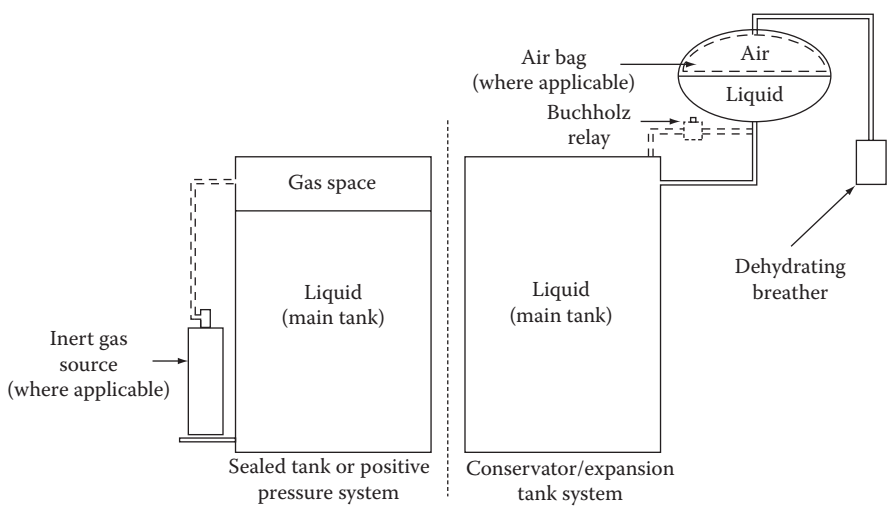

FIGURE 2.20 General arrangements of liquid preservation systems.

www.EngineeringEbooksPdf.com

liquid to surge through the piping between the main tank and the conservator, through the "Buchholz" relay, which actuates another contact or switch.

2.6.2.2 Gas-Accumulator Relay

Another gas-detection device uses a system of piping from the top of the transformer to a gas-accumulator relay. Gases generated in the transformer are routed to the gas-accumulator relay, where they accumulate until a specified volume is collected, actuating a contact or switch.

2.7 Inrush Current

When a transformer is taken off-line, a certain amount of residual flux remains in the core due to the properties of the magnetic core material. The residual flux can be as much as 50%–90% of the maximum operating flux, depending on the type of core steel. When voltage is reapplied to the transformer, the flux introduced by this source voltage builds upon that already existing in the core. In order to maintain this level of flux in the core, which can be well into the saturation range of the core steel, the transformer can draw current well in excess of the transformer's rated full-load current. Depending on the transformer design, the magnitude of this current inrush can be anywhere from 3.5 to 40 times the rated full-load current. The waveform of the inrush current is similar to a sine wave, but largely skewed to the positive or negative direction. This inrush current experiences a decay, partially due to losses that provide a dampening effect. However, the current can remain well above rated current for many cycles.

This inrush current can have an effect on the operation of relays and fuses located in the system near the transformer. Decent approximations of the inrush current require detailed information regarding the transformer design, which may be available from the manufacturer but is not typically available to the application engineer. Actual values for inrush current depend on where in the source-voltage wave the switching operations occur, the moment of opening affecting the residual flux magnitude, and the moment of closing affecting the new flux.

2.8 Transformers Connected Directly to Generators

Power transformers connected directly to generators can experience excitation and short-circuit conditions beyond the requirements defined by ANSI/IEEE standards. Special design considerations may be necessary to ensure that a power transformer is capable of withstanding the abnormal thermal and mechanical aspects that such conditions can create.

Typical generating plants are normally designed such that two independent sources are required to supply the auxiliary load of each generator. Figure 2.21 shows a typical one-line diagram of a generating station. The power transformers involved can be divided into three basic subgroups based on their specific application:

1. Unit transformers (UT) that are connected directly to the system
2. Station service transformers (SST) that connect the system directly to the generator auxiliary load
3. Unit auxiliary transformers (UAT) that connect the generator directly to the generator auxiliary load

In such a station, the UAT will typically be subjected to the most severe operational stresses. Abnormal conditions have been found to result from several occurrences in the operation of the station. Instances of faults occurring at point F in Figure 2.21—between the UAT and the breaker connecting it to the auxiliary load—are fed by two sources, both through the UT from the system and from the generator itself. Once the fault is detected, it initiates a trip to disconnect the UT from the system and to remove the generator excitation. This loss of load on the generator can result in a higher voltage on the generator, resulting in an increased current contribution to the fault from the generator. This will continue to feed the fault for a time period dependent upon the generator's fault-current decrement characteristics.

www.EngineeringEbooksPdf.com

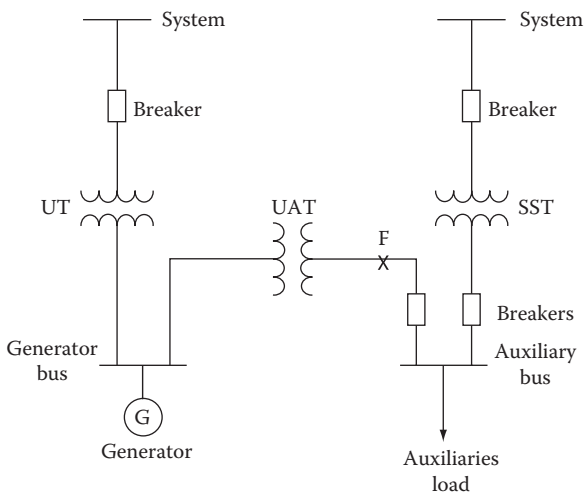

FIGURE 2.21 Typical simplified one-line diagram for the supply of a generating station's auxiliary power.

Alternatively, high generator-bus voltages can result from events such as generator-load rejection, resulting in overexcitation of a UAT connected to the generator bus. If a fault were to occur between the UAT and the breaker connecting it to the auxiliary load during this period of overexcitation, it could exceed the thermal and mechanical capabilities of the UAT. Additionally, nonsynchronous paralleling of the UAT and the SST, both connected to the generator auxiliary load, can create high circulating currents that can exceed the mechanical capability of these transformers.

Considerations can be made in the design of UAT transformers to account for these possible abnormal operating conditions. Such design considerations include lowering the core flux density at rated voltage to allow for operation at higher volts per hertz without saturation of the core, as well as increasing the design margin on the mechanical-withstand capability of the windings to account for the possibility of a fault occurring during a period of overexcitation. The thermal capacity of the transformer can also be increased to prevent overheating due to increased currents.

2.9 Modern and Future Developments

Superconducting technologies and their applications in power systems have the potential to have significant impact on future power transformer design, manufacture, and application, with numerous ongoing development efforts around the world. High-temperature superconducting (HTS) transformers, in which the copper and aluminum conductors are replaced by superconductors, are expected to be utilized in next-generation electric power grids. In the field of superconductors, "high" temperatures are considered to be in the range of 116–144 K (–157°C to –129°C), which is a major departure from the operating temperatures of conventional transformers. Application of superconductors in power transformers requires advances in cooling methodology (refrigeration) and in dielectric design, using media such as liquid nitrogen as a dielectric and heat transfer fluid. This requires cooling equipment such as cryogenic coolers as well as establishing dielectric properties of solid insulation impregnated with liquid nitrogen. Power transformers built using HTS technology are reportedly smaller and lighter, and would be capable of overloads without experiencing "loss of life" due to insulation degradation, instead using increased amounts of the replaceable coolant. An additional benefit would be an increase in efficiency of HTS transformers over conventional transformers due to the fact that resistance in superconductors is virtually zero, thus eliminating the I^2R component of the load losses.

www.EngineeringEbooksPdf.com

All of these developments will require appropriate electromagnetic modeling and analysis tools to represent superconductor windings, their small but definite ac losses, and effect of carrier metals on short-circuit currents. It is envisioned that these transformers can be made fault-current-limiting devices. This opens up many new technology development opportunities such as low-leakage-impedance transformer with reduction in voltage regulation issues and reactive power requirements.

Developments in insulating materials that are expected to influence the future design, manufacture, and application approaches of conventional transformers include nanotechnology-based synthetic insulation materials with superior performance that are becoming available, open cell polyester epoxy insulation materials that have shown good impregnation characteristics, and PPLP- and PPS-type conductor wrap insulation materials that are now available.

The feasibility of transformer core steels with higher saturation flux density is also being investigated by the U.S. Department of Energy and may represent one of the major breakthroughs in power transformer technology.

Bibliography

Bean, R.L., Chackan, N., Jr., Moore, H.R., and Wentz, E.C., *Transformers for the Electric Power Industry*, McGraw-Hill, New York, 1959.

Gebert, K.L. and Edwards, K.R., *Transformers*, 2nd edn., American Technical Publishers, Homewood, IL, 1974.

Goldman, A.W. and Pebler, C.G., *Power Transformers*, Vol. 2, Electrical Power Research Institute, Palo Alto, CA, 1987.

Hobson, J.E. and Witzke, R.L., *Power Transformers and Reactors, Electrical Transmission and Distribution Reference Book*, 4th edn., Central Station Engineers of the Westinghouse Electric Corporation, Westinghouse Electric, East Pittsburgh, PA, 1950, Chapter 5.

IEEE, *Guide for Transformers Directly Connected to Generators*, IEEE C57.116–1989, Institute of Electrical and Electronics Engineers, Piscataway, NJ, 1989.

IEEE, *Standard General Requirements for Liquid-Immersed Distribution, Power, and Regulating Transformers*, IEEE C57.12.00–2010, Institute of Electrical and Electronics Engineers, Piscataway, NJ, 2010.

IEEE, *Standard Requirements for Liquid-Immersed Power Transformers*, IEEE C57.12.10-2010, Institute of Electrical and Electronics Engineers, Piscataway, NJ, 2011.

IEEE, *Standard Terminology for Power and Distribution Transformers*, ANSI/IEEE C57.12.80–2002, Institute of Electrical and Electronics Engineers, Piscataway, NJ, 2002.

Mehta, S.P., Aversa, N., and Walker, M.S., Transforming transformers, *IEEE Spectrum*, 34, 43–49, July 1997.

Mehta, S., Gerstl, A., Riboud, J.-C., Mathe, E., Oliva, M., Ryen, K., Tuomisto, T. et al., Power transformers technology review and assessments, CIGRE Report AGA2.4, Electra No. 256, February 2008.

Vargo, S.G., Transformer design considerations for generator auxiliary and station auxiliary transformers, presented at *1976 Electric Utility Engineering Conference*, 1976.

www.EngineeringEbooksPdf.com

www.EngineeringEbooksPdf.com

3

Distribution Transformers

3.1 Historical Background **3**-2
Long-Distance Power • First Transformers • What Is a Distribution Transformer?

3.2 Construction **3**-3
Early Transformer Materials • Oil Immersion • Core Improvements • Winding Materials • Conductor Insulation • Conductor Joining • Coolants • Tank and Cabinet Materials • Modern Processing

3.3 General Transformer Design **3**-8
Liquid-Filled vs. Dry Type • Stacked vs. Wound Cores • Single-Phase • Three-Phase • Duplex and Triplex Construction • Serving Single- and Three-Phase Loads

3.4 Transformer Connections **3**-11
Single-Phase Primary Connections • Single-Phase Secondary Connections • Three-Phase Connections • Open-Delta Connections • Other Connections • Preferred Connections

3.5 Operational Concerns **3**-14
Ferroresonance • Tank Heating • Polarity and Angular Displacement

3.6 Transformer Locations **3**-16
Overhead • Underground • Directly Buried • Interior Installations

3.7 Overhead Distribution Transformers **3**-18

3.8 Underground Distribution Transformers **3**-18
Vault Installations • Surface-Operable Installations • Vault and Subsurface Common Elements • Transformers inside Buildings • Emerging Issues

3.9 Pad-Mounted Distribution Transformers **3**-26
Single-Phase Pad-Mounted Transformers • Three-Phase Pad-Mounted Transformers • Pad-Mount Common Elements

3.10 Transformer Losses **3**-32
No-Load Loss and Exciting Current • Load Loss • Harmonics and DC Effects

3.11 Transformer Performance Model **3**-34
Schematic • Complete Equivalent Circuit • Simplified Model • Impedance • Short-Circuit Current • Percent Regulation • Percent Efficiency

3.12 Transformer Loading **3**-37
Temperature Limits • Hottest-Spot Rise • Load Cycles • Thermal Time Constant • Loading Distribution Transformers

www.EngineeringEbooksPdf.com

Dudley L. Galloway
Galloway Transformer Technology, LLC

Dan Mulkey
Pacific Gas and Electric Company

Alan L. Wilks
Consultant

3.13 Transformer Testing 3-38
Design Tests • Production Tests
3.14 Transformer Protection 3-38
Goals of Protection • Conventional Transformers • Internal Protection • Coordination of Protection • Internal Secondary Circuit Breakers • CSP® Transformers • Protection Philosophy • Lightning Arresters
3.15 Economic Application 3-44
Historical Perspective • Evaluation Methodology • Evaluation Formula • U.S. Department of Energy Efficiency Regulations
References 3-46

3.1 Historical Background

3.1.1 Long-Distance Power

In 1886, George Westinghouse built the first long-distance ac (alternating current) electric lighting system in Great Barrington, Massachusetts. The power source was a 25 hp steam engine driving an alternator with an output of 500 V and 12 A. In the middle of town, 4000 ft away, transformers were used to reduce the voltage to serve light bulbs located in nearby stores and offices (Powel, 1997).

3.1.2 First Transformers

Westinghouse realized that electric power could only be delivered over distances by transmitting at a higher voltage and then reducing the voltage at the location of the load. He purchased U.S. patent rights to the transformer developed by Gaulard and Gibbs, shown in Figure 3.1a. William Stanley, Westinghouse's electrical expert, designed and built the transformers to reduce the voltage from 500 to 100 V on the Great Barrington system. The Stanley transformer is shown in Figure 3.1b.

3.1.3 What Is a Distribution Transformer?

Just like the transformers in the Great Barrington system, any transformer that takes voltage from a primary distribution circuit and "steps down" or reduces it to a secondary distribution circuit or a consumer's service circuit is a distribution transformer. Many industry standards tend to limit this definition by kVA rating (e.g., 500 kVA and smaller for single-phase and 5000 kVA and smaller for three-phase), distribution transformers can have lower ratings and can have ratings of 5000 kVA or even higher.

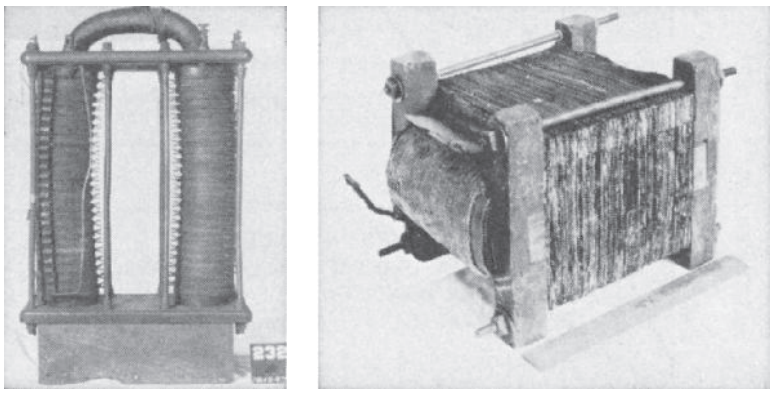

(a) (b)

FIGURE 3.1 (a) Gaulard and Gibbs transformer and (b) William Stanley's early transformer. (By permission of ABB Inc., Raleigh, NC.)

www.EngineeringEbooksPdf.com

3.2 Construction

3.2.1 Early Transformer Materials

From the pictures in Figure 3.1, the Gaulard–Gibbs transformer seems to have used a coil of many turns of iron wire to create a ferromagnetic loop. The Stanley model, however, appears to have used flat sheets of iron, stacked together and clamped with wooden blocks and steel bolts. Winding conductors were most likely made of copper from the very beginning. Several methods of insulating the conductor were used in the early days. Varnish dipping was often used and is still used for some applications today. Paper-tape wrapping of conductors has been used extensively, but this has now been almost completely replaced by other methods.

3.2.2 Oil Immersion

In 1887, the year after Stanley designed and built the first transformers in the United States, Elihu Thompson patented the idea of using mineral oil as a transformer cooling and insulating medium (Myers et al., 1981). Although materials have improved dramatically, the basic concept of an oil-immersed cellulosic insulating system has changed very little in well over a century.

3.2.3 Core Improvements

The major improvement in core materials was the introduction of silicon steel in 1932. Over the years, the performance of electrical steels has been improved by grain orientation (1933) and continued improvement in the steel chemistry and insulating properties of surface coatings. The thinner and more effective the insulating coatings are, the more efficient a particular core material will be. The thinner the laminations of electrical steel, the lower the losses in the core due to circulating currents. Mass production of distribution transformers has made it feasible to replace stacked cores with wound cores. C-cores were first used in distribution transformers around 1940. A C-core is made from a continuous strip of steel, wrapped and formed into a rectangular shape, and then annealed and bonded together. The core is then sawn in half to form two C-shaped sections that are machine faced and reassembled around the coil. In the mid-1950s, various manufacturers developed wound cores that were die formed into a rectangular shape and then annealed to relieve their mechanical stresses. The cores of most distribution transformers made today are made with wound cores (originally patented in 1933). Typically, the individual layers are cut, with each turn slightly lapping over itself. This allows the core to be disassembled and put back together around the coil structures while allowing a minimum of energy loss in the completed core. Electrical steel manufacturers now produce stock for wound cores that is from 0.35 to 0.18 mm thick in various grades. In the early 1980s, rapid increases in the cost of energy prompted the introduction of amorphous core steel. Amorphous metal is cooled down from the liquid state so rapidly that there is no time to organize into a crystalline structure. Thus it forms the metal equivalent of glass and is often referred to as metal glass or "met-glass." Amorphous core steel is usually 0.025 mm thick and offers another choice in the marketplace for transformer users that have very high energy costs.

3.2.4 Winding Materials

Conductors for low-voltage windings were originally made from small rectangular copper bars, referred to as "strap." Higher ratings could require as many as 16 of these strap conductors in parallel to make one winding having the needed cross section. A substantial improvement was gained by using copper strip, which could be much thinner than strap but with the same width as the coil itself. In the early 1960s, instability in the copper market encouraged the use of aluminum strip conductor. The use of aluminum round wire in the primary windings followed in the early 1970s (Palmer, 1983) as a direct result of advanced methods in terminating aluminum wire. Today, both aluminum and copper

www.EngineeringEbooksPdf.com

conductors are used in distribution transformers, and the choice is largely dictated by economics. Round wire separated by paper insulation between layers has several disadvantages. The wire tends to "gutter," that is, to fall into the troughs in the layer below. Also, the contact between the wire and paper occurs only along two lines on either side of the conductor. This is a significant disadvantage when an adhesive is used to bind the wire and paper together. To prevent these problems, manufacturers often flatten the wire into an oval or rectangular shape in the process of winding the coil. This allows more conductor to be wound into a given size of coil and improves the mechanical and electrical integrity of the coil (Figure 3.4).

3.2.5 Conductor Insulation

The most common insulation today for high-voltage windings is an enamel coating on the wire, with thermally upgraded kraft paper used between layers. Low-voltage strip can be bare with paper insulation between layers. The use of paper wrapping on strap conductor is slowly being replaced by synthetic polymer coatings or wrapping with synthetic cloth. For special applications, synthetic paper such as DuPont's Nomex* can be used in place of kraft paper to permit higher continuous operating temperatures within the transformer coils.

3.2.5.1 Thermally Upgraded Paper

In 1958, manufacturers introduced insulating paper that was chemically treated to resist breakdown due to thermal aging. At the same time, testing programs throughout the industry were showing that the estimates of transformer life being used at the time were extremely conservative. By the early 1960s, citing the functional-life testing results, the industry began to change the standard average winding-temperature rise for distribution transformers, first to a dual rating of 55°C/65°C and then to a single 65°C rating as is currently used in IEEE C57.91. In some parts of the world, the distribution transformer standard remains at 55°C rise for devices using non-upgraded paper.

3.2.6 Conductor Joining

The introduction of aluminum wire, strap, and strip conductors and enamel coatings presented a number of challenges to distribution transformer manufacturers. Aluminum spontaneously forms an insulating oxide coating when exposed to air. This oxide coating must be removed or avoided whenever an electrical connection is desired. Also, electrical-conductor grades of aluminum are quite soft and are subject to cold flow and differential expansion problems when mechanical clamping is attempted. Some methods of splicing aluminum wires include soldering or crimping with special crimps that penetrate enamel and oxide coatings and seal out oxygen at the contact areas. Aluminum strap or strip conductors can be TIG (tungsten inert gas) welded. Aluminum strip can also be cold welded or crimped to other copper or aluminum connectors. Bolted connections can be made to soft aluminum if the joint area is properly cleaned. "Belleville" spring washers and proper torquing are used to control the clamping forces and contain the metal that wants to flow out of the joint. Aluminum joining problems are sometimes mitigated by using hard alloy tabs with tin plating to make bolted joints using standard hardware.

3.2.7 Coolants

3.2.7.1 Mineral Oil

Mineral oil surrounding a transformer core–coil assembly enhances the dielectric strength of the winding and prevents oxidation of the core. Dielectric improvement occurs because oil has a greater electrical

* Nomex is a registered trademark of E.I. du Pont de Nemours & Co., Wilmington, DE.

www.EngineeringEbooksPdf.com

withstand than air and because the dielectric constant of oil, 2.2, is closer to that of the insulation. As a result, the stress on the insulation is lessened when oil replaces air in a dielectric system. Oil also picks up heat while it is in contact with the conductors and carries the heat out to the tank surface by self-convection. Thus a transformer immersed in oil can have smaller electrical clearances and smaller conductors for the same voltage and kVA ratings.

3.2.7.2 Askarels

Beginning about 1932, a class of liquids called askarels or polychlorinated biphenyls (PCBs) was used as a substitute for mineral oil where flammability was a major concern. Askarel-filled transformers could be placed inside or next to a building where only dry types were used previously. Although these coolants were considered nonflammable, when used in electrical equipment they could decompose when exposed to electric arcs or fires to form hydrochloric acid and toxic furans and dioxins. The compounds were further undesirable because of their persistence in the environment and their ability to accumulate in higher animals, including humans. Testing by the U.S. Environmental Protection Agency has shown that PCBs can cause cancer in animals and cause other noncancerous health effects. Studies in humans provide supportive evidence for potential carcinogenic and noncarcinogenic effects of PCBs (http://www.epa.gov). The use of askarels in new transformers was outlawed in 1977 (Claiborne, 1999). Work still continues to retire and properly dispose of transformers containing askarels or askarel-contaminated mineral oil. IEEE C57.12.00 requires transformer manufacturers to state on the nameplate that new equipment left the factory with less than 2 ppm PCBs in the oil.

3.2.7.3 High-Temperature Hydrocarbons

Among the coolants used to take the place of askarels in distribution transformers are high-temperature hydrocarbons (HTHCs), also called high-molecular-weight hydrocarbons. These coolants are classified by the National Electric Code as "less flammable" if they have a fire point above 300°C. The disadvantages of HTHCs include increased cost and a diminished cooling capacity from the higher viscosity that accompanies the higher molecular weight.

3.2.7.4 Silicones

Another coolant that meets the National Electric Code requirements for a less-flammable liquid is a silicone, chemically known as polydimethylsiloxane. Silicones are only occasionally used because they exhibit biological persistence if spilled and are more expensive than mineral oil or HTHCs.

3.2.7.5 Halogenated Fluids

Mixtures of tetrachloroethane and mineral oil were tried as an oil substitute for a few years. This and other chlorine-based compounds are no longer used because of a lack of biodegradability, the tendency to produce toxic by-products, and possible effects on the Earth's ozone layer.

3.2.7.6 Natural Esters

Natural ester insulating fluids, particularly Cooper Power System's Envirotemp™ FR3™ and ABB's BIOTEMP®, have become mainstream. Originating from vegetable seed, these fluids are renewable and biodegradable. In comparison to mineral oil, natural ester insulating fluids provide many improved characteristics. They are rated as a "less flammable fluid" per the NEC, providing increased fire safety from superior flash and fire resistance. They also provide high-temperature operating capability, and they are biodegradable. A few utilities and manufacturers are starting to design and operate natural ester insulated transformers at 75°C rise, marking the first major innovation since the adoption of upgraded kraft paper and the resulting shift from 55°C to 65°C operating temperature.

www.EngineeringEbooksPdf.com

FIGURE 3.2 Typical three-phase pad-mounted distribution transformer. (By permission of ABB Inc., Jefferson City, MO.)

3.2.8 Tank and Cabinet Materials

A distribution transformer is expected to operate satisfactorily for 30 years in an outdoor environment while extremes of loading work to weaken the insulation systems inside the transformer. This high expectation demands the best in state-of-the-art design, metal processing, and coating technologies. A typical three-phase pad-mounted transformer is illustrated in Figure 3.2.

A suite of "enclosure integrity" standards has been developed to foster the ability of these transformers to withstand the environments in which they operate:

- IEEE C57.12.28, *Standard for Pad-Mounted Equipment—Enclosure Integrity*
- IEEE C57.12.29, *Standard for Pad-Mounted Equipment—Enclosure Integrity for Coastal Environments*
- IEEE C57.12.30, *Standard for Pole-Mounted Equipment—Enclosure Integrity for Coastal Environments*
- IEEE C57.12.31, *Standard for Pole-Mounted Equipment—Enclosure Integrity*
- IEEE C57.12.32, *Standard for Submersible Equipment—Enclosure Integrity*

3.2.8.1 Mild Steel

Most overhead and pad-mounted transformers have their tank and cabinet parts made from mild carbon steel. In recent years, major manufacturers have started using coatings applied by electrophoretic methods (aqueous deposition) and by powder coating. These new methods have largely replaced the traditional flow-coating and solvent-spray application methods.

3.2.8.2 Stainless Steel

Since the mid-1960s and continuing through the 1990s, single-phase submersibles were almost exclusively made using AISI 400-series stainless steel. These grades of stainless steel were selected for their good welding properties and their tendency to resist pit corrosion. Lately, both 400-series and 304L (low-carbon chromium–nickel) stainless steel have been used for transformer tanks and cabinets. While 304L is more expensive than 400, it is available in larger sheets. This made it feasible to build three-phase submersibles and pad mounts in stainless steel.

Utilities specify stainless steel tanks and cabinets for pad mounts and pole types where severe environments justify the added cost. Transformer users with severe coastal environments have observed

www.EngineeringEbooksPdf.com

FIGURE 3.3 Single-phase transformer with composite hood. (By permission of ABB Inc., Jefferson City, MO.)

that pad mounts show the worst corrosion damage where the cabinet sill and lower areas of the tank contact the pad. This is easily explained by the tendency for moisture, leaves, grass clippings, lawn chemicals, etc., to collect on the pad surface. Higher areas of a tank and cabinet are warmed and dried by the operating transformer, but the lowest areas in contact with the pad remain cool. Also, the sill and tank surfaces in contact with the pad are most likely to have the paint scratched. To address this, manufacturers sometimes offer hybrid transformers, where the cabinet sill, hood, or the tank base may be selectively made from stainless steel.

3.2.8.3 Composites

There have been many attempts to conquer the corrosion tendencies of transformers by replacing metal structures with reinforced plastics. One of the more successful was a one-piece composite hood for single-phase pad-mounted transformers (Figure 3.3). However the major disadvantage of composites is the high cost of the mold and the extremely limited ability to make structural modifications. Metal cabinets, on the other hand, are infinitely and easily variable over large ranges.

3.2.9 Modern Processing

3.2.9.1 Adhesive Bonding

Today's distribution transformers almost universally use thermally upgraded kraft insulating paper that has a diamond pattern of epoxy adhesive on each side. Each finished coil is heated before assembly. The heating drives out any moisture that might have been absorbed in the insulation. Bringing the entire coil to the elevated temperature also causes the epoxy adhesive to bond and cure, making the coil into a solid mass. Thus it is more capable of sustaining the high thermal and mechanical stresses that the transformer encounters under short-circuit current conditions. Sometimes the application of heat is combined with clamping of the coil sides to ensure intimate contact of the epoxy-coated paper with the conductors as the epoxy cures. Another way to improve adhesive bonding in the high-voltage winding is to flatten round wire as the coil is wound. This produces two flat sides, hence more surface area, to contact adhesive on the layer paper above and below the conductor. It also improves the space factor of the conductor cross section, permitting more actual conductor to fit within the same core window. Flattened conductor is less likely to "gutter" or fall into the spaces in the previous layer, damaging the layer insulation. Figure 3.4 shows a cross section of enameled round wire after flattening.

www.EngineeringEbooksPdf.com

FIGURE 3.4 Cross section of enameled round wire after flattening. (By permission of ABB Inc., Jefferson City, MO.)

3.2.9.2 Vacuum Processing

With the coil still warm from the bonding process, transformers are held at a high vacuum while oil flows into the tank. The combination of heat and vacuum assures that all moisture and all air bubbles have been removed from the coil, providing electrical integrity and a long service life. Factory processing with heat and vacuum is impossible to duplicate in the field or in most service facilities. Transformers, if opened, should be exposed to the atmosphere for minimal amounts of time, and oil levels should never be taken down below the tops of the coils. All efforts must be taken to keep air bubbles out of the insulation structure.

3.3 General Transformer Design

3.3.1 Liquid-Filled vs. Dry Type

The vast majority of distribution transformers on utility systems today are liquid filled. Liquid-filled transformers offer the advantages of smaller size, lower cost, and greater overload capabilities compared with dry types of the same rating.

3.3.2 Stacked vs. Wound Cores

Stacked-core construction favors the manufacturer who makes a small quantity of widely varying special designs in its facility. A manufacturer who builds large quantities of identical designs will benefit from the automated fabrication and processing of wound cores. Figure 3.5 shows three-phase stacked and wound cores.

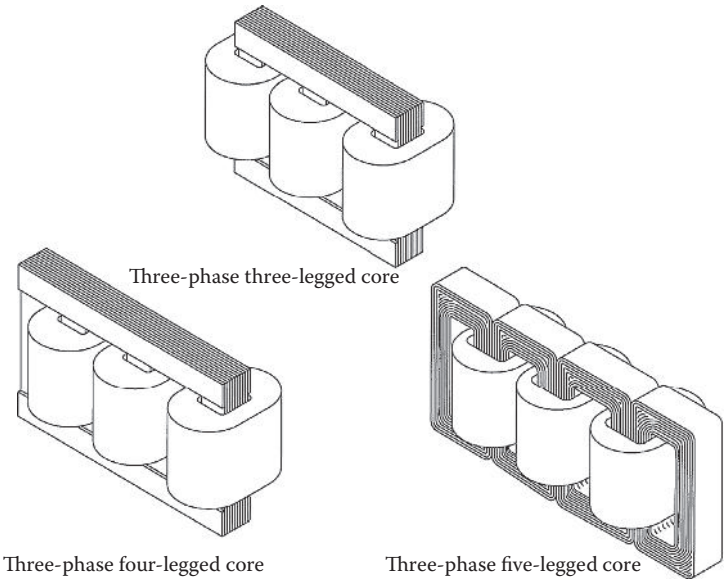

FIGURE 3.5 Three- and four-legged stacked cores and five-legged wound core. (From IEEE C57.105-1978, *IEEE Guide for Application of Transformer Connections in Three-Phase Distribution Systems*, Copyright 1978, Institute of Electrical and Electronics Engineers, Inc., Piscataway, NJ. Reprinted with the permission of the IEEE. The IEEE disclaims any responsibility or liability resulting from the placement and use in the described manner.)

www.EngineeringEbooksPdf.com

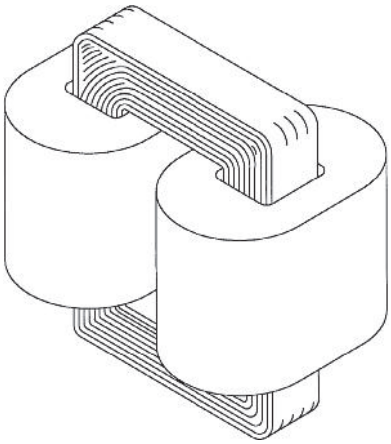

Single-phase core-type transformer

FIGURE 3.6 Core-form construction. (From IEEE C57.105-1978, *IEEE Guide for Application of Transformer Connections in Three-Phase Distribution Systems*, Copyright 1978, Institute of Electrical and Electronics Engineers, Inc., Piscataway, NJ. Reprinted with the permission of the IEEE. The IEEE disclaims any responsibility or liability resulting from the placement and use in the described manner.)

3.3.3 Single-Phase

The vast majority of distribution transformers used in North America are single-phase transformers serving single-phase, 120/240 V, residential load. Single-phase transformers can also be connected into banks comprised of two or three separate units. Each unit in a bank has the same voltage ratings but need not have the same kVA rating. These banks can then serve three-phase load.

3.3.3.1 Core-Form Construction

A single core loop linking two identical winding coils is referred to as core-form construction. This is illustrated in Figure 3.6.

3.3.3.2 Shell-Form Construction

A single winding structure linking two core loops is referred to as shell-form construction. This is illustrated in Figure 3.7.

3.3.3.3 Winding Configuration

Most distribution transformers for residential service are built as a shell form, where the secondary winding is split into two sections with the primary winding in between. This so-called LO-HI-LO configuration results in lower impedance than if the secondary winding is contiguous. The LO-HI configuration is used where higher impedance is desired and especially on higher-kVA ratings where higher impedances are mandated by standards to limit short-circuit current. Core-form transformers are always built LO-HI because the two coils must always carry the same currents. A 120/240 V service using core-form in the LO-HI-LO configuration would need eight interconnected coil sections. This is considered too complicated to be commercially practical. LO-HI-LO and LO-HI configurations are illustrated in Figure 3.8.

3.3.4 Three-Phase

Most distribution transformers built and used outside North America are three-phase, even for residential service. In North America, three-phase transformers serve agricultural, commercial, and industrial loads.

www.EngineeringEbooksPdf.com

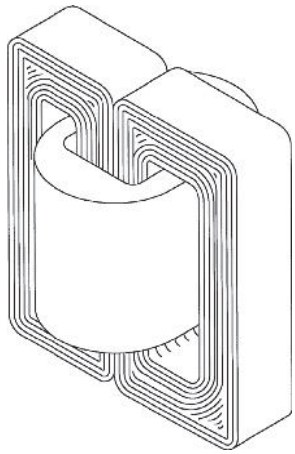

Single-phase shell-type transformer

FIGURE 3.7 Shell-form construction. (From IEEE C57.105-1978, *IEEE Guide for Application of Transformer Connections in Three-Phase Distribution Systems*, Copyright 1978, Institute of Electrical and Electronics Engineers, Inc., Piscataway, NJ. Reprinted with the permission of the IEEE. The IEEE disclaims any responsibility or liability resulting from the placement and use in the described manner.)

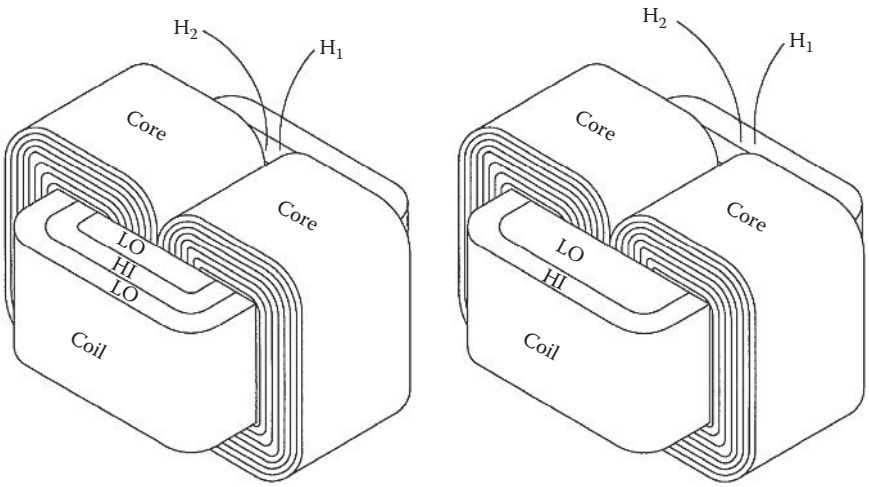

FIGURE 3.8 LO-HI-LO and LO-HI configurations. (By permission of ABB Inc., Jefferson City, MO.)

They are also used to supply large residential complexes, such as condominiums and high-rise buildings. A relatively new application for three-phase transformers is in "wind farms" where transformers are used to step up the voltage from wind turbines (around 600 V) to a distribution voltage (typically 19,920 V). All three-phase distribution transformers are said to be of core-form construction, although the definitions outlined earlier do not hold. Three-phase transformers have one coaxial coil for each phase encircling a vertical leg of the core structure. Stacked cores have three or possibly four vertical legs, while wound cores have a total of four loops creating five legs or vertical paths: three down through the center of the three coils and one on the end of each outside coil. The use of three vs. four or five legs in the core structure has a bearing on which electrical connections and loads can be used by a particular transformer. The advantage of three-phase electrical systems in general is the economy gained by having the phases share common conductors and other components. This is especially true of three-phase transformers using common core structures. See Figure 3.5.

www.EngineeringEbooksPdf.com

3.3.5 Duplex and Triplex Construction

Occasionally, utilities will require a single tank that contains two completely separate core–coil assemblies. Such a design is sometimes called a duplex and can have any size combination of single-phase core–coil assemblies inside. The effect is the same as constructing a two-unit bank with the advantage of having only one tank to place. Duplexes are particularly useful in serving a small three-phase load in combination with single-phase load, such as a sewer lift pump and multiple residential houses. Similarly, a utility may request a triplex transformer with three completely separate and distinct core structures (of the same kVA rating) mounted inside one tank.

3.3.6 Serving Single- and Three-Phase Loads

The utility engineer has a number of transformer configurations to choose from, and it is important to match the transformer to the load being served. Small single-phase loads are easily served by a single-phase transformer. A large single-phase load may be best served by a three-phase transformer with the single-phase load balanced among the three phases. Add a little three-phase load, and the best bet is a bank of two transformers or a duplex. Increase the three-phase load and retain the single-phase load, and the best bank is a bank of three transformers. A balanced three-phase load is best served by a three-phase transformer, with each phase's coil identically loaded (ABB, 1995).

Another driver is the service voltage. Single-phase transformers commonly serve 120/240 V load, and banks of two or three single-phase transformers serve a mixture of 120/240 V single-phase and 240 V three-phase loads. These transformers are commonly available through 500 kVA. Three-phase 120/208 V can be served by a bank of three single-phase transformers or a three-phase transformer. Dense clusters of single-phase residential load can be served at 120/208 V using a three-phase transformer. The 120/208 V secondary is available through 1000 kVA. For larger loads, 277/480 V is commonly used, and while usually served from a three-phase transformer can also be supplied by a bank of appropriately rated single-phase transformers. Even larger loads are served using 2400, 4160, or 2400/4160 V from a three-phase transformer, utilizing what in older areas is a primary voltage as a service voltage.

3.4 Transformer Connections

3.4.1 Single-Phase Primary Connections

Single-phase transformers have a single primary winding and have either two insulated terminations or one insulated and one grounded termination.

3.4.1.1 Grounded Wye Connection

Single-phase transformers that must have one side of the primary grounded are only provided with one primary connection bushing. The primary circuit is completed by grounding the transformer tank to the grounded system neutral. Thus, it is imperative that proper grounding procedure be followed when the transformer is installed so that the tank never becomes "hot." Since one end of the primary winding is always grounded, the manufacturer can economize the design and grade the high-voltage insulation. Grading provides less insulation at the end of the winding closest to ground. A transformer with graded insulation usually cannot be converted to operate phase-to-phase. The primary-voltage designation on the nameplate of a graded insulation transformer will include the letters, "GRDY," as in "12470 GRDY/7200," indicating that it must be connected phase-to-ground on a grounded wye system.

3.4.1.2 Fully Insulated Connection

Single-phase transformers supplied with fully insulated (not graded) coils and two separate primary connection bushings may be connected phase-to-phase on a three-phase system or phase-to-ground on

www.EngineeringEbooksPdf.com

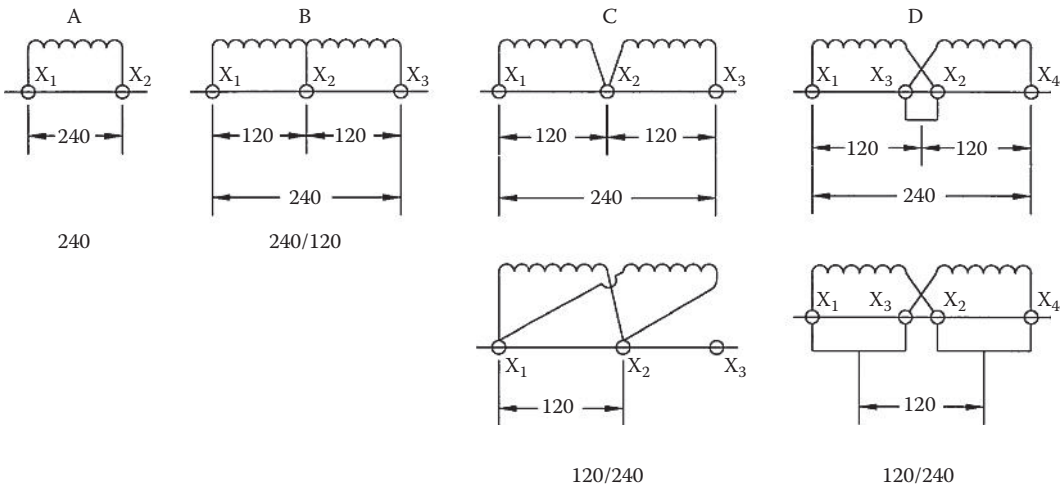

FIGURE 3.9 Single-phase secondary connections. (By permission of ABB Inc., Jefferson City, MO.)

a grounded wye system. The primary voltage designation on the nameplate of a fully insulated transformer will look like 7200/12470Y, where 7200 is the coil voltage. If the primary voltage shows only the coil voltage, as in 2400, then the bushings can sustain only a limited voltage from the system ground, and the transformer must be connected phase-to-phase.

3.4.2 Single-Phase Secondary Connections

Single-phase distribution transformers usually have two, three, or four secondary bushings, and the most common voltage ratings are 240 and 480, with and without a mid-tap connection. Figure 3.9 shows various single-phase secondary connections.

3.4.2.1 Two Secondary Bushings

A transformer with two bushings can supply only a single voltage to the load.

3.4.2.2 Three Secondary Bushings

A transformer with three bushings supplies a single voltage with a tap at the midpoint of that voltage. This is the common three-wire residential service used in North America. For example, a 120/240 V secondary can supply load at either 120 or 240 V as long as neither 120 V coil section is overloaded. Transformers with handholes or removable covers can be internally reconnected from three to two bushings in order to serve full kVA from the parallel connection of coil sections. These are designated 120/240 or 240/480 V, with the smaller value first. Most pad-mounted distribution transformers are permanently and completely sealed and therefore cannot be reconnected from three to two bushings. The secondary voltage for permanently sealed transformers with three bushings is 240/120 or 480/240 V.

3.4.2.3 Four Secondary Bushings

Secondaries with four bushings can be connected together external to the transformer to create a mid-tap connection with one bushing in common, or a two-bushing connection where the internal coil sections are paralleled. The four-bushing secondary will be designated as 120/240 or 240/480 V, indicating that a full kVA load can be served at the lower voltage. The distinction between 120/240 and 240/120 V must be carefully followed when transformers are being specified.

www.EngineeringEbooksPdf.com

3.4.3 Three-Phase Connections

When discussing three-phase distribution transformer connections, it is well to remember that this can refer to a single three-phase transformer or two or three single-phase transformers interconnected to create a three-phase bank. For either an integrated transformer or a bank, the primary or secondary can be wired in either delta or wye connection. The wye connections can be either grounded or ungrounded. However, not all combinations will operate satisfactorily, depending on the transformer construction, characteristics of the load, and the source system. Detailed information on three-phase connections can be found in IEEE C57.105 or in the ABB Distribution Transformer Guide (ABB, 1995). Some connections that are of special concern are listed as follows.

3.4.3.1 Ungrounded Wye–Grounded Wye

A wye–wye connection where the primary neutral is left floating produces an unstable neutral where high third-harmonic voltages are likely to appear. In some Asian systems, the primary neutral is stabilized by using a three-legged core and by limiting current unbalance on the feeder at the substation.

3.4.3.2 Grounded Wye–Delta

This connection is called a grounding transformer. Unbalanced primary voltages will create high currents in the delta circuit. Unless the transformer is specifically designed to handle these circulating currents, the secondary windings can be overloaded and burn out. Unless its use is intended to be as a grounding transformer, the use of the ungrounded wye–delta is suggested instead.

3.4.3.3 Grounded Wye–Grounded Wye

A grounded wye–wye connection will sustain unbalanced voltages, but it must use a four- or five-legged core to provide a return path for zero-sequence flux.

3.4.3.4 Three-Phase Secondary Connections–Delta

Three-phase transformers or banks with *delta* secondaries will have simple nameplate designations such as 240 or 480. If one winding has a mid-tap, say for lighting, then the nameplate will say 240/120 or 480/240, similar to a single-phase transformer with a center tap. Delta secondaries can be grounded at the mid-tap or any corner.

3.4.3.5 Three-Phase Secondary Connections–Wye

Popular voltages for wye secondaries are 208Y/120, 480Y/277, and 600Y/347.

3.4.4 Open-Delta Connections

Two single-phase transformers and duplex transformers can be connected into a bank having either an open-wye or open-delta primary along with an open-delta secondary. Such banks are usually used to serve loads that are predominantly single-phase in conjunction with some three-phase load. The secondary leg serving the single-phase load usually has a mid-tap, which is grounded.

3.4.5 Other Connections

For details on other connections such as T-T and zigzag, consult IEEE C57.12.80, IEEE C57.105, or the ABB Distribution Transformer Guide (ABB, 1995).

3.4.6 Preferred Connections

In the earliest days of electric utility systems, it was found that induction motors drew currents that exhibited a substantial third-harmonic component. In addition, transformers on the system that were

www.EngineeringEbooksPdf.com

operating close to the saturation point of their cores had third harmonics in the exciting current. One way to keep these harmonic currents from spreading over an entire system was to use delta-connected windings in transformers. Third-harmonic currents add up in phase in a delta loop and flow around the loop, dissipating themselves as heat in the windings but minimizing the harmonic voltage distortion that might be seen elsewhere on the utility's system. With the advent of suburban underground systems in the 1960s, it was found that a transformer with a delta-connected primary was more prone to ferroresonance problems because of higher capacitance between buried primary cables and ground. An acceptable preventive was to go to grounded-wye–grounded-wye transformers on all but the heaviest industrial applications.

3.5 Operational Concerns

Even with the best engineering practices, abnormal situations can arise that may produce damage to equipment and compromise the continuity of the delivery of quality power from the utility.

3.5.1 Ferroresonance

Ferroresonance is an overvoltage phenomenon that occurs when charging current for a long underground cable or other capacitive reactance saturates the core of a transformer. Such a resonance can result in voltages as high as five times the rated system voltage, potentially damaging lightning arresters and other equipment and possibly even the transformer itself. When ferroresonance is occurring, the transformer is likely to produce loud squeals and groans, and the noise has been likened to the sound of steel roofing being dragged across a concrete surface. A typical ferroresonance situation is shown in Figure 3.10 and consists of long underground cables feeding a transformer with a delta-connected primary. The transformer is unloaded or very lightly loaded, and switching or fusing for the circuit operates one phase at a time. Ferroresonance can occur when energizing the transformer as the first or second switch is closed, or it can occur if one or two phases open and the load is very light. Ferroresonance will disappear as soon as all three phases are closed or opened. Ferroresonance is more likely to occur on systems

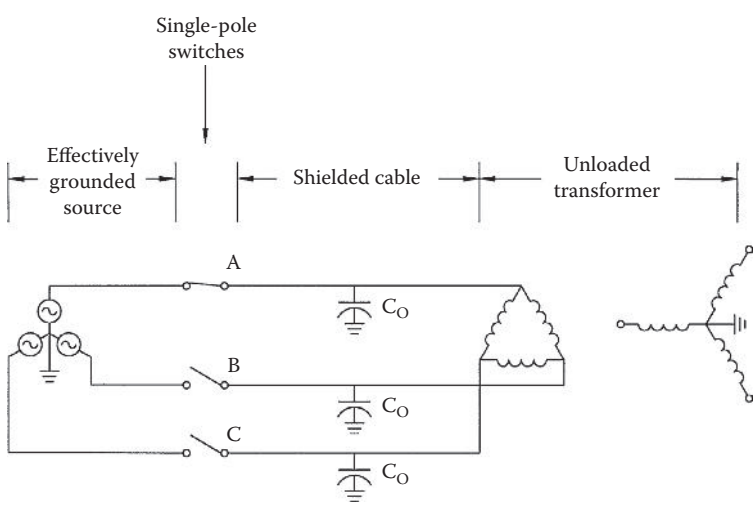

FIGURE 3.10 Typical ferroresonance situation. (From IEEE C57.105-1978, *IEEE Guide for Application of Transformer Connections in Three-Phase Distribution Systems*, Copyright 1978, Institute of Electrical and Electronics Engineers, Inc., Piscataway, NJ. Reprinted with the permission of the IEEE. The IEEE disclaims any responsibility or liability resulting from the placement and use in the described manner.)

www.EngineeringEbooksPdf.com

with higher primary voltage. Occasionally it has been observed even when there is no cable present. All of these factors—delta or wye connection, cable length, voltage, load, single-phase switching—affect ferroresonance. Attempts to set precise limits for prevention of the phenomenon have been frustrating.

3.5.2 Tank Heating

Another phenomenon that can occur on three-phase transformers because of the common core structure between phases is tank heating. Wye–wye-connected transformers that are built on four- or five-legged cores are likely to saturate the return legs when zero-sequence voltage exceeds about 33% of the normal line-to-neutral voltage. This can happen, for example, if two phases of an overhead line wrap together and are energized by a single electrical phase. When the return legs are saturated, magnetic flux is then forced out of the core and finds a return path through the tank walls. Eddy currents produced by magnetic flux in the ferromagnetic tank steel will produce tremendous localized heating, occasionally burning the tank paint and boiling the oil inside. For most utilities, the probability of this happening is so low that it is not economically feasible to take steps to prevent it. A few, with a higher level of concern, purchase only triplex transformers, having three separate core–coil assemblies in one tank.

3.5.3 Polarity and Angular Displacement

The phase relationship of single-phase transformer voltages is described as "polarity." The term for voltage phasing on three-phase transformers is "angular displacement."

3.5.3.1 Single-Phase Polarity

The polarity of a transformer can either be additive or subtractive. These terms describe the voltage that may appear on adjacent terminals if the remaining terminals are jumpered together. The origin of the polarity concept is obscure, but apparently, early transformers having lower primary voltages and smaller kVA sizes were first built with additive polarity. When the range of kVAs and voltages was extended, a decision was made to switch to subtractive polarity so that voltages between adjacent bushings could never be higher than the primary voltage already present. Thus, the transformers built to IEEE standards today are additive if the voltage is 8660 or below and the kVA is 200 or less; otherwise they are subtractive. This differentiation is strictly a U.S. phenomenon. Distribution transformers built to Canadian standards are all additive, and those built to Mexican standards are all subtractive. Although the technical definition of polarity involves the relative position of primary and secondary bushings, the position of primary bushings is always the same according to standards. Therefore, when facing the secondary bushings of an additive transformer, the X_1 bushing is located to the right (of X_3), while for a subtractive transformer, X_1 is farthest to the left. To complicate this definition, a single-phase pad-mounted transformer built to IEEE standard Type 2 will always have the X_2 mid-tap bushing on the lowest right-hand side of the low-voltage slant pattern. Polarity has nothing to do with the internal construction of the transformer windings but only with the routing of leads to the bushings. Polarity only becomes important when transformers are being paralleled or banked. Single-phase polarity is illustrated in Figure 3.11.

3.5.3.2 Three-Phase Angular Displacement

The phase relation of voltage between H_1 and X_1 bushings on a three-phase distribution transformer is referred to as angular displacement. IEEE standards require that wye–wye and delta–delta transformers have 0° displacement. Wye–delta and delta–wye transformers will have X_1 lagging H_1 by 30°. This difference in angular displacement means that care must be taken when the secondaries of three-phase transformers are paralleled. Sometimes the phase difference is used to advantage, such as when supplying power to 12-pulse rectifiers or other specialized loads. European standards permit a wide variety of displacements, the most common being Dy11. This IEC designation is interpreted as delta

www.EngineeringEbooksPdf.com

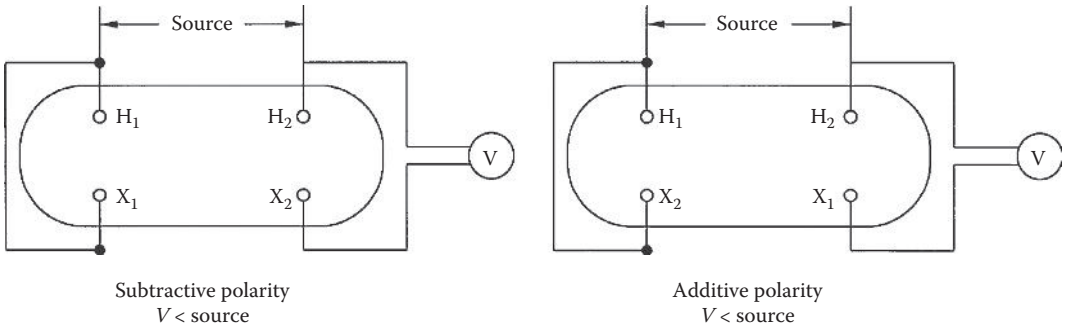

FIGURE 3.11 Single-phase polarity. (Reprinted from IEEE C57.12.90-1999, *IEEE Standard Test Code for Liquid-Immersed Distribution, Power, and Regulating Transformers*, Copyright 1999, Institute of Electrical and Electronics Engineers, Inc. With permission.)

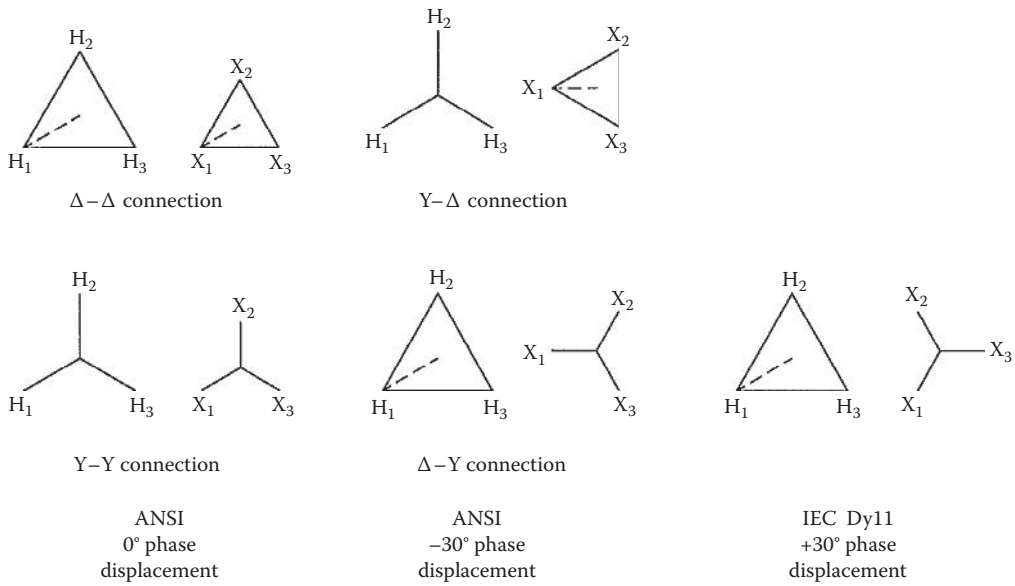

FIGURE 3.12 Three-phase angular displacement. (From IEEE C57.105-1978, *IEEE Guide for Application of Transformer Connections in Three-Phase Distribution Systems*, Copyright 1978, Institute of Electrical and Electronics Engineers, Inc., Piscataway, NJ. Reprinted with the permission of the IEEE. The IEEE disclaims any responsibility or liability resulting from the placement and use in the described manner.)

primary–wye secondary, with X_1 lagging H_1 by $11° \times 30° = 330°$, or leading by 30°. The angular displacement of Dy11 differs from the IEEE angular displacement by 60°. Three-phase angular displacement is illustrated in Figure 3.12.

3.6 Transformer Locations

3.6.1 Overhead

With electric wires being strung at the tops of poles to keep them out of the reach of the general public, it is obvious that transformers would be hung on the same poles, as close as possible to the high-voltage source conductors. Larger units were often placed on overhead platforms in alleyways, or alongside buildings, or on ground-level pads protected by fencing. While overhead construction is still the

www.EngineeringEbooksPdf.com

most economical choice in rural areas, it has the disadvantage of susceptibility to ice and wind storms. Also the public no longer perceives overhead wiring as a sign of progress, instead considering it an eyesore that should be eliminated from view. In some areas, this has lead to most new construction being underground, rather than overhead.

3.6.2 Underground

Larger cities with concentrated commercial loads and tall buildings have had underground primary cables and transformers installed in below-grade ventilated vaults since the early part of the twentieth century. By connecting many transformers into a secondary network, service to highly concentrated loads can be maintained even though a single transformer may fail. In a secondary network, temporary overloads can be shared among all the connected transformers.

The use of underground distribution for light industrial, commercial, and residential service became popular in the 1960s, with the emphasis on beautification that promoted fences around scrap yards and the elimination of overhead electric and telephone lines. The most common construction method for residential electric services is underground primary cables feeding a transformer placed on a pad at ground level. The problems of heat dissipation and corrosion are only slightly more severe than for overheads, but they are substantially reduced compared with transformers confined in below-grade ventilated vaults. Since pad mounts are intended to be placed in locations that are frequented by the general public, the operating utility has to be concerned about security of the locked cabinet covering the primary and secondary connections to the transformer. The industry has established standards for security against unauthorized entry and vandalism of the cabinet and for locking provisions; see IEEE C57.12.28 and IEEE C57.12.29. Another concern is the minimization of sharp corners or edges that may be hazardous to children at play and that also has been addressed by standards. The fact that pad-mounted transformers can operate with surface temperatures near the boiling point of water is a further concern that is voiced from time to time. One argument used to minimize the danger of burns is to point out that it is no more hazardous to touch a hot transformer than it is to touch the hood of an automobile on a sunny day. From a scientific standpoint, research has shown that people will pull away after touching a hot object in a much shorter time than it takes to sustain a burn injury. The point above which persons might be burned is about 150°C (Hayman et al., 1973). See Section 3.8 for a detailed description of underground transformers.

3.6.3 Directly Buried

Through the years, attempts have been made to place distribution transformers directly in the ground without a means of ventilation. A directly buried installation may be desirable because it is completely out of sight and cannot be damaged by windstorms, trucks and automobiles, or lawn mowers. There are three major challenges when directly buried installations are considered: the limited operational accessibility, a corrosive environment, and the challenge of dissipating heat from the transformer. The overall experience has been that heat from a buried transformer tends to dry out earth that surrounds it, causing the earth to shrink and create gaps in the heat-conduction paths to the ambient soil. If a site is found that is always moist, then heat conduction may be assured, but corrosion of the tank or of cable shields is still a major concern. Advances in encapsulation materials and techniques have fostered development of a solid-insulation distribution transformer that can be installed in a ventilated vault or directly buried using thermal backfill materials while maintaining loadability comparable with overhead or pad-mounted transformers. For further information, see Section 3.8.5.3.

3.6.4 Interior Installations

Building codes may completely prohibit the installation of a distribution transformer containing mineral oil inside an occupied building or it may only require that the room be built to a 3 h fire rating.

www.EngineeringEbooksPdf.com

Other options available include use of a dry-type transformer or the replacement of mineral oil with a less-flammable coolant. See Section 3.2.7 regarding coolants.

3.7 Overhead Distribution Transformers

Overhead transformers are self-cooled, liquid-filled, sealed units designed for step-down operation from overhead primary wires. These are the most prevalent type of distribution transformer in North America. They are available in both single- and three-phase designs. These transformers are detailed in IEEE C57.12.20. The coating requirements are detailed in IEEE C57.12.30 for normal and IEEE C57.12.31 for coastal areas. The tanks of overhead transformers used in North America are usually round though some three-phase are made in rectangular tanks. The singe-phase transformers may have one or two primary bushings and usually have three or four secondary bushings. Three-phase overhead transformers have three primary bushings and three or four secondary bushings.

3.8 Underground Distribution Transformers

Underground transformers are self-cooled, liquid-filled, sealed units designed for step-down operation from an underground primary-cable supply. They are available in both single- and three-phase designs. Underground transformers can be separated into three subgroups: those designed for installation in room-like vaults, those designed for installation in surface-operable enclosures, and those designed for installation on a pad at ground level.

3.8.1 Vault Installations

The vault provides the required ventilation, access for operation, maintenance, and replacement, while at the same time providing protection against unauthorized entry. Vaults used for transformer installations are large enough to allow personnel to enter the enclosure, typically through a manhole and down a ladder. Vaults are typically rated as "confined spaces" and have special operating practices to deal with the increased work hazard. Vaults have been used for many decades, and it is not uncommon to find installations that date back to the early part of the twentieth century when only paper-and-lead-insulated primary cable was available. Transformers for vault installations are typically designed for radial application and have a separate fuse installation on their source side.

Vaults can incorporate many features:

- Removable top sections for transformer replacement
- Automatic sump pumps to keep water levels down
- Chimneys to increase natural air flow
- Forced-air circulation

Transformers for vault installation are manufactured as either subway transformers or as vault-type transformers, which, according to IEEE C57.12.40, are defined as follows:

- Vault-type transformers are suitable for occasional submerged operation.
- Subway transformers are suitable for frequent or continuous submerged operation.

From the definitions, the vault-type transformer should only be used when a sump pump is installed, while the subway-type could be installed without a sump pump. The principal distinction between vault-type and subway transformers is their corrosion resistance. For example, the network transformer standard, IEEE C57.12.40, requires increased corrosion of subway transformers in comparison to vault-type transformers. In utility application, vault and subway types may be installed in the same type of enclosure, and the use of a sump pump is predicated more on the need for quick access for operations than it is on whether the transformer is a vault or subway type.

www.EngineeringEbooksPdf.com

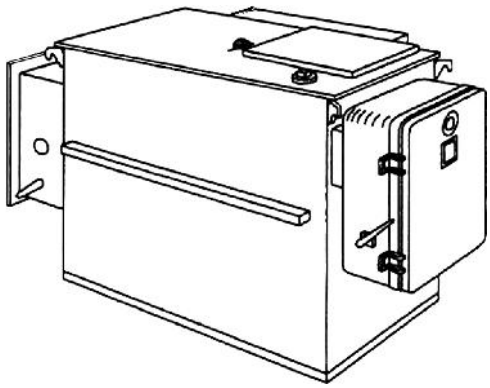

FIGURE 3.13 Network transformer with protector. (By permission of Pacific Gas and Electric Company, San Francisco, CA.)

3.8.1.1 Transformers for Vault Installation

3.8.1.1.1 Network Transformers

As defined in IEEE C57.12.80, network transformers (see Figure 3.13) are designed for use in vaults to feed a variable-capacity system of interconnected secondaries. Typically they are three-phase transformers that are designed to connect through a network protector to a secondary network system. Network transformers are usually applied to serve loads in the downtown areas of a major city. National standard IEEE C57.12.40 provides details for network transformers. The standard kVA ratings are 300, 500, 750, 1000, 1500, 2000, and 2500 kVA. The primary voltages range from 2,400 to 34,500 V. The secondary voltages are 216Y/125 or 480Y/277.

Network transformers are built as either vault type or subway type. They typically incorporate a primary switch with open, closed, and ground positions. Primary cable entrances are made by one of the following methods:

1. Wiping sleeves or entrance fittings for connecting to lead cables—either one three-conductor or three single-conductor fittings or sleeves
2. Bushing wells or integral bushings for connecting to plastic cables—three wells or three bushings

3.8.1.1.2 Network Protectors

Although not a transformer, the network protector is associated with the network transformer. The protector is an automatic switch that connects and disconnects the transformer from the secondary network being served. The protector connects the transformer when power flows from the primary circuit into the secondary network, and it disconnects on reverse power flow from the secondary to the primary. The protector is described in IEEE C57.12.44. The protector is typically mounted on the secondary throat of the network transformer, as shown in Figure 3.13.

3.8.1.1.3 Single-Phase Subway or Vault Types

These are round single-phase transformers designed to be installed in a vault and capable of being banked together to provide three-phase service (Figure 3.14). These can be manufactured as either subway-type or vault-type transformers. They are typically applied to serve small- to medium-sized commercial three-phase loads or mixed residential and small commercial loads. The standard kVA ratings are 25, 37.5, 50, 75, 100, 167, and 250 kVA. Primary voltages range from 2,400 to 34,500 V, with the secondary voltage usually being 120/240. Four secondary bushings allow the secondary windings to be connected in parallel for wye connections or in series for delta connections. The secondary can be

www.EngineeringEbooksPdf.com

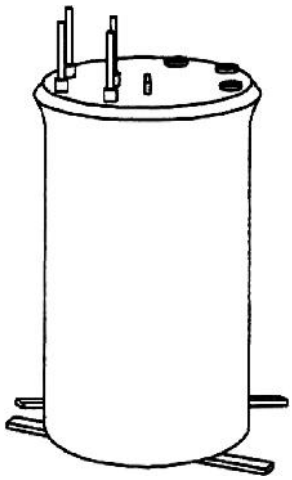

FIGURE 3.14 Single-phase subway. (By permission of Pacific Gas and Electric Company, San Francisco, CA.)

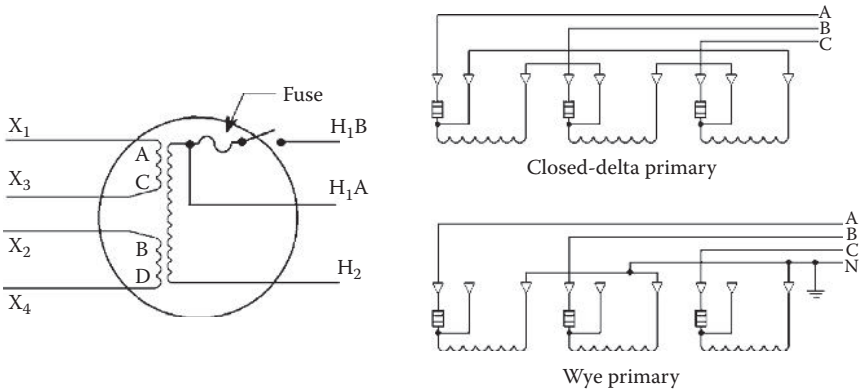

FIGURE 3.15 Three-bushing subway. (By permission of Pacific Gas and Electric Company, San Francisco, CA.)

either insulated cables or spades. The units are designed to fit through the utilities standard manhole diameter. They are not specifically covered by a national standard; however, they are very similar to the units in IEEE C57.12.23. Units with three primary bushings or wells, and with an internal primary fuse (Figure 3.15), allow for connection in closed-delta, wye, or open-wye banks. They can also be used for single-phase phase-to-ground connections.

Units with two primary bushings or wells and with two internal primary fuses (Figure 3.16) allow for connection in an open-delta or an open-wye bank. This construction also allows for single-phase line-to-line connections.

3.8.1.1.4 Three-Phase Subway or Vault Types

These are rectangular-shaped three-phase transformers that can be manufactured as either subway type or vault type. Figure 3.17 depicts a three-phase vault-type transformer. These are usually used to supply large three-phase commercial loads. Typically they have primary-bushing well terminations on one of the small sides and the secondary bushings with spades on the opposite end. These are also designed for radial installation and require external fusing. They can be manufactured in any of the standard three-phase kVA sizes and voltages. They are not detailed in a national standard.

www.EngineeringEbooksPdf.com

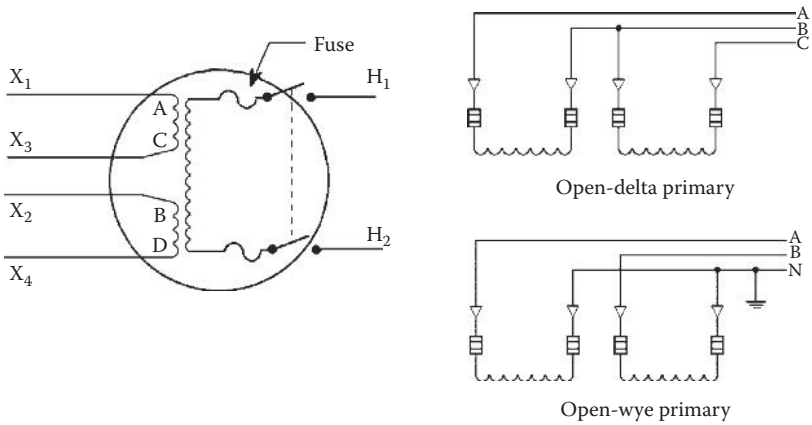

FIGURE 3.16 Two-bushing subway. (By permission of Pacific Gas and Electric Company, San Francisco, CA.)

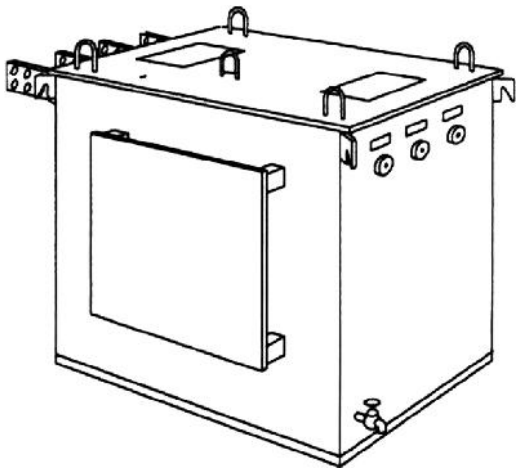

FIGURE 3.17 Three-phase vault. (By permission of Pacific Gas and Electric Company, San Francisco, CA.)

3.8.2 Surface-Operable Installations

Surface-operable installations are designed to be hot-stick operable by a person standing at ground level at the edge of the enclosure. The enclosure has grade-level covers that can be removed to gain access to the equipment. The subsurface enclosure provides the required ventilation as well as access for operation, maintenance, and replacement, while at the same time providing protection against unauthorized entry. The enclosures typically are just large enough to accommodate the largest size of transformer and allow for proper cable bending. Transformers for installation in surface-operable enclosures are manufactured as submersible transformers, which are defined in IEEE C57.12.80 as "so constructed as to be successfully operable when submerged in water under predetermined conditions of pressure and time." These transformers are designed for loop application and thus require internal protection. Submersible transformers are designed to be connected to an underground distribution system that utilizes 200 A class equipment. The primary is most often #2 or 1/0 cables with 200 A elbows. While larger cables such as 4/0 can be used with the 200 A elbows, it is not recommended. The extra stiffness of 4/0 cable makes it very difficult to avoid putting strain on the elbow–bushing interface, which may lead to early failure. The operating points of the transformer are arranged on or near the transformer cover. There are three typical variations of submersible transformers.

www.EngineeringEbooksPdf.com

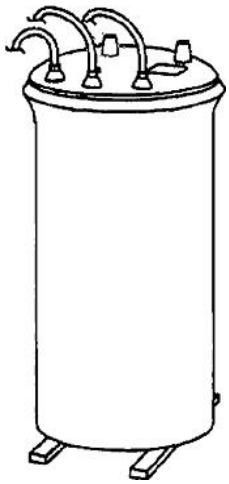

FIGURE 3.18 Single-phase round. (By permission of Pacific Gas and Electric Company, San Francisco, CA.)

3.8.2.1 Single-Phase Round Submersible

Single-phase round transformers (Figure 3.18) have been used since the early 1960s. These transformers are typically applied to serve residential single-phase loads. These units are covered by IEEE C57.12.23. They are manufactured in the normal single-phase kVA ratings of 25, 37.5, 50, 75, 100, and 167 kVA. Primary voltages are available from 2,400 through 24,940 GrdY/14,400, and the secondary is 240/120 V. They are designed for loop-feed operation with a 200 A internal bus connecting the two bushings. Three low-voltage cable leads are provided through 100 kVA, while the 167 kVA size has six. They commonly come in two versions—a two-primary-bushing unit (Figure 3.19) and a four-primary-bushing unit (Figure 3.20)—although only the first is detailed in the standard. The two-bushing unit is for phase-to-ground-connected transformers, while the four-bushing unit is for phase-to-phase-connected transformers.

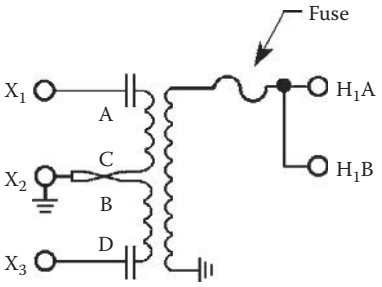

FIGURE 3.19 Two-primary bushing. (By permission of Pacific Gas and Electric Company, San Francisco, CA.)

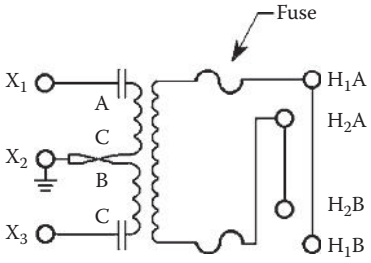

FIGURE 3.20 Four-primary bushing. (By permission of Pacific Gas and Electric Company, San Francisco, CA.)

www.EngineeringEbooksPdf.com

As these are designed for application where the primary continues after feeding through the transformer, the transformers require internal protection.

Protection options include

- Dry-well current-limiting fuse with an interlocked switch to prevent the fuse from being removed while energized
- Submersible bayonet fuse with backup, under-oil, partial-range current-limiting (PRCL) fuses, or with backup internal nonreplaceable primary-expulsion fuse elements
- Secondary circuit breaker and an internal, replaceable, primary-expulsion fuse element

These units are designed for installation in a 42 or 48 in. diameter round enclosure. Enclosures have been made of fiberglass or concrete. Installations have been made with and without a solid bottom. Those without a solid bottom simply rest on a gravel base.

3.8.2.2 Single-Phase Horizontal Submersible

Functionally, single-phase horizontal submersible transformers are the same as the round single-phase. However, they are designed to be installed in a rectangular enclosure, as shown in Figure 3.21. Three low-voltage cable leads are provided through 100 kVA, while the 167 kVA size has six. They are manufactured in both four-primary-bushing designs (Figure 3.22) and in six-primary-bushing designs (Figure 3.23). As well as the normal single-phase versions, there is also a duplex version. This is used to supply four-wire, three-phase, 120/240 V services from two core-coil assemblies connected as open-delta on the secondary side. The primary can be either open-delta or open-wye. Horizontal transformers also have been in use since the early 1960s. These units are not specifically covered by a national standard. The enclosures used have included treated plywood, fiberglass, and concrete. The plywood and fiberglass enclosures are typically bottomless, with the transformer resting on a gravel base.

3.8.2.3 Three-Phase Submersible

The three-phase surface-operable units are detailed in IEEE C57.12.24. Typical application for these transformers is to serve three-phase commercial loads from loop-feed primary underground cables. Primary voltages are available from 2,400 through 34,500 V. The standard three-phase kVA ratings from 75 to 1000 kVA are available with secondary voltage of 208Y/120 V. With a 480Y/277 V secondary, the available sizes are 75–2500 kVA. Figure 3.24 depicts a three-phase submersible.

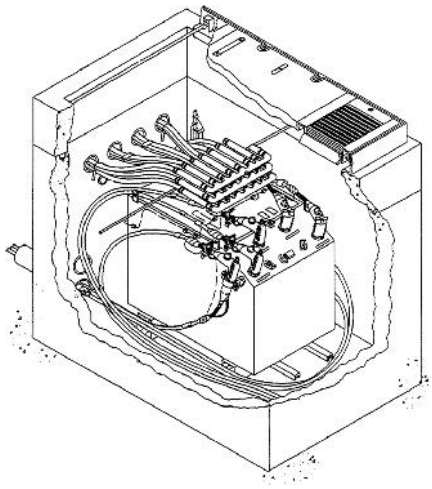

FIGURE 3.21 Four-bushing horizontal installed. (By permission of Pacific Gas and Electric Company, San Francisco, CA.)

www.EngineeringEbooksPdf.com

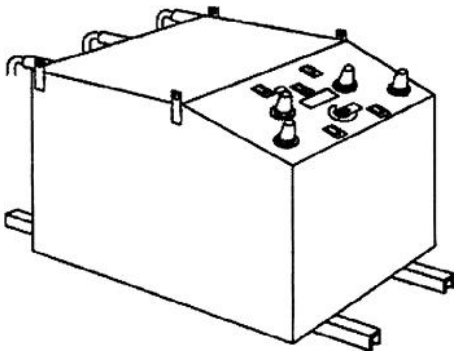

FIGURE 3.22 Four-bushing horizontal. (By permission of Pacific Gas and Electric Company, San Francisco, CA.)

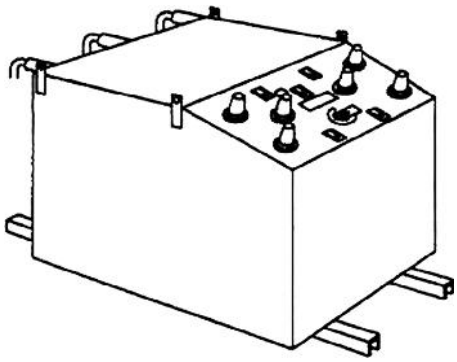

FIGURE 3.23 Six-bushing horizontal. (By permission of Pacific Gas and Electric Company, San Francisco, CA.)

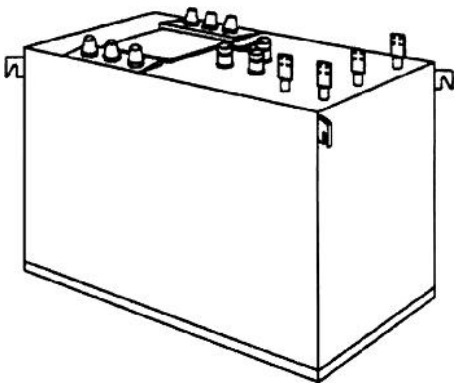

FIGURE 3.24 Three-phase submersible. (By permission of Pacific Gas and Electric Company, San Francisco, CA.)

Protection options include

- Dry-well current-limiting fuses with an interlocked switch to prevent the fuses from being removed while energized
- Submersible bayonet fuses with backup, under-oil, PRCL fuses, or with backup internal nonreplaceable primary-expulsion fuse elements

These are commonly installed in concrete rectangular boxes with removable cover sections.

www.EngineeringEbooksPdf.com

3.8.3 Vault and Subsurface Common Elements

3.8.3.1 Tank Material

The substrate and coating should meet the requirements detailed in IEEE C57.12.32. The transformers can be constructed out of 400-series or 300-series stainless steels or out of mild carbon steel. In general, 300-series stainless steel outperforms 400-series stainless steel, which significantly outperforms mild carbon steel. Most of the small units are manufactured out of 400-series stainless steel since it is significantly less expensive than 300-series. Stainless steels from the 400-series with a good coating have been found to give satisfactory field performance. Stainless steel in the 400-series is not available in sheets large enough to make many of the three-phase transformers. That leaves the choice of mild steel or 300-series stainless. This was cost prohibitive in the past, but more recently, the cost differential has decreased leading some utilities to use nothing but stainless steel in their subsurface units.

3.8.3.2 Temperature Rating

By the IEEE standards, the kVA ratings are based on not exceeding an average winding-temperature rise of 55°C and a hottest-spot temperature rise of 70°C. However, they are constructed with the same 65°C rise insulation systems used in overhead and pad-mounted transformers. This gives a 10°C cushion to account for possible obstruction and reduced ventilation. Utilities commonly restrict loading on underground units to a lower limit than they do with pad-mounted or overhead units.

3.8.3.3 Siting

Subsurface units should not be installed if any of the following conditions apply:

- Soil is severely corrosive.
- Heavy soil erosion occurs.
- High water table causes repeated flooding of the enclosures.
- Heavy snowfall occurs.
- Severe mosquito problem exists.

3.8.3.4 Maintenance

Maintenance mainly consists of keeping the air vents free of foreign material, sump pumps operating and removing whatever has been dumped or washed into the enclosure or vault. Dirt allowed to stay packed against the tank can lead to accelerated anaerobic corrosion, resulting in tank puncture and loss of mineral oil.

3.8.4 Transformers inside Buildings

Utility transformers are sometimes installed in a room inside a building. This, of course, requires a specially designed room to limit exposure to fire and access by unauthorized personnel and to provide sufficient ventilation. Both mineral-oil-filled units and units with one of the less-flammable insulating oils are used in these installations. See Section 3.2.7 regarding coolants. These installations are typically made with transformers designed for vault installation, pad-mounted transformers, or with dry-type transformers.

3.8.5 Emerging Issues

3.8.5.1 Water Pumping

Pumping of water from subsurface enclosures has been increasingly regulated. In some areas, water with any oily residue or turbidity must be collected for hazardous-waste disposal. Subsurface and vault enclosures are often subject to runoff water from streets. This water can include oily residue from vehicles. So even without a leak from the equipment, water collected in the enclosure may be judged a hazardous waste.

www.EngineeringEbooksPdf.com

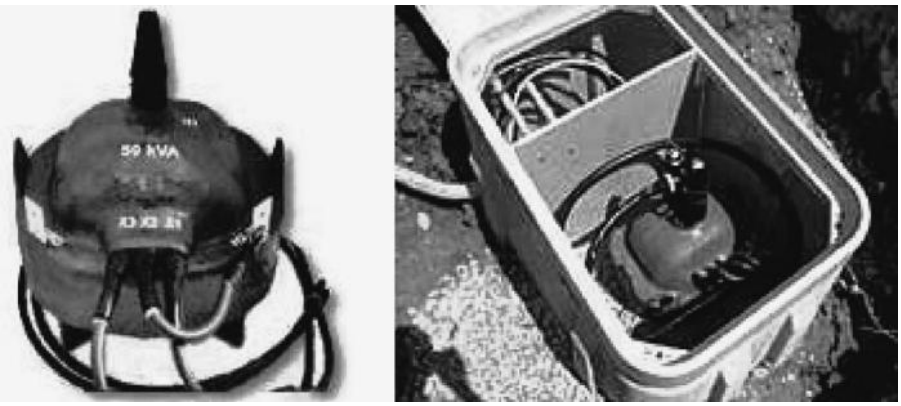

FIGURE 3.25 Solid-insulation distribution transformer. (By permission of ABB Inc., Montreal, Quebec, Canada.)

3.8.5.2 West Nile Virus

Subsurface enclosures can provide breeding grounds for mosquitoes. With the spread of the West Nile virus, this can be a concern with local governmental agencies.

3.8.5.3 Solid Insulation

Transformers with solid insulation are commercially available for subsurface distribution applications (see Figure 3.25) with ratings up 167 kVA single-phase and 500 kVA three-phase. The total encapsulation of what is essentially a dry-type transformer allows it to be applied in a subsurface environment (direct buried or in a subsurface vault). The solid insulation distribution transformer addresses problems often associated with underground and direct buried transformers. See Sections 3.6.2 and 3.6.3. Such installations can be out of sight, below grade, and not subject to corrosion and contamination.

3.9 Pad-Mounted Distribution Transformers

Pad-mounted transformers are the most commonly used type of transformer for serving loads from underground-distribution systems. They offer many advantages over subsurface, vault, or subway transformers. Some of these are listed as follows:

- Installation: less expensive to purchase and easier to install.
- Maintenance: easier to maintain.
- Operability: easier to find, less time to open and operate.
- Loading: utilities often assign higher loading limits to pad-mounted transformers as opposed to surface-operable or vault units.

Many users and suppliers break distribution transformers into just two major categories—overhead and underground, with pad-mounted transformers included in the underground category. The IEEE standards, however, divide distribution transformers into three categories—overhead, underground, and pad mounted.

Pad-mounted transformers are manufactured as either of the following:

- Single-phase or three-phase units: single-phase units are designed to transform only one phase. Three-phase units transform all three phases. Most three-phase transformers use one three-, four-, or five-legged core structure, although duplex or triplex construction is used on occasion.
- Loop or radial units: loop-style units have the capability of terminating two primary conductors per phase. Radial-style units can only terminate one primary cable per phase. At a radial-style unit, the primary must end, but from a loop style, it can continue to serve other units.

www.EngineeringEbooksPdf.com

- Live-front or dead-front units: live-front units have the primary cables terminated in a stress cone supported by a bushing. Thus the primary has exposed energized metal, or "live" parts. Dead-front units use primary cables that are terminated with high-voltage separable insulated connectors. Thus the primary has all "dead" parts—no exposed metal energized at primary voltages.

3.9.1 Single-Phase Pad-Mounted Transformers

Single-phase pad-mounted transformers are usually applied to serve residential loads. Most single-phase transformers are manufactured as clamshell, dead front, loop type with an internal 200 A primary bus designed to allow the primary to loop through and continue to feed the next transformer. These are detailed in the IEEE C57.12.38. The standard assumes that the residential subdivision is served by a one-wire primary extension. It details two terminal arrangements for loop-feed systems: Type 1, the straight feed, shown in Figure 3.26, and Type 2, the cross-feed, shown in Figure 3.27. Both have two

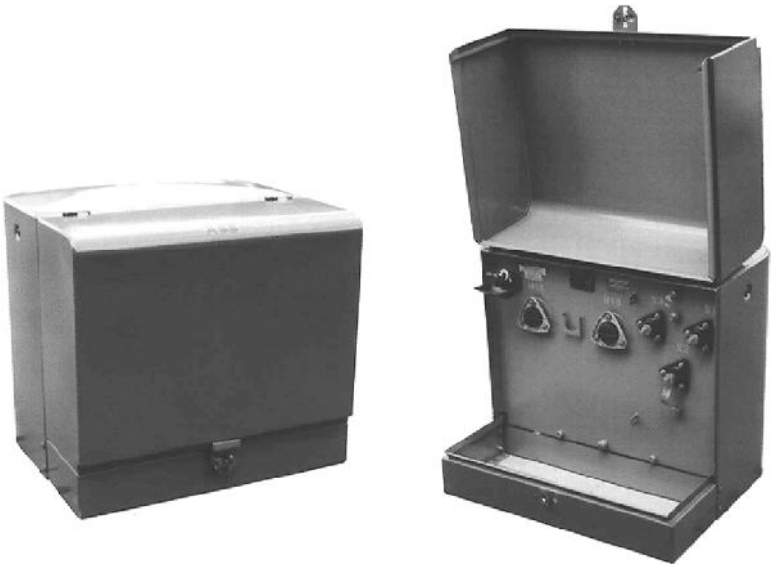

FIGURE 3.26 Typical Type 1 loop-feed system. (By permission of ABB Inc., Raleigh, NC.)

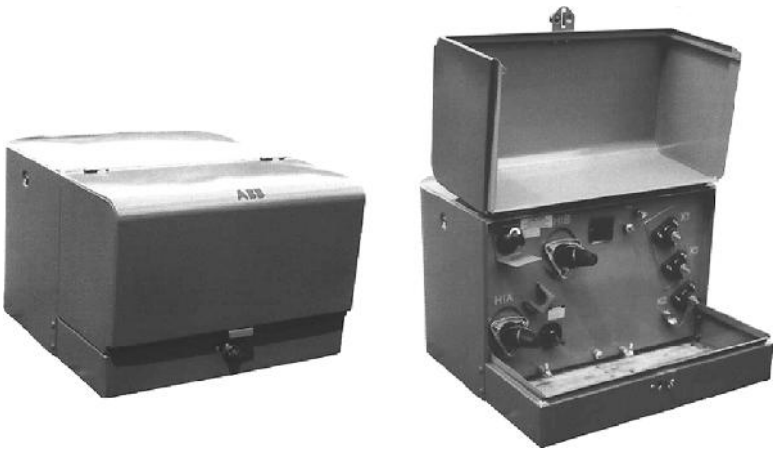

FIGURE 3.27 Typical Type 2 loop-feed system. (By permission of ABB Inc., Raleigh, NC.)

www.EngineeringEbooksPdf.com

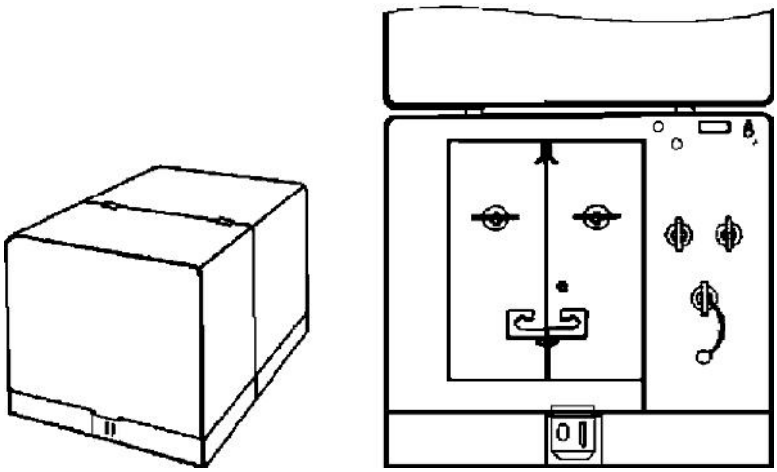

FIGURE 3.28 Single-phase live front. (By permission of Pacific Gas and Electric Company, San Francisco, CA.)

primary bushings and three secondary bushings. The primary is always on the left, when facing the transformer bushings with the cabinet hood open, and the secondary is on the right. There is no barrier or division between the primary and secondary. In the Type 1 units, both primary and secondary cables rise directly up from the pad. In Type 2 units, the primary rises from the right and crosses the secondary cables that rise from the left. Type 2 units can be shorter than the Type 1 units since the crossed cable configuration gives enough free cable length to operate the primary elbow terminations without requiring the bushing to be placed as high. Although not detailed in the national standard, there are units built with four and with six primary bushings. Four-bushing units are required for single-phase lines on systems without a neutral conductor where transformers are connected phase-to-phase. The six-primary-bushing units are used to supply single-phase loads from three-phase taps. Terminating all of the phases in the transformer allows all of the phases to be sectionalized at the same location. The internal single-phase transformer can be connected either phase-to-phase or phase-to-ground. The six-bushing units also allow the construction of duplex pad-mounted units that can be used to supply small three-phase loads along with the normal single-phase residential load. In those cases, the service voltage is four-wire, three-phase, 120/240 V.

Cabinets for single-phase transformers are typically built in the clamshell configuration with one large door that swings up, as shown in Figures 3.26 and 3.27. Older units were manufactured with two doors, similar to the three-phase cabinets. New installations are almost universally dead front; however, live-front units (see Figure 3.28) are still purchased for replacements. These units are also built with clamshell cabinets but have an internal box-shaped insulating barrier constructed around the primary connections.

3.9.2 Three-Phase Pad-Mounted Transformers

Three-phase pad-mounted transformers are typically applied to serve commercial and industrial three-phase loads from underground distribution systems. Both the live-front and the dead-front pad-mounted transformers are detailed in IEEE C57.12.34.

3.9.2.1 Live Front

Live-front transformers are specified as radial units and thus do not come with any fuse protection. See Figure 3.29. The primary compartment is on the left and the secondary compartment is on the right, with a rigid barrier separating them. The secondary door must be opened before the primary

www.EngineeringEbooksPdf.com

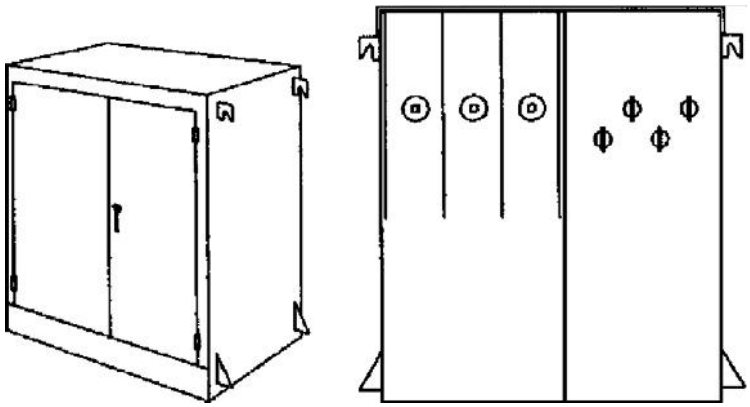

FIGURE 3.29 Radial-style live front. (By permission of Pacific Gas and Electric Company, San Francisco, CA.)

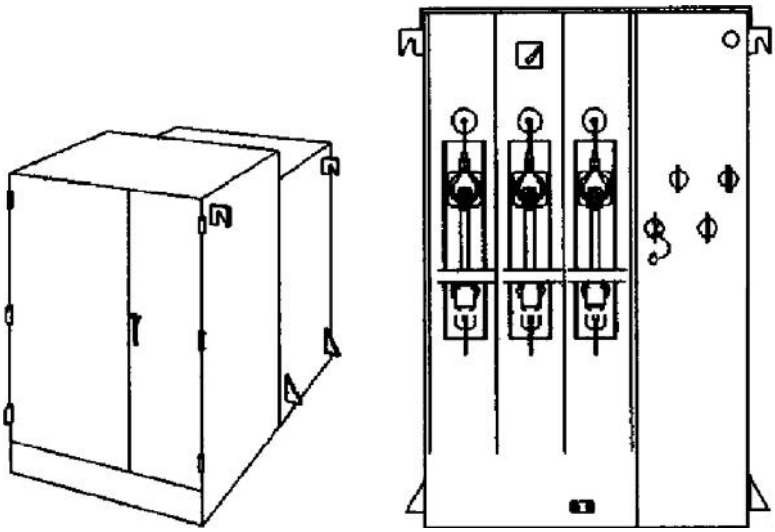

FIGURE 3.30 Loop-style live front. (By permission of Pacific Gas and Electric Company, San Francisco, CA.)

door can be opened. Stress-cone-terminated primary cables rise vertically and connect to the terminals on the end of the high-voltage bushings. Secondary cables rise vertically and are terminated on spades connected to the secondary bushings. Units with a secondary of 208Y/120 V are available up to 1000 kVA. Units with a secondary of 480Y/277 V are available up to 2500 kVA.

Although not detailed in a national standard, there are many similar types available. A loop-style live front (Figure 3.30) can be constructed by adding fuses mounted below the primary bushings. Two primary cables are then both connected to the bottom of the fuse. The loop is then made at the terminal of the high-voltage bushing, external to the transformer but within its primary compartment.

3.9.2.2 Dead Front

Both radial- and loop-feed dead-front pad-mounted transformers are detailed in the standard. Radial-style units have three primary bushings arranged horizontally, as seen in Figure 3.31. Loop-style units have six primary bushings arranged in a V pattern, as seen in Figures 3.32 and 3.33. In both, the primary compartment is on the left, and the secondary compartment is on the right, often with a rigid barrier between them. The secondary door must be opened before the primary door can be opened. The primary cables

www.EngineeringEbooksPdf.com

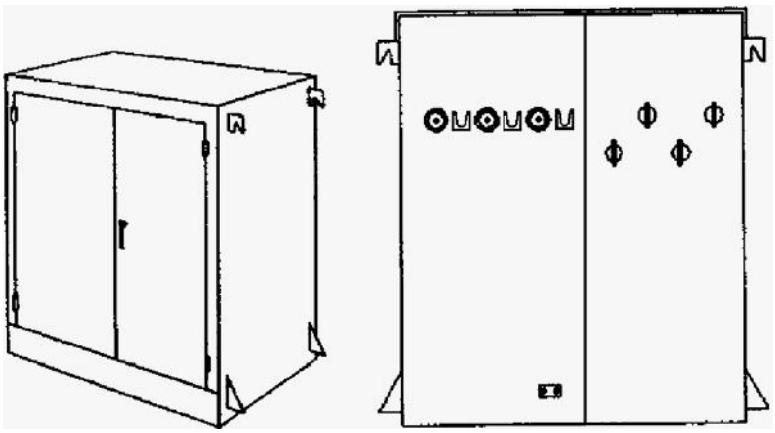

FIGURE 3.31 Radial-style dead front. (By permission of Pacific Gas and Electric Company, San Francisco, CA.)

FIGURE 3.32 Small loop-style dead front. (By permission of ABB Inc., Raleigh, NC.)

FIGURE 3.33 Large loop-style dead front. (By permission of ABB Inc., Raleigh, NC.)

are terminated with separable insulated high-voltage connectors, commonly referred to as 200 A elbows, specified in IEEE 386. These plug onto the primary bushings, which can be either bushing wells with an insert or integral bushings. Many users prefer bushing wells with inserts as many elbow failures also damage the bushing. With inserts, both the insert and elbow can easily be replaced. Units with a secondary of 208Y/120 V are available up to 1000 kVA. Units with a secondary of 480Y/277 V are available up to 3750 kVA.

3.9.2.3 Additional Ratings

In addition to what is shown in the national standards, there are other variations available. The smallest size in the national standards is the 75 kVA unit. However, 45 kVA units are also manufactured in the normal secondary voltages. Units with higher secondary voltages, such as 2400 and 4160Y/2400, are

www.EngineeringEbooksPdf.com

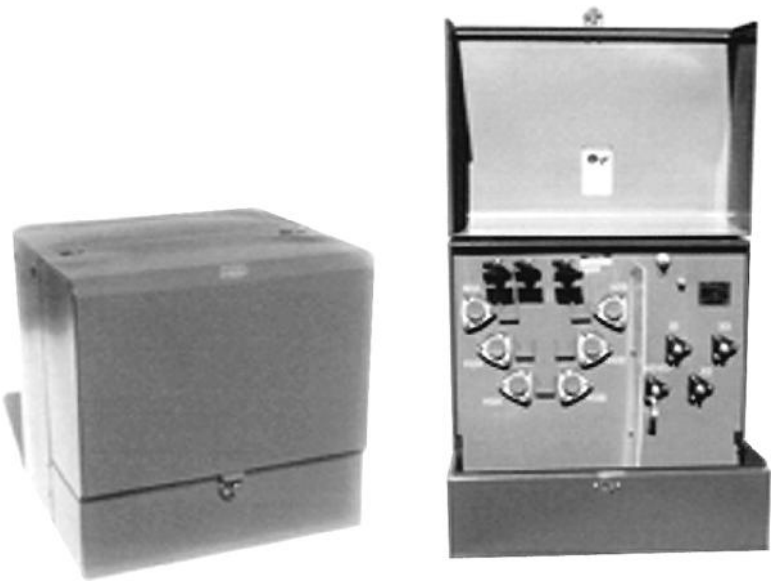

FIGURE 3.34 Mini three-phase in clamshell cabinet. (By permission of ABB Inc., Raleigh, NC.)

manufactured in larger kVA sizes. There is also a style being produced that is a cross between single- and three-phase units. A small three-phase transformer is placed in a six-bushing loop-style clamshell cabinet, as seen in Figure 3.34. These are available from 45 to 150 kVA in both 208Y/120 and 480Y/277 V secondaries.

3.9.3 Pad-Mount Common Elements

3.9.3.1 Protection

Most distribution transformers include some kind of primary overcurrent protection. For a detailed discussion, see Section 3.14.

3.9.3.2 Primary Conductor

Pad-mounted transformers are designed to be connected to an underground distribution system that utilizes 200 A class equipment. The primary is most often #2 or 1/0 cables with 200 A elbows or stress cones. It is recommended that larger cables such as 4/0 not be used with the 200 A elbows. The extra stiffness of 4/0 cable makes it very difficult to avoid putting strain on the elbow–bushing interface which can lead to premature elbow failures.

3.9.3.3 Pad

Pads are made out of various materials. The most common is concrete, which can be either poured in place or precast. Concrete is suitable for any size pad. Pads for single-phase transformers are also commonly made out of fiberglass or polymer concrete.

3.9.3.4 Enclosure

There are two national standards that specify the requirements for enclosure integrity for pad-mounted equipment: IEEE C57.12.28 for normal environments and IEEE C57.12.29 for coastal environments. The tank and cabinet of pad-mounted transformers are commonly manufactured out of mild carbon steel. When applied in corrosive areas, such as near the ocean, they are commonly

www.EngineeringEbooksPdf.com

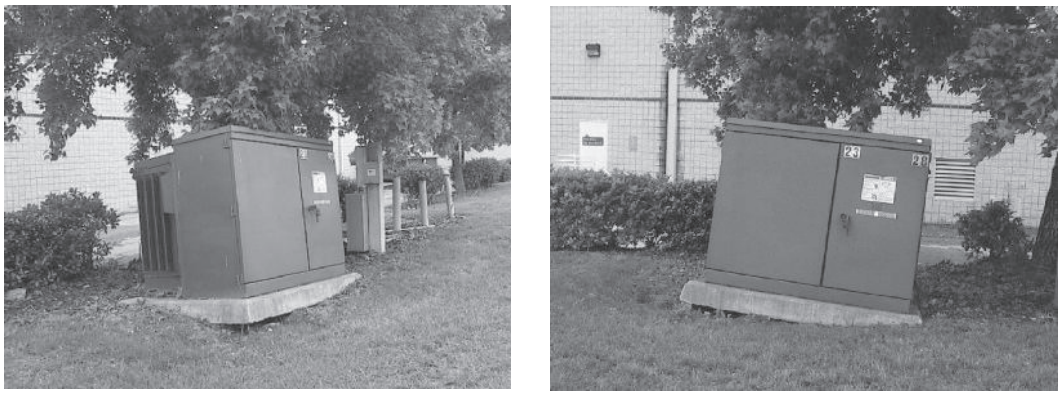

(a) (b)

FIGURE 3.35 Tilting pad-mount transformer (a) Side view and (b) Front view.

made out of 300- or 400-series stainless steel. In general, 300-series stainless steel will outperform 400-series stainless steel, which significantly outperforms mild carbon steel in corrosive applications.

3.9.3.5 Maintenance

Maintenance mainly consists of keeping the enclosure rust-free and in good repair so that it remains tamper resistant, that is, capable of being closed and locked so that it resists unauthorized entry.

3.9.3.6 Temperature Rating

The normal temperature ratings are used. The kVA ratings are based on not exceeding an average winding-temperature rise of 65°C and a hottest-spot temperature rise of 80°C over a daily average ambient of 30°C.

3.9.3.7 Tilting

Pad-mounted transformers are initially installed level; however, they can tilt after installation due to soil movement. Figure 3.35 shows a pad-mounted transformer as found in the field. The question that arises is when does this need to be corrected? The answer is not simple. A stable tilt may require no action, while an increasing tilt will require action at some point. If strain is being placed on a bushing by stretched cables, then action is needed. Internally, the core/coil assembly needs to remain under oil as does any operable component such as switches and fuses. Unfortunately, it is not easy task to determine the allowed maximum angle of tilt.

3.10 Transformer Losses

3.10.1 No-Load Loss and Exciting Current

When alternating voltage is applied to a transformer winding, an alternating magnetic flux is induced in the core. The alternating flux produces hysteresis and eddy currents within the electrical steel, causing heat to be generated in the core. Heating of the core due to applied voltage is called no-load loss. Other names are iron loss or core loss. The term "no-load" is descriptive because the core is heated regardless of the amount of load on the transformer. If the applied voltage is varied, the no-load loss is very roughly proportional to the square of the peak voltage, as long as the core is not taken into saturation. The current that flows when a winding is energized is called the "exciting current" or "magnetizing current," consisting of a real component and a reactive component. The real component delivers power for no-load losses in the core. The reactive current delivers no power but represents energy momentarily

www.EngineeringEbooksPdf.com

stored in the winding inductance. Typically, the exciting current of a distribution transformer is less than 0.5% of the rated current of the winding that is being energized.

3.10.2 Load Loss

A transformer supplying load has current flowing in both the primary and secondary windings that will produce heat in those windings. Load loss is divided into two parts, I^2R loss and stray losses.

3.10.2.1 I^2R Loss

Each transformer winding has an electrical resistance that produces heat when load current flows. Resistance of a winding is measured by passing direct current (dc) through the winding to eliminate inductive effects.

3.10.2.2 Stray Losses

When ac is used to measure the losses in a winding, the result is always greater than the I^2R measured with dc. The difference between dc and ac losses in a winding is called "stray loss." One portion of stray loss is called "eddy loss" and is created by eddy currents circulating in the winding conductors. The other portion is generated outside of the windings, in frame members, tank walls, bushing flanges, etc. Although these are due to eddy currents also, they are often referred to as "other strays." The generation of stray losses is sometimes called "skin effect" because induced eddy currents tend to flow close to the surfaces of the conductors. Stray losses are proportionally greater in larger transformers because their higher currents require larger conductors. Stray losses tend to be proportional to current frequency, so they can increase dramatically when loads with high-harmonic currents are served. The effects can be reduced by subdividing large conductors and by using stainless steel or other nonferrous materials for frame parts and bushing plates.

3.10.3 Harmonics and DC Effects

Rectifier and discharge-lighting loads cause currents to flow in the distribution transformer that are not pure power-frequency sine waves. Using Fourier analysis, distorted load currents can be resolved into components that are integer multiples of the power frequency and thus are referred to as harmonics. Distorted load currents are high in the 3rd, 5th, 7th, and sometimes the 11th and 13th harmonics, depending on the character of the load.

3.10.3.1 Odd-Ordered Harmonics

Load currents that contain the odd-numbered harmonics will increase both the eddy losses and other stray losses within a transformer. If the harmonics are substantial, then the transformer must be derated to prevent localized and general overheating. Transformers with load current containing more than 5% total harmonic distortion should be loaded according to IEEE C57.110.

3.10.3.2 Even-Ordered Harmonics

Analysis of most harmonic currents will show very low amounts of even harmonics (second, fourth, sixth, etc.). Components that are even multiples of the fundamental frequency generally cause the waveform to be nonsymmetrical about the zero-current axis. The current therefore has a zeroth harmonic or dc-offset component. The cause of a dc offset is usually found to be half-wave rectification due to a defective rectifier or other component. The effect of a significant dc offset is to drive the transformer core into saturation on alternate half cycles. When the core saturates, exciting current can be extremely high, which can then burn out the primary winding in a very short time. Transformers that are experiencing dc-offset problems are usually noticed because of objectionably loud noise coming from the core structure. Industry standards are not clear regarding the limits of

www.EngineeringEbooksPdf.com

dc offset on a transformer. A recommended value is a dc no larger than the normal exciting current, which is usually 1% or less of a winding's rated current (Galloway, 1993).

3.11 Transformer Performance Model

A simple model will be developed to help explain performance characteristics of a distribution transformer, namely, impedance, short-circuit current, regulation, and efficiency.

3.11.1 Schematic

A simple two-winding transformer is shown in the schematic diagram of Figure 3.36. A primary winding of N_p turns is on one side of a ferromagnetic core loop, and a similar coil having N_s turns is on the other. Both coils are wound in the same direction with the starts of the coils at H_1 and X_1, respectively. When an alternating voltage V_p is applied from H_2 to H_1, an alternating magnetizing flux φ_m flows around the closed core loop. A secondary voltage $V_s = V_p \times N_s/N_p$ is induced in the secondary winding and appears from X_2 to X_1 and very nearly in phase with V_p. With no load connected to X_1–X_2, I_p consists of only a small current called the magnetizing current. When load is applied, current I_s flows out of terminal X_1 and results in a current $I_p = I_s \times N_s/N_p$ flowing into H_1 in addition to magnetizing current. The ampere-turns of flux due to current $I_p \times N_p$ cancels the ampere-turns of flux due to current $I_s \times N_s$, so only the magnetizing flux exists in the core for all the time the transformer is operating normally.

3.11.2 Complete Equivalent Circuit

Figure 3.37 shows a complete equivalent circuit of the transformer. An ideal transformer is inserted to represent the current- and voltage-transformation ratios. A parallel resistance and inductance representing the magnetizing impedance are placed across the primary of the ideal transformer. Resistance and inductance of the two windings are placed in the H_1 and X_1 legs, respectively.

3.11.3 Simplified Model

To create a simplified model, the magnetizing impedance has been removed, acknowledging that no-load loss is still generated and magnetizing current still flows, but it is so small that it can be ignored when compared with the rated currents. The R and X values in either winding can be translated to the

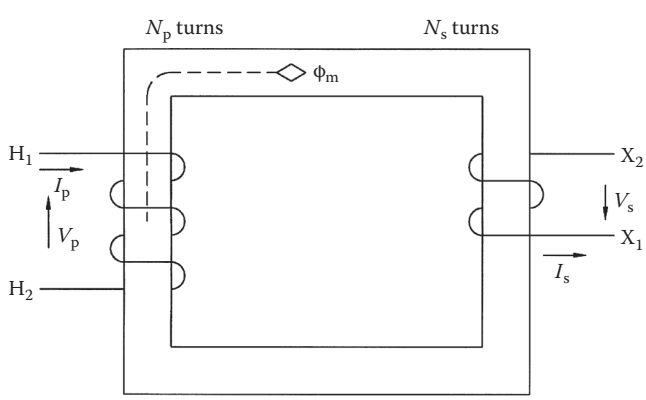

FIGURE 3.36 Two-winding transformer schematic. (By permission of ABB Inc., Jefferson City, MO.)

www.EngineeringEbooksPdf.com

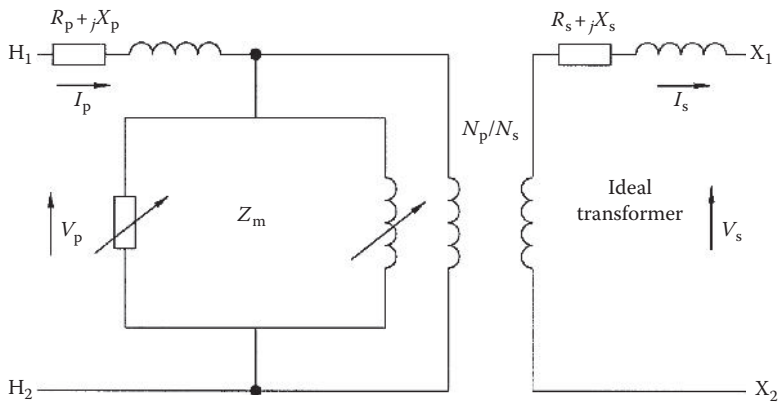

FIGURE 3.37 Complete transformer equivalent circuit. (By permission of ABB Inc., Jefferson City, MO.)

other side by using percent values or by converting ohmic values with a factor equal to the turns ratio squared $(N_p/N_s)^2$. To convert losses or ohmic values of R and X to percent, use Equation 3.1 or 3.2:

$$\%R = \frac{\text{load loss}}{10\,\text{kVA}} = \frac{\Omega_{(R)}\,\text{kVA}}{\text{kV}^2} \tag{3.1}$$

$$\%X = \frac{\text{AW}}{10\,\text{kVA}} = \frac{\Omega_{(L)}\,\text{kVA}}{\text{kV}^2} \tag{3.2}$$

where AW is apparent watts, or the scalar product of applied voltage and exciting current in units of amperes. Once the resistances and inductances are translated to the same side of the transformer, the ideal transformer can be eliminated and the percent values of R and X combined. The result is the simple model shown in Figure 3.38. A load, having power factor cos θ, may be present at the secondary.

3.11.4 Impedance

The values of $\%R$ and $\%X$ form the legs of what is known as the "impedance triangle." The hypotenuse of the triangle is called the transformer's impedance and can be calculated using Equation 3.3:

$$\%Z = \sqrt{\%R^2 + \%X^2} \tag{3.3}$$

A transformer's impedance is sometimes called "impedance volts" because it can be measured by shorting the secondary terminals and applying sufficient voltage to the primary so that rated current flows in each winding. The ratio of applied voltage to rated voltage, times 100, is equal to the percent impedance.

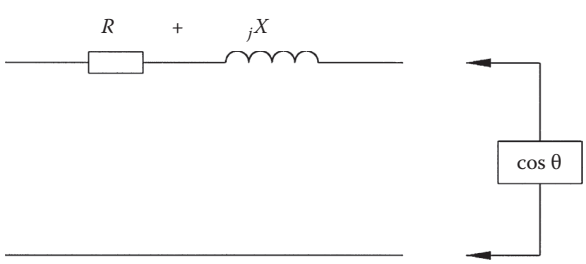

FIGURE 3.38 Simplified transformer model. (By permission of ABB Inc., Jefferson City, MO.)

www.EngineeringEbooksPdf.com

3.11.5 Short-Circuit Current

If the load (right) side of the model of Figure 3.38 is shorted and rated voltage from an infinite source is applied to the left side, the current I_{SC} will be limited only by the transformer impedance:

$$I_{SC} = \frac{100 \times I_R}{\%Z} \tag{3.4}$$

For example, if the rated current, I_R, is 100 A and the impedance is 2.0%, the short-circuit current will be 100 × 100/2 = 5000 A.

3.11.6 Percent Regulation

When a transformer is energized with no load, the secondary voltage will be exactly the primary voltage divided by the turns ratio (N_p/N_s). When the transformer is loaded, the secondary voltage will be diminished by an amount determined by the transformer impedance and the power factor of the load. This change in voltage is called regulation and is actually defined as the rise in voltage when the load is removed. One result of the definition of regulation is that it is always a positive number. The primary voltage is assumed to be held constant at the rated value during this process. The exact calculation of percent regulation is given in Equation 3.5:

$$\%reg = (L^2 \cdot (\%R^2 + \%X^2) + 200 \cdot L \cdot (\%X \cdot \sin\theta + \%R \cdot \cos\theta) + 10{,}000)^{0.5} - 100 \tag{3.5}$$

where
cos θ is the power factor of the load
L is per unit load on the transformer

The most significant portion of this equation is the cross products, and since $\%X$ predominates over $\%R$ in the transformer impedance and cos θ predominates over sin θ for most loads, the percent regulation is usually less than the impedance (at $L = 1$). When the power factor of the load is unity, then sin θ is zero and regulation is much less than the transformer impedance. A much simpler form of the regulation calculation is given in Equation 3.6. For typical values, the result is the same as the exact calculation out to the fourth significant digit or so:

$$\%reg \cong L \cdot \left(\%R^* \cos\theta + \%X^* \sin\theta + \frac{(\%X^* \cos\theta - \%R^* \sin\theta)^2}{200} \right) \tag{3.6}$$

3.11.7 Percent Efficiency

As with any other energy conversion device, the efficiency of a transformer is the ratio of energy delivered to the load divided by the total energy drawn from the source. Percent efficiency is expressed as follows:

$$\%\text{Efficiency} = \frac{L \cdot \text{kVA} \cdot \cos\theta \cdot 10^5}{L \cdot \text{kVA} \cdot \cos\theta \cdot 10^3 + \text{NL} + L^2 \cdot \text{LL}} \tag{3.7}$$

where cos θ is again the power factor of the load; therefore kVA cos θ is real energy delivered to the load. NL is the no-load loss, and LL is the load loss of the transformer. Most distribution transformers serving residential or light industrial loads are not fully loaded all the time. It is assumed that such transformers

www.EngineeringEbooksPdf.com

are loaded to about 50% of nameplate rating on the average. Thus efficiency is often calculated at $L = 0.5$, where the load loss is about 25% of the value at full load. Since a typical transformer will have no-load loss of around 25% of load loss at 100% load, then at $L = 0.5$, the no-load loss will equal the load loss and the efficiency will be at a maximum.

3.12 Transformer Loading

3.12.1 Temperature Limits

According to IEEE standards, modern distribution transformers are to operate at a maximum 65°C average winding rise over a 30°C ambient air temperature at rated kVA. One exception to this is submersible or vault-type distribution transformers, where a 55°C rise over a 40°C ambient is specified. The bulk oil temperature near the top of the tank is called the "top oil temperature," which cannot be more than 65°C over ambient and will typically be about 55°C over ambient, 10°C less than the average winding rise.

3.12.2 Hottest-Spot Rise

The location in the transformer windings that has the highest temperature is called the "hottest spot." Standards require that the hottest-spot temperature not exceed 80°C rise over a 30°C ambient, or 110°C. These are steady-state temperatures at rated kVA. The hottest spot is of great interest because, presumably, this is where the greatest thermal degradation of the transformer's insulation system will take place. For calculation of thermal transients, the top-oil rise over ambient air and the hottest-spot rise over top oil are the parameters used.

3.12.3 Load Cycles

If all distribution loads were constant, then determining the proper loading of transformers would be a simple task. Loads on transformers, however, vary through the hours of a day, the days of a week, and through the seasons of the year. Insulation aging is a highly nonlinear function of temperature that accumulates over time. The best use of a transformer, then, is to balance brief periods of hottest-spot temperatures slightly above 110°C with extended periods at hottest spots well below 110°C. Methods for calculating the transformer loss-of-life for a given daily cycle are found in the IEEE C57.91 Guide for Loading Mineral-Oil-Immersed Transformers. Parameters needed to make this calculation are the no-load and load losses, the top-oil rise, the hottest-spot rise, and the thermal time constant.

3.12.4 Thermal Time Constant

Liquid-filled distribution transformers can sustain substantial short-time overloads because the mass of oil, steel, and conductor takes time to come up to a steady-state operating temperature. Time constant values can vary from 2 to 6 h, mainly due to the differences in oil volume vs. tank surface for different products.

3.12.5 Loading Distribution Transformers

Utilities often assign loading limits to distribution transformers that are different from the transformer's nameplate kVA. This is based on three factors: the actual ambient temperature, the shape of the load curve, and the available air for cooling. For example, a transformer can have one loading limit for the summer and a larger loading limit for the winter. Areas with significantly different ambient temperatures could have their own different loading limits. The other typical variation of loading limits is based on the differing load cycles for various load types. For example, a transformer serving residential load might have a different assigned loading limit than an identical transformer serving a commercial establishment.

www.EngineeringEbooksPdf.com

3.13 Transformer Testing

3.13.1 Design Tests

Tests that manufacturers perform on prototypes or production samples are referred to as "design tests." These tests may include sound-level tests, temperature-rise tests, and short-circuit-current withstand tests. The purpose of a design test is to establish a design limit that can be applied by calculation to every transformer built. In particular, short-circuit tests are destructive and may result in some invisible damage to the sample, even if the test is passed successfully. The IEEE standard calls for a transformer to sustain six tests, four with symmetrical fault currents and two with asymmetrical currents. One of the symmetrical shots is to be of long duration, up to 2 s, depending on the impedance for lower ratings. The remaining five shots are to be 0.25 s in duration. The long-shot duration for distribution transformers 750 kVA and above is 1 s. The design passes the short-circuit test if the transformer sustains no internal or external damage (as determined by visual inspection) and minimal impedance changes. The tested transformer also has to pass production dielectric tests and experience no more than a 25% change in exciting current (Bean et al., 1959).

3.13.2 Production Tests

Production tests are given to and passed by each transformer made. Tests to determine ratio, polarity or phase displacement, iron loss, load loss, and impedance are done to verify that the nameplate information is correct. Dielectric tests specified by industry standards are intended to prove that the transformer is capable of sustaining unusual but anticipated electrical stresses that may be encountered in service. Production dielectric tests may include applied voltage, induced voltage, and impulse tests.

3.13.2.1 Applied-Voltage Test

Standards require application of a voltage of (very roughly) twice the normal line-to-line voltage to each entire winding for 1 min. This checks the ability of one phase to withstand voltage it may encounter when another phase is faulted to ground and transients are reflected and doubled.

3.13.2.2 Induced-Voltage Test

The original applied-voltage test is now supplemented with an induced-voltage test. Voltage at higher frequency (usually 400 Hz) is applied at twice the rated value of the winding. This induces the higher voltage in each winding simultaneously without saturating the core. If a winding is permanently grounded on one end, the applied-voltage test cannot be performed. In this case, many IEEE product standards specify that the induced primary test voltage be raised to 1000 plus 3.46 times the rated winding voltage (Bean et al., 1959).

3.13.2.3 Impulse Test

Distribution lines are routinely disturbed by voltage surges caused by lightning strokes and switching transients. A standard $1.2 \times 50\,\mu s$ impulse wave with a peak equal to the BIL (basic impulse insulation level) of the primary system (60–150 kV) is applied to verify that each transformer will withstand these surges when in service.

3.14 Transformer Protection

Distribution transformers require some fusing or other protective devices to prevent premature failure while in service. Circuit breakers at the substation or fusing at feeder taps or riser poles may afford some protection for individual transformers, but the most effective protection will be at, near, or within each transformer. Transformers that are supplied with their own protective device(s) are called "self-protected." Transformers that do not come with any protective device are called "conventional."

www.EngineeringEbooksPdf.com

3.14.1 Goals of Protection

Transformer-protection devices that limit excessive currents or prevent excessive voltages are intended to achieve the following:

- Minimize damage to the transformer due to overloads
- Prevent transformer damage caused by secondary short circuits
- Prevent damage caused by faults within the transformer
- Minimize the possibility of damage to other property or injury to personnel
- Limit the extent or duration of service interruptions or disturbances on the remainder of the system

The selection of protection methods and equipment is an economic decision and may not always succeed in complete achievement of all of the goals listed. For example, the presence of a primary fuse may not prevent longtime overloads that could cause transformer burnout.

3.14.2 Conventional Transformers

Overhead conventional transformers usually are installed with fused cutouts in the primary leads supplying the transformer. Pad-mount or submersible transformers may have fuses installed on a nearby pole or in a separate pad-mounted cabinet or submersible enclosure.

3.14.3 Internal Protection

When protection means are located within the transformer, the device can react to oil temperature as well as primary current. The most common internal protective devices are described in the following.

3.14.3.1 Protective Links

Distribution transformers that have no other protection are often supplied with a small high-voltage-expulsion fuse. The protective link is sized to melt at from 6 to 10 times the rated current of the transformer. Thus it will not protect against longtime overloads but will permit short-time overloads that may occur during inrush or cold-load-pickup phenomena. For this reason, they are often referred to as fault-sensing links. Depending on the system voltage, protective links can safely interrupt faults of 1000–3000 A.

3.14.3.2 Dual-Sensing or Eutectic Links

High-voltage fuses made from a low-melting-point tin alloy melt at 145°C and thus protect a transformer by detecting the combination of overload current and high oil temperature. A eutectic link, therefore, prevents longtime overloads but allows high inrush and cold-load-pickup currents. A similar device called a "dual element" fuse uses two sections of conductor that respond separately to current and oil temperature with slightly better coordination characteristics.

3.14.3.3 Current-Limiting Fuses

Current-limiting fuses can be used if the fault current available on the primary system exceeds the interrupting ratings of protective links. Current-limiting fuses can typically interrupt 40,000–50,000 A faults and do so in less than one-half of a cycle. The interruption of a high-current internal fault in such a short time will prevent severe damage to the transformer and avoid damage to surrounding property or hazard to personnel that might otherwise occur. Full-range current-limiting fuses can be installed in small air switches or in dry-well canisters that extend within a transformer tank. Current-limiting fuses cannot prevent longtime overloads, but they can open on a secondary short circuit, so the fuse must be easily replaceable. Current-limiting fuses are considerably larger than expulsion fuses.

www.EngineeringEbooksPdf.com

3.14.3.4 Bayonets

Pad mounts and submersibles may use a primary link (expulsion fuse) that is mounted internally in the transformer oil but that can be withdrawn for inspection of the fuse element or to interrupt the primary feed. This device is called a bayonet and consists of a probe with a cartridge on the end that contains the replaceable fuse element. Fuses for bayonets may be either fault sensing or dual sensing.

3.14.3.5 Combination of Bayonet and Partial-Range Current-Limiting Fuses

The most common method of protection for pad-mounted distribution transformers is the coordinated combination of a bayonet fuse (usually dual sensing) and a PRCL fuse. The PRCL only responds to a high fault current, while the bayonet fuse is only capable of interrupting low fault currents. These fuses must be coordinated in such a way that any secondary fault will melt the bayonet fuse. Fault currents above the bolted secondary fault level are assumed to be due to internal faults. Thus the PRCL, which is mounted inside the tank, will operate only when the transformer has failed and must be removed from service.

3.14.4 Coordination of Protection

As applied to overcurrent protection for distribution transformers, the term *coordination* means two things:

1. A fuse must be appropriately sized for the transformer. A fuse that is too large will not prevent short-circuit currents that can damage the transformer coils. A fuse that is too small may open due to normal inrush currents when the transformer is energized or may open due to short-time overload currents that the transformer is capable of handling.
2. Transformer protection must fit appropriately with other protection means located upstream, downstream, or within the transformer. For example, a secondary oil circuit breaker should be coordinated with a primary fuse so that any short circuit on the transformer secondary will open the breaker before the primary fuse melts.

Where two fuses are used to protect a transformer, there are two methods of achieving coordination of the pair: "matched melt" and "time–current-curve crossover coordination" (TCCCC).

3.14.4.1 Matched Melt

An example of matched-melt coordination is where a cutout with an expulsion fuse and a backup current-limiting fuse are used to protect an overhead transformer. The two fuses are sized so that the expulsion fuse always melts before or at the same time as the current-limiting fuse. This permits the current-limiting fuse to help clear the fault if necessary, and the cutout provides a visible indication that the fault has occurred.

3.14.4.2 TCCCC Coordination of Bayonet and Partial-Range Current-Limiting Fuses

TCCCC is much more common for pad-mounted and self-protected transformers, where the fuses are not visible. The TCCCC method is described as follows.

3.14.4.2.1 Fuse Curves

The main tool used for coordination is a graph of time vs. current for each fuse or breaker, as seen in Figure 3.39. The graph is displayed as a log–log plot and has two curves for any particular fuse. The first curve is called the minimum-melt curve, and this represents time–current points where the fuse element just starts to melt. The other curve is a plot of points at longer times (to the right of the minimum-melt curve). The latter curve is called the maximum-clear or sometimes the average-clear curve. The maximum-clear curve is where the fuse can be considered open and capable of sustaining full operating voltage across the fuse without danger of restrike. Even if a fuse has melted due to a fault, the fault current continues to flow until the maximum-clear time has passed. For expulsion fuses, there

www.EngineeringEbooksPdf.com

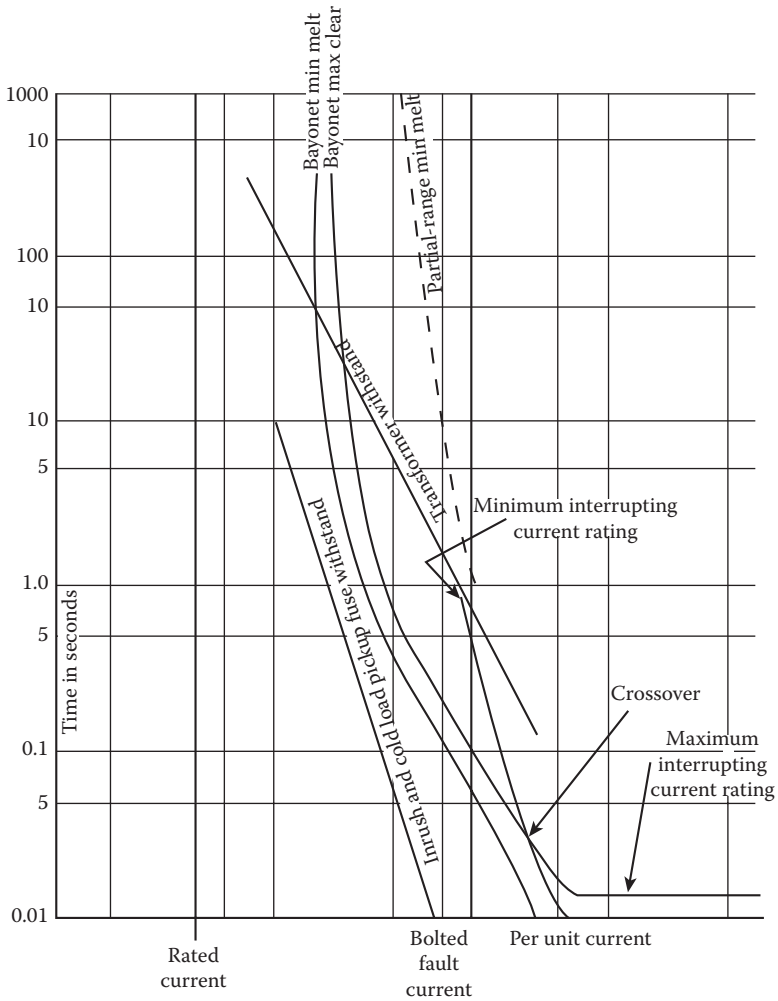

FIGURE 3.39 TCCCC. (By permission of ABB Inc., Jefferson City, MO.)

is a maximum interrupting rating that must not be exceeded unless a current-limiting or other backup fuse is present. For PRCL fuses, there is a minimum interrupting current. Above that minimum current, clearing occurs in about 0.25 cycles, so the maximum-clear curve is not actually needed for most cases.

3.14.4.2.2 Transformer Characteristics

Each transformer has characteristics that are represented on the time–current curve to aid in the coordination process:

1. Rated current = primary current at rated kVA.
2. Bolted fault current (I_{SC}) = short-circuit current in the primary with secondary shorted.
3. Inrush and cold-load-pickup curve:
   a. Inrush values are taken as 25 times rated current at 0.01 s and 12 times rated current at 0.1 s.
   b. Cold-load-pickup values are presumed to be six times rated current at 1 s and three times rated current at 10 s.
4. Through-fault duration or short-circuit withstand established by IEEE C57.109. For most transformers, the curve is the plot of values for I^2t = 1250 or 50 times rated current at 0.5 s, 25 times rated current at 2 s, and 11.2 times rated current at 10 s. Values longer than 10 s are usually ignored.

www.EngineeringEbooksPdf.com

3.14.4.2.3 Fuse Coordination Steps

Select an expulsion fuse such that

- The minimum-melt curve falls entirely to the right of the inrush–cold-load-pickup curve; for most fuses, the minimum-melt curve will always be to the right of 300% of rated load, even for very long times
- The maximum-clear curve will fall entirely to the left of the through-fault-duration curve at 10 s and below

Select a PRCL fuse such that its minimum-melt curve

- Crosses the expulsion-fuse maximum-clear curve to the right of the bolted fault line, preferably with a minimum 25% safety margin
- Crosses the expulsion-fuse maximum-clear curve at a current higher than the PRCL minimum interrupting rating
- Crosses the expulsion-fuse maximum-clear curve at a current below the maximum interrupting rating of the expulsion fuse; it is not a critical issue if this criterion is not met, since the PRCL will quickly clear the fault anyway

There are additional considerations, such as checking for a longtime recross of the two fuse characteristics or checking for a recross at a "knee" in the curves, as might occur with a dual-sensing fuse or a low-voltage circuit breaker with a high-current magnetic trip.

3.14.4.3 Low-Voltage Oil-Breaker Coordination

The coordination of an oil breaker with an expulsion fuse is slightly different than the previous example. The oil-breaker current duty is translated to the high-voltage side and is sized in a manner similar to the expulsion fuse in the previous example. The expulsion fuse is then selected to coordinate with the breaker so that the minimum melt falls entirely to the right of the breaker's maximum clear for all currents less than the bolted fault current. This ensures that the breaker will protect against all secondary faults and that the internal expulsion fuse will only open on an internal fault, where current is not limited by the transformer impedance.

3.14.5 Internal Secondary Circuit Breakers

Secondary breakers that are installed in the oil of a transformer can protect against overloads that might otherwise cause thermal damage to the conductor-insulation system. Some breakers also have magnetically actuated trip mechanisms that rapidly interrupt the secondary load in case of a secondary fault. When properly applied, secondary breakers should limit the top-oil temperature of a transformer to about 110°C during a typical residential load cycle. Breakers can have an emergency position, which allows the transformer to temporarily supply a higher load, allowing time to replace the unit with one having a higher kVA capacity. The secondary oil breaker is also handy to disconnect load from a transformer without touching the primary connections.

3.14.6 CSP®* Transformers

Overhead transformers that are built with the combination of secondary breaker, primary protective link, and external lightning arrester are referred to generically as CSPs (completely self-protected transformers). This protection package is expected to prevent failures caused by excessive loads and external

* CSP is a registered trademark of ABB Inc., Raleigh, NC.

www.EngineeringEbooksPdf.com

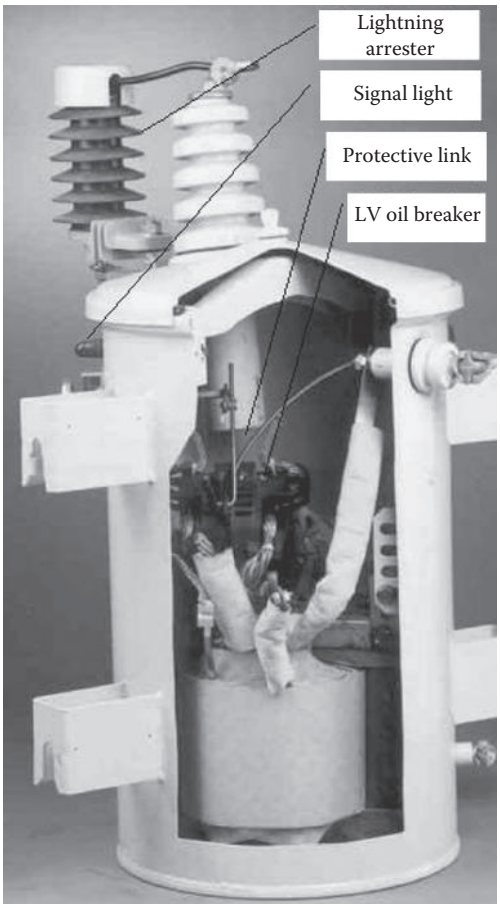

FIGURE 3.40 Cutaway showing CSP components. (By permission of ABB Inc., Jefferson City, MO.)

voltage surges, and to protect the system from internal faults. The protective link is often mounted inside the high-voltage bushing insulator, as seen in Figure 3.40.

3.14.7 Protection Philosophy

CSP transformers are still in use, especially in rural areas, but the trend is away from secondary breakers to prevent transformer burnouts. Continued growth of residential load is no longer a foregone conclusion. Furthermore, utilities are becoming more sophisticated in their initial transformer sizing and are using computerized billing data to detect a transformer that is being overloaded. Experience shows that modern distribution transformers can sustain more temporary overload than a breaker would allow. Most utilities would rather have service to their customers maintained than to trip a breaker unnecessarily.

3.14.8 Lightning Arresters

Overhead transformers can be supplied with primary lightning arresters mounted nearby on the pole structure, on the transformer itself, directly adjacent to the primary bushing, or within the tank. Pad-mounted transformers can have arresters too, especially those at the end of a radial line, and they can be inside the tank, plugged into dead-front bushings, or at a nearby riser pole, where primary lines transition from overhead to underground.

www.EngineeringEbooksPdf.com

3.15 Economic Application

3.15.1 Historical Perspective

Serious consideration of the economics of transformer ownership did not begin until the oil embargo of the early 1970s. With large increases in the cost of all fuels, utilities could no longer just pass along these increases to their customers without demonstrating fiscal responsibility by controlling losses on their distribution systems.

3.15.2 Evaluation Methodology

An understanding soon developed that the total cost of owning a transformer consisted of two major parts, the purchase price and the cost of supplying thermal losses of the transformer over an assumed life, which might be 20–30 years. To be consistent, the future costs of losses have to be brought back to the present so that the two costs are both on a present-worth basis. The calculation methodologies were published first by Edison Electric Institute and then in IEEE C57.120, Loss Evaluation Guide for Power Transformers and Reactors. The essential part of the evaluation method is the derivation of *A* and *B* factors, which are the utility's present-worth costs for supplying no-load and load losses, respectively, in the transformer as measured in dollars per watt.

3.15.3 Evaluation Formula

In its simplest form, the IEEE loss evaluation guide expresses the present value of the total owning cost of purchasing and operating a transformer as follows:

$$\text{TOC} = \text{Transformer cost} + A \times \text{no load loss} + B \times \text{load loss} \tag{3.8}$$

where
A is the loss-evaluation factor for no-load loss (dollars per watt)
B is the loss-evaluation factor for load loss (dollars per watt)

The guide develops in detail the calculation of *A* and *B* factors from utility operating parameters as shown in Equations 3.9 and 3.10, respectively:

$$A = \frac{\text{SC} + \text{EC} \times \text{HPY}}{\text{FCR} \times 1000} \tag{3.9}$$

$$B = \frac{[(\text{SC} \times \text{RF}) + (\text{EC} \times \text{LSF} \times \text{HPY})] \times (\text{PL})^2}{\text{FCR} \times 1000} \tag{3.10}$$

where
SC = GC + TD
SC is the avoided cost of system capacity
GC is the avoided cost of generation capacity
TD is the avoided cost of transmission and distribution capacity
EC is the avoided cost of energy
HPY is the hours per year
FCR is the levelized fixed-charge rate
RF is the peak responsibility factor
LSF is the transformer loss factor
PL is the equivalent annual peak load

With the implementation of the U.S. Department of Energy (DOE) efficiency requirements (see Section 3.15.4) and deregulation, many electric utilities in the United States have now chosen to neglect elements

www.EngineeringEbooksPdf.com

of system cost that may no longer apply or to abandon entirely the consideration of the effects of transformer losses on the efficiency of their distribution system.

3.15.4 U.S. Department of Energy Efficiency Regulations

The DOE determined that energy efficiency conservation standards were necessary for distribution transformers, both liquid filled and dry type. According to DOE, this will result in significant conservation of energy. The details of the standard is found in 10 CFR Part 431, Paragraph 431.196 (Federal Register 72FR58190, dated October 12, 2007) with the Test Procedures defined in 10 CFR Part 431, Subpart K, Appendix A (Federal Register 71FR24972, dated April 27, 2006).

The regulations require all distribution transformers manufactured for use in the United States on or after January 1, 2010, must meet the minimum efficiency standards outlined in Tables 3.1 and 3.2.

TABLE 3.1 Minimum Efficiency for Liquid-Immersed Distribution Transformers

Single-Phase (kVA)	Three-Phase (kVA)	Efficiency (%)
	15	98.36
10	30	98.62
15	45	98.76
25	75	98.91
37.5	112.5	99.01
50	150	99.08
75	225	99.17
100	300	99.23
167	500	99.25
250	750	99.32
333	1000	99.36
500	1500	99.42
667	2000	99.46
833	2500	99.49

TABLE 3.2 Minimum Efficiency for Medium-Voltage Dry-Type Distribution Transformers

BIL		20–45 kV	46–95 kV	≥96 kV
Single-Phase (kVA)	Three-Phase (kVA)	Efficiency (%)	Efficiency (%)	Efficiency (%)
	15	97.50	97.18	
	30	97.90	97.63	
15	45	98.10	97.86	
25	75	98.33	98.12	
37.5	112.5	98.49	98.30	
50	150	98.60	98.42	
75	225	98.73	98.57	98.53
100	300	98.82	98.67	98.63
167	500	98.96	98.83	98.80
250	750	99.07	98.95	98.91
333	1000	99.14	99.03	98.99
500	1500	99.22	99.12	99.09
667	2000	99.27	99.18	99.15
833	2500	99.31	99.23	99.20

www.EngineeringEbooksPdf.com

This also applies to all transformers imported into the United States on or after January 1, 2010. Although there are some exclusions, it basically encompasses most distribution transformers, single- and three-phase.

The DOE efficiency is calculated by the methods shown in the earlier Section 3.11.7, using a 50% load.

The DOE will be reviewing the existing efficiency levels on a periodic basis, which may result in some changes. All documents and updates may be found at the following website: http://www1.eere.energy.gov/buildings/appliance_standards/commercial/distribution_transformers.html

References

ABB, *Distribution Transformer Guide*, Distribution Transformer Division, ABB Power T&D Co., Raleigh, NC, 1995, pp. 40–70.

Bean, R.L., Chackan, N. Jr., Moore, H.R., and Wentz, E.C., *Transformers for the Electric Power Industry*, Westinghouse Electric Corp. Power Transformer Division, McGraw-Hill, New York, 1959, pp. 338–340.

Claiborne, C.C., ABB Electric Systems Technology Institute, Raleigh, NC, personal communication, 1999.

Galloway, D.L., Harmonic and DC currents in distribution transformers, presented at *46th Annual Power Distribution Conference*, Austin, TX, 1993.

Hayman, J.L., E.I. du Pont de Nemours & Co., Letter to Betty Jane Palmer, Westinghouse Electric Corp., Jefferson City, MO, October 11, 1973.

IEEE C57.12.00-2010, *Standard General Requirements for Liquid-Immersed Distribution, Power, and Regulating Transformers*, Institute of Electrical and Electronics Engineers, Piscataway, NJ, 2010.

IEEE C57.12.20-2005, *IEEE Standard for Overhead Type Distribution Transformers, 500 kVA and Smaller: High Voltage, 34500 volts and below; Low Voltage, 7970/13800Y volts and below*, Institute of Electrical and Electronics Engineers, Piscataway, NJ, 2005.

IEEE C57.12.23-2009, *Standard for Underground-Type, Self-Cooled, Single-Phase Distribution Transformers with Separable, Insulated High-Voltage Connectors; High Voltage 25 kV and below and Low Voltage 600 V and below*, Institute of Electrical and Electronics Engineers, Piscataway, NJ, 2009.

IEEE C57.12.24-2000, *Underground-Type Three-Phase Distribution Transformers: 2500 KVA and Smaller; High-Voltage, 34,500 GrdY/19,920 volts and below; Low Voltage, 480 volts and below—Requirements*, Institute of Electrical and Electronics Engineers, Piscataway, NJ, 2000.

IEEE C57.12.28-2005, *Standard for Pad-Mounted Equipment—Enclosure Integrity*, Institute of Electrical and Electronics Engineers, Piscataway, NJ, 2005.

IEEE C57.12.29-2005, *Standard for Pad-Mounted Equipment—Enclosure Integrity for Coastal Environments*, Institute of Electrical and Electronics Engineers, Piscataway, NJ, 2005.

IEEE C57.12.30-2010, *Standard for Pole-Mounted Equipment—Enclosure Integrity for Coastal Environments*, Institute of Electrical and Electronics Engineers, Piscataway, NJ, 2010.

IEEE C57.12.31-2010, *Standard for Pole-Mounted Equipment—Enclosure Integrity*, Institute of Electrical and Electronics Engineers, Piscataway, NJ, 2010.

IEEE C57.12.32-2002, *Standard for Submersible Equipment—Enclosure Integrity*, Institute of Electrical and Electronics Engineers, Piscataway, NJ, 2002.

IEEE C57.12.34-2010, *Standard Requirements for Pad-Mounted, Compartmental-Type, Self-Cooled, Three-Phase Distribution Transformers, 2500 KVA and Smaller–High-Voltage: 34,500 GrdY/19,920 volts and below; Low Voltage: 480 volts and below*.

IEEE C57.12.38-2009, *Standard for Pad-Mounted-Type, Self-Cooled, Single-Phase Distribution Transformers; High Voltage 34,500 GrdY/19,920 V and below; Low Voltage, 240/120 V; 167 KVA and Smaller*, Institute of Electrical and Electronics Engineers, Piscataway, NJ, 2009.

IEEE C57.12.40-2006, *Standard for Requirements for Secondary Network Transformers, Subway and Vault Types (Liquid Immersed)*, Institute of Electrical and Electronics Engineers, Piscataway, NJ, 2006.

www.EngineeringEbooksPdf.com

IEEE C57.12.44-2005, *Standard Requirements for Secondary Network Protectors*, Institute of Electrical and Electronics Engineers, Piscataway, NJ, 2005.

IEEE C57.12.80-2010, *Standard Terminology for Power and Distribution Transformers*, Institute of Electrical and Electronics Engineers, Piscataway, NJ, 2010.

IEEE C57.91-1995, *Guide for Loading Mineral-Oil-Immersed Transformers*, Institute of Electrical and Electronics Engineers, Piscataway, NJ, 1995, p. iii.

IEEE C57.105-1978, *Guide for Application of Transformer Connections in Three-Phase Distribution System*, Institute of Electrical and Electronics Engineers, Piscataway, NJ, 1978.

IEEE C57.109-1993, *IEEE Guide for Liquid-Immersed Transformers Through-Fault-Current Duration*.

IEEE C57.110-1998, *Recommended Practice for Establishing Transformer Capability when Supplying Nonsinusoidal Load Currents*, Institute of Electrical and Electronics Engineers, Piscataway, NJ, 1998.

IEEE C57.120-1991, *Loss Evaluation Guide for Power Transformers and Reactors*, Institute of Electrical and Electronics Engineers, Piscataway, NJ, 1991.

IEEE 386-2006, *Standard for Separable Insulated Connector Systems for Power Distribution Systems above 600 V*.

Myers, S.D., Kelly, J.J., and Parrish, R.H., *A Guide to Transformer Maintenance*, footnote 12, Transformer Maintenance Division, S.D. Myers, Akron, OH, 1981.

Palmer, B.J., History of distribution transformer core/coil design, Distribution Transformer Engineering Report No. 83-17, Westinghouse Electric, Jefferson City, MO, 1983.

Powel, C.A., General considerations of transmission, in *Electrical Transmission and Distribution Reference Book*, ABB Power T&D Co., Raleigh, NC, 1997, p. 1.

U.S. Department of Energy, 10 CFR Part 431, Paragraph 431.196. Federal Register 72FR58190, dated October 12, 2007.

www.EngineeringEbooksPdf.com

www.EngineeringEbooksPdf.com

4

Phase-Shifting Transformers

4.1 Introduction **4**-1
4.2 Basic Principle of Application **4**-3
4.3 Load Diagram of a PST **4**-4
4.4 Total Power Transfer **4**-6
4.5 Types of Phase-Shifting Transformers **4**-8
General Aspects • Single-Core Design • Two-Core Design • Quadrature Booster Transformers
4.6 Details of Transformer Design **4**-13
4.7 Details of On-Load Tap-Changer Application **4**-15
4.8 Other Aspects **4**-18
Connection • Tests
Bibliography **4**-19

Gustav Preininger
Consultant

4.1 Introduction

The necessity to control the power flow rose early in the history of the development of electrical power systems. When high-voltage grids were superimposed on local systems, parallel-connected systems or transmission lines of different voltage levels became standard. Nowadays large high-voltage power grids are connected to increase the reliability of the electrical power supply and to allow exchange of electrical power over large distances. Complications, attributed to several factors such as variation in power-generation output and/or power demand, can arise and have to be dealt with to avoid potentially catastrophic system disturbances. Additional tools in the form of phase-shifting transformers (PSTs) are available to control the power flow to stabilize the grids. These may be justified to maintain the required quality of the electrical power supply.

To transfer electrical power between two points of a system, a difference between source voltage (V_S) and load voltage (V_L) in quantity and/or in phase angle is necessary. See Figure 4.1. Using the notation of Figure 4.1, it follows that:

$$\mathbf{Z} = R + jX = Z * e^{j\gamma_Z} \tag{4.1}$$

$$Z = \sqrt{R^2 + X^2} \tag{4.2}$$

$$\gamma_Z = \arctan\left(\frac{X}{R}\right) \tag{4.3}$$

www.EngineeringEbooksPdf.com

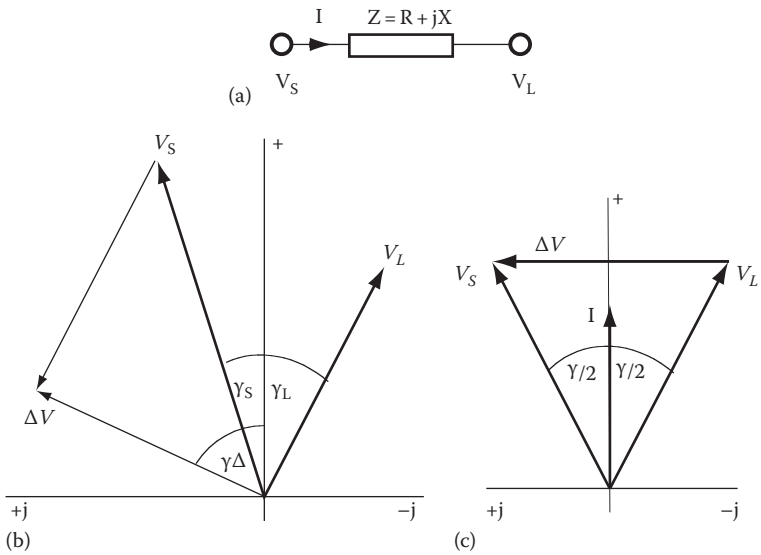

FIGURE 4.1 Power transfer. (See text for label a through c descriptors.)

$$V_S = V_S * (\cos\gamma_S + j\sin\gamma_S), \quad V_L = V_L * (\cos\gamma_L + j\sin\gamma_L) \tag{4.4}$$

$$\Delta\mathbf{V} = \mathbf{V}_S - \mathbf{V}_L \tag{4.5}$$

$$\Delta\mathbf{V} = (V_S * \cos\gamma_S - V_L * \cos\gamma_L) + j(V_S * \sin\gamma_S - V_L * \sin\gamma_L) = \Delta V * e^{-j\gamma_\Delta} \tag{4.6}$$

$$\Delta V = \sqrt{V_S^2 - 2 * V_S * V_L * \cos(\gamma_S - \gamma_L) + V_L^2} \tag{4.7}$$

$$\gamma_\Delta = \arctan\left(\frac{V_S * \sin\gamma_S - V_L * \sin\gamma_L}{V_S * \cos\gamma_S - V_L * \cos\gamma_L}\right) \tag{4.8}$$

$$I = \frac{\Delta V}{Z} * e^{j(\gamma_\Delta - \gamma_Z)} \tag{4.9}$$

For symmetrical conditions $V_S = V_L = V$, and $\gamma_S = \gamma/2$, and $\gamma_L = -\gamma/2$, $R \ll X$, then

$$\Delta V = V * 2 * \sin\left(\frac{\gamma}{2}\right) \tag{4.10}$$

$$\gamma_\Delta = \frac{\pi}{2} \tag{4.11}$$

$$I = \frac{V * 2 * \sin(\gamma/2)}{X} \tag{4.12}$$

www.EngineeringEbooksPdf.com

4.2 Basic Principle of Application

Because of the predominantly inductive character of the power system, an active power flow between source and load must be accomplished with a phase lag between the terminals. Phase-shifting transformers are a preferred tool to achieve this goal. Two principal configurations are of special interest: (1) the power flow between transmission systems operating in parallel where one system includes a PST and (2) where a single transmission line which includes a PST is connecting two otherwise independent power systems. The latter is in fact a special case of the first, but it has become more important nowadays for the interconnection of large systems. For the following considerations, it is assumed that the ohmic resistance R is small compared with the reactance X and thus has been neglected.

One practical basic situation is that a location where power is needed (load side) is connected to the source side through two systems that need not necessarily have the same rated voltage level. See Figure 4.2. Without any additional measure, the currents I_1 and I_2 would be distributed in proportion to the ratio of the impedances of the systems,

$$I_1 = \frac{I \times X_2}{(X_1 + X_2)}$$
$$I_2 = \frac{I \times X_1}{(X_1 + X_2)} \tag{4.13}$$

and there is no doubt that system 2 would take only a small part of the load because of the additional impedances of the two transformers in that branch. If the power flow in system 2 should be increased, an additional voltage ΔV must be introduced to compensate the increased voltage drop in system 2. Presuming that active power should be supplied to the load side and considering the inductive character of the systems, this voltage must have a 90° phase lag to the line-to-ground voltages of the system (V_L). In principle, the source of ΔV could be installed in each of the two systems. Figure 4.3 shows the voltage diagrams of both options. Figure 4.3a corresponds to Figure 4.2 with the PST installed in system 2, the system with the higher impedance. The additional voltage reduces the voltage drop in system 2 to that of system 1. The voltage at the output or load side of the PST V_L^* leads the voltage at the input or source side V_S. Per definition, this is called an advanced phase angle. If the PST were installed in system 1 (Figure 4.3b), the additional voltage would increase the voltage drop to that of system 2. In this case, the load-side voltage V_L^* lags the source side voltage V_S, and this is defined as retard phase angle. As can also be seen from the diagrams, an advanced phase angle minimizes the total angle between source and load side.

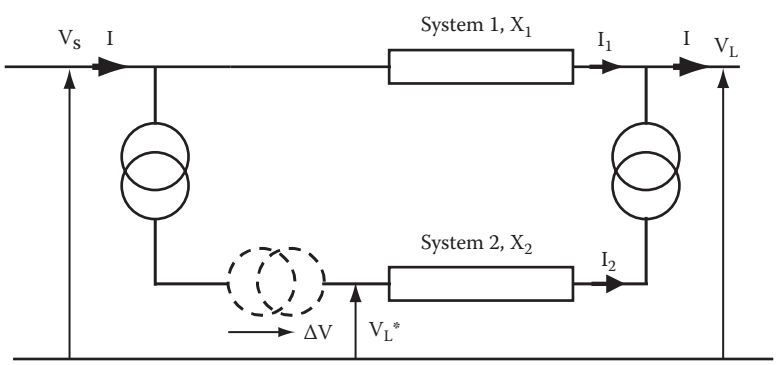

FIGURE 4.2 Parallel systems.

www.EngineeringEbooksPdf.com

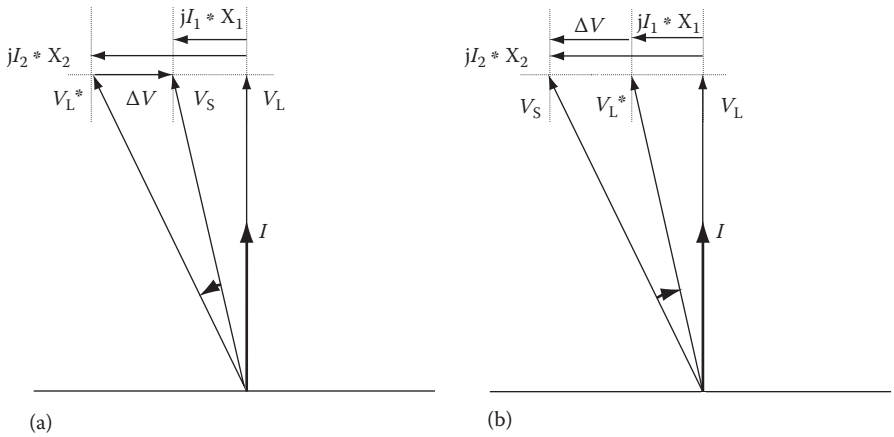

FIGURE 4.3 No-load voltage diagram of parallel systems. (a) Advanced phase angle V_L^* leads V_S (b) retard phase angle V_L lags V_S.

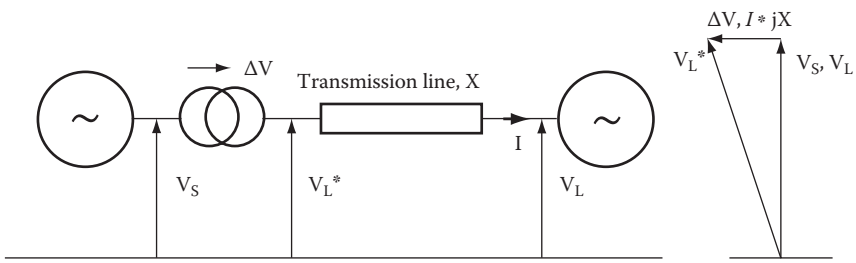

$$V_S + \Delta V - I * jX - V_L = 0$$

for

$V_S = V_L = V$

hence

$$\Delta V - I * jX = 0$$

FIGURE 4.4 Connection of two systems.

The second important application is the use of a PST to control the power flow between two large independent grids (Figure 4.4). An advanced phase angle is necessary to achieve a flow of active power from system 1 to system 2.

4.3 Load Diagram of a PST

So far, the PST has been considered as a black box under a no-load condition, and only its phase-shifting effect has been discussed. Now phase-shifting is quite a normal condition for a transformer and can be found in every transformer that incorporates differently connected primary and secondary windings. But this has no effect, as the aspects of the connected systems follow the same change of the phase angle, and only the voltage drop across the transformer is of interest. PSTs operate between systems having the same frequency and phase sequence. The voltages can differ in magnitude and phase angle. To develop the load-diagram of a PST, the unit has to be split up into two parts: the one presenting an ideal transformer without losses, which accomplishes the phase shift, and the other that is a transformer with a 1:1 turn-to-turn ratio and an equivalent impedance (Figure 4.5a).

The diagram is developed beginning at the load side, where voltage V_L and current I_L are known. Adding the voltage drop, $I * R_T + I * jX_T$, to voltage V_L results in voltage V_L^*, which is an internal, not

www.EngineeringEbooksPdf.com

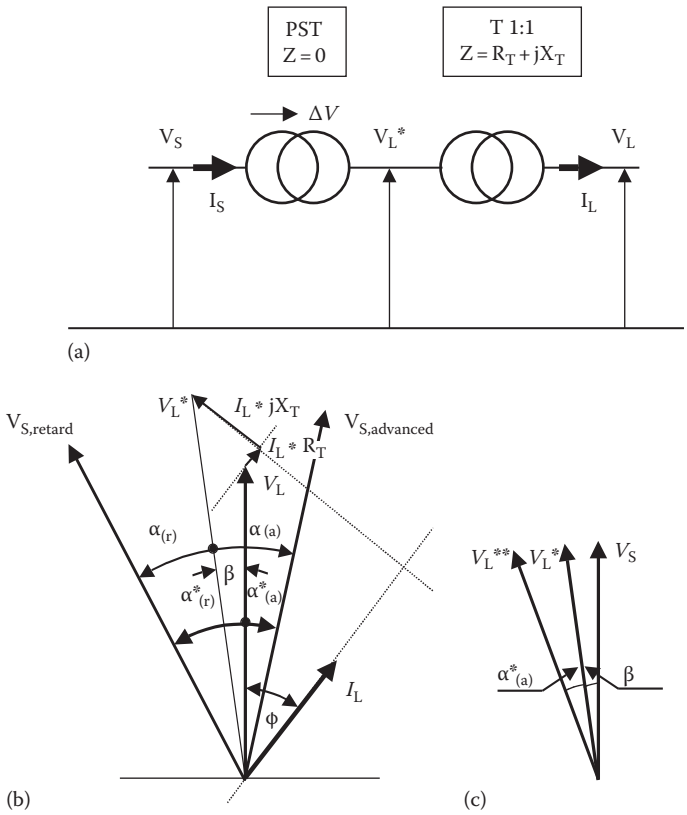

FIGURE 4.5 On-load diagram of a PST. (See text for label a through c descriptors.)

measurable, voltage of the PST. This voltage is turned either clockwise or counterclockwise, and as a result the source voltages $V_{S,retard}$ or $V_{S,advanced}$ are obtained, which are necessary to produce voltage V_L and current I_L at the load side. Angle α determines the phase-shift at the no-load condition, either as retard phase-shift angle $\alpha_{(r)}$ or as advanced phase-shift angle $\alpha_{(a)}$. Under no load, the voltages V_L and V_L^* are identical, but under load, V_L^* is shifted by the load angle β. As a result, the phase angles under load are not the same as under no load. The advanced phase-shift angle is reduced to $\alpha^*_{(a)}$, whereas the retard phase-shift angle is increased to $\alpha^*_{(r)}$. The advanced phase angle under load is given by

$$\alpha^*_{(a)} = \alpha_{(a)} - \beta \tag{4.14}$$

and the retard phase angle under load is given by

$$\alpha^*_{(r)} = \alpha_{(r)} + \beta \tag{4.15}$$

This is very important for the operation of a PST. Because the phase angle determines the voltage across the PST, an increase of the load phase angle in a retard position would mean that the PST is overexcited; therefore the retard-load phase-shift angle should be limited with the no-load angle.

The load angle β can be calculated from

$$\beta \sim \arctan\left(\frac{z_T * \cos\gamma}{100 + z_T * \sin\gamma}\right) \tag{4.16}$$

where all quantities are per unit (p.u.) and z_T is the transformer impedance.

www.EngineeringEbooksPdf.com

In reality, the PST does not influence the voltages neither at the source nor at the load side because it is presumed that the systems are stable and will not be influenced by the power flow. This means that V_S and V_L coincide and V_L^* would be shifted by $\alpha^*_{(a)}$ to V_L^{**} (Figure 4.5c). As for developing the PST load diagram, a certain load has been assumed. The advanced phase-shift angle is a measure of the remaining available excess power.

4.4 Total Power Transfer

The voltages at the source side (V_S) and at the load side (V_L) are considered constant, i.e., not influenced by the transferred power, and operating synchronously but not necessarily of the same value and phase angle. To calculate the power flow it has been assumed that the voltages at source side (V_S) and load side (V_L) and the impedance (Z) are known.

$$V_S = V_S * (\cos\gamma_S + j\sin\gamma_S) \tag{4.17}$$

$$V_L = V_L * (\cos\gamma_L + j\sin\gamma_L) \tag{4.18}$$

$$Z = jX \tag{4.19}$$

Then the current becomes

$$I_L = \frac{1}{Z} * (V_S - V_L) = \frac{1}{X} * \left((V_S * \sin\gamma_L - V_L * \sin\gamma_L) - j(V_S * \cos\gamma_S - V_L * \cos\gamma_L)\right) \tag{4.20}$$

and the power at source (S_S) and load (S_L) side can be calculated by multiplying the respective voltage with the conjugate complex current:

$$S_S = \frac{V_S}{X} * V_L * \sin(\gamma_S - \gamma_L) + j\frac{V_S}{X} * (V_S - V_L * \cos(\gamma_S - \gamma_L)) \tag{4.21}$$

$$S_L = \frac{V_L}{X} * V_S * \sin(\gamma_S - \gamma_L) + j\frac{V_L}{X} * (V_S * \cos(\gamma_S - \gamma_L) - V_L) \tag{4.22}$$

Because a mere inductive impedance has been assumed, only the reactive power changes.

Symmetrical conditions ($V_S = V_L = V$, $\gamma_S = 0$, and $\gamma_L = -\gamma$) are very common:

$$S_S = \frac{V^2}{X} * (\sin\gamma + j(1 - \cos\gamma)) = \frac{2 * V^2 * \sin(\gamma/2)}{X} * \left(\cos\left(\frac{\gamma}{2}\right) + j\sin\left(\frac{\gamma}{2}\right)\right) \tag{4.23}$$

$$S_L = \frac{V^2}{X} * (\sin\gamma - j(1 - \cos\gamma)) = \frac{2 * V^2 * \sin(\gamma/2)}{X} * \left(\cos\left(\frac{\gamma}{2}\right) - j\sin\left(\frac{\gamma}{2}\right)\right) \tag{4.24}$$

This solution can be considered as a basic load ($S_{L0} = P_0 + jQ_0$) that exists only when the magnitude and/or phase angle of the source and load voltages are different. If a PST is installed in this circuit with an advanced phase-shift angle α, the transferred load can be calculated by substituting α + γ as

www.EngineeringEbooksPdf.com

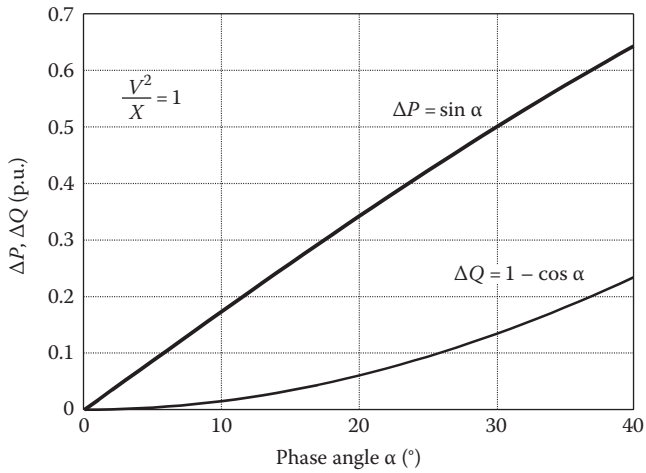

FIGURE 4.6 Additional power flow.

angle and adding the PST impedance X_T to X. By introducing the basic load in the result, the power flow can be calculated as a function of α.

$$P_L(\alpha) = P_{L_0} * \cos\alpha - Q_{L_0} * \sin\alpha + \frac{V^2}{X} * \sin\alpha \tag{4.25}$$

$$Q_L(\alpha) = P_{L_0} * \sin\alpha + Q_{L_0} * \cos\alpha + \frac{V^2}{X} * (1 - \cos\alpha) \tag{4.26}$$

Figure 4.6 shows the variation of the additional power flow for symmetrical conditions, no previous load, constant impedance X, and maximum additional load 1 p.u. ($P_0 = Q_0 = 0$, $V^2/X = 1$). As can be seen from Equations 4.25 and 4.26 and Figure 4.6, a mere ohmic power flow is not possible in the symmetrical case.

In Figure 4.7a and b, the variation of the total power flow with the phase-shift angle is plotted for 1 p.u. additional load and constant impedance, depending on different previous loads. The most effective active power transfer can be obtained in the case of a capacitive load.

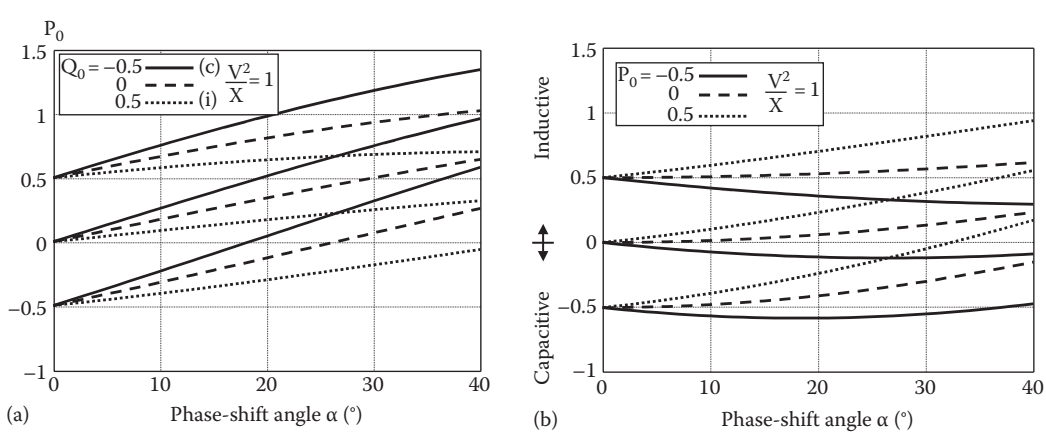

FIGURE 4.7 (a) Active power flow. (b) Reactive power flow.

www.EngineeringEbooksPdf.com

Another problem is the determination of the necessary voltage difference (value and angle) when V_S, the load $S_0 = P_0 + jQ_0$, and the impedance X are known:

$$V_L = \sqrt{\frac{V_S^2 - 2 * Q_0 * X}{2} + \sqrt{\left(\frac{V_S^2 - 2 * Q_0 * X}{2}\right)^2 - \left(P_0^2 + Q_0^2\right) * X^2}} \tag{4.27}$$

$$V_{La} = V_S * V_L^2 * \frac{V_L^2 + Q_0 * X}{(P_0 * X)^2 + \left(V_L^2 + Q_0 * X\right)^2} \tag{4.28}$$

$$V_{Lr} = -V_S * V_L^2 * \frac{P_0 * X}{(P_0 * X)^2 + \left(V_L^2 + Q_0 * X\right)^2} \tag{4.29}$$

$$\gamma_L = \arctan \frac{-P_0 * X}{(P_0 * X)^2 + \left(V_L^2 + Q_0 * X\right)^2} \tag{4.30}$$

4.5 Types of Phase-Shifting Transformers

4.5.1 General Aspects

The general principle to obtain a phase shift is based on the connection of a segment of one phase with another phase. To obtain a 90° additional voltage ΔV, the use of delta-connected winding offers the simplest solution. Figure 4.8 shows a possible arrangement and is used to introduce a few basic definitions. The secondary winding of phase $V_2 - V_3$ is split up into two halves and is connected in series with phase V_1. By designing this winding as a regulating winding and using on-load tap changers (OLTC), ΔV and the phase-shift angle can be changed under load. The phasor diagram has been plotted for no-load conditions, i.e., without considering the voltage drop in the unit. It also should be noted that the currents in the two halves of the series winding are not in phase. This is different from normal power transformers and has consequences with respect to the internal stray field.

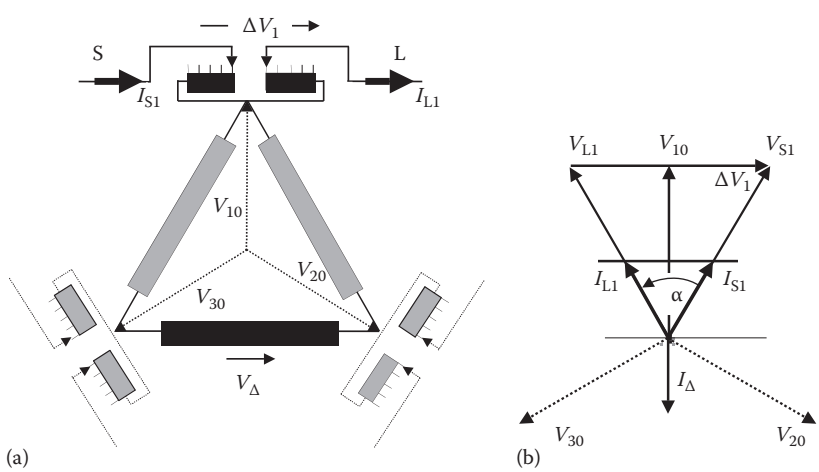

FIGURE 4.8 Single core symmetrical PST. (a) Windings arrangement. (b) Phasor representation.

www.EngineeringEbooksPdf.com

From the connection diagram (Figure 4.8a), the following equations can be derived:

$$V_{S1} = V_{10} + \left(\frac{\Delta V_1}{2}\right) \tag{4.31}$$

$$V_{L1} = V_{10} - \left(\frac{\Delta V_1}{2}\right) \tag{4.32}$$

$$\Delta V_1 = V_{S1} - V_{L1} \tag{4.33}$$

From the phasor diagram (Figure 4.8b) follows ($V_{S1} = V_{L1} = V$):

$$V_0 = V * \cos\left(\frac{\alpha}{2}\right) \tag{4.34}$$

$$\Delta V = V * 2 * \sin\left(\frac{\alpha}{2}\right) \tag{4.35}$$

$$V_\Delta = V * \cos\left(\frac{\alpha}{2}\right) * \sqrt{3} \tag{4.36}$$

and with $I_S = I_L = I$, the part of the current that is transferred to the exciting winding becomes

$$I_\Delta = \frac{\Delta V}{V_\Delta} * I * \cos\left(\frac{\alpha}{2}\right) = I * \frac{2}{\sqrt{3}} * \sin\left(\frac{\alpha}{2}\right) \tag{4.37}$$

The throughput power can be calculated from

$$P_{SYS} = 3 * V * I \tag{4.38}$$

and the rated design power, which determines the size of the PST, becomes

$$P_T = 3 * \Delta V * I = P_{SYS} * 2 * \sin\left(\frac{\alpha}{2}\right) \tag{4.39}$$

A third kind of power (P_Δ) is the power that is transferred into the secondary circuit. This power is different from P_T because a part of the primary current is compensated between the two parts of the series winding itself. In two-core designs (see Equation 4.33), this power determines also the necessary breaking capability of the OLTC.

$$P_\Delta = V_\Delta * I_\Delta = \frac{1}{3} * P_{SYS} * \sin\alpha \tag{4.40}$$

In addition to the transferred power, the phase-shift angle is also important. A phase-shift angle of 20° means that the PST has to be designed for 34.8% of the throughput power, and an angle of 40° would require 68.4%. In this respect, it has to be considered that the effective phase-shift angle under load is

www.EngineeringEbooksPdf.com

smaller than the no-load phase-shift angle. In the optimum case when the load power factor is close to 1, a PST impedance of 15% would reduce the load phase-shift angle by 8.5° (Equations 4.14 and 4.16).

In practice, various solutions are possible to design a PST. The major factors influencing the choice are:

- Throughput power and phase-shift angle requirement
- Rated voltage
- Short-circuit capability of the connected systems
- Shipping limitations
- Load tap-changer performance specification

In addition, preferences of a manufacturer as to the type of transformer (core or shell) or type of windings and other design characteristics may also play a role. Depending on the rating, single- or two-core designs are used. Two-core designs may require either a one-tank or a two-tank design.

4.5.2 Single-Core Design

Symmetrical conditions are obtained with the design outlined in Figure 4.8a. Figure 4.9a and b shows the general connection diagrams with more details of the regulating circuit.

The advantage of the single-core design is simplicity and economy. But there are also a number of disadvantages. The OLTCs are connected to the system and directly exposed to all overvoltages and through faults. The voltage per OLTC step and the current are determined by the specification and do not always permit an optimal economical choice of the OLTC. The short-circuit impedance of the PST varies between a maximum and zero. Therefore, it cannot be planned that the PST will contribute to the limitation of fault currents in the system.

The advantage of the symmetrical design (Figure 4.9a) is that the phase-shift angle is the only parameter that influences the power flow. The design needs two single-phase OLTCs (for low ratings, one two-phase OLTC may be used instead) per phase or two three-phase OLTCs.

Figure 4.9b shows an unsymmetrical solution. Only one-half of the regulating windings is used. The number of necessary OLTCs is reduced, but the ratio between source voltage and load voltage changes with the phase-shift angle and additionally influences the power flow.

A solution that often is used for transformers interconnecting two systems is shown in Figure 4.10. The tap winding of a regulating transformer can be connected to a different phase, causing a voltage shift between the regulated winding and the other windings of the unit. The regulated winding normally is connected to the source side, but indirect regulation of the load-side is also possible. The change

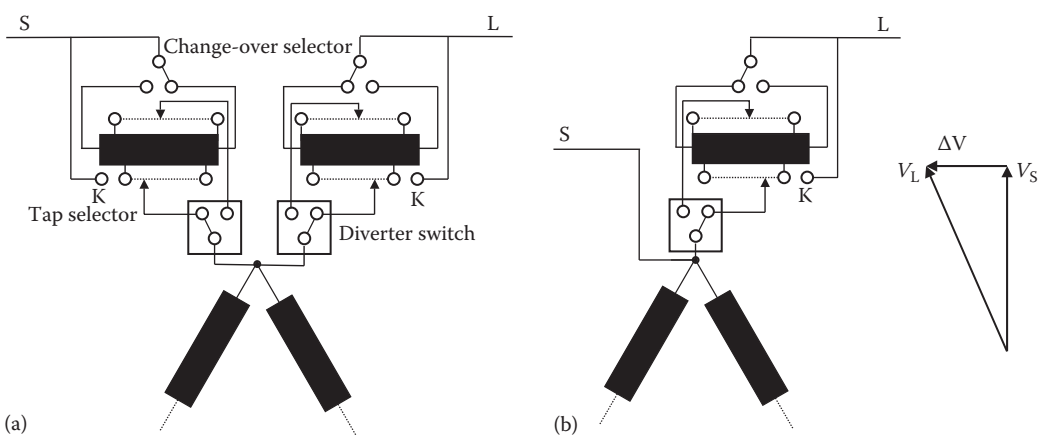

FIGURE 4.9 (a) Single-core symmetrical PST. (b) Single-core unsymmetrical PST.

www.EngineeringEbooksPdf.com

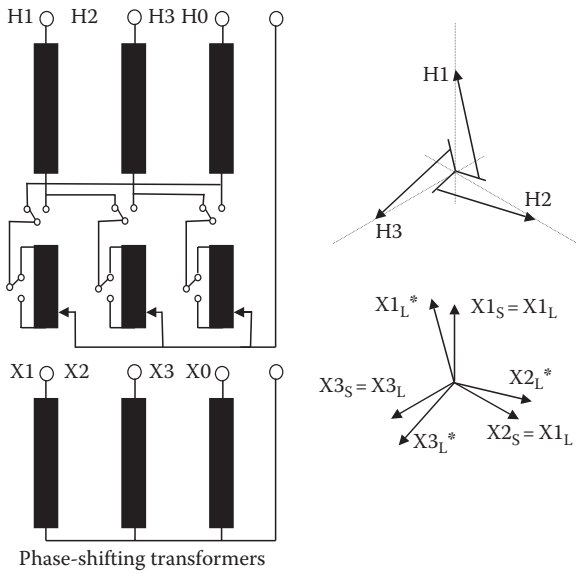

FIGURE 4.10 Regulating transformer with PST effect.

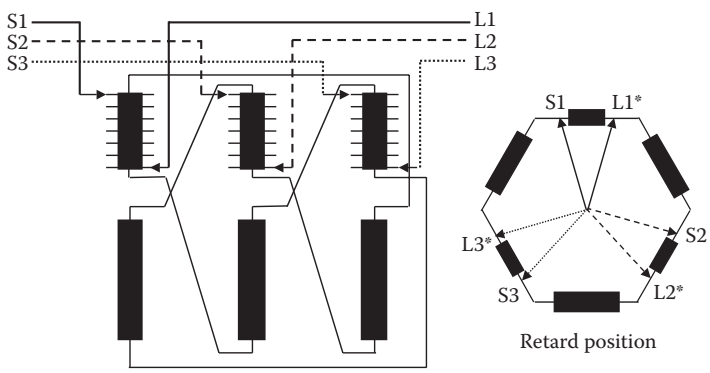

FIGURE 4.11 Delta-hexagonal PST.

from the normal regulating transformer state to the phase-shifting state is possible in the middle position of the OLTC without the need to switch off the unit.

Another solution of a symmetrical PST, the delta-hexagonal phase-shifting transformer, is shown in Figure 4.11.

4.5.3 Two-Core Design

The most commonly used circuit for a two-core design is shown in Figure 4.12. This configuration consists of a series unit and a main unit. For smaller ratings and lower voltages, two-core PSTs can be built into a single tank, while larger ratings and higher-voltage PSTs require a two-tank design.

The advantage of a two-core design is the flexibility in selecting the step voltage and the current of the regulating winding. These can be optimized in line with the voltage and current ratings of the OLTC. Since OLTCs have limited current ratings and step voltages per phase as well as limited switching capacity, they are the main limiting features for the maximum possible rating of PSTs. More than one OLTC per phase may have to be utilized for very large ratings.

www.EngineeringEbooksPdf.com

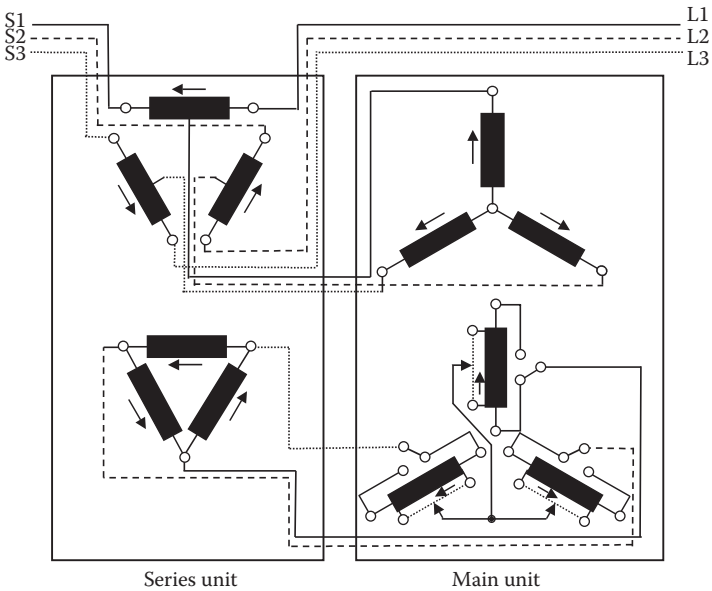

FIGURE 4.12 Two-core PST.

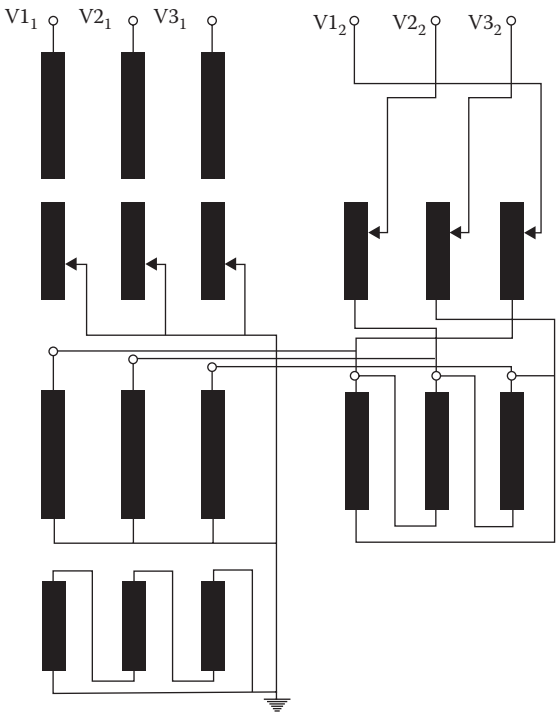

FIGURE 4.13 Quadrature booster—simplified connection diagram.

www.EngineeringEbooksPdf.com

FIGURE 4.14 Quadrature booster set (300 MVA, 50 Hz, 400 ± 12 × 1.25%/115 ± 12 × 1.45° kV). (By Courtesy of EVN Energieversorgung Niederösterreich, Austria and Siemens AG, Munich, Germany.)

Up to a certain rating, three-pole OLTCs can be used; for higher ratings, three single-pole OLTCs are necessary. The OLTC insulation level is independent of the system voltage and can be kept low.

The short-circuit impedance is the sum of the impedances of the main and series transformers. Because the impedance of the series unit is constant and independent from the phase angle, the unit can be designed to be self-protecting, and the variation of the impedance with the phase-shift angle can be kept small when the impedance of the main unit is kept low.

4.5.4 Quadrature Booster Transformers

Quadrature booster transformers are a combination of a regulating power- or auto-transformer with a phase-shifting transformer. The PST, which can be a single- or two-core design, is supplied from the regulated side of the power transformer (Figure 4.13). By this method, the output voltage can be adjusted in a four-quadrant (magnitude and phase) relationship (Figure 4.14).

4.6 Details of Transformer Design

In general, the design characteristics of PSTs do not differ from ordinary power transformers. In the symmetrical case, however, the phase-angle difference of the currents flowing through the two parts of the series winding has to be recognized. The additional magnetic field excited by the self-compensating components in the series winding influences mechanical forces, additional losses, and the short-circuit impedance. Figure 4.15 shows schematically variations of the physical winding arrangements in PSTs.

In Figure 4.15a, a double concentric design of a single-phase PST is shown. This arrangement does not offer any problems with respect to the phase lag between currents and is a standard winding arrangement in shell-type transformers. In core types, the arrangement of the connecting leads from the innermost regulating winding need some attention, but this does not present a real obstacle to the use of this design. On the other hand, the axial arrangement of the regulating winding in core-type transformers, as shown in Figure 4.15b, offers the advantage of direct access and saves space.

www.EngineeringEbooksPdf.com

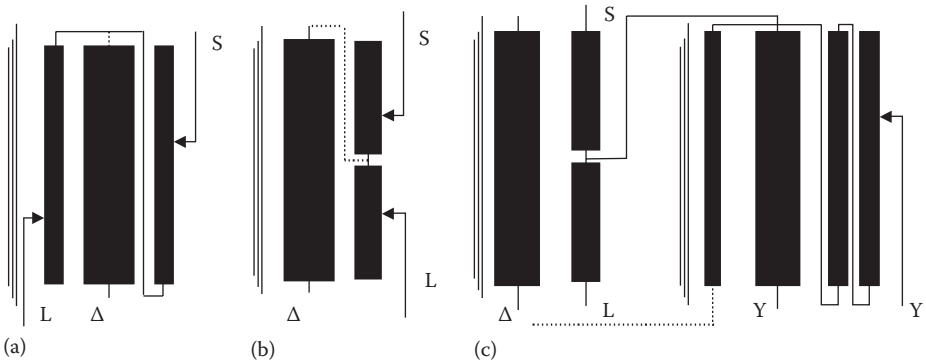

FIGURE 4.15 Winding arrangements. (See text for label a through c descriptors.)

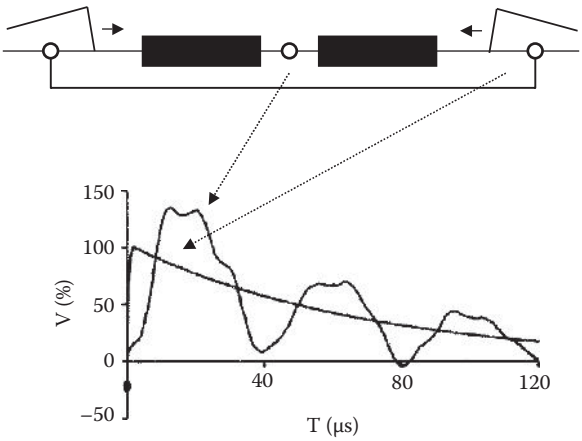

FIGURE 4.16 Lightning impulse response (bypassed PST).

But because the pattern of the stray field is more complicated, thorough field calculations have to be performed using the appropriate computer programs.

It is possible that a client may operate the PST in a bypassed condition. In this case, the source and load terminals are directly connected phasewise. In this state, a lightning impulse would penetrate the series winding from both ends at the same time. Two traveling waves would meet in the middle of the winding and would theoretically be reflected to double the amplitude (Figure 4.16). Therefore the series winding must either be designed with a high internal capacitance or be protected by external or internal surge arresters. A high internal capacitance can be obtained using any of the measures that are used to improve the lightning-impulse voltage distribution along the winding, e.g., interleaving or shielding. Again, the axial arrangement is more advantageous and easier to make self-protecting.

Figure 4.15c shows the arrangement of a two-core design with two coarse and one fine tap winding, which is a variation of the circuit drawn in Figure 4.12 (see also Section 4.7). If a two-tank solution has to be used, the connection between the main and series unit requires an additional set of six high-voltage bushings, which means that a total of nine high-voltage bushings would have to be arranged on the series unit. Because a short circuit between the main and series units could destroy the regulating winding, a direct and encapsulated connection between the two tanks is preferred. This requires a high degree of accuracy in the mechanical dimensions and the need for experienced field engineers to assemble both units on site. If required, special oil-tight insulation systems allow the separation of the two tanks without the need to drain the oil in one or both units. In the latter case, an extra oil-expansion system is needed for the connecting tubes. Figure 4.17 shows a double-tank PST design at a testing site.

www.EngineeringEbooksPdf.com

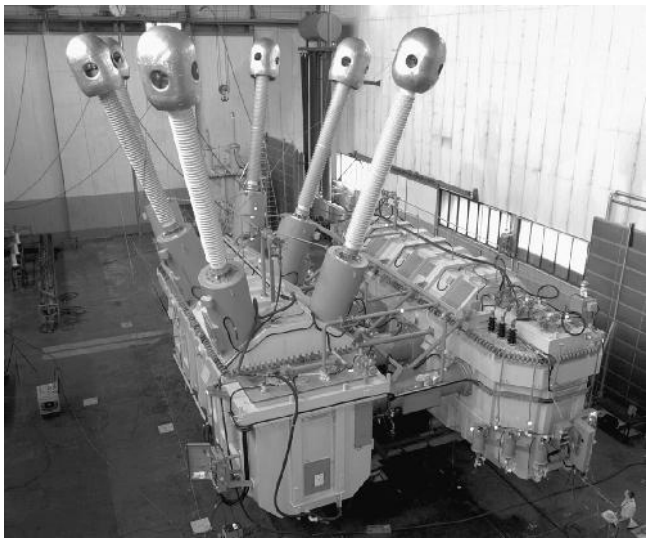

FIGURE 4.17 Two-tank PST at a test site (coolers not assembled) (650 MVA, 60 Hz, 525/525 ± 20 × 1.2° kV). (By Courtesy of VATech Transformatoren, Weiz, Austria [since 2005, Member of Siemens Group].)

4.7 Details of On-Load Tap-Changer Application

OLTCs are subject to numerous limits. The most essential limit is, of course, the current-interrupting or current-breaking capability. In addition to this limit, the voltage per step and the continuous current are also limited. The product of these two limits is generally higher than the capability limit, so the maximum voltage per step and the maximum current cannot be utilized at the same time. Tables 4.1 through 4.3 show examples for design power, voltage per step, and system current as functions of phase-shift angle, throughput power, system voltage, and number of voltage steps.

These limits (e.g., 4000 V/step, 2000 A) determine the type of regulation (the need for only a fine tap winding or a combination of fine and coarse tap windings) and the number of parallel branches. But it must be noted that the mutual induction resulting from the use of a coarse/fine-tap winding configuration also has to be taken into account and may influence the decision.

Another problem that also is not specific to PSTs, but may be more significant, is the possible altering of the potential of the regulating winding when the changeover selector is operated. In this moment, the tap selector is positioned at tap "K" (see Figure 4.18), and the regulating winding is no longer fixed to the potential of the excitation winding. The new potential is determined by the ratio of the capacitances between the regulating winding and the excitation winding and between the regulating winding and ground (location 1 in Figure 4.18). The resulting differential voltage stresses the switching distance of

TABLE 4.1 Design Power of PSTs as a Function of Throughput Power and Phase-Shift Angle, MVA

		Phase-Shift Angle α°				
	Design Power, MVA	10	20	30	40	50
	100	17.4	34.7	51.8	68.4	84.5
	250	43.6	86.8	129.4	171.0	211.3
Throughput power, MVA	500	87.2	173.6	258.8	342.5	422.6
	750	130.7	260.5	388.2	513.0	633.9
	1000	174.3	347.3	517.6	684.0	845.2

www.EngineeringEbooksPdf.com

TABLE 4.2 Step Voltage as a Function of System Voltage and Phase-Shift Angle for a 16-Step OLTC, V

		Phase-Shift Angle α°				
	Step Voltage, V Steps:16	10	20	30	40	50
	69.0	434	865	1,289	1,703	2,104
	115.0	723	1,441	2,148	2,839	3,507
	138.0	868	1,729	2,578	3,406	4,209
	161.0	1,013	2,018	3,007	3,974	4,910
System voltage, kV	230.0	1,447	2,882	4,296	5,677	7,015
	345.0	2,170	4,324	6,444	8,516	10,522
	500.0	3,145	6,266	9,339	12,342	15,250
	765.0	4,812	9,587	14,289	18,883	23,332

TABLE 4.3 System Current as a Function of System Voltage and Throughput Power, A

		Throughput Power, MVA				
	System Current, A	100	250	500	750	1000
	69.0	837	2092	4184	6276	8367
	115.0	502	1255	2510	3765	5020
	138.0	418	1046	2092	3138	4184
	161.0	359	897	1793	3974	3586
System voltage, kV	230.0	251	628	1255	2690	2510
	345.0	167	418	837	1883	1673
	500.0	115	289	577	1255	1155
	765.0	75	189	377	866	755

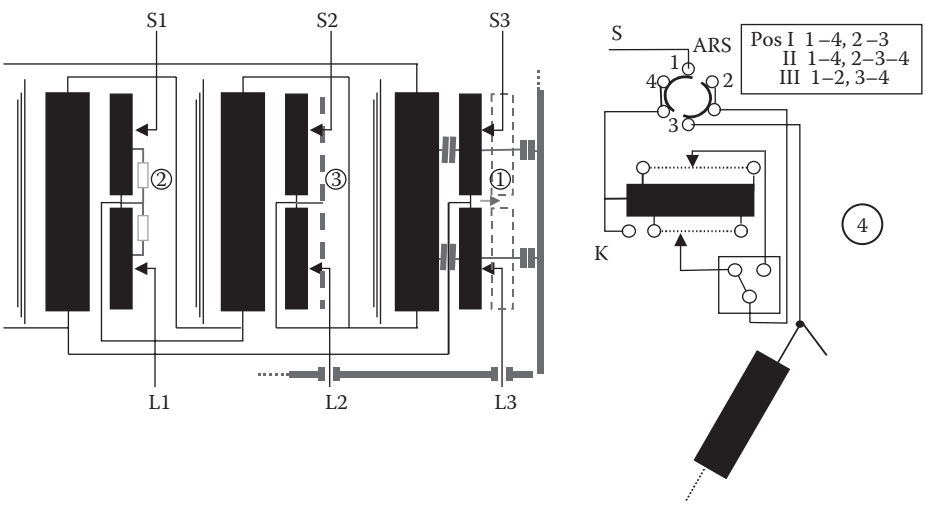

FIGURE 4.18 Control of the tap-winding potential during changeover selector operation.

www.EngineeringEbooksPdf.com

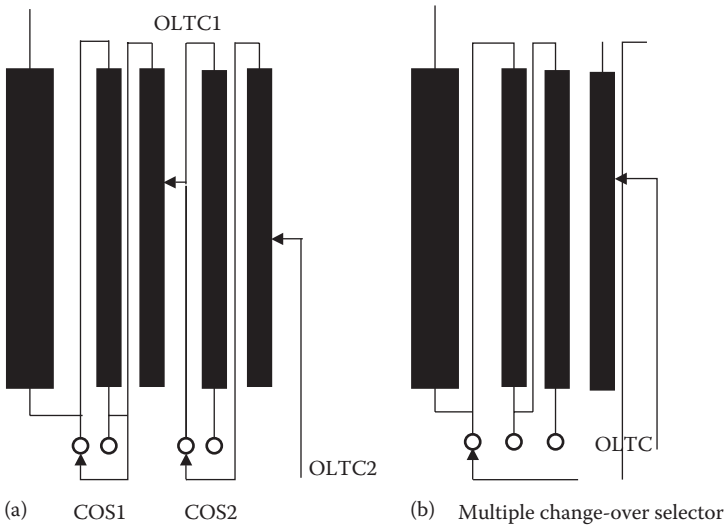

FIGURE 4.19 Use of more than one OLTC and/or multiple changeover selector. (See text for label a and b descriptors.)

the opening changeover selector and may cause discharges during the operation. This can be prevented either by connecting the regulating winding to the excitation winding by a resistor (location 2) or by a static shield (location 3) or by using a double-reversing (advanced-retard) changeover selector switch (ARS switch, location 4).

When the voltage per step cannot be kept within the OLTC limit, either a second OLTC must be used (Figure 4.19a), or the number of steps can be doubled by using an additional coarse tap winding. Two or more of those windings are also possible (Figure 4.19b). An appropriate multiple changeover selector must be used.

Figure 4.20 shows a two-tank PST design with three coarse and one fine tap winding at a field site. This design was forced by the limitation of the mutual induction between the fine and coarse tap windings.

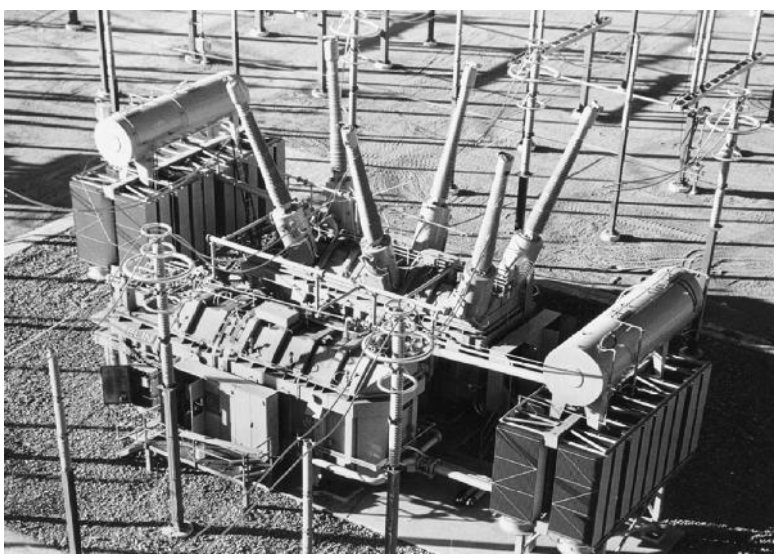

FIGURE 4.20 Two-tank PST with three coarse- and one fine-tap winding at field site (650 MVA, 60 Hz, 525/525 ± 12 × 1.2° kV). (By Courtesy of VATech Transformatoren, Weiz, Austria [since 2005, Member of Siemens Group].)

www.EngineeringEbooksPdf.com

4.8 Other Aspects

4.8.1 Connection

PSTs can be operated in parallel or series connection or a combination of these two. It is assumed that all n units are of equivalent design.

4.8.1.1 Parallel Connection

- The throughput power of a single unit is equal to 1/n of the total required throughput power.
- The phase-shift angle of all units is equal to the required phase-shift angle.
- The impedance of a single unit in ohms must be n times the required total impedance in ohms.
- The impedance of a single unit in percent, referred to 1/n of the total throughput power, is equal to the total impedance in percent.
- When one unit is lost, the total throughput power decreases to (n − 1)/n, and the impedance in ohms increases to n/(n − 1) of the original value.

4.8.1.2 Series Connection

- The throughput power of a single unit is equal to the total throughput power.
- The phase-shift angle of a single unit is equal to 1/n of the total phase-shift angle.
- The impedance of a single unit in ohms is 1/n of the total impedance.
- The impedance of a single unit in percent, referred to the throughput power, is 1/n of the total impedance in percent.
- When one unit is lost or bypassed, the throughput power remains constant, and the total phase-shift angle and the total impedance in ohms and in percent are reduced by (n − 1)/n.

4.8.2 Tests

In case of a two-tank design, the PST should be completely assembled with the two units connected together, as in service.

Auxiliary bushings may be necessary to make inner windings accessible for measurements of resistances, losses, and temperatures or to allow dielectric tests.

4.8.2.1 Special Dielectric Tests

When bypassing of the unit is a specified operating condition, a special lightning impulse and a special switching impulse has to be performed with both terminals of the series winding connected.

4.8.2.2 No-Load Phase-Shift Angle

From Figure 4.5, the phase shift angle can be calculated as

$$\alpha = \arccos \frac{V_S^2 + V_L^2 - V_{S-L}^2}{2 * V_S * V_L} \tag{4.41}$$

with V_S, V_L, and V_{S-L} being the absolute values of the voltages of corresponding source and load terminals to ground and between them, respectively.

To differentiate between advanced and retard angle, the following criteria can be used: advanced phase-shift angle:

$$V_{S1} - V_{S2} > V_{S1} - V_{L2}$$

www.EngineeringEbooksPdf.com

retard phase-shift angle:

$$V_{S1} - V_{S2} < V_{S1} - V_{L2}$$

The tolerance depends on the accuracy of the voltages. ANSI/IEEE C57.135 recommends that this be 1%. This considers the worst case, when V_S and V_L are at the upper tolerance limit (1.005) and V_{S-L} is at the lower limit (0.995).

Bibliography

ANSI/IEEE, *Guide for the Application, Specification and Testing of Phase-Shifting Transformers*, ANSI/IEEE C57.135–2001, Institute of Electrical and Electronics Engineers, Piscataway, NJ, 2001.

Brown, F.B., Frere, G.R., Lundquist, T.G., Thallam, R.S., Seitlinger, W., Trummer, E.R., Hansen, N.W., and Moore, H., The first 525 kV phase shifting transformer—Conception to service, in *Proceedings of the 64th Annual Conference of Doble Clients*, Boston, MA, 1997.

Krämer, A., *On-Load Tap-Changers for Power Transformers*, Maschinenfabrik Reinhausen, Regensburg, Germany, 2000.

Seitlinger, W., Phase shifting transformers—Discussion of specific characteristics, CIGRE Paper 12–306, CIGRE, Paris, France, 1998.

www.EngineeringEbooksPdf.com

www.EngineeringEbooksPdf.com

5

Rectifier Transformers

5.1 Background and Historical Perspective 5-2
5.2 New Terminology and Definitions 5-3
Fundamental kVA • Harmonic Loss Factor
5.3 Rectifier Circuits 5-4
5.4 Commutating Impedance 5-7
5.5 Secondary Coupling 5-8
5.6 Generation of Harmonics 5-10
5.7 Harmonic Spectrum 5-12
5.8 Effects of Harmonic Currents on Transformers 5-14
5.9 Thermal Tests 5-17
5.10 Harmonic Cancellation 5-18
5.11 DC Current Content 5-21
5.12 Transformers Energized from a Converter/Inverter 5-22
5.13 Electrostatic Ground Shield 5-22
5.14 Load Conditions 5-23
5.15 Interphase Transformers 5-23
5.16 Rectifier Transformer Dielectric Stresses 5-23
5.17 Short-Circuit Problems Associated with Rectifier Transformers 5-24
References 5-24
Bibliography 5-24

Sheldon P. Kennedy
Niagara Transformer Corporation

Power electronic circuits can convert alternating current (ac) to direct current (dc). These are called rectifier circuits. Power electronic circuits can also convert dc to ac. These are called inverter circuits. Both of these circuits are considered to be converters. A transformer that has one of its windings connected to one of these circuits, as a dedicated transformer, is a converter transformer, or rectifier transformer. IEC standards refer to these transformers as converter transformers, while IEEE standards refer to these transformers as rectifier transformers. Because it is IEEE practice to refer to these transformers as rectifier transformers, that same term is used throughout this discussion.

Transformers connected to circuits with a variety of loads, but which may contain some electronic circuits that produce harmonics, are not considered to be rectifier transformers. However, they may have harmonic heating effects similar to rectifier transformers. Those transformers are covered under IEEE Recommended Practice for Establishing Transformer Capability when Supplying Non-Sinusoidal Load Currents, ANSI/IEEE C57.110.

Electronic circuits provide many types of control today, and their use is proliferating. These circuits are generally more efficient than previous types of control, and they are applied in many types of everyday use. Rectifier circuits are used to provide high-current dc for electrochemical processes like chlorine production as well as copper and aluminum production. They are also used in variable-speed-drive motor controls, transit-traction applications, mining applications, electric furnace applications,

www.EngineeringEbooksPdf.com

higher-voltage laboratory-type experiments, high-voltage direct-current power transmission (HVDC), static precipitators, and others. While HVDC transmission and static precipitators are not directly covered in this chapter, much of the basic information still applies.

5.1 Background and Historical Perspective

Rectifier transformers can be liquid-immersed, dry-type, or cast-coil technology. Dry-type transformers were primarily used in distribution-voltage classes. Impregnation systems have improved with the development of vacuum pressure impregnation (VPI) technology. These types of transformers have been developed to 34 and 46 kV classes, although basic impulse-insulation levels (BIL) are often less than in liquid-immersed transformers. Cast-coil technology has developed as a more rugged, nonliquid-filled technology. Both of these types of transformers—dry type and cast coil—are limited by voltage and kVA size. They have advantages over liquid-filled transformers for fire protection since they have no liquids to ignite. However, liquid-immersed transformers can be built to all voltage levels and current levels. High-fire-point fluids can be used for fire-protection considerations. Auxiliary cooling can be utilized to cool larger levels of power loss developed in higher-current applications.

The early rectifiers were pool-cathode mercury rectifiers. These had high levels of short-circuit failures on transformers and suffered from arc-backs. When one phase faulted, all phases would dump through the faulted phase. So on a six-phase transformer with 10% impedance, instead of 10 times rated current during a fault, it could develop up to 60 times rated current. Usually the fault would not be this high, but it could still be in the area of 40 times rated current. This is an extremely high fault current for a transformer to withstand. Transformers had to be built very ruggedly and were extremely heavy compared with most transformers, which greatly increased the cost of these systems. They also had the disadvantage of the environmental problems associated with mercury. These transformers were built to comply with ANSI/IEEE C57.18-1964, Pool Cathode Mercury-Arc Rectifier Transformer. The latest revision of this standard was 1964, but it was reaffirmed later.

Semiconductor rectifiers advanced higher in voltage and current capability, and finally, semiconductor technology developed to the point that pool-cathode mercury-arc rectifiers were replaced. Semiconductor rectifiers also brought the ability of control with thyristors in addition to diodes, without the use of magnetic devices such as the saturable core reactors and amplistats that had been used for this purpose. They did have the advantage of little harmonic production, but they are less efficient than semiconductor devices. Nevertheless, they are still used in many applications today with diodes.

The new problem presented by semiconductor technology was harmonic current. The operation of the semiconductor rectifier produces harmonic voltages and currents. The harmonic currents are at higher frequencies than the fundamental frequency of the transformer. These higher-frequency currents cause high levels of eddy-current losses and other stray losses in other parts of the transformer. This can create potentially high temperatures, which degrade the insulation of the transformer and can cause early failure of the transformer.

Problems of failures were reported to the IEEE Power Engineering Society Transformers Committee. These were typically hottest-spot failures in the windings. In 1981, a new standard began development. Rather than just updating the old mercury-arc rectifier standard, a new standard was created—ANSI/IEEE C57.18.10-1998, Practices and Requirements for Semiconductor Power Rectifier Transformers. In a similar time frame, IEC developed its own standard, IEC 61378-1-1997, Convertor Transformers—Part 1: Transformers for Industrial Applications. Technologies and methods have continued to evolve, and these standards have continued to be revised since that time to keep in step. The IEEE standard took an inordinate amount of time to develop due to the development of new products, new terminology, the definition of harmonics, the estimated harmonic effects on losses and heating, individual company practices, conflicting standards, harmonization with the IEC's efforts to develop a standard, and development of appropriate test methods, to name a few of the obstacles.

www.EngineeringEbooksPdf.com

Important developments occurred during the preparation of these standards. Some involve the specification of transformers, some involve performance characteristics and calculations, and some involve the testing of transformers.

5.2 New Terminology and Definitions

At least two new terms were defined in ANSI/IEEE C57.18.10. Both are important in the specification of rectifier transformers.

5.2.1 Fundamental kVA

The traditional IEEE method for rating a rectifier transformer has always been the root-mean-square (rms) kVA drawn from the primary line. This is still the method used to develop all of the tables and figures given in ANSI/IEEE C57.18.10, Clause 10. However, the IEC converter transformer standards define the kVA by the fundamental kVA drawn from the primary line. The rms-rated kVA method is based on the rms equivalent of a rectangular current waveshape based on the dc rated load commutated with zero commutating angle. The fundamental kVA method is based on the rms equivalent of the fundamental component of the line current. There are pros and cons to both methods. IEC allows only the fundamental-kVA-method rating with an "in some countries" clause to accommodate North American practice. The logic behind this rating is that the transformer manufacturer will only be able to accurately test losses at the fundamental frequency. The manufacturer cannot accurately test losses with the complex family of harmonics present on the system. Therefore, according to IEC, it is only proper to rate the transformer at the fundamental frequency. Transformer rating and test data will then correspond accurately.

The traditional IEEE rms-kVA rating method will not be exactly accurate at test. However, it does represent more accurately what a user sees as meter readings on the primary side of the transformer. Users feel strongly that this is a better method, and this is what their loading is based on.

ANSI/IEEE C57.18.10 allows for both kVA methods. It is important for a user to understand the difference between these two methods so that the user can specify which rating is wanted.

5.2.2 Harmonic Loss Factor

The term *harmonic loss factor*, F_{HL}, was developed by IEEE and IEC as a method to define the summation of harmonic terms that can be used as a multiplier on winding eddy-current losses and other stray losses. These items are separated into two factors, winding eddy-current harmonic loss factor, $F_{HL\text{-}WE}$, and the other-stray-loss harmonic loss factor, $F_{HL\text{-}OSL}$. These are used as multipliers of their respective losses as measured at test at the fundamental frequency. Both factors can be normalized to either the fundamental current or the rms current.

These terms are similar to the values used by the Underwriters Laboratories (UL) K-factor multiplier, except that stray losses are amplified by a lesser factor than the winding eddy-current losses. The term $F_{HL\text{-}WE}$ comes mathematically closest to being like the term K-factor. It must be noted that the term K-factor was never an IEEE term but only a UL definition. The new IEEE Recommended Practice for Establishing Transformer Capability when Supplying Non-Sinusoidal Load Currents, ANSI/IEEE C57.100, gives a very good explanation of these terms and comparisons to the UL definition of K-factor. The Transformers Committee of the IEEE Power Engineering Society has accepted the term *harmonic loss factor* as more mathematically and physically correct than the term K-factor. K-factor is used in UL standards, which are safety standards. IEEE standards are engineering standards.

In their most simple form, these terms for harmonic loss factor can be defined as follows:

$$F_{HL\text{-}WE} = \sum_{1}^{n} I_h(pu)^2 h^2 \tag{5.1}$$

www.EngineeringEbooksPdf.com

and

$$F_{HL\text{-}OSL} = \sum_{1}^{n} I_h(pu)^2 h^{0.8} \tag{5.2}$$

where

$F_{HL\text{-}WE}$ represents winding eddy-current harmonic loss factor
$F_{HL\text{-}OSL}$ represents other-stray-loss harmonic loss factor
I_h represents harmonic component of current of the order indicated by the subscript h
h represents harmonic order

As is evident, the primary difference is that the other stray losses are only increased by a harmonic exponent factor of 0.8. Bus-bar, eddy-current losses are also increased by a harmonic exponent factor of 0.8. Winding eddy-current losses are increased by a harmonic exponent factor of 2. The factor of 0.8 or less has been verified by studies by manufacturers in the IEC development and has been accepted in ANSI/IEEE C57.18.10. Other stray losses occur in core clamping structures, tank walls, or enclosure walls. On the other hand, current-carrying conductors are more susceptible to heating effects due to the skin effect of the materials. Either the harmonic spectrum or the harmonic loss factor must be supplied by the specifying engineer to the transformer manufacturer.

5.3 Rectifier Circuits

Rectifier circuits often utilize multiple-circuit windings in transformers. This is done to minimize harmonics on the system or to subdivide the rectifier circuit to reduce current or voltage to the rectifier. Since different windings experience different harmonics on multiple-circuit transformers, the kVA ratings of the windings do not add arithmetically. Rather, they are rated on the basis of the rms current carried by the winding. This is an area where the rms-kVA rating of the windings is important. The fundamental kVA rating would add arithmetically since harmonics would not be a factor.

Rectifier circuits can be either single way or double way. Single-way circuits fire only on one side of the waveform and therefore deliver dc. Double-way circuits fire on both side of the waveform.

A variety of common rectifier circuits are shown in Figures 5.1 through 5.11. Table 9 in ANSI/IEEE C57.18.10 shows the properties of the more common circuits, including the currents and voltages of the windings. The dc winding—the winding connected to the rectifier—is usually the secondary winding, unless it is an inverter transformer. The ac winding—the winding connected to the system—is usually the primary winding, unless it is an inverter transformer.

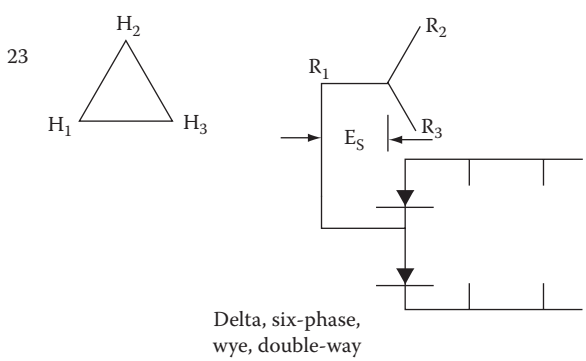

FIGURE 5.1 ANSI circuit 23. (From IEEE, Standard practices and requirements for semiconductor power rectifier transformers, IEEE C57.18.10.1998, R2008, Institute of Electrical and Electronics Engineers, Piscataway, NJ, 2008. © IEEE 1998. With permission.)

www.EngineeringEbooksPdf.com

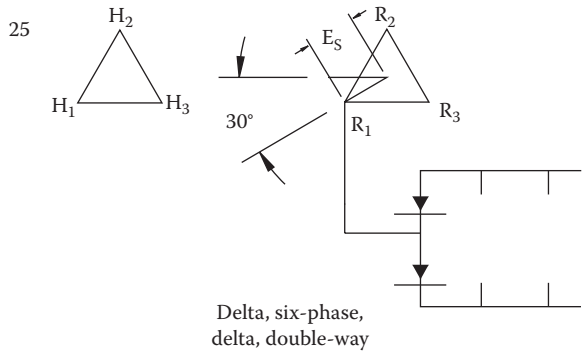

FIGURE 5.2 ANSI circuit 25. (From IEEE, Standard practices and requirements for semiconductor power rectifier transformers, IEEE C57.18.10.1998, R2008, Institute of Electrical and Electronics Engineers, Piscataway, NJ, 2008. © IEEE 1998. With permission.)

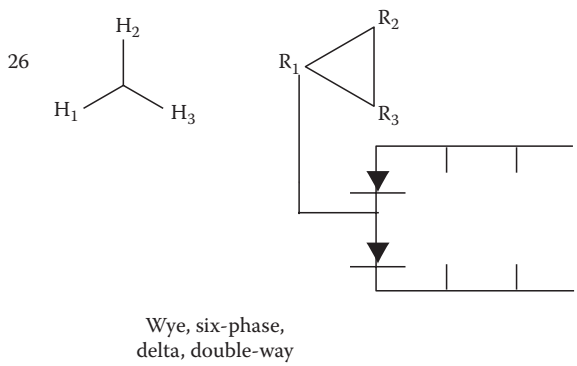

FIGURE 5.3 ANSI circuit 26. (From IEEE, Standard practices and requirements for semiconductor power rectifier transformers, IEEE C57.18.10.1998, R2008, Institute of Electrical and Electronics Engineers, Piscataway, NJ, 2008. © IEEE 1998. With permission.)

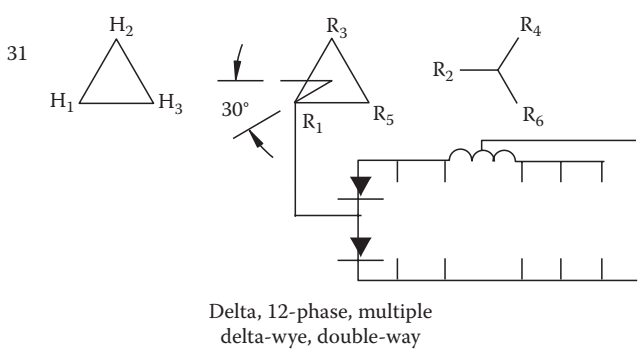

FIGURE 5.4 ANSI circuit 31. (From IEEE, Standard practices and requirements for semiconductor power rectifier transformers, IEEE C57.18.10.1998, R2008, Institute of Electrical and Electronics Engineers, Piscataway, NJ, 2008. © IEEE 1998. With permission.)

www.EngineeringEbooksPdf.com

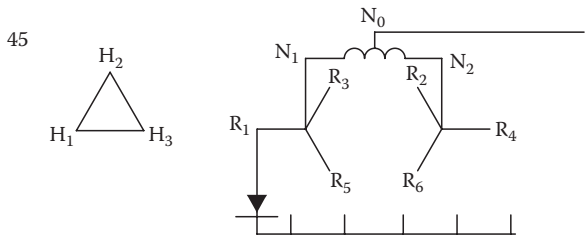

Delta, six-phase, double wye

FIGURE 5.5 ANSI circuit 45. (From IEEE, Standard practices and requirements for semiconductor power rectifier transformers, IEEE C57.18.10.1998, R2008, Institute of Electrical and Electronics Engineers, Piscataway, NJ, 2008. © IEEE 1998. With permission.)

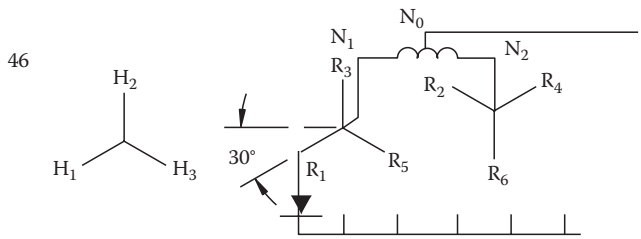

Wye, six-phase, double wye

FIGURE 5.6 ANSI circuit 46. (From IEEE, Standard practices and requirements for semiconductor power rectifier transformers, IEEE C57.18.10.1998, R2008, Institute of Electrical and Electronics Engineers, Piscataway, NJ, 2008. © IEEE 1998. With permission.)

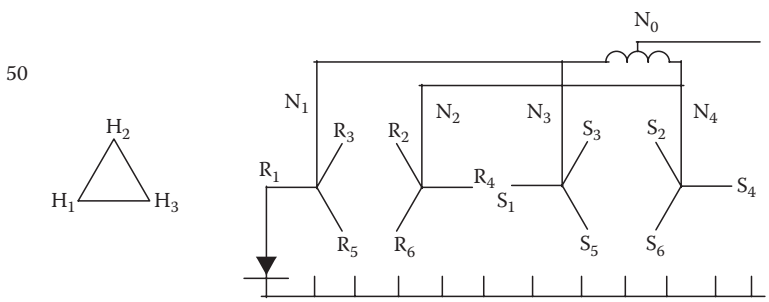

Delta, six-phase, parallel double wye
with single interphase transformer

FIGURE 5.7 ANSI circuit 50. (From IEEE, Standard practices and requirements for semiconductor power rectifier transformers, IEEE C57.18.10.1998, R2008, Institute of Electrical and Electronics Engineers, Piscataway, NJ, 2008. © IEEE 1998. With permission.)

A six-pulse single-way transformer would have to have two secondary windings, like a Circuit 45 transformer (Figure 5.5), which has a delta primary winding with double-wye secondary windings. A six-pulse double-way transformer can be a simple two-winding transformer, like a Circuit 23 transformer (Figure 5.1), which is a simple delta-wye transformer. This is due to the number of pulses each circuit has over the normal period of a sine wave.

www.EngineeringEbooksPdf.com

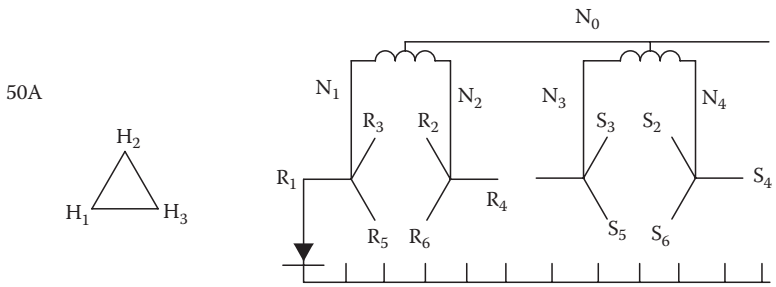

FIGURE 5.8 ANSI circuit 50A. (From IEEE, Standard practices and requirements for semiconductor power rectifier transformers, IEEE C57.18.10.1998, R2008, Institute of Electrical and Electronics Engineers, Piscataway, NJ, 2008. © IEEE 1998. With permission.)

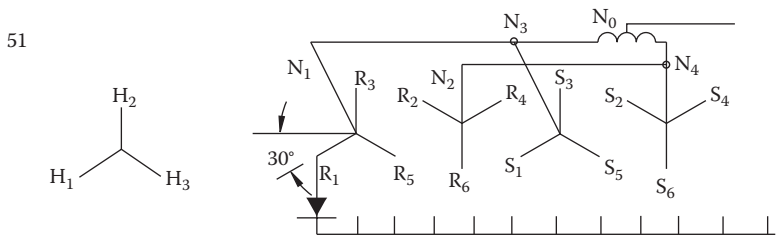

FIGURE 5.9 ANSI circuit 51. (From IEEE, Standard practices and requirements for semiconductor power rectifier transformers, IEEE C57.18.10.1998, R2008, Institute of Electrical and Electronics Engineers, Piscataway, NJ, 2008. © IEEE 1998. With permission.)

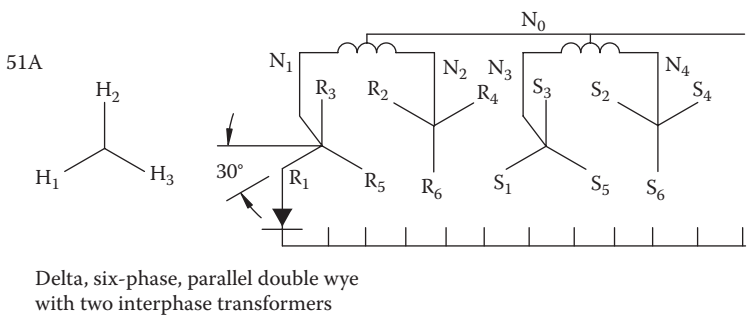

FIGURE 5.10 ANSI circuit 51A. (From IEEE, Standard practices and requirements for semiconductor power rectifier transformers, IEEE C57.18.10.1998, R2008, Institute of Electrical and Electronics Engineers, Piscataway, NJ, 2008. © IEEE 1998. With permission.)

5.4 Commutating Impedance

Commutating impedance is defined as one-half the total impedance in the commutating circuit expressed in ohms referred to the total secondary winding. It is often expressed as percent impedance on a secondary kVA base. For wye, star, and multiple-wye circuits, this is the same as derived in ohms on a phase-to-neutral voltage basis. With diametric and zigzag circuits, it must be expressed as one-half the

www.EngineeringEbooksPdf.com

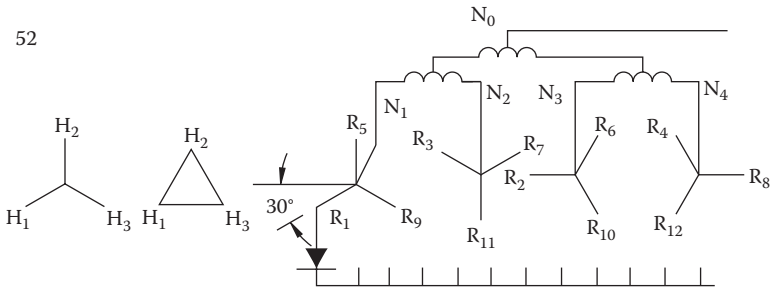

Wye delta, 12-phase, quadruple wye

FIGURE 5.11 ANSI circuit 52. (From IEEE, Standard practices and requirements for semiconductor power rectifier transformers, IEEE C57.18.10.1998, R2008, Institute of Electrical and Electronics Engineers, Piscataway, NJ, 2008. © IEEE 1998. With permission.)

total due to both halves being mutually coupled on the same core leg or phase. This is not to be confused with the short-circuit impedance, that is, the impedance with all secondary windings shorted. Care must be taken when expressing these values to be careful of the kVA base used in each. The commutating impedance is the impedance with one secondary winding shorted, and it is usually expressed on its own kVA base, although it can also be expressed on the primary kVA base if desired.

Care must be taken when specifying these values to the transformer manufacturer. The impedance value, whether it is commutating impedance or short-circuit impedance, and kVA base are extremely important.

Use ANSI/IEEE C57.18.10 as a reference for commutating impedance. The tables of circuits in this reference are also useful.

5.5 Secondary Coupling

Three-winding transformers with one primary winding and two secondary windings, such as Circuit 31 (Figure 5.4), Circuit 45 (Figure 5.5), and Circuit 46 (Figure 5.6), can be constructed as tightly coupled secondary windings or as loosely coupled or uncoupled secondary windings. The leakage reactance is common to the tightly coupled secondary windings but is independent for the uncoupled secondary windings.

If two separate transformers were constructed on separate cores, the couplings would be completely independent of one another, that is, uncoupled. When the windings of one of these transformers are combined on a common core, there can be varying degrees of coupling, depending on the transformer construction.

Some transformers must be made with tightly coupled windings. This is commonly accomplished by winding the secondary windings in an interleaved or bifilar fashion. This is almost always done with low-voltage, high-current windings. Higher-voltage windings would have high-voltage stresses from this type of construction. However, the higher-current windings also benefit from the harmonic cancellation resulting from the close coupling of the secondary windings. This type of construction is usually required with Circuit 45 and 46 transformers and other single-way double-wye transformers. Such transformers would suffer from three-pulse harmonics without the tight coupling of the secondary windings.

Secondary coupling is used in all types of traction-duty transformers. This offers the advantage of low commutating impedance with high short-circuit impedance. Harmonic cancellation also is accomplished in the secondary windings.

The degree of coupling affects the magnitude of the fault current that can be produced at short circuit. If secondary circuits are paralleled, unbalanced commutation impedances can produce high fault currents. The degree of coupling can also affect the voltage regulation at high overloads, as can be seen in traction service or high-pulse duty.

The degree of coupling also influences the voltage regulation when overloads are high, say in the range of 200% or higher. When developing these values, the impedance can be found mostly in the primary

www.EngineeringEbooksPdf.com

windings or in the secondary windings, depending on the transformer construction. Equations 5.3 through 5.5 will bear this out when used on different types of three-winding rectifier transformers. With some constructions, all of the impedance is in the secondary winding, and the primary winding can actually calculate as negative impedance. This can be beneficial in high overload conditions for 12-pulse converters.

Three-winding transformers are usually not completely coupled or uncoupled in practicality. The degree of coupling varies between 1 and 0, where 0 means the secondary windings are completely uncoupled. When the coupling is a 1, the secondary windings are completely coupled. Anything between is partial coupling, and the precise value gives an appraisal of the degree of coupling. If a particular coupling is required, it must be specified to the transformer manufacturer.

Three-winding transformers with one delta secondary winding and one wye secondary winding (an ANSI Circuit 31) are the transformers where the coupling can be accomplished with a coupling from nearly 0 to nearly unity. The common types of construction for three-winding rectifier transformer windings are shown in Figure 5.12a through e.

To determine the degree of coupling, a series of impedance tests are required as explained in ANSI/IEEE C57.18.10, Clause 8.6.3. An impedance test is done where each secondary is shorted in turn. For commutating impedance, this is done at the secondary kVA rating or base. However, for the purposes of this calculation, it should be calculated at the primary kVA base in order to keep all terms in Equations 5.3 through 5.5 on the same base. Finally, the short-circuit impedance test is performed, where both secondary windings are shorted and primary current of sufficient magnitude is applied to the transformer to obtain the primary kVA rating.

For the purposes of this discussion and Figure 5.13, we will assume that the two secondary impedances are equal. In reality, the two values are usually slightly different. This would make the calculations somewhat more complicated. The degree of coupling may be somewhat different based on this simplification.

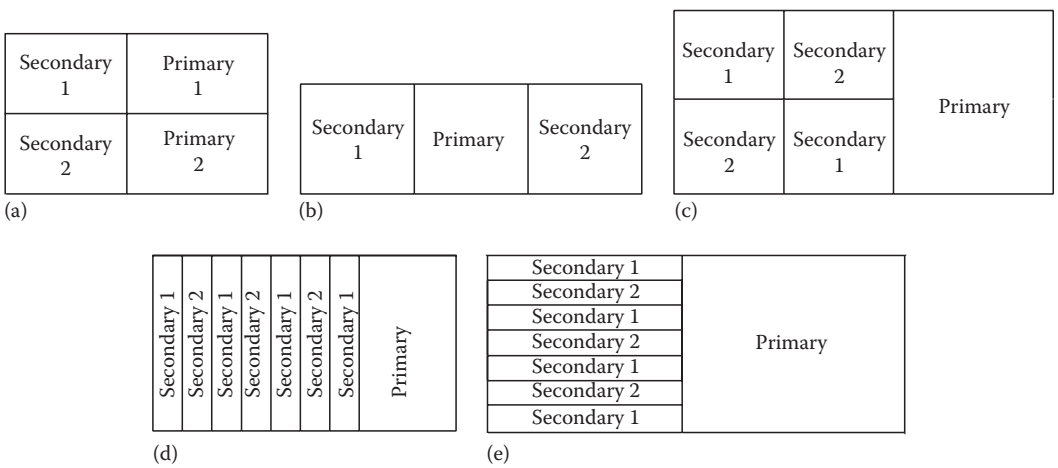

FIGURE 5.12 (a) Two-tier or stacked coil arrangement. (b) Concentric coil arrangement. (c) Split stacked secondary arrangement. (d) Interleaved or bifilar secondary arrangement. (e) Interleaved helical secondary arrangement.

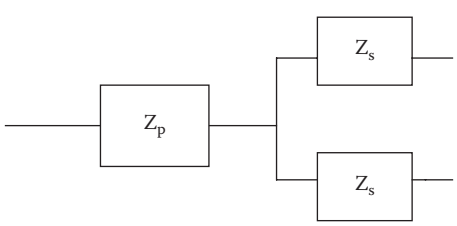

FIGURE 5.13 Impedance diagram of a three-winding transformer.

www.EngineeringEbooksPdf.com

The variables depicted in Figure 5.13 are as follows:

Z_p = primary impedance
Z_s = secondary impedance

From the results of the impedance tests, we have the short-circuit impedance and the commutating impedance, both on a primary kVA base. We can then express the two terms as follows:

The commutating impedance is

$$Z_c = Z_p + Z_s \tag{5.3}$$

The short-circuit impedance is

$$Z_{sc} = Z_p + \frac{Z_s}{2} \tag{5.4}$$

From the results of the tests, solve the two simultaneous equations (Equations 5.3 and 5.4) for the value of the primary impedance. This value and the commutating impedance (Equation 5.3) are the values needed to calculate the degree of coupling.

The coupling factor, K, is

$$K = \frac{Z_p}{Z_c} \tag{5.5}$$

If the coupling factor is 0, the secondary windings are completely uncoupled, and the primary impedance is 0. When the coupling factor is unity, the secondary windings are completely coupled, and the secondary impedance is 0. Values in between indicate partial coupling.

The derived values can be further broken down into reactance and resistance, which gives a closer definition of the coupling factor if required.

Each of the transformer types shown in Figure 5.12 gives a different coupling factor, and only the interleaved types provide close coupling. The coil design should be matched to the coupling desired by the user. The designs in Figure 5.12a and b are loosely coupled. The design in Figure 5.12c is rather tightly coupled, while the designs in Figure 5.12d and e are very tightly coupled. The user must specify to the transformer manufacturer the type of coupling desired.

5.6 Generation of Harmonics

Semiconductor power converters for both ac and dc conversions have long been known to produce harmonic currents that affect other electrical equipment. IEEE 519, IEEE Recommended Practices and Requirements for Harmonic Control in Electric Power Systems, is an excellent source for discussion of the generation and amplitudes of the harmonic currents discussed.

Figure 5.14 shows a three-phase bridge rectifier. A periodic switching converts electrical power from one form to another. A dc voltage with superimposed high-frequency ripple is produced. The ripple voltage consists of the supply voltage with a frequency of multiples of six times the fundamental frequency. This can be done using either diode rectifiers or thyristors.

Energy balance and Fourier analysis of the square waves confirms that each 6n harmonic in the dc voltage requires harmonic currents of frequencies of 6n + 1 and 6n − 1 in the ac line. The magnitude of the harmonic current is essentially inversely proportional to the harmonic number, or a value of 1/h.

This is true of all converters. Once the number of pulses is determined from a converter, the harmonics generated will begin to be generated on either side of the pulse number. So a six-pulse converter

www.EngineeringEbooksPdf.com

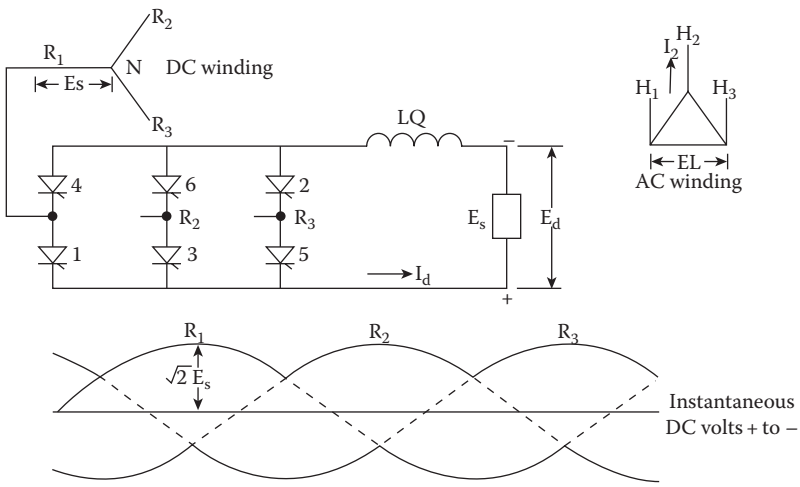

FIGURE 5.14 Three-phase bridge rectifier.

begins to generate harmonics on the 5th and 7th harmonics, then again on the 11th and 13th harmonics, and so on. A 12-pulse converter will begin to generate harmonics on the 11th and 13th harmonics, and again on the 23rd and 25th harmonics, and so on. In order to reduce harmonics, topologies are developed to increase the number of pulses. This can be done using more sophisticated converters or by using multiple converters with phase shifts. From this, we can express the preceding text in a general formula for all pulse converters as per Equation 5.6:

$$h = kq \pm 1 \tag{5.6}$$

where

k represents any integer

q represents converter pulse number

To determine the required phase shift angles of the windings to achieve the harmonic cancellation desired, divide 360° by the pulse number:

$$\text{Phase shift angle} = \frac{360°}{q}$$

Table 5.1 shows a variety of theoretical harmonics that are produced based on the pulse number of the rectifier system. It should be emphasized that these are theoretical maximum magnitudes. In reality, harmonics are generally reduced due to the impedances in the transformer and system, which block the flow of harmonics. In fact, harmonics may need to be expressed at different values, depending on the load. On the other hand, due to system interaction and circuit topology, sometimes the harmonic current values are greater than the ideal values for certain harmonic values. The interaction of devices such as filters and power-factor correction capacitors can have a great affect on the harmonic values. These interactions are not always predictable. This is also one of the problems faced by filter designers. This has increasingly led toward multisecondary transformers that cancel the harmonics at their primary terminals, although the transformer generally still has to deal with the harmonics.

A quick study of Table 5.1 shows that the harmonic currents are greatly reduced as the pulse number increases. Of course, the cost of the rectifiers and transformers increases as the complexity of the design increases. One must determine what level of power quality one can afford or what level is necessary to meet the limits given by IEEE 519.

www.EngineeringEbooksPdf.com

TABLE 5.1 Theoretical Harmonic Currents Present in Input Current to a Typical Static Power Rectifier, per Unit of the Fundamental Current

	Rectifier Pulse Number						
Harmonic Order	6	12	18	24	30	36	48
5	0.2000						
7	0.1429						
11	0.0909	0.0909					
13	0.0769	0.0769					
17	0.0588		0.0588				
19	0.0526		0.0526				
23	0.0435	0.0435		0.0435			
25	0.0400	0.0400		0.0400			
29	0.0345				0.0345		
31	0.0323				0.0323		
35	0.0286	0.0286	0.0286			0.0286	
37	0.0270	0.0270	0.0270			0.0270	
41	0.0244						
43	0.0233						
47	0.0213	0.0213		0.0213			0.0213
49	0.0204	0.0204		0.0204			0.0204

5.7 Harmonic Spectrum

One requirement of ANSI/IEEE C57.18.10 is that the specifying engineer supply the harmonic load spectrum to the transformer manufacturer. There are too many details of circuit operation, system parameters, and other equipment, such as power-factor correction capacitors, for the transformer manufacturer to be able to safely assume a harmonic spectrum with complete confidence. The requirement to specify the harmonic spectrum is of utmost importance. Indeed, the problem of harmonic heating was the primary reason for the creation of ANSI/IEEE C57.18.10, which shows the theoretical harmonic spectrum similar to that presented in Table 5.1, also in theoretical values. The 25th harmonic was used as the cutoff point since the theoretical values were given in the table. Table 5.1 of ANSI/IEEE C57.18.10 provides very conservative values. Consider what would happen if we used the theoretical values of harmonic current and allowed the spectrum to go on and on. The harmonic loss factor from such an exercise would be infinity for any pulse system. A reasonable cutoff point and accurate harmonic spectrum are necessary to properly design transformers for harmonic loads. While it may be prudent to be somewhat conservative, the specifying engineer must recognize the cost of being overly conservative. If the transformer spectrum is underestimated, the transformer may overheat. If the harmonic spectrum is estimated at too high a value, the transformer will be overdesigned, and the user will invest more capital in the transformer than is warranted.

It is also not possible to simply specify the total harmonic distortion (THD) of the current in order to specify the harmonics. Many different harmonic current spectra can give the same THD, but the harmonic loss factor may be different for each of them.

Total percent harmonic distortion, as it relates to current, can be expressed as follows:

$$I_{THD} = \left[\sum_{h=2}^{H} \frac{I_h^2}{I_1^2} \right] \times 100\% \tag{5.7}$$

where

I_h is the current for the hth harmonic, expressed in per-unit terms

I_1 is the fundamental frequency current, expressed in per-unit terms

www.EngineeringEbooksPdf.com

Limits of allowable total harmonic distortion are given in IEEE 519, Recommended Practices and Requirements for Harmonic Control in Electric Power Systems.

Likewise, total harmonic distortion as it relates to voltage can be expressed as follows:

$$V_{THD} = \left[\sum_{h=2}^{H} \frac{V_h^2}{V_1^2} \right] \times 100\% \tag{5.8}$$

where

V_h is the voltage for the hth harmonic, expressed in per-unit terms

V_1 is the fundamental frequency current, expressed in per-unit terms

Again, IEEE 519 also addresses total harmonic distortion and its limits.

Typically, voltage harmonics do not adversely affect a rectifier transformer. Voltage and current harmonics usually do not create a core-heating problem. Rectifier transformers generally are designed with lower core inductions than standard power transformers to help offset the added core induction due to voltage harmonics. However, if there is dc current in the secondary waveform, the core can go into saturation. This results in high vibration, noise, core heating, and circulating currents since the core can no longer hold the flux. Nevertheless, the normal effect of harmonics is a noisier core as it reacts to different load frequencies. If a core in a liquid-filled transformer is overheating from voltage harmonics or dc current saturation, dissolved gas in oil analysis will usually detect elevated levels of hydrogen gases in the fluid.

Assume a harmonic spectrum as shown in Table 5.2.

If we look at the theoretical spectrum shown in Table 5.2 and compare it with an example spectrum in Table 5.3, we can see that the effects of the harmonic currents are quite different. The harmonic loss factor, F_{HL}, is calculated for both the theoretical spectrum and the example spectrum in Table 5.3.

The results in Table 5.3 dramatically show the reality of many harmonic spectra. The winding eddy- and stray-loss multiplier from the example harmonic spectrum is much less than the theoretical value would indicate. This was one of the failings of rating transformers using the UL K-factor and then assigning an arbitrary value based on service. While this approach may be conservative and acceptable in a safety standard, it is not an engineering solution to the problem. The values of F_{HL} earlier demonstrate the need to have a reasonable harmonic spectrum for applications. Many site-specific installations measure and determine their harmonic spectra. For ease of specification, many specifying engineers use a standard spectrum that may not be applicable in all installations. This practice runs the risk of underspecifying or overspecifying the transformer. Underspecifying the harmonic spectrum results in overheated transformers and possible failures. Overspecifying the harmonic spectrum results in overbuilt and more costly capital equipment.

TABLE 5.2 Theoretical Harmonic Spectrum

Harmonic	Harmonic, per Unit Current
1	1.0000
5	0.1750
7	0.1000
11	0.0450
13	0.0290
17	0.0150
19	0.0100
23	0.0090
25	0.0080

www.EngineeringEbooksPdf.com

TABLE 5.3 Comparison of Harmonic Loss Factor for the Theoretical Spectrum and an Example Spectrum

Harmonic	I_h			I_h^2		$I_h^2h^2$	
h	Theoretical	Example	h^2	Theoretical	Example	Theoretical	Example
1	1.0000	1.0000	1	1.0000	1.0000	1.0000	1.0000
5	0.2000	0.1750	25	0.0400	0.3063	1.0000	0.7656
7	0.1429	0.1000	49	0.0204	0.0100	1.0000	0.4900
11	0.0909	0.0450	121	0.0083	0.0020	1.0000	0.2450
13	0.0769	0.0290	169	0.0059	0.0008	1.0000	0.1421
17	0.0588	0.0150	289	0.0035	0.0002	1.0000	0.0650
19	0.0526	0.0100	361	0.0028	0.0001	1.0000	0.0361
23	0.0435	0.0090	529	0.0019	0.0001	1.0000	0.0428
25	0.0400	0.0080	625	0.0016	0.0001	1.0000	0.0400
					$F_{HL} = \Sigma$	9.0000	2.8266

Some newer drive and rectifier topologies generate atypical harmonic spectra. Many are specifically designed to produce much lower harmonics. Some generate skewed harmonic spectra which may produce lower harmonic current levels in the lower harmonics but create much higher than normal harmonics in the upper harmonics. This is a perfect example of why the harmonic spectrum needs to be specified to the transformer manufacturer, not assumed.

5.8 Effects of Harmonic Currents on Transformers

To better understand how harmonic currents affect transformers, one must first understand the basic construction. For power transformers up to about 50 MVA, the typical construction is core form. The low-voltage winding is generally placed next to the core leg, with the high-voltage winding wound concentrically over the low-voltage winding. For some high-current transformers, these windings may be reversed, with the low-voltage winding wound on the outside over the high-voltage coil. The core and coils are held together with core clamps, and the core and coil is generally enclosed by a tank or enclosure. See Figure 5.15 for this construction and a view of leakage field around the transformer. This is from a finite element analysis. These analytical methods are being applied to designs much more routinely with modern design techniques. These help the transformer design engineer determine the areas of highest loss densities and can be used to analyze the effects of each harmonic of concern. This is then used to determine the hottest-spot regions in the windings and to control these hottest-spot winding temperatures.

Losses in the transformer can be broken down into core loss, no-load loss, and load loss. Load losses can be further broken down into I^2R loss and stray loss. Stray loss can be further broken down into eddy-current losses and other stray losses. Electromagnetic fields from the ac currents produce voltages across conductors, causing eddy currents to flow in them. This increases the conductor loss and operating temperature. Other stray losses are due to losses in structures other than the windings, such as core clamps and tank or enclosure walls.

The region of maximum eddy-current losses is the upper region of the winding, near the high-low barrier. The same usually exists at the bottom of the transformer winding as well, but it is typically the upper region that has the most damaging effects, as it is in a higher ambient temperature of liquid or air.

Core-loss components can be broken down into core eddy loss, hysteresis loss, and winding-excitation loss. These losses are a function of the grade of core steel, the lamination thickness, the type of core and joint, the operating frequency, the destruction factor during manufacture, and the core induction. Harmonic currents can create harmonic voltage distortions and somewhat increase the core loss, the exciting current, and sound levels while leading to potential core-saturation problems. However, this is not considered to be the main cause of problems in rectifier transformers. ANSI/IEEE C57.18.10 does

www.EngineeringEbooksPdf.com

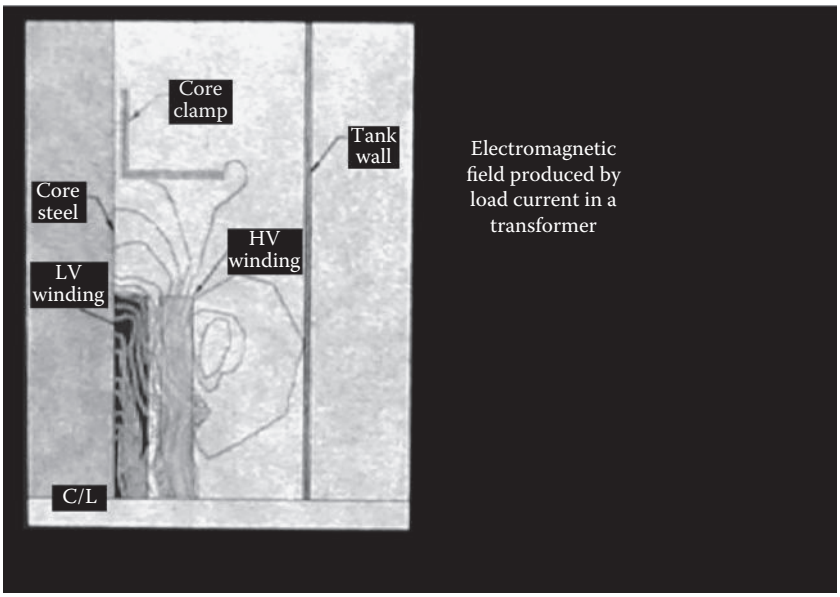

FIGURE 5.15 Transformer construction and electromagnetic leakage field.

not presently calculate any effect on the core loss by the harmonic currents. But an rms summation method similar to what is demonstrated for harmonic currents can be applied to estimate the effect of harmonic voltages on the core of a transformer.

Other stray losses are generally proportional to the current squared times the harmonic frequency order to the 0.8 power, as shown earlier in Equation 5.2. Metallic parts will increase in temperature, and load loss will increase. These losses are generally not detrimental to the life of the transformer as long as the insulating system is not damaged. The metallic parts typically affected are the core clamps, winding clamping structures, and tank or enclosure walls. The use of nonmagnetic materials, magnetic shields, conductive shields, increased magnetic clearances, and interleaving of high-current buswork are useful methods in reducing the stray losses that are amplified by the harmonic currents.

Eddy-current losses in the windings are affected mostly by harmonic currents. The eddy-current loss is proportional to the square of the load current and the square of the harmonic frequency, as shown earlier in Equation 5.1. These losses are increased in the hottest-spot area of the winding and can lead to early insulation failure. The transformer designer must make efforts to reduce the winding eddy-current losses due to the harmonic amplification of these losses. Careful winding and impedance balances, dimensioning of the conductors, and transposition of the conductors are useful methods in this effort.

I^2R losses increase as the rms current of the transformer increases. A transformer with a higher harmonic spectrum will draw more current from the system.

To see the results on the losses of the transformer, consider the following example for a 5000 kVA rectifier transformer with the harmonic spectrum shown in Table 5.4. From the design or test losses, we can determine how many watts will be generated by each loss component and what needs to be cooled. For this example, we will assume that the transformer has the following loss data:

Core loss = 9,000 W
I^2R loss = 30,000 W
Winding eddy-current loss = 6,000 W
Bus loss = 1,000 W
Other stray loss = 4,000 W
Total sinusoidal loss = 50,000 W

www.EngineeringEbooksPdf.com

TABLE 5.4 Example of a Harmonic Spectrum for the Example Problem

Harmonic Order	Per Unit Load Current
1	1.000
5	0.180
7	0.120
11	0.066
13	0.055
17	0.029
19	0.019
23	0.009
25	0.005

TABLE 5.5 Calculated Harmonic Loss Factors

Harmonic Order (h)	Fundamental, p.u. A	Fundamental, p.u. A^2	h^2	$h^{0.8}$	F_{HL_WE}	$F_{HL\text{-}OSL}$ and Bus Loss
1	1.000	1.000000	1	1.0000	1.0000	1.0000
5	0.180	0.032400	25	3.6238	0.8100	0.1174
7	0.120	0.014400	49	4.7433	0.7056	0.0683
11	0.066	0.004356	121	6.8095	0.5271	0.0297
13	0.055	0.003025	169	7.7831	0.5112	0.0235
17	0.029	0.000841	289	9.6463	0.2430	0.0081
19	0.019	0.000361	361	10.5439	0.1303	0.0038
23	0.009	0.000081	529	12.2852	0.0428	0.0010
25	0.005	0.000025	625	13.1326	0.156	0.0003
Σ		1.055489			3.9856	1.2521

We can determine the harmonic loss factors in Table 5.5:

$$\text{rms p.u. current} = \sqrt{1.055489} = 1.02737 \tag{5.9}$$

From the results of the calculations in Table 5.5, we can now calculate the service losses under harmonic load conditions as follows:

1. Core loss remains unchanged from the fundamental kVA, per ANSI/IEEE C57.18.10.
2. The rms kVA would be 1.02737 times the fundamental kVA.
3. The fundamental I^2R losses would be increased by 1.055.
4. Multiply the fundamental winding eddy-current losses by 3.9856.
5. Multiply the fundamental other stray losses and bus-bar eddy-current losses by 1.2521.

The results of these calculations are shown in Table 5.6. The losses to be considered for thermal dimensioning would be the service losses, not the fundamental losses of Table 5.4. When the temperature-rise test is performed, it must be done with the calculated service losses per ANSI/IEEE C57.18.10. These calculated service losses should be a conservative estimate of the actual losses. Actual losses will probably be slightly less.

www.EngineeringEbooksPdf.com

TABLE 5.6 Calculated Service Losses

	Fundamental Losses (W)	F_{HL} Multiplier	Service Losses (W)
Core loss	9,000	1.0000	9,000
I^2R loss	30,000	1.0555	31,655
Winding eddy-current loss	6,000	3.9856	22,914
Bus loss	1,000	1.2521	1,252
Other stray loss	4,000	1.2521	5,008
Total losses	50,000		69,829

These calculated service losses would require significantly more radiators for a liquid-filled unit or the winding ducts for a dry-type or cast-coil transformer than the fundamental losses would indicate. More detailed examples of these types of loss calculations are given in the Annex of ANSI/IEEE C57.18.10.

5.9 Thermal Tests

The losses calculated by using the harmonic loss factors are used when the thermal tests are performed. The thermal tests are performed per ANSI/IEEE C57.18.10. The methods are similar to ANSI/IEEE C57.12.90 and ANSI/IEEE C57.12.91, except instead of the fundamental or rms current, the current must be sufficient to produce the losses with harmonics considered.

In the case of liquid-filled transformers, sufficient current is applied to the transformer to obtain the calculated service losses with harmonics. Once the top-oil temperature is obtained, the core loss is backed out. The rated-current portion of the test is performed with current sufficient to produce the load losses with harmonics included.

In the case of dry-type transformers, the core-loss portion of the test is the same as a standard transformer. When the load portion of the test is preformed, the rated-current portion of the test is performed with current sufficient to produce the load losses with the harmonics included.

Once the thermal tests are completed, there are possibly some adjustments necessary to the calculated temperature rise. This is especially true in the case of multiple-secondary-winding transformers. If the harmonic loss factor for the secondary winding is different from the primary winding, the secondary-winding rise may need to be adjusted upward based on the losses it should have had. The primary-winding rise is then adjusted downward.

Temperature-rise tests of single-way transformers, such as ANSI Circuit 45 (Figure 5.5), are at best a compromise, unless the rectifier is available. Standard short-circuit tests used to thermally test the transformer will not even energize the interphase portions of the transformer. Either the primary windings or the secondary windings will be either greatly overloaded or underloaded. Care must be taken not to damage the transformer during the thermal tests. For instance, attempts to circulate currents in both secondary windings may cause the primary winding to be overloaded.

This is a significant change from the mercury-arc rectifier transformer standard, ANSI/IEEE C57.18. That standard did not require the use of calculated harmonic losses in the thermal test. Transformers were tested with the normal fundamental sinusoidal losses and were cooled to a fixed number of degrees below the normal temperature rise, based on the service class and type of transformer. These were shown in Table 8 (limits of temperature rise) of that standard.

With the advent of electronic power supplies in transformer factory test areas, work is now progressing toward being able to apply the actual harmonic currents during the thermal tests. This has not been perfected and is limited to the harmonics that the electronic power supplies have available. So they are generally limited to 1000 Hz or less today. So in general, this means the fundamental current and the 5th, 7th, 11th, and 13th harmonics might be tested for 60 Hz designs (or up to the 17th and 19th harmonics for 50 Hz designs), but higher harmonics may be beyond the electronic power supply's capabilities.

www.EngineeringEbooksPdf.com

5.10 Harmonic Cancellation

Some harmonics can be canceled, depending on how the windings are constructed or on the transformer circuit selected. Cancellation considerations are vital to the proper design and cooling of the transformer windings.

If the secondary windings are interleaved, the harmonic currents still exist for the converter pulse of the secondary, but the effects of the harmonics are reduced to the next pulse converter level. This is true of secondary windings constructed like Figure 5.12d and e of Circuit 31 (Figure 5.4), Circuit 45 (Figure 5.5), or Circuit 46 (Figure 5.6) secondary windings and the like. Circuit 45 and 46 secondary windings will still carry three-pulse harmonics, but the harmonic loss factor affecting the secondary-winding eddy-current losses is reduced to that of a six-pulse transformer. For a Circuit 31 transformer with 6-pulse secondary windings, it will still carry 6-pulse secondary harmonic currents, but the secondary-winding eddy-current losses will only be affected by 12-pulse harmonics.

If primary windings are made of paralleled sections, they have the same harmonic currents and harmonic loss effects as their opposing secondary windings. This is the case for Figure 5.12a, a popular Circuit 31 transformer. All windings of this figure have six-pulse harmonics in the winding currents and the effect of the harmonics on the secondary-winding eddy-current losses. At the primary terminals of the transformer, the unit will have 12-pulse harmonics. For the user, this is the important feature. The winding construction is usually the choice of the transformer manufacturer. However, some specifying engineers will request particular constructions in order to achieve their desired system characteristics.

All of the harmonic cancellations discussed so far have used simple delta and wye windings in order to achieve them. Additional phase shifts are used to achieve higher pulse orders. This is accomplished by using extended delta windings, zigzag wye windings, and polygon windings. These are shown in Figures 5.16 through 5.18. The windings are extended to the required amount to produce the degree of shift desired. These are usually done at 7.5°, 10°, 15°, and 20°, although more increments are possible in order to achieve the desired converter pulse.

The type of winding combinations required for the converter pulse desired can be quite comprehensive. A table of typical winding shifts is shown in Table 5.7, but other combinations are acceptable. The table shows the required number of secondary windings needed with a single-primary-winding transformer. This is usually used with higher-voltage, low-current secondary windings. It can also be used as the required number of primary-winding shifts and transformers, when the transformers have the same single-secondary-winding phase relationship. This is usually used with high-current secondary windings.

Using different phase shifts on the single winding of the transformer, whether the primary or secondary winding, can increase the number of phase shifts. For instance, two 12-pulse transformers can make a 24-pulse system by using a delta primary on one transformer and a wye primary on the other.

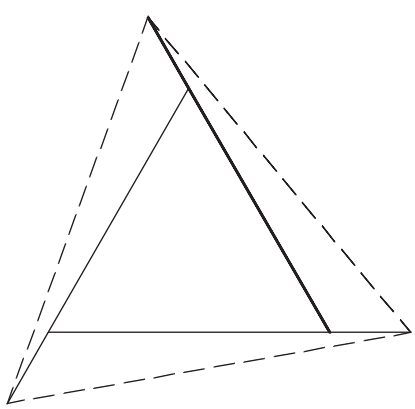

FIGURE 5.16 Extended delta-winding shift.

www.EngineeringEbooksPdf.com

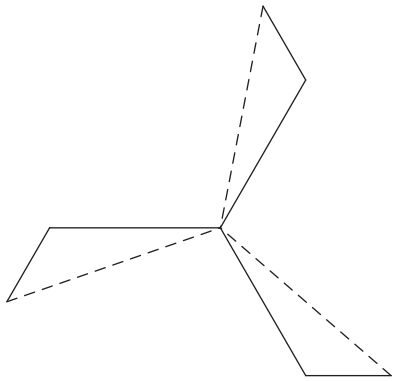

FIGURE 5.17 Zigzag wye-winding shift.

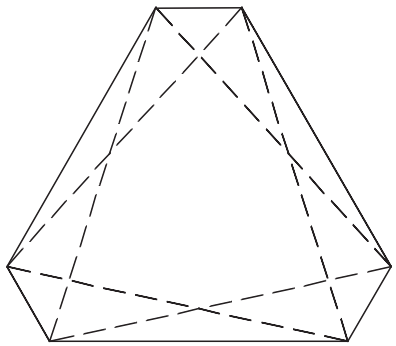

FIGURE 5.18 Polygon winding shift.

TABLE 5.7 Required Number of Six-Pulse Windings and Connections

Pulse Number	Number of Six-Pulse Windings and Typical Connections							
	1	2	3	4	5	6	7	8
6	Delta or wye	—	—	—	—	—	—	—
12	Delta	Wye	—	—	—	—	—	—
18	Delta	Wye −10°	Wye +10°	—	—	—	—	—
18	Delta +10°	Delta −10°	Wye	—	—	—	—	—
18	Delta +20°	Delta	Delta −20°	—	—	—	—	—
24	Delta +15°	Delta	Delta −15°	Wye	—	—	—	—
24	Delta	Wye +15°	Wye	Wye −15°	—	—	—	—
24	Delta +7.5°	Delta −7.5°	Wye +7.5°	Wye −7.5°	—	—	—	—
30	Delta +12°	Delta	Delta −12°	Wye +6°	Wye −6°	—	—	—
36	Delta +10°	Delta	Delta −10°	Wye +10°	Wye −10°	Wye	—	—
48	Delta +15°	Delta +7.5°	Delta	Delta −7.5°	Delta −15°	Wye −7.5°	Wye	Wye +7.5°

In cases where it may be desirable to have an interchangeable spare, it is sometimes beneficial to use two 15° phase-shifted primary windings. The spare transformer can then be made with a reconnectable winding for ±15° shift.

It is important to note that harmonic cancellation is generally not perfect. This is due to several factors, such as unbalanced loading, inaccurate phase shifts, differences in commutating impedances,

www.EngineeringEbooksPdf.com

and tap changes. That may be acceptable at some times but not at others. It is common to assume a 5% residual of lower harmonics to accommodate these realities.

When the phase shift is incorporated in the primary winding, the degree of shift will vary somewhat as taps are changed on the transformer unless a tap changer is used in the main part of the shifted winding and the extended part of the shifted winding. Even then, there may be a slight shift. These problems may vary by about a degree of shift over the tap range of most transformers (Figures 5.19 through 5.23).

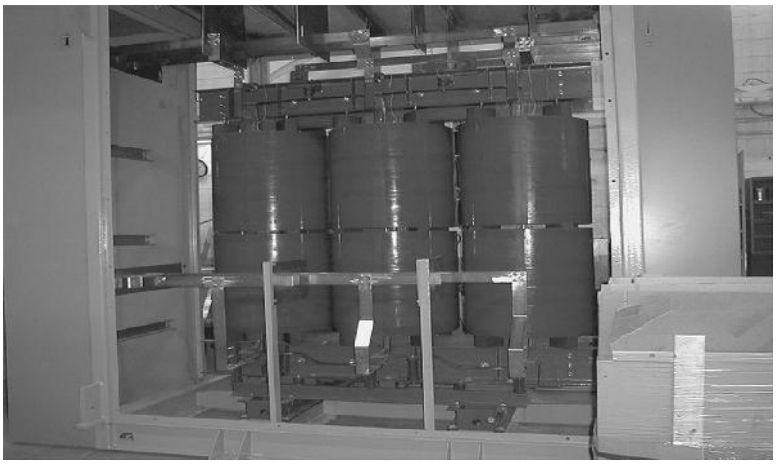

FIGURE 5.19 A 12-pulse circuit 31 5450 kVA, 4160 V delta primary to 2080 V delta and wye secondaries, cast-coil transformer in case. (Photo courtesy of Niagara Transformer Corp., Buffalo, NY.)

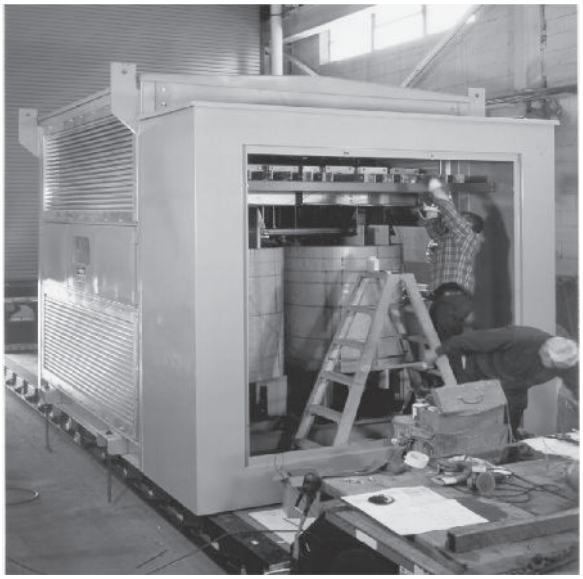

FIGURE 5.20 A 24-pulse dry-type transformer. 7000 kVA drive duty transformer, to be located in a tunnel, made of two 3500 kVA 12-pulse transformers. Each core and coil has 1100 V delta and wye secondary windings. Each core and coil has a 13,200 V extended delta primary winding. One core and coil has its primary winding shifted –15°, while the other core and coil has its primary winding shifted +15°. One reconnectable primary spare core and coil can be used to replace either core and coil assembly. (Photo courtesy of Niagara Transformer Corp., Buffalo, NY.)

www.EngineeringEbooksPdf.com

FIGURE 5.21 A 36-pulse system made up of 12 transformers with six types of 6-pulse transformers for high-current electrochemical rectifier duty. Each transformer is 11,816 kVA OFWF with 426 V delta secondary windings. Each transformer has a 34,500 V primary with the shifts shown in Table 5.7 for a 36-pulse system. (Photo courtesy of Niagara Transformer Corp., Buffalo, NY.)

FIGURE 5.22 A 5000 kVA 18-pulse transformer ready for shipment. Motor drive duty, 13,800 V delta primary to secondaries of 1,400 V delta, 1,400 V delta +20°, and 1,400 V delta −20°. (Photo courtesy of Niagara Transformer Corp., Buffalo, NY.)

5.11 DC Current Content

If dc current is present in either the supply side or the load side of the transformer windings, it must be specified to the transformer manufacturer at the time of quotation. Some rectifier circuits, such as cycloconverters, have the possibility of dc current in the load current. A small amount of dc current can saturate the core of a transformer. The effects of this may be core and core-joint overheating, core-clamp heating from fields and circulating currents, winding hot spots, and even tank heating. Noise and vibration are also often present. In liquid-filled transformers, elevated combustible gases may evolve, especially hydrogen. In dry-type transformers, blackening of the core varnish or paint and even smoke may be observed.

www.EngineeringEbooksPdf.com

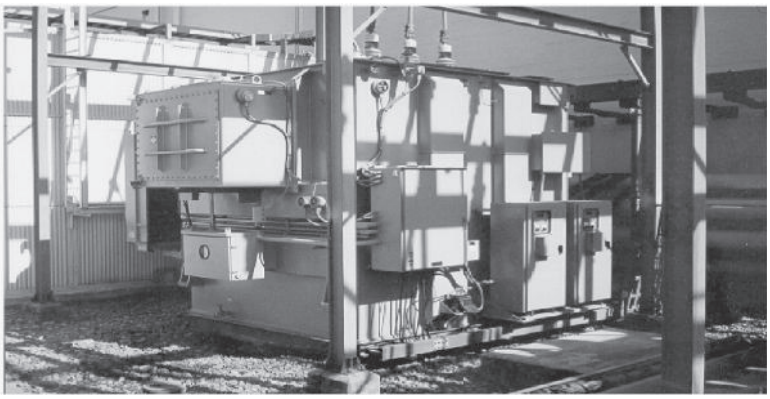

FIGURE 5.23 A 37,500 kVA OFAF regulating autotransformer with load tap changer (LTC) and saturable core reactors and dc power supplies. The high voltage is dual voltage for 13,800 V wye and 23,000 V wye. The LTC and saturable-core reactors permit the secondary voltage to range from 14,850 V wye down to 7,150 V wye. The LTC makes coarse taps, while the saturable-core reactors provide infinite variability between taps. This transformer powers downstream to an electrochemical service diode rectifier. The transformer weighs over 170,000 lb, as it includes the main transformer, a series transformer, a preventive autotransformer, and saturable-core reactors. The dc power supplies provide control to the saturable-core reactors. (Photo courtesy of Niagara Transformer Corp., Buffalo, NY.)

A dc current may be introduced into a transformer due to unbalances in the rectifier system or due to a fault on the rectifier. Typically the expected unbalance is specified to the transformer manufacturer. But unbalances beyond this or a fault on one bridge in the rectifier circuit may introduce higher levels of dc current producing the effects mentioned earlier, as well as possible transformer failure. These are especially true of single-way rectifier transformers.

5.12 Transformers Energized from a Converter/Inverter

Transformers energized from a converter/inverter are often subject to considerably distorted voltages. If voltage harmonics are known to be above the limits of IEEE 519, they must be specified. Variable-frequency applications are generally considered to be at constant volts per hertz. If the volt-per-hertz ratio is variable, the degree of variation must be specified. The flux density of the core is the governing factor, not the maximum value of the sinusoidal voltage.

5.13 Electrostatic Ground Shield

It is usually desirable to have an electrostatic ground shield between the primary and secondary windings, especially as the difference in primary winding voltage and secondary winding voltage becomes greater. The electrostatic ground shield provides capacitive decoupling of the primary and secondary windings. Generally, the winding connected to the rectifier circuit is ungrounded. Without the presence of the electrostatic ground shield, transients on the primary side transfer to the secondary side of the transformer. These may be approximately 50% of the magnitude of the primary transient if there are no grounds in the system. This is high enough to fail secondary windings and core insulation or to cause rectifier-circuit failures. The other normally considered advantage to the system is the minimization of high-frequency disturbances to the primary system due to the rectifier.

Care must be taken in the design of the electrostatic ground shield. If improperly designed, severe eddy-current heating can occur in the ground shield. Also, consideration must be given to the dielectric stresses to the ground shield.

www.EngineeringEbooksPdf.com

5.14 Load Conditions

Load conditions generally are categorized by the service to which the transformer will be subjected. ANSI/IEEE C57.18.10 gives the limits of rectifier transformer winding temperatures for defined load cycles. These limits are the hottest-spot temperature limits of the applicable insulation systems. These are the same limits that one may have with a standard power transformer that is not subject to loads rich in harmonics. However, the harmonic losses are to be included in the calculation and test values used to determine thermal capability for rectifier transformers. The standard service rating classes are as follows:

1. Electrochemical service
2. Industrial service
3. Light traction or mining service
4. Heavy traction service
5. Extra-heavy traction service
6. User-defined service

User-defined service is a catchall for load patterns not defined in items 1 through 5.

It should be noted that some of these load conditions are quite severe. For instance, the overloads for many mill drive rectifier transformers are over 200% while metals are rolled to the required gauge. Another example is for traction rectifier transformers that are subject to severe overloads while trains start and run heavy commuter loads, up to 450% overload for extra-heavy traction service.

5.15 Interphase Transformers

Interphase transformers help to combine multiple rectifier outputs. They may be external or internal to the rectifier transformer. The interphase transformer supports ac voltage differences between the rectifier outputs. They cannot balance steady-state differences in dc voltage, since they only provide support to ac voltage differences. The interphase-transformer windings carry both ac and dc currents. The windings are in opposition so as to allow dc current to flow, but this causes opposing ampere-turns on the core. The core usually has to be gapped for the expected dc current unbalances and to be able to support the expected magnetizing current from the ripple voltage. Excellent sources on this are Schaefer (1965) and Paice (1996, 2001) listed in the references.

5.16 Rectifier Transformer Dielectric Stresses

There are many dielectric stresses that are pertinent to rectifier transformers. A few deserve special attention.

Usually the winding connected to the rectifier or converter is designed to a higher BIL level than a standard transformer. These BIL requirements are in ANSI/IEEE C57.18.10. The windings are subject to common mode potentials due to the rectifier or drive attached to them. This produces higher voltage stresses to ground. This is the reason for higher BIL requirements.

The windings connected to the rectifier or converter usually aren't subject to line transients, though. In fact, ANSI/IEEE C57.18.10 does not presently require these windings to be impulse tested. Another reason for this is that the windings usually cannot be properly tested when they are low-voltage windings. It is usually impossible to get the exact waveforms required by test standards.

Although not always the case, rectifier transformers may be switched on and off frequently from the power system. Since modern switching devices have higher speed than years ago, this may produce a resonant frequency failure within the windings of the rectifier transformer if not properly protected. If needed, the usual protection scheme is to use a snubber circuit and surge arresters for protection.

www.EngineeringEbooksPdf.com

Lastly, some newer drive systems employ very fast switching devices. The high-frequency switching produces higher dielectric stresses than normal power frequencies. These may also produce a resonant failure within a rectifier transformer winding due to the high-frequency switching.

5.17 Short-Circuit Problems Associated with Rectifier Transformers

Rectifier transformers may have unusual short-circuit failures when compared to power transformers. Multiple secondary windings present peculiar problems during short circuits. When all of the secondary windings are short-circuited, short-circuit forces and performance are more predictable and comparable to a power transformer. But, when only one secondary experiences short-circuit conditions, the forces can become very unbalanced often creating severe axial forces, as multiple secondary windings are usually oriented axially. These forces may not be contained, especially if the protection doesn't detect the fault quickly enough, causing a failure. Fast, sensitive circuit protection is needed to help prevent these occurrences.

Sometimes these failures don't occur from the short-circuit forces, but result in a thermal failure due to the length of time for the fault. This happens when the transformer design may successfully withstand the mechanical short-circuit forces, but the fault current causes a thermal failure of the insulation system because the protection scheme doesn't detect the fault. This can happen when only primary protection is used. A fault on one secondary when there are multiple secondary windings may not appear as a fault on the primary side since it is only a fraction of what the primary protection design expects during a fault.

Many rectifier transformer applications experience repetitive faults that are far more than expected with power transformers. Traction rectifier transformers are an example of this. We have already mentioned how they experience severe overloads in normal operation. The tracks and lines that comprise the secondary systems are easily exposed to faults. Traction rectifier transformers may experience as many as 250 short circuits per year, or more. The expected number of short circuits per year is often expressed in the transformer specification. Due to the severity of the number of faults, it is quite common to see traction rectifier transformer specifications require the performance of short-circuit tests on the first transformer of a design.

References

Paice, D.A., *Power Electronic Converter Harmonics: Multiphase Methods for Clean Power*, IEEE Press, New York, 1996.

Paice, D.A., *Power Electronic Converter Design and Application, Multipulse Methods and Engineering Issues*, Paice and Associates, Palm Harbor, FL, 2001.

Schaefer, J., *Rectifier Circuits: Theory and Design*, John Wiley & Sons, New York, 1965.

Bibliography

ANSI/IEEE, *Pool Cathode Mercury-Arc Rectifier Transformer*, ANSI/IEEE C57.18-1964, Institute of Electrical and Electronics Engineers, Piscataway, NJ, 1964.

Blume, L.F. et al., *Transformer Engineering*, 2nd edn., John Wiley & Sons, New York, 1951.

Crepaz, S., Eddy current losses in rectifier transformers, *IEEE Trans. Power Appar. Syst.*, PAS-89, 1651, 1970.

Dwight, H.B., *Electrical Coils and Conductors*, McGraw-Hill, New York, 1945.

Forrest, J.A.C., Harmonic load losses in HVDC converter transformers, *IEEE Trans. Power Delivery*, 6(1), 153–157, 1991.

www.EngineeringEbooksPdf.com

General Electric, *Power Converter Handbook*, Canadian General Electric Co., Peterborough, Ontario, Canada, 1976.

IEC, Convertor transformers—Part 1: Transformers for industrial applications, IEC 61378-1-1997, International Electrotechnical Commission, Geneva, Switzerland, 1997.

IEEE, *Standard Practices and Requirements for Semiconductor Power Rectifiers*, ANSI/IEEE C34.2-1968, Institute of Electrical and Electronics Engineers, Piscataway, NJ, 1968.

IEEE, *Guide for Harmonic Control and Reactive Compensation of Static Power Converters*, IEEE Std. 519–1992, Institute of Electrical and Electronics Engineers, Piscataway, NJ, 1992.

IEEE, *Standard Test Code for Dry-Type Distribution and Power Transformers*, ANSI/IEEE C57.12.91-1996, Institute of Electrical and Electronics Engineers, Piscataway, NJ, 1996.

IEEE, *Standard Test Code for Liquid-Immersed Distribution, Power, and Regulating Transformers*, ANSI/IEEE C57.12.90-2007, Institute of Electrical and Electronics Engineers, Piscataway, NJ, 2007.

IEEE, *Recommended Practice for Establishing Transformer Capability when Supplying Non-Sinusoidal Load Currents*, IEEE C57.110-2008, Institute of Electrical and Electronics Engineers, Piscataway, NJ, 2008.

IEEE, *Standard Practices and Requirements for Semiconductor Power Rectifier Transformers*, IEEE C57.18.10-1998, R2008, Institute of Electrical and Electronics Engineers, Piscataway, NJ, 2008.

Kennedy, S.P., Design and application of semiconductor rectifier transformers, *IEEE Trans. Ind. Appl.*, 38(4), 927–933, 2002.

Kennedy, S.P. and Ivey, C.L., Application, design and rating of transformers containing harmonic currents, Presented at *1990 Annual Pulp and Paper Technical Conference*, Seattle, WA, pp. 19–31, 1990.

Kline, A.D., Transformers in SCR converter circuits, Conference Record of the Industry Applications Society, IEEE, *1981 Annual Meeting*, New York, pp. 456–458, 1981.

MIT Electrical Engineering Staff, *Magnetic Circuits and Transformers*, John Wiley & Sons, New York, 1949.

Ram, B.S. et al., Effects of harmonics on converter transformer load losses, *IEEE Trans. Power Delivery*, 3(3), 1059, 1988.

UL, *Dry-Type General Purpose and Power Transformers*, UL 1561, Underwriters' Laboratories, Northbrook, IL, 1999.

www.EngineeringEbooksPdf.com

www.EngineeringEbooksPdf.com

6

Dry-Type Transformers

6.1 History **6**-1
6.2 Transformer Taps **6**-2
6.3 Cooling Classes for Dry-Type Transformers **6**-2
6.4 Winding Insulation System **6**-3
6.5 Application **6**-3
6.6 Enclosures **6**-4
6.7 Operating Conditions **6**-5
6.8 Limits of Temperature Rise **6**-6
6.9 Transformer Loading **6**-7
6.10 Accessories **6**-8
6.11 Fault Protection **6**-8
6.12 Surge Protection **6**-8
6.13 Harmonics **6**-9
6.14 Dry-Type Transformer Maintenance **6**-9
References **6**-10

Charles W. Johnson Jr.
ABB, Inc.

A dry-type transformer is one in which the insulating medium surrounding the winding assembly is a gas or dry compound. Basically, any transformer can be constructed as "dry" as long as the ratings, most especially the voltage and kVA, can be accommodated without the use of insulating oil or other liquid media. This section covers single- and three-phase, ventilated, nonventilated, and sealed dry-type transformers with voltage in excess of 600 V in the highest-voltage winding.

Many perceptions of dry-type transformers are associated with the class of design by virtue of the range of ratings or end-use applications commonly associated with that form of construction. Of course, the fundamental principles are no different from those encountered in liquid-immersed designs, as discussed in other chapters. Considerations involving harmonics are especially notable in this regard. Consequently, this chapter is brief, expounding only on those topics that are particularly relevant for a transformer because it is dry.

Dry-type transformers when compared with oil-immersed transformers are lighter and nonflammable but may be larger in dimensions. Increased experience with thermal behavior of materials, continued development of materials, and transformer design has improved transformer thermal capability. Upper limits of voltage and kVA have increased. Winding insulation materials have advanced from protection against moisture to protection under more adverse conditions (e.g., abrasive dust and corrosive environments).

6.1 History

The history of dry-type transformers can be traced to demonstration of the principle of electromagnetic induction and development of ac lighting systems. In 1831, Michael Faraday demonstrated induction of current in a secondary coil by the electromagnetic effect of current in the primary coil. Sir William

www.EngineeringEbooksPdf.com

Grove was the first to connect a transformer to an ac source needing high-voltage power for his laboratory work, but its significance as a commercial application was not realized.

In 1882, Lucien Gaulard and John Dixon Gibbs were granted a patent for a secondary generator placed in series to supply an ac arc lamp lighting system. The system demonstrated in England in 1883 and Turin, Italy, in 1884 was not practical, but stimulated transformer development in several countries [1].

Miksa Deri, Otto Blathy, and Karoly Zipernowski after seeing the lighting demonstration in Italy made improvements and built transformers for parallel connection to a generator. Unlike the secondary generator that had an open iron core, Deri, Blathy, and Zipernowski developed a transformer with a closed iron core. In 1885, the lighting system was demonstrated at the Industrial Exhibition in Budapest. Although manufacturing was expensive, the transformer functioned efficiently—low voltage drop and low loss [2]. Similarly for England's lighting system, Sebastian Ziani de Ferranti made improvements to the transformer.

George Westinghouse, also impressed by the Gaulard and Gibbs lighting-system demonstration in Italy, was encouraged by William Stanley to purchase the Gaulard and Gibbs transformer patents. In 1885, Stanley designed closed-core transformers subsequently modified by Oliver Shallenberger and Albert Schmid making manufacturing of transformers easier and inexpensive, defining the basic principles for transformer design. In 1886, Westinghouse and Stanley installed the first multivoltage ac lighting system in North America. Driven by a 500 V generator, the transformer stepped up voltage to 3000 V and stepped down to 100 V to supply electric lights in Great Barrington, Massachusetts [1].

6.2 Transformer Taps

Transformers may be furnished with voltage taps in the high-voltage winding or, when specified, in the low-voltage winding. Typically two taps above and two taps below the rated voltage are specified with an increment of 2.5% of the rated voltage for each tap, yielding a 10% total tap-voltage range [3,4]. Typically dry transformer taps are for off-load operation, but dry-type on-load tap changers may be specified.

6.3 Cooling Classes for Dry-Type Transformers

American and European cooling-class designations are indicated in Table 6.1. Cooling classes for dry-type transformers are as follows [5,6]:

Ventilated—Ambient air may circulate, cooling the transformer core and windings.
Nonventilated—No intentional circulation of external air through the transformer.
Sealed—Self-cooled transformer with hermetically sealed tank.
Self-cooled—Cooled by natural circulation of air.
Forced-air cooled—Cooled by forced circulation of air.
Self-cooled/forced-air cooled—A rating with cooling by natural circulation of air and a rating with cooling by forced circulation of air.

TABLE 6.1 Cooling-Class Designation

Cooling Class	IEEE Designation [7]	IEC Designation [8]
Ventilated self-cooled	AA	AN
Ventilated forced-air cooled	AFA	AF
Ventilated self-cooled/forced-air cooled	AA/FA	ANAF
Nonventilated self-cooled	ANV	ANAN
Sealed self-cooled	GA	GNAN

www.EngineeringEbooksPdf.com

FIGURE 6.1 A cast-resin encapsulated high-voltage (15 kV) coil for a 1500 kVA transformer. (Photo courtesy of ABB Inc., Raleigh, NC.)

6.4 Winding Insulation System

General practice is to seal or coat dry-type transformer windings with resin or varnish to provide protection against adverse environmental conditions that can cause degradation of transformer windings. Insulating media for primary and secondary windings are categorized as follows:

Cast coil—The winding is reinforced or placed in a mold and cast in a resin under vacuum pressure. Lower sound levels are realized as the winding is encased in solid insulation. Filling the winding with resin under vacuum pressure eliminates voids that can cause corona. With a solid insulation system, the winding has superior mechanical and short-circuit strength and is impervious to moisture and contaminants.

Vacuum-pressure encapsulated—The winding is embedded in a resin under vacuum pressure. Encapsulating the winding with resin under vacuum pressure eliminates voids that can cause corona. The winding has excellent mechanical and short-circuit strength and provides protection against moisture and contaminants.

Vacuum-pressure impregnated—The winding is permeated in a varnish under vacuum pressure. An impregnated winding provides protection against moisture and contaminants.

Coated—The winding is dipped in a varnish or resin. A coated winding provides some protection against moisture and contaminants for application in moderate environments.

Two photographs of dry-type transformer assemblies are shown in Figures 6.1 and 6.2.

6.5 Application

Nonventilated and sealed dry-type transformers are suitable for indoor and outdoor applications [6]. As the winding is not in contact with the external air, it is suitable for applications, for example, exposure to fumes, vapors, dust, steam, salt spray, moisture, dripping water, rain, and snow.

Ventilated dry-type transformers are recommended only for dry environments unless designed with additional environmental protection. External air-carrying contaminants or excessive moisture could degrade winding insulation. Dust and dirt accumulation can reduce air circulation through the windings [6]. Table 6.2 indicates transformer applications based on the process employed to protect the winding insulation system from environmental conditions.

www.EngineeringEbooksPdf.com

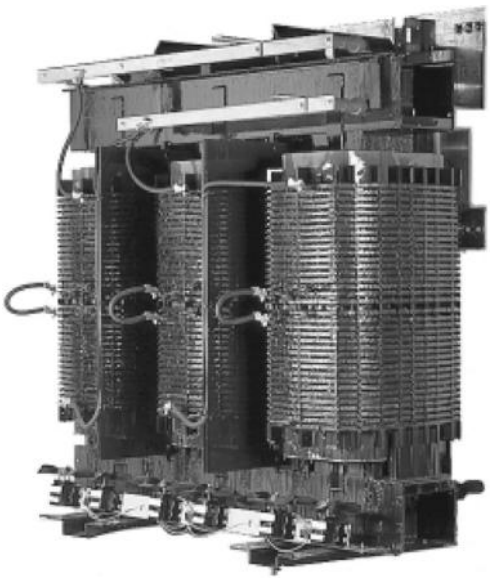

FIGURE 6.2 Three-phase 1500 kVA dry-type transformer, 15 kV class primary and 600 V secondary. Three cooling fans can be seen on the base, below the coils. (Photo courtesy of ABB Inc., Raleigh, NC.)

TABLE 6.2 Transformer Applications

Winding Insulation System	Cast Coil	Encapsulated	Impregnated or Coated	Sealed Gas
Harsh environments[a]	Yes	Yes	Yes	Yes
Severe climates[b]	Yes	Yes		Yes
Load cycling	Yes	Yes	Yes	Yes
Short circuit	Yes	Yes	Yes	Yes
Nonflammability	Yes	Yes	Yes	Yes
Outdoor	Yes	Yes	Yes[c]	Yes
Indoor	Yes	Yes	Yes	Yes

[a] Fumes, vapors, excessive or abrasive dust, steam, salt spray, moisture, or dripping water.
[b] Extreme heat or cold moisture.
[c] If designed for installation in dry environments.

Before energizing the transformer, check operation of fans, motors, relays, and other auxiliary devices; verify transformer tap and ratio connections; and check tightness and clearance of electrical connections. For a sealed transformer, also verify integrity of tank pressure and pressure gauge. Testing prior to placing in service generally includes winding insulation resistance and ratio test; other tests such as winding resistance, polarity and phase relation, and winding insulation power factor may also be performed.

6.6 Enclosures

All energized parts should be enclosed to prevent contact. Ventilated openings should be covered with baffles, grills, or barriers to prevent entry of water, rain, snow, etc. The enclosure should be tamper resistant. A means for effective grounding should be provided [9]. The enclosure should provide protection suitable for the application, for example, a weather- and corrosion-resistant enclosure for outdoor installations.

www.EngineeringEbooksPdf.com

If not designed to be moisture resistant, ventilated and nonventilated dry-type transformers operating in a high-moisture or high-humidity environments when de-energized should be kept dry to prevent moisture ingress. Strip heaters can be installed to switch on the transformer manually or automatically when the transformer is de-energized after shutdown, for maintaining temperature to a few degrees above ambient temperature.

6.7 Operating Conditions

The specifier should inform the manufacturer of any unusual conditions to which the transformer will be subjected. Dry-type transformers are designed for application under the usual operating conditions indicated in Table 6.3.

Unusual operating conditions such as frequent short-time thermal overloading and operating voltage in excess of rating should be specified to facilitate the manufacturer providing a transformer that meets the requirements for performance. Frequent short-duration loading subjects the transformer winding assembly to severe mechanical stress. Operating at excessive voltage can cause overexcitation; transformer core saturation and excessive stray losses can result in thermal overloading and high audible sound levels.

When subjected to operation at high altitudes, dry transformer performance may be impacted both thermally and dielectrically. At lower air densities associated with higher altitudes, the cooling capacity of air can be significantly reduced. Table 6.4 provides kVA derating factors for higher altitudes. The dielectric strength of the air is also reduced, impacting the dielectric withstand of the transformer. Table 6.5 provides the dielectric strength correction factors for higher altitudes.

TABLE 6.3 Usual Operating Conditions for Transformers

Temperature of cooling air	≤40°C
24 h Average temperature of cooling air	≤30°C
Minimum ambient temperature	≥−30°C
Load current[a]	Harmonic factor ≤0.05 per unit
Altitude[b]	≤3300 ft (1000 m)
Voltage[c] (without exceeding limiting temperature rise)	Rated output kVA at 105% rated secondary voltage, power factor ≥0.80
	110% rated secondary voltage at no load

Source: IEEE C57.12.01-2005 (R-2005), *IEEE Standard General Requirements for Dry-Type Distribution and Power Transformers Including Those with Solid Cast and/or Resin-Encapsulated Windings*.

[a] Any unusual load duty should be specified to the manufacturer.

[b] At higher altitudes, the reduced air density decreases dielectric strength; it also increases temperature rise, reducing capability to dissipate heat losses [7].

[c] Operating voltage in excess of rating may cause core saturation and excessive stray losses, which could result in overheating and excessive noise levels [6,7].

TABLE 6.4 Rated kVA Derating Factors for Altitudes Greater Than 1000 m (3300 ft) at 30°C Average Ambient Temperature

Type of Transformer	Types of Cooling	Derating Factor (%)[a]
Dry-type, self-cooled	AA	0.3
Dry-type, forced-air cooled	AA/FA and AFA	0.5

Source: IEEE Standard C57.96-1999 (R-2005), *IEEE Guide for Loading Dry-Type Distribution and Power Transformers*.

[a] For each 100 m (330 ft).

www.EngineeringEbooksPdf.com

TABLE 6.5 Dielectric Strength Correction Factors for Altitudes Greater Than 1000 m (3300 ft)

Altitude (m)	Altitude (ft)	Altitude Correction Factor for Dielectric Strength
1000	3,300	1.0
1200	4,000	0.98
1500	5,000	0.95
1800	6,000	0.92
2100	7,000	0.89
2400	8,000	0.86
2700	9,000	0.83
3000	10,000	0.80
3600	12,000	0.75
4200	14,000	0.70
4500	15,000	0.67

Source: IEEE C57.12.01-2005 (R-2005), *IEEE Standard General Requirements for Dry-Type Distribution and Power Transformers Including Those with Solid Cast and/or Resin-Encapsulated Windings.*

Sound level of transformers installed indoors can be reduced with installation of sound-attenuating walls and vibrations reduced by use of isolation pads and flexible connections to winding terminals.

Gas may condense in a gas-sealed transformer left de-energized for a significant period of time at low ambient temperature. Supplemental heating may be required to vaporize the gas before energizing the transformer [6].

6.8 Limits of Temperature Rise

Winding-temperature rise limits are chosen so that the transformer will experience normal life expectancy for the given winding insulation system under usual operating conditions. Table 6.6 indicates the limits of temperature rise for the thermal insulation systems most commonly applied. Operation at rated load and loading above nameplate will result in normal life expectancy. A lower average winding-temperature rise, 90°C rise for 180°C temperature class and 90°C or 115°C rise for 220°C temperature class, may be designed providing increased life expectancy and additional capacity for loading above nameplate rating. When transformer windings are designed for loading above nameplate rating, other current-carrying components such as cable, bus, terminations should also be designed for the additional capacity.

TABLE 6.6 Limits of Temperature Rise for Commonly Applied Thermal Insulation Systems

Winding Hottest-Spot Temperature Rise (°C) for Normal Life Expectancy				
Insulation System Temperature Class (°C)	Continuous Operation at Rated Load [7]	Loading above Nameplate Rating 30°C Ambient [10]	Loading above Nameplate Rating 40°C Ambient	Average Winding Temperature Rise (°C) [7]
130	90	120	130	75
150	110	140	150	90
180	140	170	180	115
200	160	190	200	130
220	180	210	220	150

www.EngineeringEbooksPdf.com

6.9 Transformer Loading

Dry-type transformers may be loaded above nameplate for short periods of time. Higher than normal operating temperatures when loaded above nameplate rating or high ambient temperatures reduce life expectancy. Refer to Table 6.6 for limits of temperature rise for operation at rated load and loading above nameplate. Loading equations are as follows:

Equivalent load for any portion of the daily load cycle:

$$L_{EQ} = \left[\frac{\left(L_1^2 t_1 + L_2^2 t_2 + \cdots + L_n^2 t_n \right)}{(t_1 + t_2 + \cdots + t_n)} \right]^{0.5} \tag{6.1}$$

where

$L_1^2, L_2^2, \ldots, L_n^2$ are the various load steps

$t_1, t_2, \ldots, t_n$ is the duration (generally 1 h increments) of the respective load steps

The 12 h period preceding peak loading is generally adequate for determining the initial equivalent load.

Calculations due to transient loading:
Initial winding hot-spot temperature rise, °C:

$$\Delta\theta_{HS,i} = \Delta\theta_{HS,r} \left(\frac{L_i}{L_r} \right)^{2m} \tag{6.2}$$

where

$\Delta\theta_{HS,r}$ is the winding hottest-spot temperature rise at rated load

m is an empirical constant—0.8 for ventilated self-cooled, 0.7 for sealed self-cooled, and 1.0 for forced-air cooled windings

L_i is the initial loading for time period

L_r is the rated nameplate loading

Winding hottest-spot temperature rise due to transient loading, °C:

$$\Delta\theta_{HS} = (\Delta\theta_{HS,U} - \Delta\theta_{HS,i})(1 - e^{-t/\tau}) + \Delta\theta_{HS,i} \tag{6.3}$$

where

$\Delta\theta_{HS,U}$ and $\Delta\theta_{HS,i}$ are ultimate and initial winding hot-spot temperatures, respectively

t is the time duration

τ is the winding time constant

Winding time constant at rated load:

$$\tau_r = \left(\frac{C\Delta\theta_{HS,r}}{W_r} \right) \tag{6.4}$$

where

W_r is the rated watts loss at 20°C

C is the thermal capacity of the winding in watts-minutes per °C

C is 0.106 weight of copper windings or = 0.033 weight of core and coils; C is 0.260 weight of aluminum windings or = 0.44 weight of core and coils

www.EngineeringEbooksPdf.com

Winding time constant when $m \neq 1$:

$$\tau = \tau_r [((\Delta\theta_{HS,U}/\Delta\theta_{HS,r}) - (\Delta\theta_{HS,i}/\Delta\theta_{HS,r}))/((\Delta\theta_{HS,U}/\Delta\theta_{HS,r})^{1/m} - (\Delta\theta_{HS,i}/\Delta\theta_{HS,r})^{1/m})] \tag{6.5}$$

Winding hottest-spot temperature due to transient loading, °C:

$$\theta_{HS} = \theta_A + \Delta\theta_{HS} \tag{6.6}$$

where θ_A is ambient temperature in °C.

6.10 Accessories

The winding-temperature indicator can be furnished with a thermal relay with contacts for starting fans, providing indication and/or alarm of winding temperature approaching or exceeding maximum operating limits, or for disconnecting the transformer. The winding-temperature indicator may also provide communication outputs (i.e., RS 232 port) for remote monitoring of the transformer.

For sealed dry-type transformers, a gas-pressure switch can be furnished with contacts to provide indication and/or alarm of gas-pressure deviation from recommended range of operating pressure.

6.11 Fault Protection

Limiting exposure time to thermal and mechanical stresses from external faults requires coordination of transformer short-circuit withstand capability and the protective device's time-current characteristics. When transformer through-faults occur infrequently, only the effect of thermal stress is considered for elevated temperature within acceptable time limits. When transformer through-faults occur frequently, both thermal and mechanical stresses are considered since the cumulative effect of mechanical stresses can result in damage to the transformer [11].

Where fuses are installed, maximum transformer protection is provided with tight fusing (i.e., low fusing ratio), which also coordinates better with source side protection. However, where lightning-induced voltages are of primary concern, overvoltage protection is provided by larger fuse ratings that also limit nuisance operations. In addition to thermal and mechanical fault protection, fusing and protective relaying provide protection against electrical faults [12].

Transformer primary fuses provide overcurrent protection for external faults and limited protection for internal faults on transformers less than 10 MVA. Three-phase transformers require additional protection for single-phasing fault conditions [13].

Overcurrent relaying provides protection from external faults. When a transformer is subjected to many through-faults or auto-reclosing into line faults, overcurrent relaying with very inverse characteristics provides faster fault clearing.

Percentage differential relaying provides protection from internal faults and is tolerant of mismatch CT errors at high currents. The addition of harmonic restraint avoids nuisance tripping due to transformer inrush and CT saturation.

Ground fault relaying provides protection from single phase-to-ground faults on the transformer secondary.

6.12 Surge Protection

For transformers with exposure to lightning or other voltage surges, protective surge arresters should be coordinated with transformer basic lightning impulse insulation level (BIL). The lead length connecting transformer bushing to arrester—and arrester ground to neutral—should be of minimum length

www.EngineeringEbooksPdf.com

TABLE 6.7 Transformer BILs

Nominal System Voltage	BIL (kV)
250	None
600	10
1,200	10
2,500	20
5,000	30
8,700	45
15,000	60
25,000	110
34,500	150

Source: IEEE C57.12.01-2005 (R-2005), *IEEE Standard General Requirements for Dry-Type Distribution and Power Transformers Including Those with Solid Cast and/or Resin-Encapsulated Windings.*

to eliminate inductive voltage drop in the ground lead and ground current [14]. Table 6.7 provides transformer basic impulse-insulation levels (BILs) corresponding to nominal system voltage; these BILs are specified for positive polarity waveforms. Lower BILs can be applied where surge arresters provide appropriate protection. At 25 kV and above, higher BILs may be required due to exposure to overvoltage or for a higher protective margin [7].

6.13 Harmonics

Stray magnetic flux results in losses in the windings, core, clamps, tanks, and other iron parts. As winding eddy current loss is proportional to the square of the load current and square of the frequency, excessive winding loss can cause an abnormal rise in winding temperature. Winding-temperature rise in dry-type transformers is more sensitive to the magnitude and distribution of eddy current loss within the winding; eddy current loss in the core, clamps, tank, etc., does not affect winding-temperature rise [15]. The harmonic loss factor indicates the effect of nonsinusoidal load current on temperature rise for determination of transformer-loading capability [16]. Nonsinusoidal load current may have a dc component that increases core loss slightly but increases excitation current and audible sound more significantly [17].

6.14 Dry-Type Transformer Maintenance

Maintenance efforts can be minimized by attentiveness to installation. Adequate clearance from walls, obstructions, and other equipment permits unrestricted access for maintenance. Adequate ventilation is essential for proper cooling. Restricted natural airflow may necessitate adding ventilation to maintain efficient cooling of indoor transformers.

The frequency of transformer inspection depends upon operating conditions. Inspection mainly consists of visual observations including the following:

- Accumulated dust or dirt on windings, insulating surfaces, any visible portions of internal coil-cooling ducts, louvers, and screens
- Overheating, tracking, carbonization, or cracks of insulation and insulators; and chipped insulators
- Arcing or overheating of core laminations
- Corroded or loose connections
- Condition of tap changers and terminal boards
- Rusting, corroding, or deterioration of painted surfaces

www.EngineeringEbooksPdf.com

- Deterioration of isolation dampers
- Condition of fans, motors, and other auxiliary devices
- Adequacy of ventilation

The transformer should be de-energized and grounded in accordance with established safety procedures before removing side panels. Excessive dust or residues on windings and insulators should be removed with particular attention to the top and bottom ends of winding assemblies and ventilation ducts to permit natural air circulation and reduce the possibility of insulation breakdown.

Dust should be vacuumed away; then insulating surfaces should be cleaned with dry, lint-free rags or soft bristled brushes. Use of solvents or detergents is not recommended as they may accelerate insulation deterioration and may leave residues attracting dust and contaminants. Dust in inaccessible areas not removed by vacuuming can be blown clear using compressed air or nitrogen with dew point of −50°F or less and pressure regulated at or below 25 psi [18].

In addition to visual inspection, maintenance may include one or more of the following diagnostics [19]:

Infrared inspection—Ambient temperature and loading at time of inspection should be recorded. Examine insulators, connection components, and all sides of the enclosure for determining normal operating temperature. A comparison of phases will indicate a uniform temperature pattern if loading is balanced. Record any temperature rise ≥10°C above normal. Significant rise in temperature is a cause for investigation [20].

Winding insulation resistance—The significance of recorded readings is dependent upon transformer design, and insulation dryness and cleanliness. When insulation resistance is measured, the trend should be plotted, necessitating all measurements to be made at the same voltage. Substantial variation in the plotted values is a cause for investigation.

Insulation power factor—The insulation power factor of different transformer vintages and manufacturers varies over a wide range necessitating establishment of a baseline for each transformer with trending and analysis of data for significant variations.

Turns ratio—The measured transformer turns ratio should be within 0.5% of the calculated ratio. Ratios outside this limit may indicate winding damage.

Audible sound—Significant changes in sound characteristic as well as sound level may indicate loose clamping hardware, defective vibration isolators, transformer overexcitation, or possible damage to winding insulation.

References

1. Coltman, J.W., The transformer, *IEEE Industry Applications Magazine*, January/February, 8–15, 2002.
2. Jeszenszky, S., History of transformers, *IEEE Power Engineering Review*, December, 9–12, 1996.
3. ANSI/IEEE C57.12.50-1981 (R-1998), American national standard requirements for ventilated dry-type distribution transformers, 1 to 500 kVA, single-phase, and 15 to 500 kVA, three-phase, with high-voltage 601 to 34500 volts, low-voltage 120 to 600 volts.
4. ANSI/IEEE Standard C57.12.52-1981 (R-1998), *American National Standard Requirements for Sealed Dry-Type Power Transformers, 501 kVA and Larger, Three-Phase, with High-Voltage 601 to 34500 volts, Low-Voltage 208Y/120 to 4160 volts*.
5. IEEE 100-2000, *The Authoritative Dictionary of IEEE Standard Terms*, 7th edn., IEEE, Piscataway, NJ, 2000.
6. IEEE Standard C57.94-1982 (R-2000), *IEEE Recommended Practice for Installation, Application, Operation, and Maintenance of Dry-Type General Purpose Distribution and Power Transformers*.
7. IEEE C57.12.01-2005 (R-2005), *IEEE Standard General Requirements for Dry-Type Distribution and Power Transformers Including Those with Solid Cast and/or Resin-Encapsulated Windings*.
8. IEC Standard 60076-11, Edition 1.0 (2004), *Dry-Type Power Transformers*.
9. IEEE C2-2002, *National Electrical Safety Code*.

www.EngineeringEbooksPdf.com

10. IEEE Standard C57.96-1999 (R-2005), *IEEE Guide for Loading Dry-Type Distribution and Power Transformers*.
11. IEEE C57.12.59-2001 (R-2006), *IEEE Standard for Dry-Type Transformer Through-Fault Duration*.
12. Cook, C.J. and Niemira, J.K., Overcurrent protection of transformers—Traditional and new fusing philosophies for small and large transformers, part 2, *Electricity Today*, 15(7), 25–32, 2003.
13. IEEE C37.91-2000, *IEEE Guide for Protection Relay Applications to Power Transformers*.
14. IEEE C62.22-1997, *IEEE Guide for the Application of Metal-Oxide Surge Arresters for Alternating Current Systems*.
15. Pierce, L., Transformer design and application considerations for nonsinusoidal load currents, *IEEE Transactions on Industry Applications*, 32(3), 633–645, May/June 1996.
16. IEEE C57.110-1998 (R-2004), *IEEE Recommended Practice for Establishing Transformer Compatibility when Supplying Non-Sinusoidal Currents*.
17. IEEE 519-1992, *IEEE Recommended Practices and Requirements for Harmonic Control in Electrical Power Systems*.
18. Raymond, C.T., Sensible transformer maintenance, part 2, *Electrical Construction and Maintenance*, February 1, 1995.
19. IEEE C57.12.91-2001, IEEE standard test code for dry-type distribution and power transformers.
20. Epperly, R., Herberstein, G.E., and Eads, L.G., Thermography, a tool for reliability and safety, *IEEE Industry Application Magazine*, January/February, 28–32, 1999.

www.EngineeringEbooksPdf.com

www.EngineeringEbooksPdf.com

7

Instrument Transformers

7.1 Overview 7-1
7.2 Transformer Basics 7-2
Core Design • Burdens • Relative Polarity • Industry Standards • Accuracy Classes • Insulation Systems • Thermal Ratings • Primary Winding
7.3 Voltage Transformer 7-14
Overvoltage Ratings • VT Compensation • Short-Circuit Operation • VT Connections • Ferroresonance • VT Construction • Capacitive-Coupled Voltage Transformer
7.4 Current Transformer 7-19
Saturation Curve • CT Rating Factor • Open-Circuit Conditions • Overvoltage Protection • Residual Magnetism • CT Connections • CT Construction • Proximity Effects • Linear Coupler • Direct-Current Transformer • Slipover CT Installations
7.5 Combination Metering Units 7-33
Primary Metering Units
7.6 Optical Transducers 7-33
Optical Current Sensors • Optical Voltage Transducer
Bibliography 7-35

Randy Mullikin
Meramec Electrical Products

This chapter covers the fundamental basics and theory of operation of instrument transformers. Common types of instrument transformers and construction highlights will be discussed. Application features and characteristics of instrument transformers will be covered without providing details of three-phase circuit fundamentals, fault analysis, or the operation and selection of protective devices and measuring instruments. Though incomplete, this chapter covers the common practices used in industry over the last 30 years.

7.1 Overview

Instrument transformers are primarily used to provide isolation between the main primary circuit and the secondary control and measuring devices. This isolation is achieved by magnetically coupling the two circuits. In addition to isolation, levels in magnitude are reduced to safer levels.

Instrument transformers are divided into two categories: voltage transformers (VTs) and current transformers (CTs). The primary winding of the VT is connected in parallel with the monitored circuit, while the primary winding of the CT is connected in series (see Figure 7.1). The secondary windings proportionally transform the primary levels to typical values of 120 V and 5 A. Monitoring devices such as wattmeters, power-factor (PF) meters, voltmeters, ammeters, and relays are often connected to the secondary circuits.

www.EngineeringEbooksPdf.com

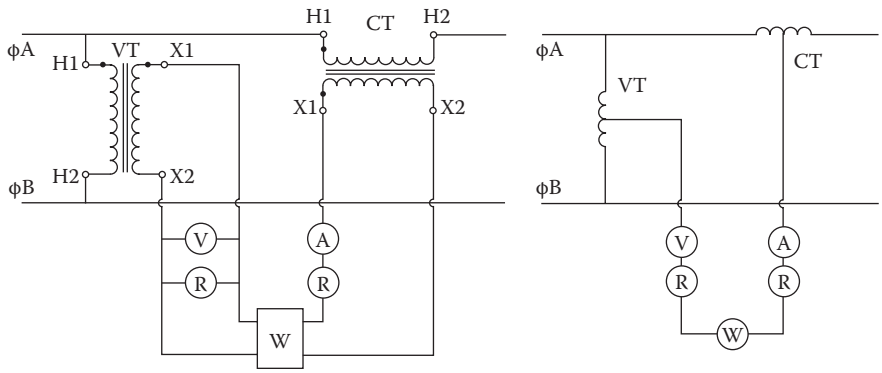

FIGURE 7.1 Typical wiring and single-line diagram.

7.2 Transformer Basics

An ideal transformer (see Figure 7.2) magnetically induces from the primary circuit a level exactly proportional to the turns ratio into the secondary circuit and exactly opposite in phase, regardless of the changes occurring in the primary circuit. A review of the general relationships of the ideal case yields the transformation ratio

$$\frac{V_P}{V_S} = \frac{N_P}{N_S} \tag{7.1}$$

and the law of conservation of energy yields

$$V_P I_P = V_S I_S \tag{7.2}$$

$$I_P N_P = I_S N_S \tag{7.3}$$

where

V_P is the primary-terminal voltage
V_S is the secondary-terminal voltage
I_P is the primary current
I_S is the secondary current
N_P represents primary turns
N_S represents secondary turns

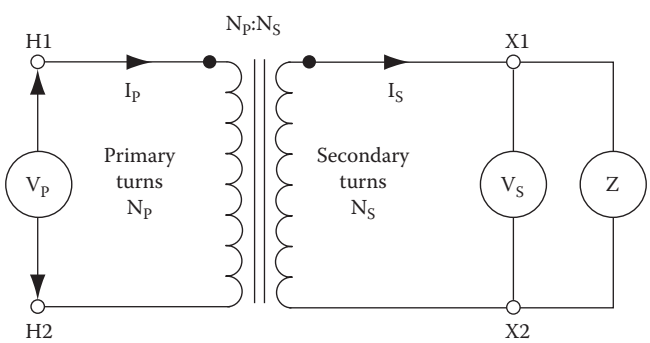

FIGURE 7.2 Ideal transformer.

www.EngineeringEbooksPdf.com

7.2.1 Core Design

In practice, the use of steel core material is a major factor in forcing the electromagnetic transformer to deviate from the ideal. The available core steels offer differing properties around which to design. The most common type of steel used is electrical-grade grain-oriented silicon-iron. This material offers low losses at high flux densities, but it has low initial permeability. Exotic materials, such as nickel-iron, offer high initial permeability and low losses, but they have much lower saturation levels. These exotics are often used when extremely high accuracy is desired, but they are cost prohibitive in standard products. A typical excitation characteristic for instrument transformers is shown in Figure 7.3. There are three areas of interest: the ankle region, the knee point, and saturation. The ankle region is at the lowest permeability and flux levels. Due to the uncertainties in this region, performance will deviate from core to core. Steel manufacturers never guarantee performance in this region. As a result, the manufacturer must have tight control over its annealing process. The exotic core steels have a well-defined characteristic to as low as 0.001 T. The knee represents the maximum permeability and is the beginning of the saturation zone. The area between the ankle and the knee is the linear portion, where performance is predictable and repeatable. Saturation is the point at which no additional flux enters the core.

There are occasions when the designer would like the benefits of both silicon-iron and nickel-iron. A core using two or more different types of steel is called a composite core. The ratio of each depends on the properties desired and the overall cost. The most commonly used of the nickel-iron family are the 49% and 80% nickel content varieties. Table 7.1 shows some typical characteristics as well as some trade names. Figure 7.4 demonstrates how two cores of equal turns, area, and magnetic path are added to become one. The voltages will add, and the net saturation flux is the sum of one-half of the individual saturation density of each core, that is, ½1.960 + ½0.760 = 1.360 T.

Steel type and lamination thickness are additional factors in reducing losses. Other materials, such as noncrystalline or amorphous metals, offer lower losses but are difficult to fabricate. However, new developments in processing are improving steel quality. New compositions that claim to perform like

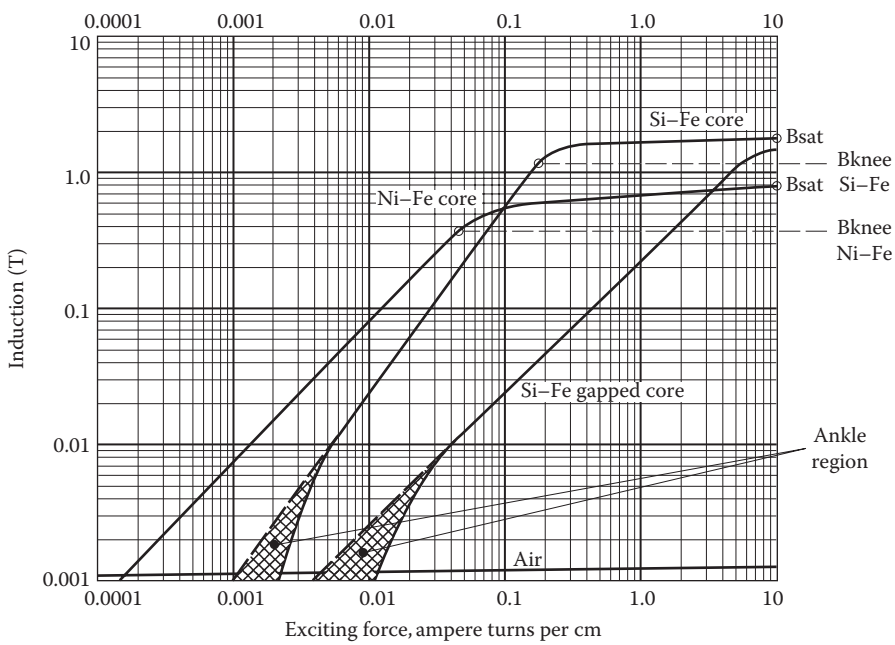

FIGURE 7.3 Typical characteristic curve.

www.EngineeringEbooksPdf.com

TABLE 7.1 Core Materials

Material (0.009–0.014 in.)	Saturation Density, T	Initial Permeability, μ @ 0.004 T	Maximum Permeability, μ @ T	Trade Names
80% Ni/Fe/Mo	0.760	35,000	150 k @ 0.4 T	SuperPerm 80[a] Hymu 80 Mu-Metal[b] 4–79 Permalloy[c]
49% Ni/Fe/Mo	1.200	5,000	60 k @ 0.4 T	Super Perm 49[a] High Perm 49[c] 48-Ni 4750[b]
3% Si/Fe—M3	1.900	8,000	51 k @ 1.15 T	Microsil[a] Silectron[d] Oriented T-S[e] Hipersil[a]
3% Si/Fe—M4	1.900	7,200	48 k @ 1.15 T	
3% Si/Fe—M6	1.900	6,700	40 k @ 1.15 T	

[a] Magnetic Metals Co.
[b] Allegheny Ludlum Steel.
[c] Carpenter Steel.
[d] Arnold Engineering.
[e] Armco (now AK Steel).

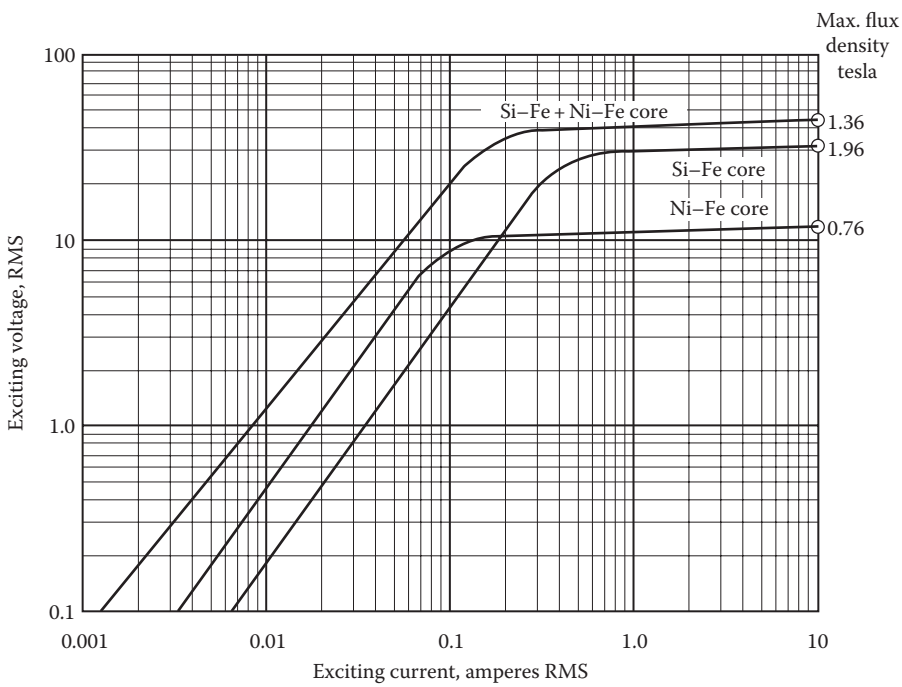

FIGURE 7.4 Typical composite core.

www.EngineeringEbooksPdf.com

nickel—at a fraction of its cost—are now surfacing. But regardless of the improvement offered by these materials, there are some inherent properties that must be overcome:

1. Some portion of the primary energy is required to establish the magnetic flux that is required to induce the secondary winding.
2. The magnetization of the core is nonlinear in nature.

From statement 1, the primary energy required to magnetize the core is a product of the flux in the core and the magnetic reluctance of the core. This energy is called the magnetomotive force, mmf, and is defined as follows:

$$\text{mmf} = \phi\Re = k_1\left[\frac{Z_S I_S}{N_S f}\right]k_2\left[\frac{\text{mmp}}{A_C\mu_C}\right] = k_1k_2\left[\frac{Z_S\, I_S\text{mmp}}{N_S f A_C\mu_C}\right] \tag{7.4}$$

where

ϕ is the flux in the core
$\Re$ is the magnetic reluctance
k_1 is the constant of proportionality
k_2 is the constant of proportionality
Z_S is the secondary impedance
mmp is the core mean magnetic path
I_S is the secondary current
A_C is the core cross-sectional area
N_S is the number of secondary turns
μ_C is the permeability of core material
f is the frequency, hertz

The magnetic reluctance, in terms of Ohm's law, is analogous to resistance and is a function of the core type used. An annular or toroidal core, one that is a continuous tape-wound core, has the least amount of reluctance. A core with a straight cut through all of its laminations, thereby creating a gap, exhibits high reluctance. Minimizing gaps in core constructions reduces reluctance. Figure 7.5 shows some of the more common core and winding arrangements. Generally—after the steel material is cut, stamped, or wound—it undergoes a stress-relief anneal to restore the magnetic properties that may have been altered during fabrication. After the annealing process, the core is constructed and insulated.

From statement 2, the core permeability, μ_C, changes with flux density, ϕ/A_C. Neglecting leakage flux, we can now see the error-producing elements. From Equation 7.4, an increase in any of the elements in the denominator will decrease errors, while an increase in Z_S and mmf will increase errors.

There are also other contributing factors that, based on the construction of the instrument transformer, can introduce errors. The resistance of the windings, typically of copper wire and/or foil, introduces voltage drops (see Figure 7.6). Moreover, the physical geometry and arrangement of the windings—with respect to each other and the core—can introduce inductance and, sometimes, capacitance, which has an effect on magnetic leakage, reducing the flux linkage from the primary circuit and affecting performance. A winding utilizing all of its magnetic path will have the lowest reactance. Figure 7.5 shows some typical winding arrangements and leakage paths.

Figure 7.6 illustrates an equivalent transformer circuit, where

V_P, V_S represents primary- and secondary-terminal voltage
E_P, E_S represents primary- and secondary-induced voltage
I_P, I_S represents primary and secondary current
N_P, N_S represents primary and secondary turns
R_P, R_S represents primary- and secondary-winding resistance
X_P, X_S represents primary- and secondary-winding reactance

www.EngineeringEbooksPdf.com

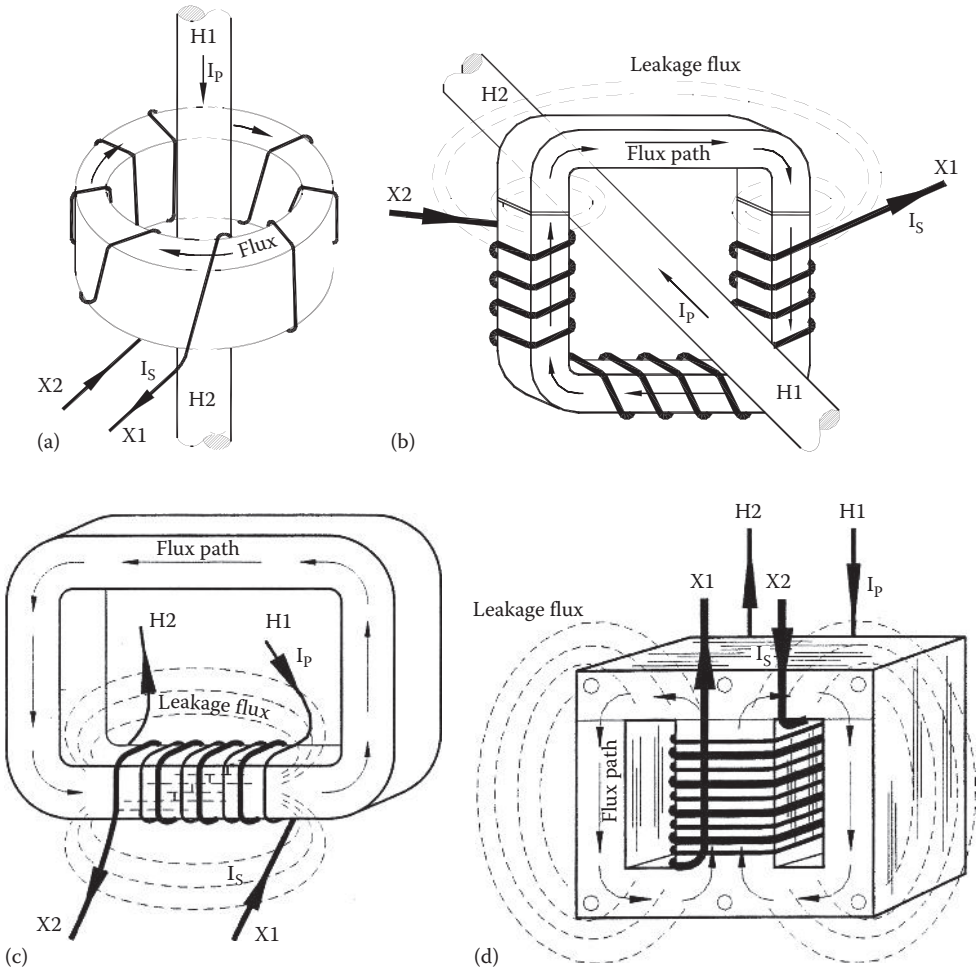

FIGURE 7.5 Typical core and winding arrangements. (a) Tape-wound toroidal core with fully distributed winding. Note the absence of leakage flux, which exists but is considered to be negligible. Sensitivity to primary-conductor position is also negligible. The primary can also consist of several turns. (b) Cut core with winding partially distributed. Leakage flux, in this case, depends on the location of the primary conductor. As the conductor moves closer to the top of the core, the leakage flux increases. (c) Distributed-gap core with winding distributed on one leg only. This type has high leakage flux but good coupling since the primary and secondary windings occupy the same winding space. (d) Laminated "El" core, shell type. This type has high leakage flux since a major portion of magnetic domains are against the direction of the flux path. The orientation is not all in the same direction, as it is with a tape-wound core.

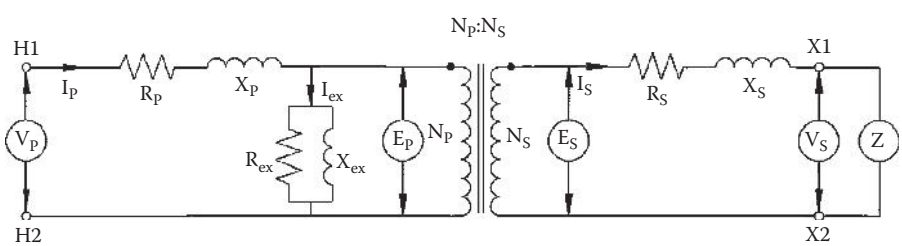

FIGURE 7.6 Equivalent transformer circuit.

www.EngineeringEbooksPdf.com

R_{ex} represents wattful magnetizing component
Z represents secondary burden (load)
X_{ex} represents wattless magnetizing component
I_{ex} represents magnetizing current

Those factors not directly related to construction would be (1) elements introduced from the primary circuit, such as harmonics, that account for hysteresis and eddy-current losses in the core material and (2) fault conditions that can cause magnetic saturation. Most all can be compensated for by careful selection of core and winding type. It is also possible to offset error by adjusting turns on one of the windings, preferably the one with the higher number of turns, which will provide better control. It is also possible to compensate using external means, such as resistance, capacitance, and inductance (RCL) networks, but this limits the transformer to operation to a specific load and can have adverse effects over the operating range.

7.2.2 Burdens

The burden of the instrument transformer is considered to be everything connected externally to its terminals, such as monitoring devices, relays, and pilot wiring. The impedance values of each component, which can be obtained from manufacturer data sheets, should be added algebraically to determine the total load. The units of measurement must be the same and preferably in the rectangular form R + jX. Table 7.2 shows typical ranges of burdens for various devices used.

For the purpose of establishing a uniform basis of test, a series of standard burdens has been defined for calibrating VTs and CTs. The burdens are inductive and designated in terms of VA for VTs and in ohms for CTs. All are based on 120 V and 5 A at 60 Hz. They can be found in Table 7.3.

TABLE 7.2 Typical Burden Values for Common Devices

	VTs		CTs	
Device	Burden, VA	PF	Burden, VA	PF
Voltmeter	0.1–20	0.7–1.0	—	—
Ammeter	—	—	0.1–15	0.4–1.0
Wattmeter	1–20	0.3–1.0	0.5–25	0.2–1.0
PF meter	3–25	0.8–1.0	2–6	0.5–0.95
Frequency meter	1–50	0.7–1.0	—	—
kWh meter	2–50	0.5–1.0	0.25–3	0.4–0.95
Relays	0.1–50	0.3–1.0	0.1–150	0.3–1.0
Regulator	50–100	0.5–0.9	10–180	0.5–0.95

TABLE 7.3 Standard Metering and Relaying Class Burdens

	VTs			CTs		
Typical Use	Burden Code	Burden, VA	PF	Burden Code	Burden, VA	PF
Metering	W	12.5	0.1	B0.1	2.5	0.9
Metering	X	25	0.7	B0.2	5	0.9
Metering	M	35	0.2	B0.5	12.5	0.9
Metering	—	—	—	B0.9	22.5	0.9
Metering	—	—	—	B1.8	45	0.9
Relaying	Y	75	0.85	B1.0	25	0.5
Relaying	Z	200	0.85	B2.0	50	0.5
Relaying	ZZ	400	0.85	B4.0	100	0.5
Relaying	—	—	—	B8.0	200	0.5

www.EngineeringEbooksPdf.com

7.2.3 Relative Polarity

The instantaneous relative polarity of instrument transformers may be critical for proper operation in metering and protection schemes. The basic convention is that as current flows into the H1 terminal, it flows out of the X1 terminal, making this polarity subtractive. These terminals are identified on the transformer by name and/or a durable and noticeable mark such as a white dot or black stripe.

7.2.4 Industry Standards

In the United States, the utility industry relies heavily on IEEE C57.13, *Requirements for Instrument Transformers*. This standard establishes the basis for the test and manufacture of all instrument transformers used in this country. It defines the parameters for insulation class and accuracy class. The burdens listed in Table 7.3 are defined in IEEE C57.13. Often, standards for other electrical apparatus that may use instrument transformers have adopted their own criteria based on IEEE C57.13. These standards, along with utility practices and the National Electric Code, are used in conjunction with each other to ensure maximum safety and system reliability. The industrial market may also coordinate with Underwriters Laboratories. As the marketplace becomes global, there is a drive for standard harmonization with the International Electrotechnical Commission (IEC). It is important to know the international standards in use; some of the more common are listed in Table 7.4. Most major countries originally developed their own standards. Today, many have adopted IEC standards to supersede their own, in part or entirely. However, one cannot assume that because the base standard number mimics the IEC base number, they are the same—they are NOT. In fact, the Canadian Standards Association (CSA) only uses the IEC material as reference and has still left its original nomenclature from CAN3-C13 intact. The British and Australian standards have made slight modifications to their versions.

7.2.5 Accuracy Classes

Instrument transformers are rated by performance in conjunction with a secondary burden. As the burden increases, the accuracy class may, in fact, worsen. For revenue-metering use, the coordinates of ratio error and phase error must lie within a prescribed parallelogram, as seen in Figures 7.7 and 7.8 for VTs and CTs, respectively. This parallelogram is based on a 0.6 system PF. The ratio error (RE) is converted into a ratio correction factor (RCF), which is simply

$$\mathrm{RCF} = 1 - \left(\frac{\mathrm{RE}}{100}\right) \tag{7.5}$$

TABLE 7.4 Instrument Transformer Standards

Country	CT Standard	VT Standard
United States	IEEE C57.13 IEEE C57.13.6 ANSI C12.11	IEEE C57.13 IEEE C57.13.6 ANSI C12.11
Canada	CSA C-60044-1 formerly CAN-C13-M83	CSA C60044-2 formerly CAN-C13-M83
IEC	IEC 60044-1 formerly 185	IEC 60044-2 formerly 186
United Kingdom	BS 60044-1 formerly BS 3938	BS 60044-2 formerly BS 3941
Australia	AS 60044-1 formerly AS 1675	AS 60066-2 formerly AS 1243
Japan	JIS C 1731 and C 1731-1 JIS C 1736 and C 1736-1	JIS C 1731 and C 1731-2 JIS C 1736 and C 1736-2

www.EngineeringEbooksPdf.com

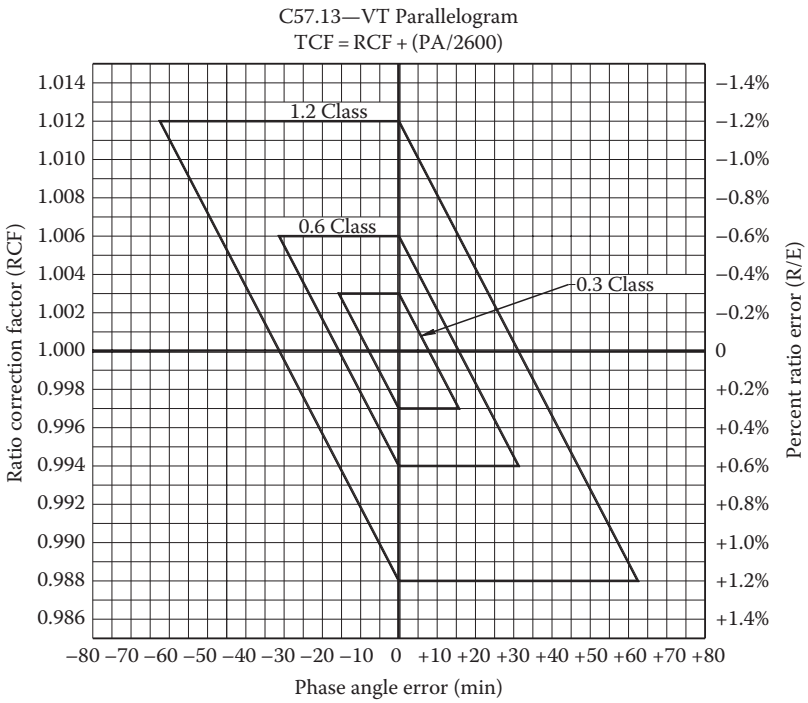

FIGURE 7.7 Accuracy coordinates for VTs.

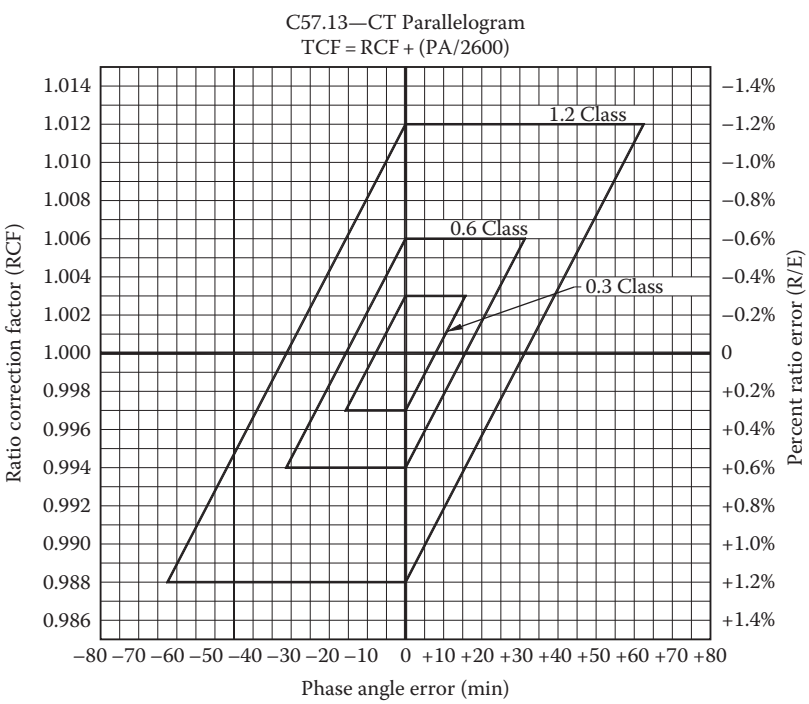

FIGURE 7.8 Accuracy coordinates for CTs.

www.EngineeringEbooksPdf.com

The total-error component is the transformer correction factor (TCF), which is the combined ratio and phase-angle error. The limits of phase-angle error are determined from the following relationship:

$$\mathrm{TCF} = \mathrm{RCF} \pm \left[\frac{\mathrm{PA}\tan\theta}{3438}\right] \tag{7.6}$$

where

TCF is the transformer correction factor
RCF is the ratio correction factor
PA is the phase-angle error, min
θ is the supply-system PF angle
+ is for VTs only (see Figure 7.7)
− is for CTs only (see Figure 7.8)
3438 is the minutes of angle in one radian

Therefore, using 0.6 system PF (θ = 53°) and substituting in Equation 7.6, the relationship for VTs is

$$\mathrm{TCF} = \mathrm{RCF} + \left(\frac{\mathrm{PA}}{2600}\right) \tag{7.7}$$

and for CTs is

$$\mathrm{TCF} = \mathrm{RCF} - \left(\frac{\mathrm{PA}}{2600}\right) \tag{7.8}$$

The TCF is mainly applied when the instrument transformer is being used to measure energy usage. From Table 7.5, the limits of TCF are also the same as RCF. A negative RE will yield an RCF > 1, while a positive RE will yield an RCF < 1. The "adopted" class in Table 7.5 is extrapolated from these relationships and is recognized in industry. These class limits apply to both CT and VT with the differences being the test points.

The accuracy-class limits of the CT apply to the errors at 100% of rated current up through the rating factor of the CT. At 10% of rated current, the error limits permitted are twice that of the 100% class. There is no defined requirement for the current range between 10% and 100%, nor is there any requirement below 10%. There are certain instances in which the user is concerned about the errors below 10% and will rely on the manufacturer's guidance. Because of the nonlinearity in the core and the ankle region, the errors at low flux densities are exponential. As the current and flux density increase, the errors become linear up until the core is driven into saturation, at which point the errors increase at a tremendous rate (see Figure 7.9).

To address the need for higher accuracy and extended metering ranges, IEEE C57.13.6 Standard for High Accuracy Instrument Transformers was published. It introduced 0.15 class for both VTs and CTs,

TABLE 7.5 Accuracy Classes

	Accuracy Class	RCF Range	Phase Range, min	TCF Range
IEEE C57.13.6	0.15	1.0015–0.9985	±7.8	1.0015–0.9985
IEEE C57.13	0.3	1.003–0.997	±15.6	1.003–0.997
IEEE C57.13	0.6	1.006–0.994	±31.2	1.006–0.994
IEEE C57.13	1.2	1.012–0.988	±62.4	1.012–0.988
IEEE C57.13	2.4	1.024–0.976	±124.8	1.024–0.976
Adopted	4.8	1.048–0.952	±249.6	1.048–0.952

www.EngineeringEbooksPdf.com

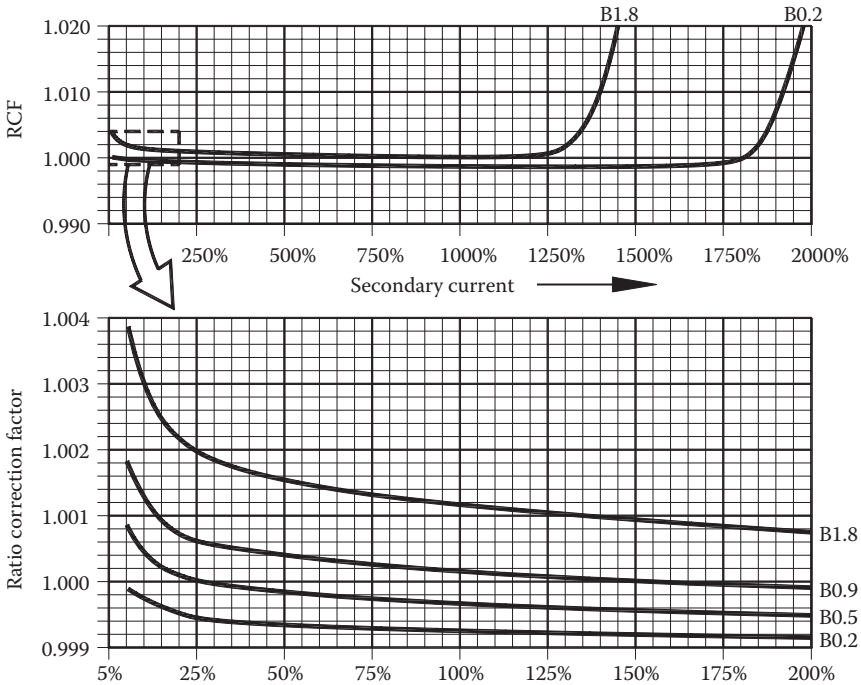

FIGURE 7.9 CT RCF characteristic curve.

except for CTs permitting 0.3 class limits at 5% rated current (in lieu of 10%). For CTs, 0.15S class was added where the class limit is constant down to 5% rated current. This standard also introduced two new burdens, E0.2 (5 VA) and E0.04 (1 VA) representing low electronic burdens at unity PF. The other standard burdens can be used with these new classes as well.

In the case of the VT, the accuracy-class range is between 90% and 110% of rated voltage for each designated burden. Unlike the CT, the accuracy class is maintained throughout the entire range. The manufacturer will provide test data at 100% rated voltage, but it can furnish test data at other levels if required by the end user. The response is somewhat linear over a long range below 90%. Since the normal operating flux densities are much higher than in the CT, saturation will occur much sooner at voltages above 110%, depending on the overvoltage rating.

Protection, or relay class, is based on the instrument transformer's performance at some defined fault level. In VTs, it may also be associated with an under- and overvoltage condition. In this case, the VT may have errors as high as 5% at levels as low as 5% of rated voltage and at the VT overvoltage rating. In CTs, the accuracy is based on a terminal voltage developed at 20 times nominal rated current. The limits of RCF are 0.90 to 1.10, or ±10% RE at 20 times nominal. This applies to rated burden or any burden less than rated burden. The limits of error at 100% rated current with rated burden are ±3%, or 0.97 to 1.03 RCF with no limit on phase error.

7.2.6 Insulation Systems

The insulation system is one of the most important features of the instrument transformer, establishing its construction, the insulation medium, and the unit's overall physical size. The insulation system is determined by three major criteria: dielectric requirements, thermal requirements, and environmental requirements.

Dielectric requirements are based on the source voltage to which the instrument transformer will be directly connected. This source will define voltage-withstand levels and basic impulse-insulation levels (BIL).

www.EngineeringEbooksPdf.com

TABLE 7.6 Low- and Medium-Voltage Dielectric Requirements

	Instrument Transformers (IEEE C57.13)		Other Equipment Standards[a]	
Class, kV	BIL, kV	Withstand Voltage, kV	BIL, kV	Withstand Voltage, kV
0.6	10	4	—	2.2
1.2	30	10	—	—
2.4	45	15	—	—
5.0	60	19	60	19
8.7	75	26	75/95	26/36
15.0	95/110	34	95/110	36/50
25.0	125/150	40/50	125/150	60
34.5	200	70	150	80
46	250	95	—	—
69	350	140	350	160

[a] IEEE C37.06, C37.20.1, C37.20.2, C37.20.3, C37.23.

TABLE 7.7 High-Voltage Dielectric Requirements

	Instrument Transformers (IEEE C57.13)		Other Equipment Standards (IEEE C37.06)	
Class, kV	BIL, kV	Withstand Voltage, kV	BIL, kV	Withstand Voltage, kV
115	450/550	185/230	550	215/260
138	650	275	650	310
161	750	325	750	365
230	900/1050	395/460	900	425
345	1300	575	1300	555
500	1675/1800	750/800	1800	860
765	2050	920	2050	960

In some cases, the instrument transformer may have to satisfy higher levels, depending on the equipment with which they are used. Equipment such as power switchgear and isolated-phase bus, for instance, use instrument transformers within their assembly, but they have test requirements that differ from the instrument-transformer standard. See Tables 7.6 and 7.7.

It is not uncommon to require a higher BIL class on a lower-voltage system for use in a highly polluted environment to increase the strike and creep distances. Levels of pollution are defined in the IEC standards.

Environmental requirements will help define the insulation medium. In indoor applications, the instrument transformer is protected from external weather elements. In outdoor installations, the transformer must endure all weather conditions from extremely low temperatures to severe UV radiation and be impervious to moisture penetration. The outer protection can range from fabric or polyester tape, varnish treatment, or thermoplastic housings to molding compounds, porcelain, or metal enclosures. Table 7.8 identifies, by voltage rating, the commonly used materials and construction types.

All installations above 69 kV are typically for outdoor service and are of the tank/oil/SF_6/porcelain construction type.

7.2.7 Thermal Ratings

An important part of the insulation system is the temperature class. For instrument transformers, only three classes are generally defined in the standard, and these are listed in Table 7.9. This rating is coordinated with the maximum continuous current flow allowable in the instrument transformer that will

www.EngineeringEbooksPdf.com

TABLE 7.8 Materials/Construction for Low- and Medium-Voltage Classes

Class, kV	Indoor Applications Materials/Construction	Outdoor Applications Materials/Construction
0.6	Tape, varnished, plastic, cast, or potted	Cast or potted
1.2–5.0	Plastic, cast	Cast
8.7	Cast	Cast
15.0	Cast	Cast or tank/oil/porcelain
25.0	Cast	Cast or tank/oil/porcelain
34.5	Cast	Cast or tank/oil/porcelain
46	Not commonly offered	Cast or tank/oil/porcelain
69	Not commonly offered	Cast or tank/oil/porcelain

Note: The term *cast* can imply any polymeric material, for example, butyl rubber, epoxy, urethane. *Potted* implies that the unit is embedded in a metallic housing with a casting material.

TABLE 7.9 Temperature Class: IEEE C57.13

	30°C Ambient		55°C Ambient
Temperature Class	Temperature Rise	Hot-Spot Temperature Rise	Temperature Rise
105°C	55°C	65°C	30°C
120°C	65°C	80°C	40°C
150°C	80°C	110°C	55°C

limit the winding heat rise accordingly. Of course, other classes can be used to fit the application, especially if the instrument transformer is part of an apparatus that has a higher temperature class, for example, when used under hot transformer oil or within switchgear, bus compartments, and underground network devices, where ambient temperatures can be 65°C–105°C. In these cases, a modest temperature rise can change the insulation-system rating. These apply to the instrument transformer under the most extreme continuous conditions for which it is rated. The insulation system used must be coordinated within its designated temperature class (Table 7.10). It is not uncommon for users to specify a higher insulation system even though the unit will never operate at that level. This may offer a more robust unit at a higher price than normally required but increase reliability.

7.2.8 Primary Winding

The primary winding is subjected to the same dynamic and thermal stresses as the rest of the primary system when large short-circuit currents and voltage transients are present. For CTs, it is the maximum asymmetrical peak current that can be detrimental, and for VTs, it is the magnitude of

TABLE 7.10 Temperature Class: General

Temperature Class	Hot-Spot Temperature Rise @ 30°C Ambient (40°C Maximum)
Class 90 (O)	50°C
Class 105 (A)	65°C
Class 130 (B)	90°C
Class 155 (F)	115°C
Class 180 (H)	140°C
Class 220 (C)	180°C

www.EngineeringEbooksPdf.com

overvoltage, both of which are dependent on duration of the event causing the disturbance. It must also be sized to safely carry the maximum continuous current without exceeding the insulation system's temperature class.

7.3 Voltage Transformer

The voltage transformer is connected in parallel with the circuit to be monitored. The nominal secondary voltage is typically 120 V, but only up through 150 kV BIL class. Above that, the nominal secondary voltage is 115 V. Under normal operating steady-state conditions, the voltage is constant; therefore, the operating flux density is constant. It operates under the same principles as power transformers, the significant differences being power capability, size, operating flux levels, and compensation. VTs are not typically used to supply raw power; however, they do have limited power ratings. They can often be used to supply temporary 120 V service for light-duty maintenance purposes where supply voltage normally would not otherwise be available. In switchgear compartments, they may be used to drive motors that open and close circuit breakers. In voltage regulators, they may power a tap-changing drive motor. The power ranges are from 500 VA and less for low-voltage VT, 1–3 kVA for medium-voltage VT, and 3–5 kVA for high-voltage VT. Since they have such low power ratings, their physical size is much smaller. The performance characteristics of the VT are based on standard burdens and PFs, which are not always the same as the actual connected burden. It is possible to predict, graphically, the anticipated performance when given at least two reference points. Manufacturers typically provide these data with each VT produced. From that, one can construct what is often referred to as the VT circle diagram, or fan curve, shown in Figure 7.10. Knowing the ratio-error and phase-error coordinates, and the values of standard burdens, the graph can be produced to scale in terms of VA and PF. Other PF lines can be inserted to pinpoint actual circuit conditions. Performance can also be calculated using the same phasor concept by the

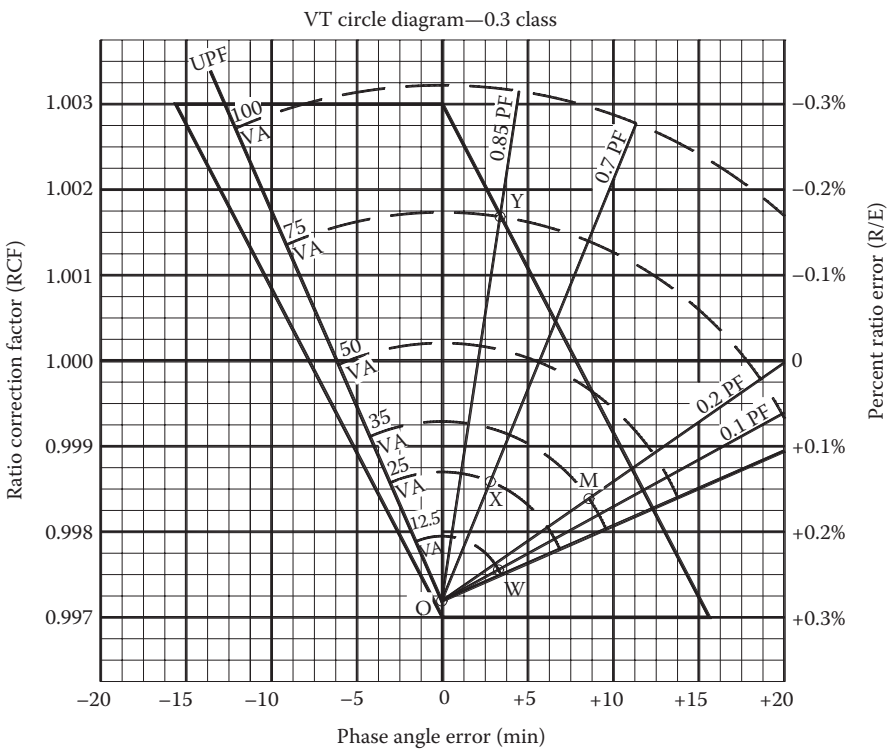

FIGURE 7.10 VT circle diagram (fan curves).

www.EngineeringEbooksPdf.com

following relationships provided that the value of the unknown burden is less than the known burden. Two coordinates must be known, at zero and at one other standard burden value:

$$RCF_x = \left[\frac{B_x}{B_t}\right][(RCF_t - RCF_0)\cos(\theta_t - \theta_x) + (\gamma_t - \gamma_0)\sin(\theta_t - \theta_x)] \tag{7.9}$$

$$\gamma_x = \left[\frac{B_x}{B_t}\right][(\gamma_t - \gamma_0)\cos(\theta_t - \theta_x) - (RCF_t - RCF_0)\sin(\theta_t - \theta_x)] \tag{7.10}$$

where

RCF_x is the RCF of new burden
RCF_t is the RCF of known burden
RCF_0 is the RCF at zero burden
γ_x is the phase error of new burden, radians (to obtain γ_x in minutes, multiply value from Equation 7.7 by 3438)
γ_t is the phase error of known burden, radians
γ_0 is the phase error at zero burden, radians
B_x is the new burden
B_t is the known burden
θ_x is the new burden PF angle, radians
θ_t is the known burden PF angle, radians

7.3.1 Overvoltage Ratings

The operating flux density is much lower than in a power transformer. This is to help minimize the losses and to prevent the VT from possible overheating during overvoltage conditions. VTs are normally designed to withstand 110% rated voltage continuously unless otherwise designated. IEEE C57.13 divides VTs into groups based on voltage and application (see Table 7.11). Other standards have more-stringent requirements, such as the Canadian standard, which defines its group 3 VTs for line-to-ground

TABLE 7.11 IEEE VT Group Classifications

IEEE Group	Insulation Class, BIL	Type	Continuous Duty	Overvoltage Duty	Comments
1	10–150 kV	All	100%	125% for 8 h with 64% rated thermal burden	Dual bushing intended for L-L connection but may be used L-G provided the terminal voltage rating is not exceeded
2	10–350 kV	All	100%	—	Dual bushing intended for L-L connection but may be used L-G at 58% of rated terminal voltage and thermal burden rating
3	125–2050 kV	Outdoor	110%	Up to 750 kV BIL 173% for 1 min Above 750 kV BIL 140% for 1 min	Single bushing for L-G connection having a tapped secondary for dual ratio. H2 may or may not be isolated but is not fully insulated
4A	60–110 kV	Indoor	110%	125% for 8 h with 64% rated thermal burden	Single bushing for L-G connection. H2 may or may not be isolated but is not fully insulated
4B				—	
5	110–200 kV	Indoor	110%	140% for 1 min	Single bushing for L-G connection. H2 may or may not be isolated but is not fully insulated

www.EngineeringEbooksPdf.com

connection on ungrounded systems to withstand 190% for 30 s to 8 h, depending on ground-fault protection. The IEC standard is much like the Canadian standard with ratings; however they do not classify them by group number, just by the application and condition of the earth connection.

7.3.2 VT Compensation

The high-voltage windings are always compensated to provide the widest range of performance within an accuracy class. Since there is compensation, the actual turns ratio will vary from the rated-voltage ratio. For example, say a 7200:120 V, 60:1 ratio is required to meet 0.3 class. The designer may desire to adjust the primary turns by 0.3% by removing them from the nominal turns, thus reducing the actual turns ratio to, say, 59.82:1. This will position the no-load (zero burden) point to the bottommost part of the parallelogram, as shown in Figure 7.10. Adjustment of turns has little to no effect on the phase-angle error.

7.3.3 Short-Circuit Operation

Under no normal circumstance is the VT secondary to be short-circuited. The VT must be able to withstand mechanical and thermal stresses with its secondary shorted for 1 s with full voltage applied to the primary terminals without suffering damage. In most situations, this condition would cause some protective device to operate and remove the applied voltage, hopefully in less than 1 s. If prolonged, the temperature rise would far exceed the insulation limits, and the axial and radial forces on the windings would cause severe damage to the VT.

7.3.4 VT Connections

VTs are provided in two arrangements: dual or two-bushing type and single-bushing type. Two-bushing types are designed for line-to-line connection, but in most cases, can be connected line-to-ground with reduced output voltage. Single-bushing types are strictly for line-to-ground connection. On an ungrounded system, VTs connected line-to-ground cannot be considered as a grounding transformer, nor shall their secondary windings be connected in a closed-delta. The VT should never be connected to a system that is higher than its rated terminal voltage. As for the connection between phases, polarity must always be observed. Low- and medium-voltage VTs may be configured in delta or wye. As the system voltages exceed 69 kV, only single-bushing types are available. Precautions must be taken when connecting VT primaries in wye on an ungrounded system. (This is discussed further in Section 7.3.5.) Primary fusing is always recommended. Indoor switchgear types are often available with fuse holders mounted directly on the VT body.

7.3.5 Ferroresonance

VTs with wye-connected primaries on three-wire systems that are ungrounded can resonate with the distributed line-to-ground capacitance (see Figure 7.11). Under balanced conditions, line-to-ground voltages are normal. Momentary ground faults or switching surges can upset the balance and raise the line-to-ground voltage above normal. This condition can initiate a resonant oscillation between the primary windings and the system capacitance to ground since they are effectively in parallel with each other. Higher current flows in the primary windings due to fluctuating saturation, which can cause overheating. The current levels may not be high enough to blow the primary fuses, since they are generally sized for short-circuit protection and not thermal protection of the VT. Not every disturbance will cause ferroresonance. This phenomenon depends on several factors:

- Initial state of magnetic flux in the cores
- Saturation characteristics (magnetizing impedance) of the VT
- Air-core inductance of the primary winding
- System circuit capacitance

www.EngineeringEbooksPdf.com

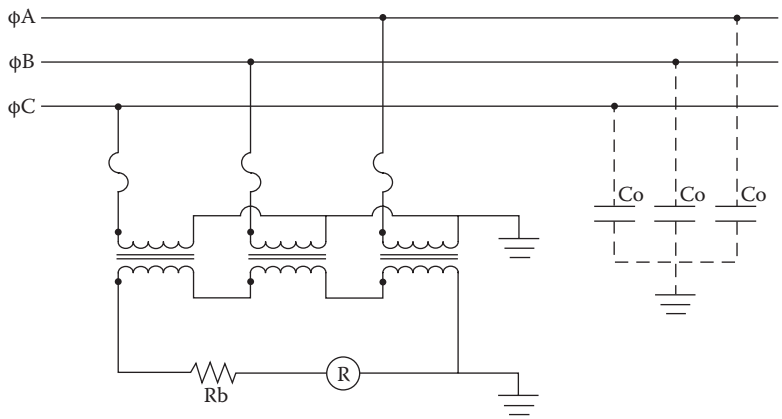

FIGURE 7.11 VTs wye-connected on ungrounded system.

One technique often used to protect the VT is to increase its loading resistance by (1) connecting a resistive load to each of the secondaries individually or (2) connecting the secondaries in a delta-configuration and inserting a load resistance in one corner of the delta. This resistance can be empirically approximated by Equation 7.11,

$$R_{delta} = \frac{(100 \times L_A)}{N^2} \tag{7.11}$$

where

R_{delta} is the loading resistance, ohms
L_A is the VT primary inductance during saturation, millihenrys
N is the VT turns ratio, N_p/N_S

This is not a fix-all solution, as ferroresonance may still occur, but this may reduce the chances of it happening. The loading will have an effect on VT errors and may cause it to exceed 0.3%, but that is not critical for this scheme, since it is seldom used for metering.

7.3.6 VT Construction

The electromagnetic wound-type VT is similar in construction to that of the power transformer. The magnetic circuit is a core-type or shell-type arrangement, with the windings concentrically wound on one leg of the core. A barrier is placed between the primary and secondary winding(s) to provide adequate insulation for its voltage class. In low-voltage applications it is usually a two-winding arrangement, but in medium- and high-voltage transformers, a third (tertiary) winding is often added, isolated from the other windings. This provides more flexibility for using the same VT in metering and protective purposes simultaneously. As mentioned previously, the VT is available in single- or dual-bushing arrangements (Figure 7.12a through c). A single bushing has one lead (H1) accessible for connection to the high-voltage conductor, while the other side of the winding (H2) is grounded. The grounded H2 terminal may be accessible somewhere on the VT body near the base plate. There is usually a grounding strap connected from it to the base, and it can be removed to conduct field PF tests. In this configuration, it is often referred to as an isolated terminal. In service, the strap must always be connected to ground. Some medium-voltage transformers are internally solidly grounded and have no H2 terminal access. The dual-bushing arrangement has two live terminal connections, and both are fully insulated and rated for the voltage to which it is to be connected.

www.EngineeringEbooksPdf.com

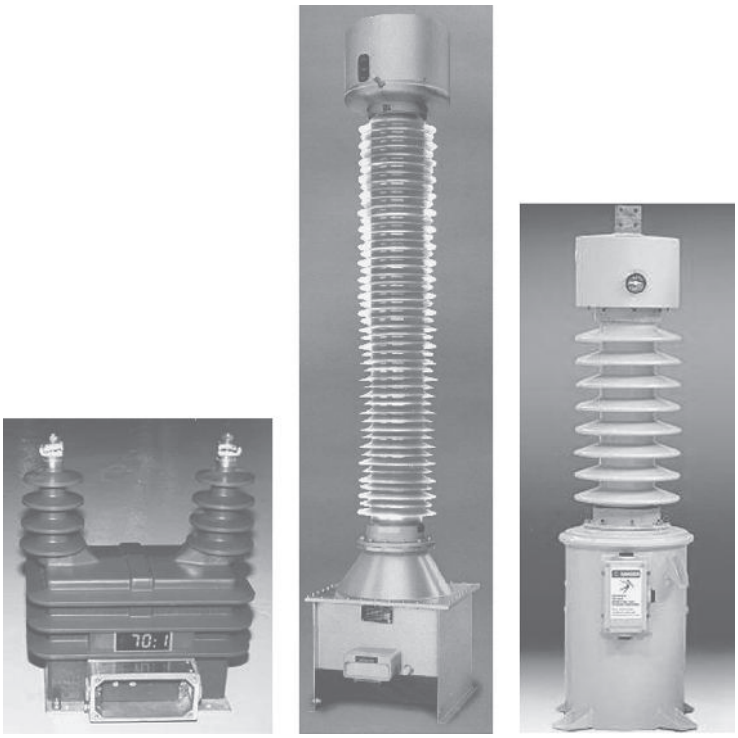

(a) (b) (c)

FIGURE 7.12 (a) 15 kV dual-bushing outdoor VT, (b) 242 kV single-bushing VT, and (c) 69 kV single-bushing VT. (Photos courtesy of Kuhlman Electric Corp.)

7.3.7 Capacitive-Coupled Voltage Transformer

The capacitive-coupled voltage transformer (CCVT) is primarily a capacitance voltage divider and electromagnetic VT combined. Developed in the early 1920s, it was used to couple telephone carrier current with the high-voltage transmission lines. The next decade brought a capacitive tap on many high-voltage bushings, extending its use for indication and relaying. To provide sufficient energy, the divider output had to be relatively high, typically 11 kV. This necessitated the need for an electromagnetic VT to step the voltage down to 120 V. A tuning reactor was used to increase energy transfer (see Figure 7.13). As transmission voltage levels increased, so did the use of CCVTs. Its traditional low

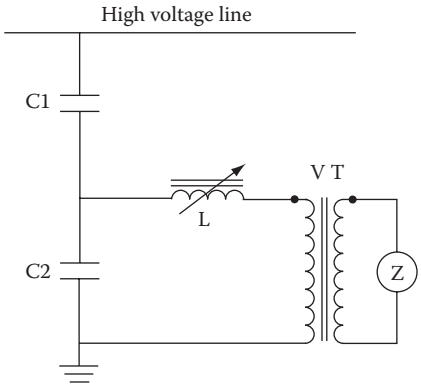

FIGURE 7.13 CCVT simplified circuit.

www.EngineeringEbooksPdf.com

cost versus the conventional VT, and the fact that it was nearly impervious to ferroresonance due to its low flux density, made it an ideal choice. It proved to be quite stable for protective purposes, but it was not adequate for revenue metering. In fact, the accuracy has been known to drift over time and temperature ranges. This would often warrant the need for routine maintenance. CCVTs are commonly used in 345–500 kV systems. Improvements have been made to better stabilize the output, but their popularity has declined.

Another consideration with CCVTs is their transient response. When a fault reduces the line voltage, the secondary output does not respond instantaneously due to the energy-storing elements. The higher the capacitance, the lower is the magnitude of the transient response. Another element is the ferroresonance-suppression circuit, usually on the secondary side of the VT. There are two types, active and passive. Active circuits, which also contain energy-storing components, add to the transient. Passive circuits have little effect on transients. The concern of the transient response is with distance relaying and high-speed line protection. This transient may cause out-of-zone tripping, which is not tolerable.

7.4 Current Transformer

The current transformer is often treated as a "black box." It is a transformer that is governed by the laws of electromagnetic induction:

$$\varepsilon = k\beta A_C N f \tag{7.12}$$

where

- ε is the induced voltage
- β is the flux density
- A_C is the core cross-sectional area
- N is the turns
- f is the frequency
- k is the constant of proportionality

As previously stated, the CT is connected in series with the circuit to be monitored, and it is this difference that leads to its ambiguous description. Under normal operating conditions, the CT monitors changes in system load current. As the load current varies, so does the CT's operating flux density. The primary winding is to offer a constant-current source of supply through a low-impedance loop. Because of this low impedance, current passes through it with very little regulation. The CT operates on the ampere-turn principle (Faraday's law): primary ampere-turns = secondary ampere-turns, or

$$I_P N_P = I_S N_S \tag{7.13}$$

Since there is energy loss during transformation, this loss can be expressed in ampere-turns: primary ampere-turns − magnetizing ampere-turns = secondary ampere-turns, or

$$I_P N_P - I_{ex} N_P = I_S N_S \tag{7.14}$$

The CT is not voltage dependent, but it is voltage limited. As current passes through an impedance, a voltage is developed (Ohm's law, $V = I \times Z$). As this occurs, energy is depleted from the primary supply, thus acting like a shunt. This depletion of energy results in the CT errors. As the secondary current and/or impedance increases, the voltage proportionally increases. Thus the limit of the CT is magnetic saturation, a condition when the core flux can no longer support the increased voltage demand. At this point, nearly all of the available energy is going into the core, leaving none to support the secondary circuit.

www.EngineeringEbooksPdf.com

7.4.1 Saturation Curve

The saturation curve, often called the secondary excitation curve, is a plot of secondary exciting voltage versus secondary exciting current drawn on log-log paper. The units are in rms with the understanding that the applied voltage is sinusoidal. This characteristic defines the core properties after the stress-relief annealing process. It can be demonstrated by test that cores processed in the same manner will always follow this characteristic within the specified tolerances. Figure 7.14 shows a typical characteristic of a 600:5 multiratio CT. The knee point is indicated by the dashed line. Since the voltage is proportional to the turns, the volts-per-turn at the knee is constant. The tolerances are 95% of saturation voltage for any exciting current above the knee point and 125% of exciting current for any voltage below the knee point. These tolerances, however, can create a discontinuity about the knee of the curve, which is illustrated in Figure 7.14. Since the tolerance is referenced at the knee point, it is possible to have a characteristic that is shifted to the right of the nominal, within tolerance below the knee point. But careful inspection shows that a portion of the characteristic will exceed the tolerance above the knee point. Some manufacturers will provide actual test data that may provide the relay engineer with more useful information. Knowing the secondary-winding resistance and the excitation characteristic, the user can calculate the expected RCF under various conditions. Using this type of curve is only valid for nonmetering applications. The required voltage needed from the CT must be calculated using the total circuit impedance and the anticipated secondary current level. The corresponding exciting current is read from the curve and used to approximate the anticipated errors:

$$V_{ex} = I_{Sf} Z_T = I_{Sf}\sqrt{(R_s + R_B)^2 + X_B^2} \tag{7.15}$$

$$RCF = \frac{(I_{Sf} + I_{ex})}{I_{Sf}} \tag{7.16}$$

$$\%RE = \frac{I_{ex}}{I_{Sf}} \times 100 \tag{7.17}$$

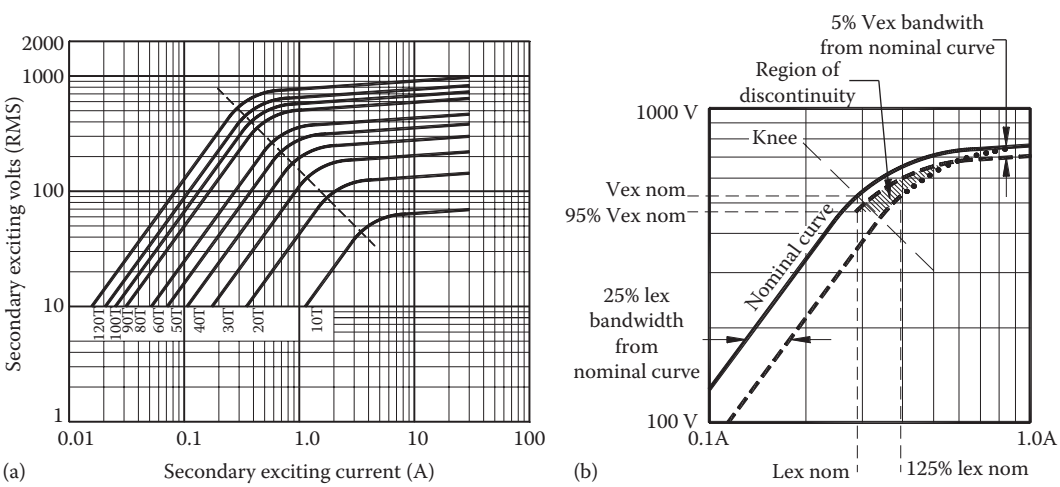

FIGURE 7.14 (a) Saturation curve for a multiratio CT and (b) saturation curve discontinuity of tolerances.

www.EngineeringEbooksPdf.com

where

V_{ex} is the secondary excitation voltage required at fault level
I_{Sf} is the secondary fault current (primary fault current/turns ratio)
I_{ex} is the secondary exciting current at V_{ex}, obtained from curve
Z_T is the total circuit impedance, ohms
R_s is the secondary-winding resistance, ohms
R_B is the secondary burden resistance, ohms
X_B is the secondary burden reactance, ohms
RCF is the ratio correction factor
RE is the ratio error

In the world of protection, the best situation is to avoid saturation entirely. This can be achieved by sizing the CT knee-point voltage to be greater than V_{ex}, but this may not be the most practical approach. This could force the CT physical size to substantially increase as well as cause dielectric issues. There must be some reasonable trade-offs to reach a desirable condition. Equation 7.15 provides the voltage necessary to avoid ac (alternating current) saturation. If there is an offset that will introduce a dc (direct current) component, then the system X/R ratio must be factored in

$$V_{ex} = I_{Sf} Z_T \left[1 + \left(\frac{X}{R} \right) \right] \tag{7.18}$$

And if the secondary burden is inductive, Equation 7.18 is rewritten as

$$V_{ex} = I_{Sf} Z_T \left\{ 1 + \left[\frac{(X/R)(R_S + R_B)}{Z_T} \right] \right\} \tag{7.19}$$

The saturation factor, K_S, is the ratio of the knee-point voltage to the required secondary voltage V_{ex}. It is an index of how close to saturation a CT will be in a given application. K_S is used to calculate the time a CT will saturate under certain conditions:

$$T_S = -\frac{X}{\omega R} \ln \left[1 - \frac{K_S - (1/x)}{R} \right] \tag{7.20}$$

where

T_S is the time to saturate
$\omega = 2\pi f$, where f is the system frequency
K_S is the saturation factor (V_k/V_{ex})
R is the primary system resistance at point of fault
X is the primary system reactance at point of fault
ln is the natural log function

7.4.2 CT Rating Factor

The continuous-current rating factor is given at a reference ambient temperature, usually 30°C. The standard convention is that the average temperature rise will not exceed 55°C for general-purpose use, but it can be any rise shown in Tables 7.9 and 7.10. From this rating factor, a given CT can be derated for use in higher ambient temperatures from the following relationship:

$$\frac{RF_{NEW}^2}{RF_{STD}^2} = \frac{85^\circ C - AMB_{NEW}}{85^\circ C - 30^\circ C} \tag{7.21}$$

www.EngineeringEbooksPdf.com

which can be simplified and rewritten as

$$RF_{NEW} = RF_{STD}\sqrt{\frac{85^\circ C - AMB_{NEW}}{55^\circ C}} \tag{7.22}$$

where

RF_{NEW} is the desired rating factor at some other ambient temperature
RF_{STD} is the reference rating factor at 30°C
AMB_{NEW} is the desired ambient temperature <85°C

Equation 7.22 is valid only for 55°C rise ratings and maximum ambient less than 85°C.

The rating factor ensures that the CT will not exceed its insulation-class rating. This expression follows the loading curves of Figure 1 in IEEE C57.13 (see Figure 7.15). It assumes that the average winding-temperature rise is proportional to the current squared and that core watt losses are insignificant under continuous operating conditions.

Conversely, this expression will work for ambient temperatures lower than 30°C, but in this situation, the rating factor will be higher. The concern is not with exceeding the insulation system but, rather, with the chance of increasing the errors of the CT accuracy limits. A number of factors can affect this, such as core material and compensation methods used. It is best to consult the manufacturer for overrating performances.

Another consideration is the stated rating factor versus the actual temperature rise. In most cases, the stated rating factor may be quite less than the permitted 55°C rise allowance. For example, the actual rating factor may be 2.67, but the stated rating factor is 2.0. If the actual rise data were known, then Equation 7.22 could be rewritten as

$$RF_{NEW} = RF_{ACTUAL}\sqrt{\frac{85^\circ C - AMB_{NEW}}{\Delta T_{RISE}}} \tag{7.23}$$

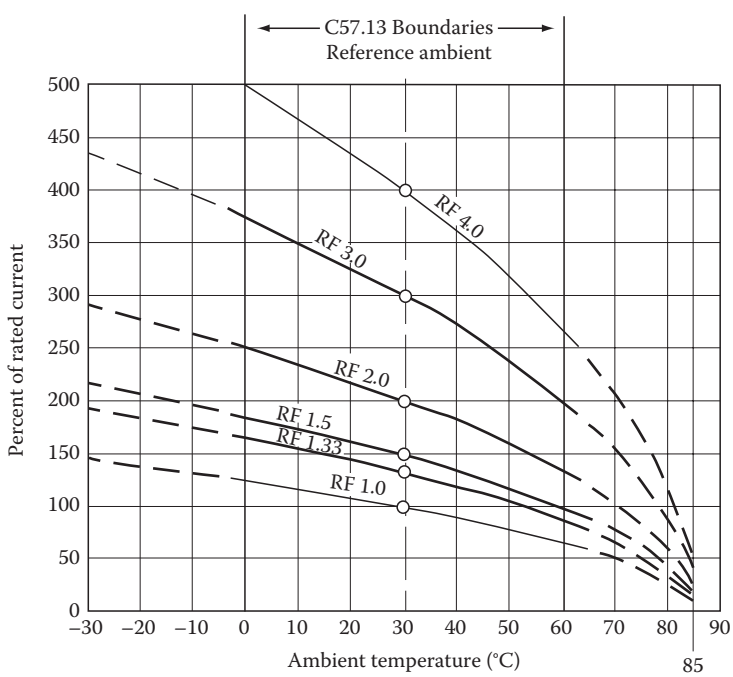

FIGURE 7.15 CT derating chart.

www.EngineeringEbooksPdf.com

where

RF_{ACTUAL} is the rating factor at actual temperature rise
ΔT_{RISE} is the actual measured temperature rise

This may be more useful when operating a CT at higher ambient, where there is a need for the maximum rating factor. For example, if the CT has an actual rating of 2.67 based on temperature-rise data but is only rated 2.0, and if it is desired to use the CT at 50°C ambient with the stated rating factor 2.0, then this unit should work within its insulation rating and within its stated accuracy class.

If a higher-temperature-class insulation system is provided, then the rise must be in compliance with that class per Tables 7.9 and 7.10. In some cases, the temperature class is selected for the environment rather than the actual temperature rise of the CT.

7.4.3 Open-Circuit Conditions

The CT functions best with the minimum burden possible, which would be its own internal impedance. This can only be accomplished by applying a short circuit across the secondary terminals. Since the core mmf acts like a shunt, with no load connected to its secondary, the mmf becomes the primary current, thus driving the CT into hard saturation. With no load on the secondary to control the voltage, the winding develops an extremely high peak voltage. This voltage can be in the thousands, or even tens of thousands, of volts. This situation puts the winding under incredible stress, ultimately leading to failure. This could result in damage to other equipment and fire and present a hazard to personnel. It is for this reason that the secondary circuit should never be open. It must always have a load connected. If it is installed to the primary but not in use, then the secondary terminals should be shorted until it is to be used. Most manufacturers ship CTs with a shorting strap or wire across the secondary terminals. The CT winding must be able to withstand 3500 V_{peak} for 1 min under open-circuit conditions. In many cases, the voltage is reached long before the rated primary current. If at nominal operating current the voltage can exceed this level, then it is recommended that overvoltage protection be used.

7.4.4 Overvoltage Protection

Under load, the CT voltage is limited. The level of this voltage depends on the turns and core cross-sectional area. The user must evaluate the limits of the burdens connected to ensure equipment safety. Sometimes protective devices are used on the secondary side to maintain safe levels of voltage. These devices are also incorporated to protect the CT during an open-circuit condition. In metering applications, it is possible for such a device to introduce a dc across the winding that could saturate the core or leave it in some state of residual flux. In high-voltage equipment, arrestors may be used to protect the primary winding from high voltage spikes produced by switching transients or lightning.

7.4.5 Residual Magnetism

Residual magnetism, residual flux, or remanence refers to the amount of stored or trapped flux in the core. This can be introduced during heavy saturation or with the presence of some dc component. Figure 7.16 shows a typical B-H curve for silicon-iron driven into hard saturation. The point at which the curve crosses zero force, identified by $+B_{res}$, represents the residual flux. If at some point the CT is disconnected from the source, this flux will remain in the magnetic core until another source becomes present. If a fault current drove the CT into saturation, when the supply current resumed normal levels, the core would contain some residual component. Residual flux does not gradually decay but remains constant once steady-state equilibrium has been reached. Under normal conditions, the minor B-H loop must be high enough to remove the residual component. If it is not, then it will remain present until another fault occurrence takes place. The effective result could be a reduction of the saturation flux.

www.EngineeringEbooksPdf.com

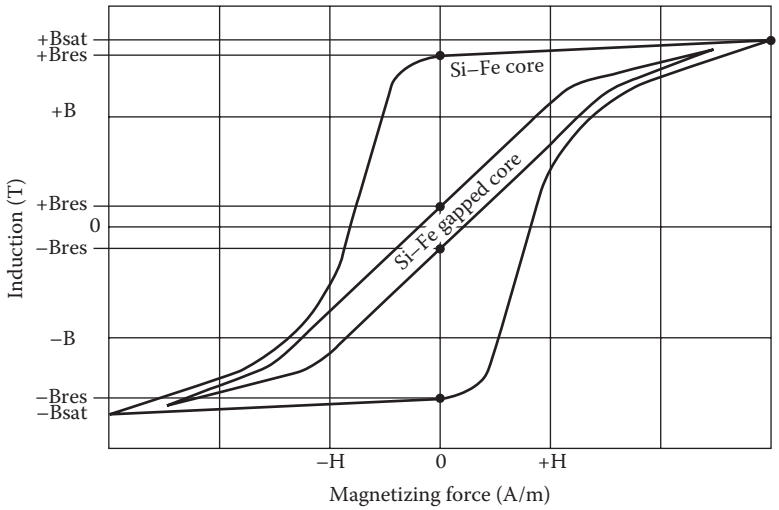

FIGURE 7.16 Typical B-H curve for Si-Fe steel.

However, if a transient of opposite polarity occurs, saturation is reduced with the assistance of the residual. Conversely, the magnitude of residual is also based on the polarity of the transient and the phase relationship of the flux and current. Whatever the outcome, the result could cause a delayed response to the connected relay.

It has been observed that in a tape-wound toroidal core, as much as 85% of saturation flux could be left in the core as residual component. The best way to remove residual flux is to demagnetize the core. This is not always practical. The user could select a CT with a relay class that is twice that required. This may not eliminate residual flux, but it will certainly reduce the magnitude. The use of hot-rolled steel may inherently reduce the residual component to 40%–50% of saturation flux. Another way of reducing residual magnetism is to use an air-gapped core. Normally, the introduction of a gap that is, say, 0.01% of core circumference could limit the residual flux to about 10% of the saturation flux. Referring to Figure 7.16, a typical B-H loop for an air-gapped core is shown. The drawback is significantly higher exciting current and lower saturation levels, as can be seen in Figure 7.3. To overcome the high exciting current, the core would be made larger. That—coupled with the gap—would increase its overall cost. This type of core construction is often referred to as a linearized core. Though not commonly used in the United States, they are widely used in the rest of the world when transient performance is of concern.

7.4.6 CT Connections

As previously mentioned, some devices are sensitive to the direction of current flow. It is often critical in three-phase schemes to maintain proper phase shifting. Residually connected CTs in three-phase ground-fault scheme (Figure 7.17a) sum to 0 when the phases are balanced. Reversed polarity of a CT could cause a ground-fault relay to trip under a normal balanced condition. Another scheme to detect zero-sequence faults uses one CT, often referred to as a core balance CT, to simultaneously monitor all leads and neutral (Figure 7.17c). In differential protection schemes (Figure 7.17b), current-source phase and magnitude are compared. Reverse polarity of a CT could effectively double the phase current flowing into the relay, thus causing a nuisance tripping of a relay. When two CTs are driving a three-phase ammeter through a switch, a reversed CT could show 1.73 times the monitored current flowing in the unmonitored circuit.

The wye-connected secondary circuit is the most commonly used. The CT will reproduce positive-, negative-, and zero-sequence elements as they occur in the primary circuit. In the delta-connected secondary, the zero-sequence components are filtered and left to circulate in the delta. This is a common

www.EngineeringEbooksPdf.com

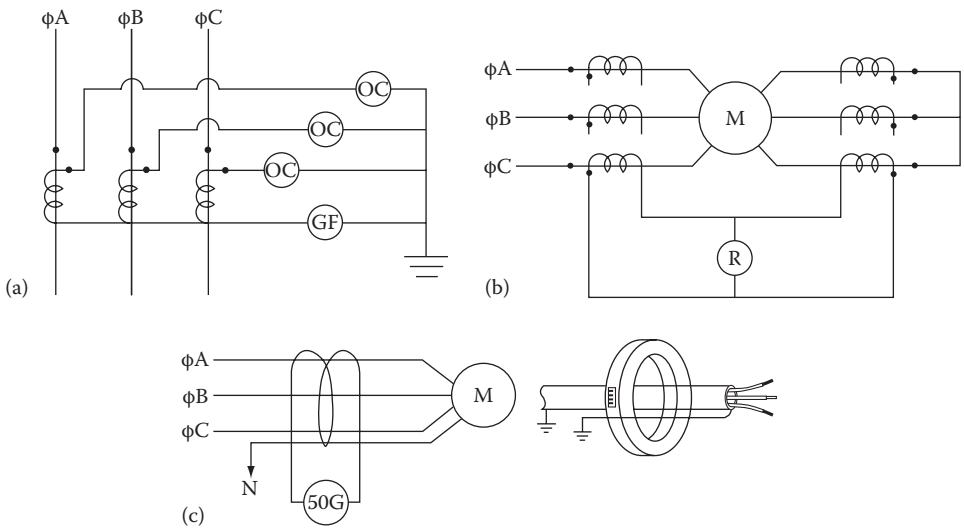

FIGURE 7.17 (a) Overcurrent and ground-fault protection scheme. (b) Differential protection scheme. (c) Zero-sequence scheme with all three-phase leads going through the window of the CT. This connection, as well as the residual connection in Figure 7.17a, will cancel out the positive- and negative-sequence currents leaving only the zero-sequence current to the 50G device. Sometimes the ground or neutral lead will be included. The diagram on the right shows sheathed cable. It is important that one ground point go back through the window to avoid the possibility of a shorted electrical turn via the ground path.

scheme for differential protection of delta-wye transformer. A general rule of thumb is to connect the CT secondaries in wye when they are on the delta winding of a transformer and, conversely, connect the secondaries in delta when they are on the wye winding of the transformer. See Table 7.12.

7.4.7 CT Construction

There are four major types of CTs: window-type CT, which includes bushing-type (BCT); bar-type CT; split-core-type CT; and wound-type CT, the latter having both a primary and secondary winding. There is ongoing development and limited use of optical-type current transducers (OCT), which rely on the principles of light deflection.

7.4.7.1 Window-Type CT

The window-type CT is the simplest form of instrument transformer. It is considered to be an incomplete transformer assembly, since it consists only of a secondary winding wound on its core. The most

TABLE 7.12 Total Burden on CT in Fault Conditions

CT Secondary Connections	Three-Phase or Ph-to-Ph Fault	Phase-to-GND Fault
Wye-connected at CT	$R_S + R_L + Z_R$	$R_S + 2R_L + Z_R$
Wye-connected at switchboard	$R_S + 2R_L + Z_R$	$R_S + 2R_L + Z_R$
Delta-connected at CT	$R_S + 2R_L + 3Z_R$	$R_S + 2R_L + 2Z_R$
Delta-connected at switchboard	$R_S + 3R_L + 3Z_R$	$R_S + 2R_L + 2Z_R$

Note: R_S = CT secondary-winding resistance + CT lead resistance, ohms; R_L = one-way circuit lead resistance, ohms; Z_R = relay impedance in secondary current path, ohms.

www.EngineeringEbooksPdf.com

common type is that wound on a toroidal core. The secondary winding is fully distributed around the periphery of the core. In special cases when taps are employed, they are distributed such that any connection made would utilize the entire core periphery. Windings in this manner ensure optimum flux linkage and distribution. Coupling is almost impervious to primary-conductor position, provided that the return path is sufficiently distanced from the outer periphery of the secondary winding (see Figure 7.5a). The effects of stray flux are negligible, thus making this type of winding a low-reactance design. The primary winding in most cases is a single conductor centrally located in the window. A common application is to position the CT over a high-voltage bushing, hence the name BCT. Nearly all window-type CTs manufactured today are rated 600 V class. In practice, they are intended to be used over insulated conductors when the conductor voltage exceeds 600 V. It is common practice to utilize a 600 V class window type in conjunction with air space between the window and the conductor on higher-voltage systems. Such use may be seen in isolated-phase bus compartments. There are some window types that can be rated for higher voltages as stand-alone units, for use with an integral high-voltage stress shield, or for use with an insulating sleeve or tube made of porcelain or some polymeric material. Window-type CTs generally have a round window opening but are also available with rectangular and oval openings. This is sometimes provided to fit a specific bus arrangement found in the rear of switchgear panels or on drawout-type circuit breakers. This type of CT is used for general-purpose monitoring, revenue metering and billing, and protective relaying (Figure 7.18).

7.4.7.2 Bar-Type CT

The bar-type CT is, for all practical purposes, a window-type CT with a primary bar inserted straight through the window (Figure 7.19). This bar assembly can be permanently attached or held in place with brackets. Either way, the primary conductor is a single turn through the window, fully insulated from the secondary winding. The bar must be sized to handle the continuous current to be passed through it, and it must be mechanically secured to handle high-level short-circuit currents without incurring damage. Uses are the same as the window type.

7.4.7.3 Split-Core Type

The split-core type CT is a special case of window-type CT. Its winding and core construction is such that it can hinge open, or totally separate into two parts (Figure 7.20). This arrangement is ideal to use in cases where the primary conductor cannot be opened or broken. However, because of this cut, the winding is not fully distributed (see Figure 7.5b). Often only 50% of the effective magnetic path is used. The use of this type should be with discretion since this construction results in higher-than-normal errors. There is also some uncertainty in repeatability of performance from installation to installation. The reassembly of the core halves is critical. It is best suited for general-purpose monitoring and temporary installations.

7.4.7.4 Wound-Type CT

The wound-type CT has a primary winding that is fully insulated from the secondary winding. Both windings are permanently assembled on the core (Figure 7.5c and d). The insulation medium used—whether polymeric, oil, or even air—in conjunction with its rated voltage class dictates the core and coil construction. There are several core types used, from a low-reactance toroid to high-reactance cut cores and laminations. The distribution of the cut(s) and gap(s) helps control the magnetizing losses. The manner in which the windings are arranged on the core affects the reactance since it is a geometric function. Generally, the windings do not utilize the magnetic path efficiently. The proper combination of core type and coil arrangement can greatly reduce the total reactance, thus reducing errors (Figures 7.21 and 7.22).

The auxiliary CT is a wound type (see Figure 7.5d) used in secondary circuits for totalizing, summation, phase shifting, isolation, or changing ratio. They are typically 600 V class (Figure 7.23) since they are used in the low-voltage circuit. When applying auxiliary CTs, the user must be aware of its reflected impedance on the mainline CT.

www.EngineeringEbooksPdf.com

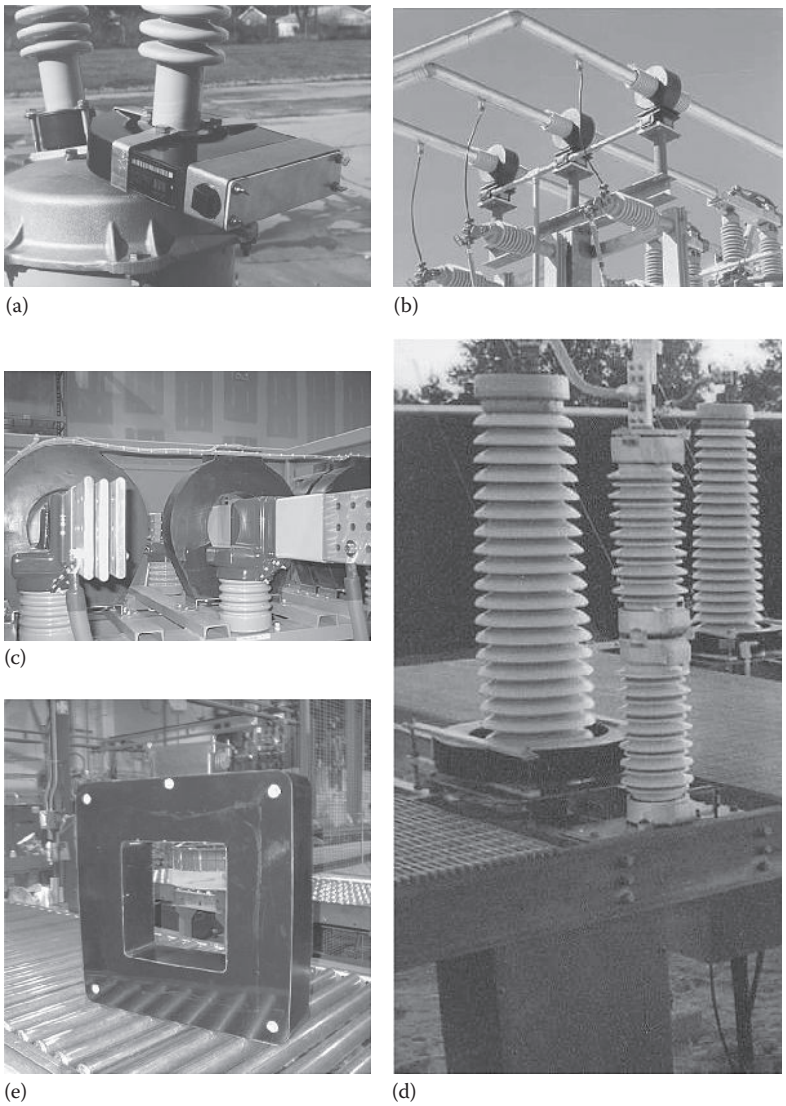

FIGURE 7.18 (a) Small 600 V class window-type CT mounted over a bushing on a 15 kV recloser. (b) 15 kV class window-type CTs with porcelain sleeve mounted on substation structure. (c) 600 V class window-type CTs mounted over a 15 kV bus inside a metal enclosure. (d) Large 600 V class window-type CT (slipover) mounted over a high-voltage bushing. (e) 8.7 kV class window-type CT with rectangular opening. (Photos courtesy of Kuhlman Electric Corp.)

7.4.8 Proximity Effects

Current flowing in a conductor will induce magnetic flux through the air. This flux is inversely proportional to the distance squared, $B \propto 1/d^2$. As current increases, the flux increases. Considering the case in a three-phase bus compartment, each bus is equally spaced from the other. If CTs are mounted on each phase, then it is possible that the flux from adjacent conductor fields link to the adjacent CTs. Often, the distance is sufficient that stray flux linkage is almost negligible. But at higher current levels, it can cause problems, especially in differential protection schemes. This stray flux can cause localized saturation in segments of the core, and this saturation can cause heating in the winding and increase the CT errors.

www.EngineeringEbooksPdf.com

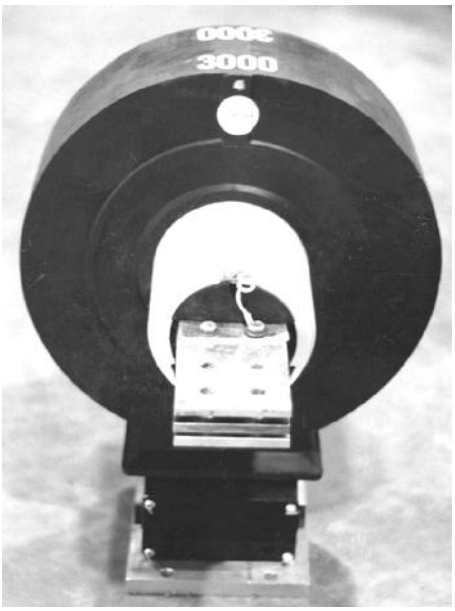

FIGURE 7.19 Bar-type CT. (Photo courtesy of Kuhlman Electric Corp.)

FIGURE 7.20 Split-core type CT with secondary winding on three legs of core. (Photo courtesy of Kuhlman Electric Corp.)

This same effect can be seen when return paths are also in close proximity to a CT. In the case of drawout circuit breakers rated 2000 A and above, the phase distances and return paths are close together, causing problems with CTs mounted on the stabs. Sometimes magnetic shunts or special winding arrangements are incorporated to offset the effects. Another concern is with CTs mounted over large generator bushings. The distances are typically adequate for normal operation, but overcurrent situations may lead to misoperation of protective devices. Consequently, CTs used in this application rated above 6000 A are shielded. The shield can be external, such as cast-aluminum or cast-copper housings. These housings are of large cross section. In the presence of high stray-flux fields, large eddy currents flow in the housings, producing high temperatures. The shield can also be internal as an integral part of the secondary winding. This technique eliminates the eddy-current problems. Both techniques are effective in protecting the core from stray flux, but neither will make it immune from it.

www.EngineeringEbooksPdf.com

FIGURE 7.21 15 kV wound-type CT cast in epoxy resin. (Photo courtesy of Kuhlman Electric Corp.)

FIGURE 7.22 High-voltage wound-type CT in combination steel tank, oil, and porcelain construction. (Photo courtesy of Kuhlman Electric Corp.)

www.EngineeringEbooksPdf.com

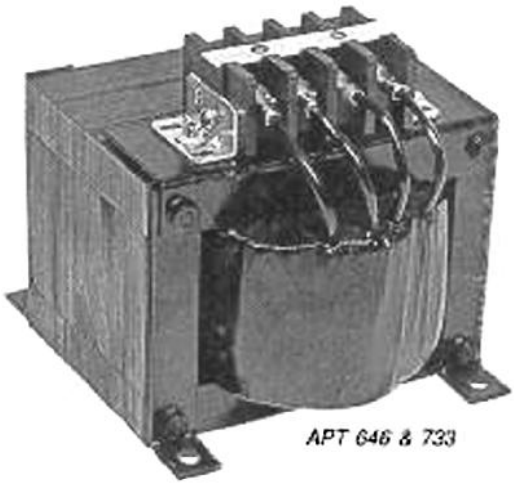

FIGURE 7.23 600 V, indoor-class auxiliary CT frame shell-type laminated "EI" core. (Photo courtesy of Kuhlman Electric Corp.)

7.4.9 Linear Coupler

The linear coupler (LC) is a CT that utilizes a nonmagnetic core, for example, wood, plastic, or paper, which acts only as a form for the winding. It is typically a window-type construction. With an air core, the magnetizing components of error have been removed, thus offering linear response and no possibility of saturation. They do not produce secondary currents that would be provided by an ideal CT. If the magnetizing impedance approached infinity, the secondary current would approach the ideal, $i_S = -i_P\ (N_P/N_S)$, as seen in Figure 7.24. The low permeability of the core prevents a high-magnetizing inductance, thus providing considerable divergence of performance from that of a conventional CT. Consequently, protective equipment must be designed to present essentially infinite impedance to the LC and operate as mutual inductors. Closely matching the LC impedance will provide maximum power transfer to the device. LC outputs are typically defined by V_S/I_P, for example, 5 V/1000 A. Since the load is high impedance, the LC can be safely open-circuited, unlike the conventional iron-core CT.

Because coupling is important and there is no iron to direct the flux, the window size is made as small as possible to accommodate the primary conductor. Positioning is critical, and the return conductor and adjacent phases must be far enough away from the outer diameter of the LC so that stray flux is not introduced into the winding.

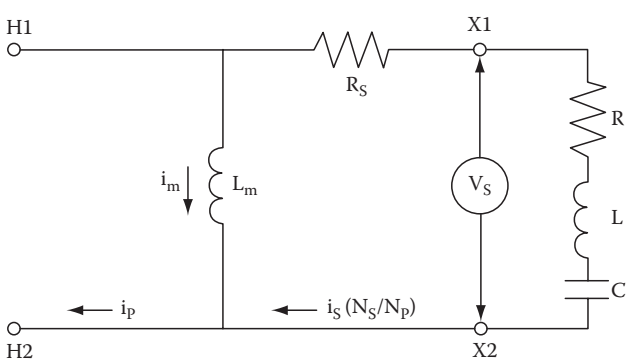

FIGURE 7.24 LC equivalent circuit.

www.EngineeringEbooksPdf.com

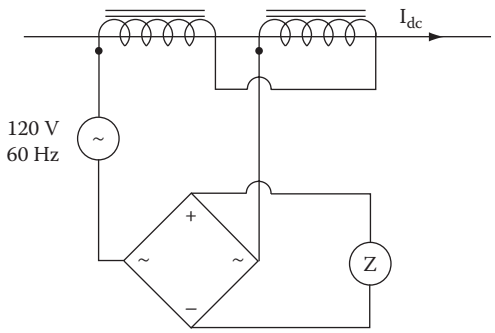

FIGURE 7.25 Standard two-element connection.

7.4.10 Direct-Current Transformer

The basic direct-current transformer (DCT) utilizes two coils, referred to as elements, that require external ac excitation (Figure 7.25). The elements are window-type CTs that fit over the dc bus. The elements are connected in opposition such that the instantaneous ac polarity of one is always in opposition to the other. The ac flux in one element opposes the dc flux in the primary bus and desaturates the core, while in the other element, the ac flux aids the dc flux and further saturates the core. This cycle is repeated during the other (opposite polarity) half of the ac cycle. The need to rectify is due to the square-wave output. The direction of current flow in the primary is not important.

Proximity of the return conductor may have an effect on accuracy due to local saturation. For best results, all external influences should be kept to a minimum.

The output waveform contains a commutation notch at each half cycle of the applied exciting voltage. These notches contribute to the errors and can interfere with the operation of fast-acting devices. Ideally, the core material should have a square B-H characteristic, which will minimize the notches. There are several connection schemes that can eliminate the notches but will increase the overall cost.

A simple approach could be the three-element connection (Figure 7.26), where the third element acts as a smoothing choke to the notches. This also increases overall frequency response by providing ac coupling between the primary and the output circuits.

Finally, there is the Hall-effect device. This solid-state chip is inserted into the gap of an iron core whose area is much larger than the device itself. The core has no secondary winding. The Hall effect requires a low-voltage dc source to power and provides an output proportional to the dc primary current and the flux linked to the core and gap.

7.4.11 Slipover CT Installations

CTs are often installed on existing systems as power requirements increase. One of the most common retrofit installations is the application of a window-type or external slipover CT, which is mounted over

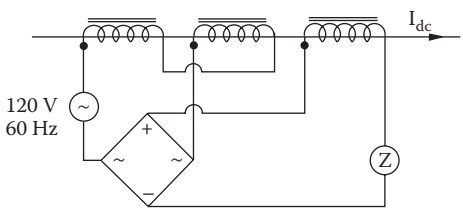

FIGURE 7.26 Three-element connection.

www.EngineeringEbooksPdf.com

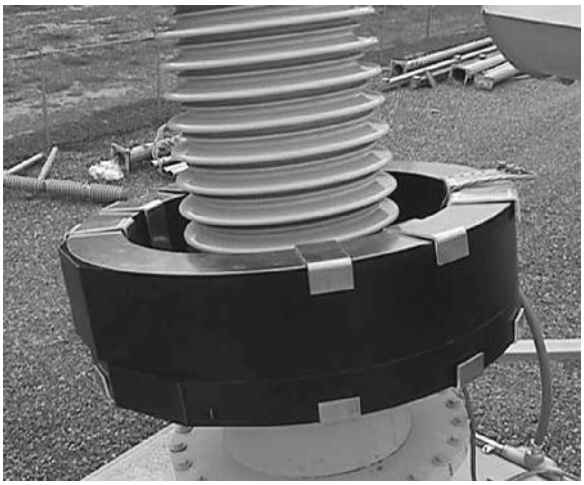

FIGURE 7.27 600 V class slipover CT installed on high-voltage bushing with ground shield. Note the ground lead going back through the CT window to avoid shorted electrical turn. (Photo courtesy of Kuhlman Electric Corp.)

the high-voltage bushing of a power transformer or circuit breaker (Figure 7.27). To maintain the integrity of the insulation system, adequate strike clearances must be observed. It is also important to protect the CT from a high-voltage flashover to ground. This can be done by placing the CT below the ground plane or bushing flange. When using an external slipover CT, a ground shield can be placed on top of the unit and connected to ground. When grounding the shield, it is important that the lead is routed such that it does not make a shorted electrical turn around the CT.

A slipover, when used internally, is called a bushing CT or BCT. Its insulation is not suitable for direct outdoor use and requires protection from the weather. In high-voltage switchgear, BCTs are fitted over the high-voltage bushing in a similar manner as described earlier, but they are enclosed inside a metallic cover that protects them from the weather while providing a ground shield (Figure 7.28). The BCT can also be inside the apparatus, mounted off of the high-voltage bushing, either above or submerged in the oil. Either way, special materials must be used for exposure to oil.

FIGURE 7.28 High-voltage circuit breaker with BCTs mounted underneath a metallic cover. (Photo courtesy of Kuhlman Electric Corp.)

www.EngineeringEbooksPdf.com

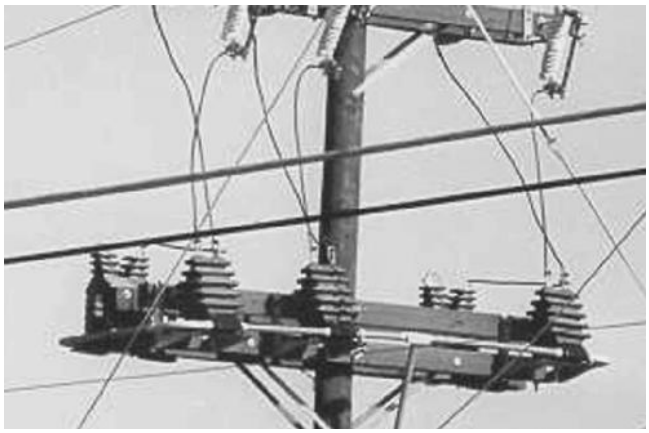

FIGURE 7.29 15 kV three-phase/four-wire metering rack with three VTs and three CTs. (Photo courtesy of Kuhlman Electric Corp.)

7.5 Combination Metering Units

The last major assembly is the combination metering unit, which consists of a single VT and a single CT element within one common housing. These are typically available in 15 kV class and up. In most cases, this is more economical than using single-housed elements and can save space. With two primary terminals, it mimics the conventional wound-type CT, thus simplifying the installation. The H1 (line) terminal is a common junction point for both the CT and VT elements. The H2 (load) terminal completes the current loop. The VT element is connected from the H1 terminal to ground. All secondary terminals are isolated and located inside the secondary-terminal box.

Optical metering units are available for use in high-voltage substations. They utilize the same principles as previously discussed, with the current and voltage transducers housed in a common structure.

7.5.1 Primary Metering Units

Primary metering units are single CT and VT elements assembled on a common bracket for pole-mounted installations or inside a pad-mount compartment for ground installations. They are typically molded products, 5–34.5 kV (Figure 7.29), but they are also available in oil-filled units (Figure 7.30). It is a prewired assembly with all of the elements' secondary leads connected to a common junction box for easy access. The elements can be in any combination needed to provide accurate energy measurement. For three-phase/four-wire installations, use either 2 ½- or 3-element arrangements, and for three-phase/three-wire installations, use 2-element arrangements. There are even single-phase assemblies available for special applications.

When measuring energy usage for the purposes of revenue billing, and knowing the RCF and phase angle readings of each element, the watts or watt-hours can be corrected by multiplying the reading by the product of $[TCF_{CT}][TCF_{VT}]$.

7.6 Optical Transducers

A relatively new technology, development actually began in the late 1970s by Westinghouse. It wasn't until May 1986 when the first working unit was put into service in the United States, a 161 kV optical current sensor by TVA used for single phase metering. It was paralleled with a conventional CT to compare results over time. After 1 year in service and a performance that far exceeded expectations, it proved its worthiness for continuing development. Soon to follow was an optical voltage sensor. Increased interest grew, other manufacturers emerged, and optical fiber and signal processing technologies expanded

www.EngineeringEbooksPdf.com

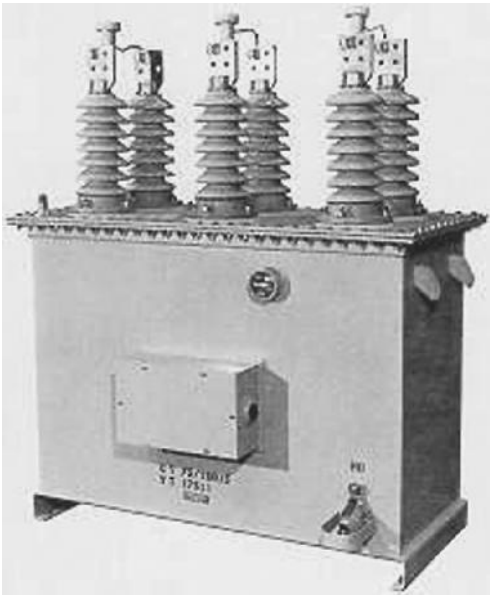

FIGURE 7.30 34.5 kV three-phase oil-filled metering unit. (Photo courtesy of Kuhlman Electric Corp.)

and improved. They are making their mark in 138 kV and higher-voltage systems, in both ac and dc transmission lines.

There are three major elements: (1) the HV structure which holds the optical sensing head, (2) the optical modulator and sensor electronics which drive the light source and process the signals, and (3) the cabling system which is fiber-optic. The absence of a steel core makes them impervious to the effects of saturation and stray adjacent fields and also allows for high accuracy over a very wide dynamic range. They are lighter in weight than their conventional iron-core counterparts but must meet the same dielectric withstands and impulse levels. With no copper windings they offer a higher degree of isolation. They must have a constant and reliable light source and a means to detect the absence of this light source. The connection to and from the device to the control panel is via fiber-optic cables.

Over the last few years with much R&D and field experience using these nonconventional transformers, IEEE has moved forward in developing standards that define testing and qualification of these products in protection and revenue metering applications, and address the digital and analog output of these devices.

7.6.1 Optical Current Sensors

Current sensing works on the principle known as the Faraday effect, by which a polarized light beam, passing around a current-carrying conductor, deflects in the presence of magnetic fields. The angular deflection is proportional to the length of path through the dielectric medium, the magnetic field strength, and the cosine of the angle between the direction of the light beam and the direction of the magnetic field. This angle of deflection, measured optically, is converted to an electrical signal that is proportional to the current flowing in the primary conductor.

7.6.2 Optical Voltage Transducer

Voltage sensing works on the principles known as the Kerr effect or the Pockels effect. Both effects depend on the birefringence, or splitting of a light ray into two independent light rays and evaluating them in the presence of an electric field. The Kerr effect is quadratic, whereas the Pockels effect is directly proportional to the field.

www.EngineeringEbooksPdf.com

Bibliography

Burke, H.E., *Handbook of Magnetic Phenomena*, Van Nostrand Reinhold, New York, 1986.

Cease, T.W., Optical sensing technology passes field tests, *Electrical World*, September, s44–s46, 1990.

Cosse, R.E., Jr. et al., Eds., The practice of ground differential relaying, *IAS Trans*., 30, 1472–1479, 1994.

Funk, D.G. and Beaty, H.W., *Standard Handbook for Electrical Engineers*, 12th edn., McGraw-Hill, New York, 1987.

Hague, B., *Instrument Transformers, Their Theory, Characteristics, and Testing*, Sir Isaac Pitman & Sons, London, U.K., 1936.

Hou, D. and Roberts, J., Capacitive voltage transformer transient overreach concerns and solutions for distance relaying, presented at *50th Annual Georgia Tech. Protective Relaying Conference*, Atlanta, GA, 1996.

IEEE, *Guide for Protective Relay Applications to Power System Buses*, C37.97–1979, Institute of Electrical and Electronics Engineers, Piscataway, NJ, 1979.

IEEE, *Guide for Protection of Shunt Capacitor Banks*, C37.99–1980, Institute of Electrical and Electronics Engineers, Piscataway, NJ, 1980.

IEEE, *Guide for Generator Ground Protection*, C37.101–1985, Institute of Electrical and Electronics Engineers, Piscataway, NJ, 1985.

IEEE, *Guide for AC Generator Protection*, C37.102–1985, Institute of Electrical and Electronics Engineers, Piscataway, NJ, 1985.

IEEE, *Guide for Protective Relay Applications to Power Transformers*, C37.91–1985, Institute of Electrical and Electronics Engineers, Piscataway, NJ, 1985.

IEEE, *Guide for AC Motor Protection*, C37.96–1988, Institute of Electrical and Electronics Engineers, Piscataway, NJ, 1988.

IEEE, *Requirements for Instrument Transformers*, C57.13–2008, Institute of Electrical and Electronics Engineers, Piscataway, NJ, 1993.

IEEE, System relaying committee working group, relay performance considerations with low ratio current transformers and high fault currents, *IAS Trans*., 31, 392–404, 1995.

IEEE, *Guide for the Application of Current Transformers used for Protective Relaying Purposes*, C37.110–2007, Institute of Electrical and Electronics Engineers, Piscataway, NJ, 1996.

IEEE, *Standard for High-Accuracy Instrument Transformers*, C57.13.6–2005, Institute of Electrical and Electronic Engineers, Piscataway, NJ, 2005.

Jenkins, B.D., *Introduction to Instrument Transformers*, George Newnes, London, U.K., 1967.

Karlicek, R.F. and Taylor, E.R., Jr., Ferroresonance of grounded potential transformers on ungrounded power systems, *AIEE Trans*., 78, 607–618, 1959.

Moreton, S.D., A simple method for determination of bushing current transformer characteristics, *AIEE Trans*., 62, 581–585, 1943.

Pagon, J., Fundamentals of instrument transformers, paper presented at *Electromagnetic Industries Conference*, Gainesville, FL, 1975.

Settles, J.L. et al., Eds., The analytical and graphical determination of complete potential transformer characteristics, *AIEE Trans*., 79, 1213–1219, 1961.

Swindler, D.L. et al., Eds., Modified differential ground fault protection for systems having multiple sources and grounds, *IAS Trans*., 30, 1490–1505, 1994.

Wentz, E.C., A simple method for determination of ratio error and phase angle in current transformers, *AIEE Trans*., 60, 949–954, 1941.

West, D.J., Current transformer application guidelines, *IAS Annual*, pp. 110–126, 1977.

Yarbrough, R.B., *Electrical Engineering Reference Manual*, 5th edn., Professional Publications, Belmont, CA, 1990.

www.EngineeringEbooksPdf.com

www.EngineeringEbooksPdf.com

8

Step-Voltage Regulators

8.1 Introduction **8**-1
8.2 Power Systems Applications **8**-4
8.3 Ratings **8**-9
8.4 Theory **8**-9
8.5 Bypassing Voltage Regulators **8**-16
8.6 Three-Phase Regulators **8**-20
8.7 Regulator Control **8**-22
Set Voltage • Bandwidth • Time Delay • Line-Drop Resistive and Reactive Compensation
8.8 Unique Applications **8**-25
Bibliography **8**-26

Craig A. Colopy
Cooper Power Systems Inc.

8.1 Introduction

Requirements for electric power become more challenging every day in terms of both quality and quantity. "Quality" means consumers need stable voltage without distortions and interruptions. "Quantity" means the user can draw as much load as needed without reducing the quality of the supply. These requirements come from industry as well as from domestic consumers, and each requirement influences the other. Maintaining voltage magnitude within a specified range is an important component of power quality. Power transformers and feeders impose their own impedance, and the amount of voltage drop depends on the loads and, consequently, the currents that flow through them. Voltage magnitudes decrease along the feeder, which means consumers at the end of the feeder will have the lowest voltage.

Distribution systems must be designed in such a way that voltage magnitudes always remain within a specified range as required by standards. This is accomplished through the use of voltage-control equipment and effective system design. Regulating power transformers (on-load-tap-changing transformers or OLTCs), three-phase step-voltage regulators, and single-phase step-voltage regulators are typical transformer-type equipment used to improve the voltage "profile" of a power system. Most of this section is dedicated to the single-phase step-voltage regulator, shown in Figure 8.1, used in substations and on distribution system feeders and laterals. Figure 8.2 shows the locations on a power system where voltage regulators are commonly applied.

Single-phase step-voltage regulators maintain a constant voltage by on-load voltage regulation wherever the voltage magnitude is beyond specified upper and lower limits. A common practice among utilities is to stay within preferred voltage levels and ranges of variation as set forth by *ANSI 84.1, Voltage Rating for Electric Power Systems and Equipment*, as shown in Table 8.1.

Electric supply systems are to be designed and operated so that most service voltages fall within the range *A* limits. User systems are to be designed and operated so that, when the service voltages are within range *A*, the utilization voltages are within range *A*. Utilization equipment is to be designed and rated to give fully satisfactory performance within the range *A* limits for utilization voltages.

www.EngineeringEbooksPdf.com

FIGURE 8.1 Single-phase step-voltage regulator.

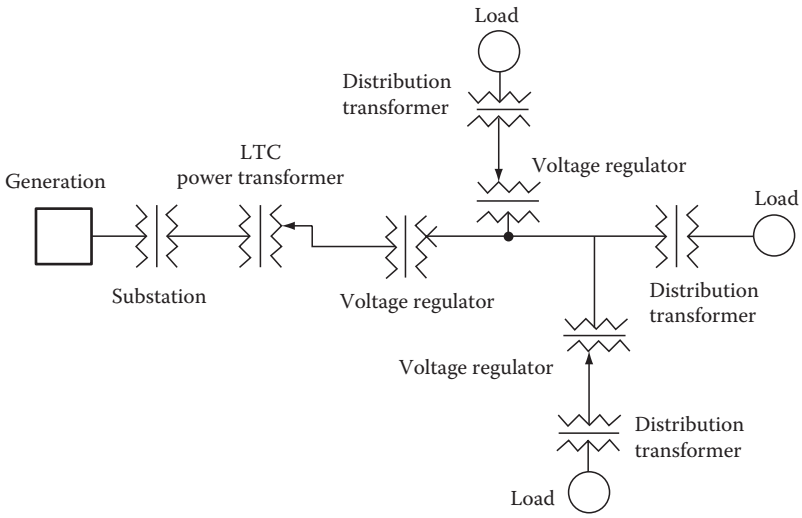

FIGURE 8.2 Power system.

www.EngineeringEbooksPdf.com

TABLE 8.1 Voltage Rating for Electric Power Systems and Equipment

	Range *A*, V	Range *B*, V
Maximum allowable voltage	126 (125[a])	127
Voltage-drop allowance for primary distribution line	9	13
Minimum primary service voltage	117	114
Voltage-drop allowance for distribution transformer	3	4
Minimum secondary service voltage	114	110
Voltage-drop allowance for plant wiring	6 (4[b])	6 (4[b])
Minimum utilization voltage	108 (110[b])	104 (106[b])

Source: ANSI C84.1-2006, American National Standard for electric power systems and equipment—Voltage ratings (60 Hz). With permission.

[a] For utilization voltage of 120–600 V.

[b] For building wiring circuits supplying lighting equipment.

Range *B* is provided to allow limited excursion of voltage outside the range *A* limits that necessarily result from practical design and operating conditions. The supplying utility is expected to take action within a reasonable time (e.g., 2 or 3 min) to restore utilization voltages to range *A* limits.

The combination of step-voltage regulators and fixed-ratio power transformers is often used in lieu of OLTC power transformers in the substation. To obtain constant voltage at some distance (load center) from the step-voltage regulator bank, a line-drop-compensation feature in the control is utilized.

Step-voltage regulators—single- and three-phase—are designed, manufactured, and tested in accordance with IEEE Std. C57.15, *IEEE Standard Requirements, Terminology, and Test Code for Step-Voltage Regulators*. A step-voltage regulator is defined as "a regulating autotransformer in which the voltage of the regulated circuit is controlled in steps by means of taps and without interrupting the load."

The most common step-voltage regulators manufactured today are single-phase, using reactive switching resulting in 32 - 5/8% voltage steps (16 boosting and 16 bucking the applied voltage), providing an overall ±10% regulation. They are oil-immersed and typically use ANSI Type II insulating oil in accordance with ANSI/ASTM D-3487.

Although not required by the IEEE standard, which now recognizes 65°C rise, most manufacturers today design and manufacture step-voltage regulators rated 55°C average winding rise over a 30°C average ambient and use a sealed-tank-type construction. The gases generated from arcing in oil, as a result of normal operation of the load tap changer, are vented through a pressure-relief device located on the tank above the oil level. Thermally upgraded paper insulation designed for an average winding rise of 65°C, along with the use of a sealed-tank-type system, allows for a 12% increase in load over the nameplate 55°C rise kVA rating.

Many regulators with a continuous-current rating of 668 A and below can be loaded in excess of their rated ampere load if the range of voltage regulation is limited at a value less than the normal ±10% value. Table 8.2 shows the percent increase in ampere load permitted on each single-phase step-voltage regulator when the percent regulation range is limited to discrete values less than ±10%.

TABLE 8.2 Increase in Ampere Load Permitted on Single-Phase Step-Voltage Regulators for Regulation Range <±10%

Range of Voltage Regulation, %	Continuous Current Rating, %
10.0	100
8.75	110
7.5	120
6.25	135
5.0	160

www.EngineeringEbooksPdf.com

Some regulators have limitations in this increased current capacity due to tap-changer ampacity limitations. In those cases, the maximum tap-changer capacity is shown on the regulator nameplate. Limiting the percent regulation range is accomplished by setting limit switches on the position indicator of the regulator to prevent the tap changer from traveling beyond a set position in either raise or lower directions. It should be recognized, however, that although the regulators can be loaded by these additional amounts without affecting the regulator's normal coil-insulation longevity, when the percent regulation is decreased with the attendant increase of loading, the life of the tap-changer contacts will be adversely affected.

8.2 Power Systems Applications

The following common types of circuits can be regulated using single-phase step-voltage regulators:

- A single-phase circuit
- One phase of a three-phase wye or delta circuit
- A three-phase, four-wire, multigrounded wye circuit
- A three-phase, three-wire wye or delta circuit

Figure 8.3 shows a voltage regulator that can be used to maintain voltage on a single-phase circuit or lateral off of a main feeder where the terminals are designated by the standard as S (source), L (load), and SL, as seen in Figure 8.4.

Regulators are designed to withstand severe fault currents and frequent switching or lightning surges that are encountered in substations or out on a main feeder. Three-phase power can be regulated by a bank of three single-phase step-voltage regulators connected in wye for a four-wire circuit or two or three single-phase regulators connected in an open- or closed-delta configuration for a three-wire circuit.

Wye-connected regulators (Figures 8.5 and 8.6) work independently from each other. Regulators will regulate the voltage between the individual phases and neutral. It is not necessary for loads on each phase

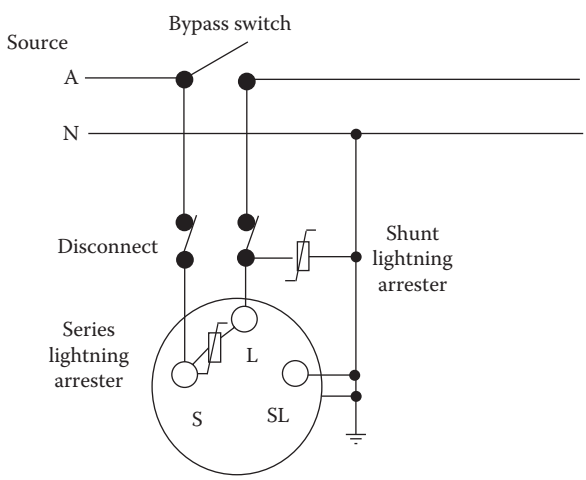

FIGURE 8.3 Voltage regulator connection in a single-phase circuit.

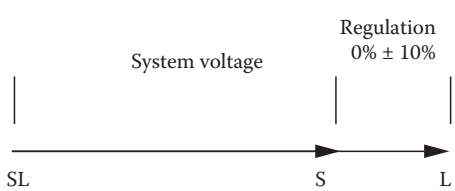

FIGURE 8.4 Phasor diagram of a voltage regulator regulating a single-phase circuit.

www.EngineeringEbooksPdf.com

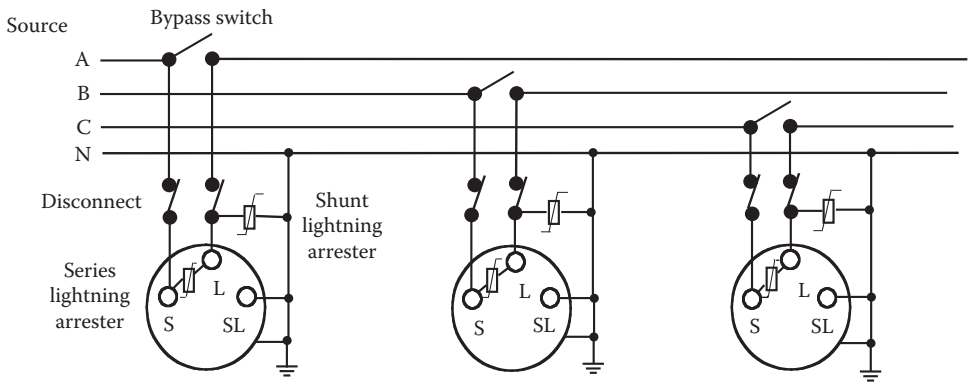

FIGURE 8.5 Connection of three regulators regulating a three-phase, four-wire, multigrounded wye circuit.

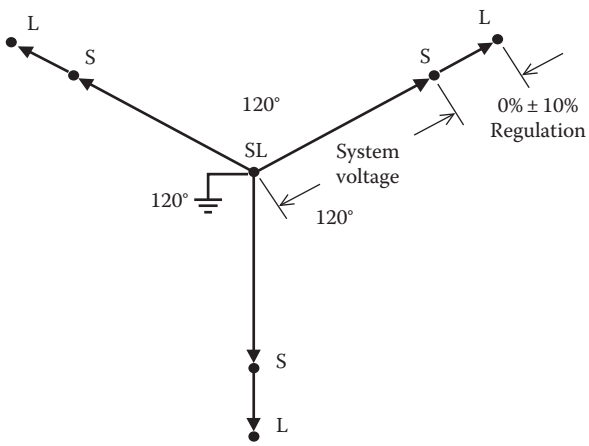

FIGURE 8.6 Phasor diagram of three regulators regulating a three-phase, four-wire, multigrounded wye circuit.

to be balanced. Unbalanced current will flow in the neutral wire, keeping the neutral reference from floating. In the case of a three-wire wye regular configuration, the neutral can shift, resulting in the regulator having no stable reference point from which to excite the controls of the regulator. This can cause overstressing of insulation and erratic regulator operation. Therefore, three regulators cannot be connected in ungrounded wye configuration on a three-phase, three-wire circuit unless the neutral is stabilized.

One method of stabilization is to link the common SL connections back to the grounded secondary neutral of a substation transformer that is located in the same vicinity. If a substation transformer is not available, the alternative is to install a small grounding bank consisting of three transformers, each from one-third to two-thirds the kVA rating of the individual regulators. The rating within the range depends on the expected unbalance in load. Either method allows a path for the unbalanced current to flow. The primary windings are connected in a wye configuration tying their neutral back to the neutral of the three regulators, while the secondary windings are connected in a delta configuration.

Two single-phase regulators connected in an open-delta bank, as shown in Figure 8.7, allow for two of the phases to be regulated independent of each other, with the third phase tending to read the average of the other two. A 30° phase displacement between the regulator current and voltage, as shown in Figure 8.8, is a result of the open-delta connection. Depending on the phase rotation, one regulator has its current lagging the voltage, while the other has its current leading the voltage.

When a three-phase, three-wire circuit incorporates three single-phase voltage regulators in a closed-delta-connected bank as shown in Figure 8.9, the overall range of regulation of each phase is dependent

www.EngineeringEbooksPdf.com

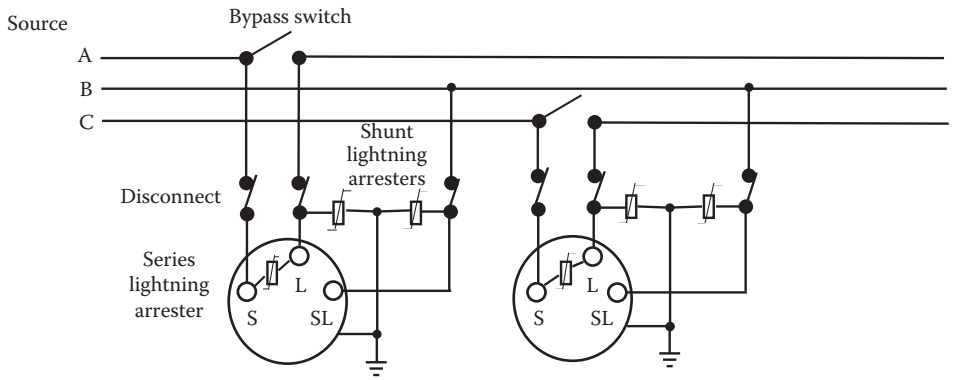

FIGURE 8.7 Connection of two voltage regulators regulating a three-phase, three-wire wye or delta circuit.

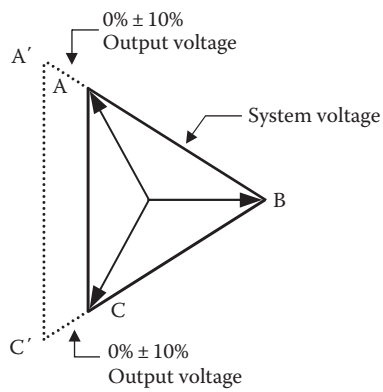

FIGURE 8.8 Phasor diagram of two voltage regulators regulating a three-phase circuit.

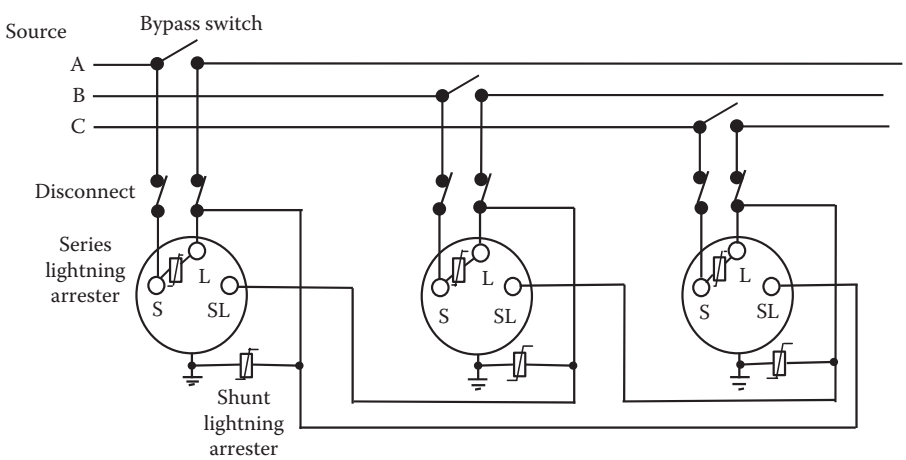

FIGURE 8.9 Connection of three voltage regulators in a three-phase, three-wire delta circuit.

www.EngineeringEbooksPdf.com

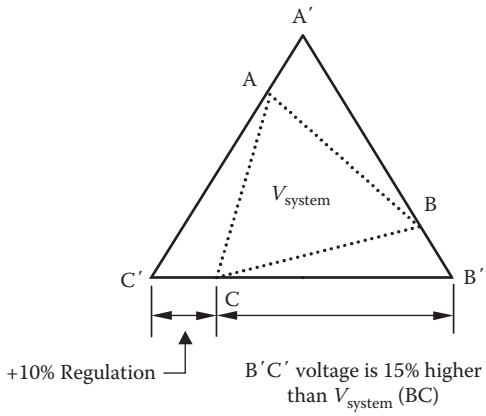

FIGURE 8.10 Phasor diagram of closed-delta-connected voltage regulators.

on the range of regulation of each regulator. This type of connection will give approximately 50% more regulation (15% versus 10%) than is obtained with two regulators in an open-delta configuration. A 30° phase displacement is also realized between the regulator current and voltage as a result of the delta connection. The phasor diagram in Figure 8.10 shows this. Depending on the phase rotation, the current will lag or lead the voltage, but the lag/lead relationship will be consistent for all three regulators.

Contributing to the effect is that the phase angle increases as the individual range of regulation of each regulator increases. A 4%–6% shift in the phase angle will be realized with the regulators set at the same extreme tap position. A voltage improvement of 10% in the phase obtained with the regulator operation leads to a 5% voltage improvement in the adjacent phase. If all three regulators operate to the same extreme position, the overall effect increases the range of regulation to ±15%, as shown in the phasor diagram of Figure 8.10.

Figure 8.11 reflects the power connection of a closed-delta bank of regulators. Current within the windings reaches a maximum of approximately ±5% of the line current as the regulators approach the full raise or lower positions, respectively. Because the operation of any regulator changes the voltage across the other two, it may be necessary for the other two to make additional tap changes to restore voltage balance. The 30° phase displacement between the regulator current and voltage at unity power-factor load for open- and closed-delta connections also affects the resulting arc energy and corresponding life of the tap-changer load-breaking contacts.

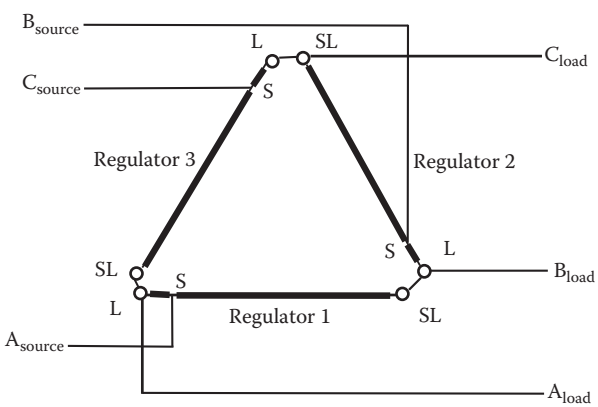

FIGURE 8.11 Power connection of closed-delta-connected voltage regulators.

www.EngineeringEbooksPdf.com

TABLE 8.3 Commonly Available Ratings for Single-Phase Voltage Regulators

Rated Volts	BIL, kV	Rated, kVA	Load Current, A
2,500	60	50	200
		75	300
		100	400
		125	500
		167	668
		250	1000
		333	1332
		416	1665
5,000	75	50	100
		75	150
		100	200
		125	250
		167	334
		250	500
		333	668
		416	833
7,620	95	38.1	50
		57.2	75
		76.2	100
		114.3	150
		167	219
		250	328
		333	438
		416	548
		500	656
		667	875
		833	1093
		1000	1312
13,800	95	69	50
		138	100
		207	150
		276	200
		414	300
		552	400
		667	483
		833	604
		1000	725
14,400	150	72	50
		144	100
		288	200
		333	200
		432	300
		576	400
		667	463
		833	578
		1000	694

www.EngineeringEbooksPdf.com

TABLE 8.3 (continued) Commonly Available Ratings for Single-Phase Voltage Regulators

Rated Volts	BIL, kV	Rated, kVA	Load Current, A
19,920	150	100	50
		200	100
		333	167
		400	201
		667	334
		833	418
		1000	502
34,500	200	173	50
		345	100
		518	150
		690	200

8.3 Ratings

The rated-load current of a step-voltage regulator is determined by the following equation:

$$I_{\text{Rated}} = \frac{3\phi \text{ load}}{V_{\text{L-L}} \times \sqrt{3}} \tag{8.1}$$

If the regulators are used in a single-phase circuit, four-wire grounded-wye circuit, or connected in a wye configuration in a three-wire system, the rated voltage of the regulator would be $V_{\text{L-L}}/\sqrt{3}$. If the regulators were connected in an open- or closed-delta configuration for a three-wire system, the rated voltage of the regulator would be $V_{\text{L-L}}$. As a result, the kVA rating of the regulator would be determined by the following equation:

$$\text{kVA} = (V_{\text{Rated}} \times I_{\text{Rated}} \times \text{per-unit range of regulation})/1000 \tag{8.2}$$

Thus, the kVA rating of a step-voltage regulator is determined considering its range of voltage regulation. Single-phase voltage regulators are available in the common ratings shown in Table 8.3, where all entries are understood to be for ±10% range of voltage regulation.

8.4 Theory

A step-voltage regulator is a tapped autotransformer. To understand how a regulator operates, one can start by comparing it with a two-winding transformer.

Figure 8.12 is a basic diagram of a transformer with a 10:1 turns ratio. If the primary winding or V_{source} has 1000 V applied, the secondary winding or V_{load} will have an output of 100 V (10%). These two

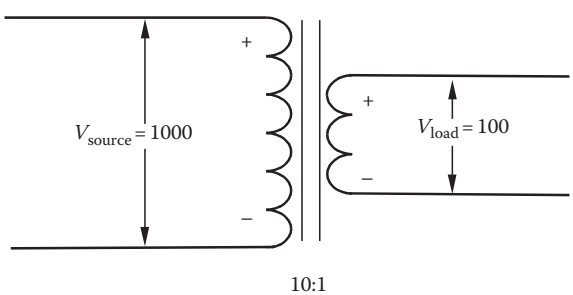

FIGURE 8.12 Transformer with 10:1 turns ratio.

www.EngineeringEbooksPdf.com

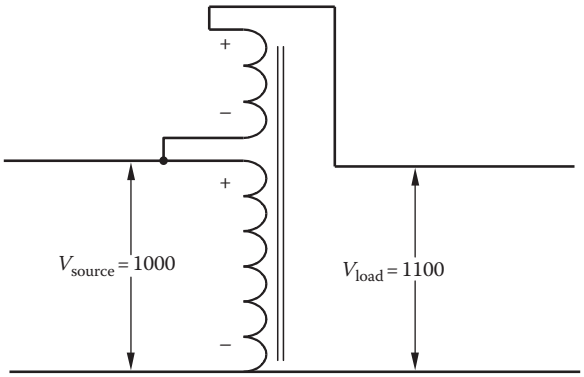

FIGURE 8.13 Step-up autotransformer.

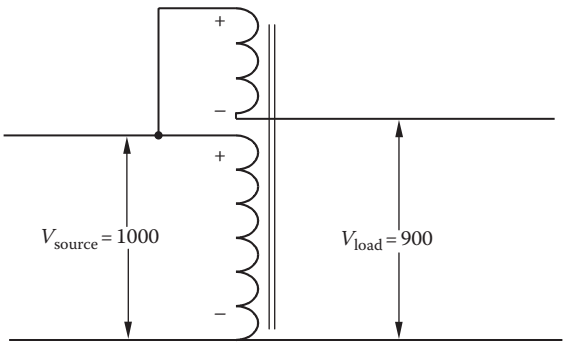

FIGURE 8.14 Step-down autotransformer.

independent windings can be connected so that their voltages aid or oppose one another. A voltmeter connected across the output terminals measures either the sum of the two voltages or the difference between them. The transformer becomes an autotransformer with the ability to raise (Figure 8.13) or lower (Figure 8.14) the primary or system voltage by 10%. This construction is similar to a "Type A" single-phase step-voltage regulator, as described later in this section.

In a voltage regulator, the equivalent of the high-voltage winding in a two-winding transformer would be referred to as the shunt winding. The low-voltage winding would be referred to as the series winding. The series winding is connected to the shunt winding in order to boost or buck the applied or primary voltage approximately 10%. The polarity of its connection to the shunt winding is accomplished by the use of a reversing switch on the internal motor–driven tap changer. Eight approximately 1¼% taps are added to the series winding to provide small voltage-adjustment increments. To go even further to provide fine voltage adjustment, such as 16 approximate 5/8% tap steps, a center-tapped bridging reactor (preventive autotransformer)—used in conjunction with two movable contacts on the motorized tap changer—is utilized. In all, there are 33 positions that include neutral, 16 lower positions (1L, 2L, 3L, 4L, etc.), and 16 raise positions (1R, 2R, 3R, 4R, etc.). Figure 8.15 illustrates a dial that indicates the arrangement of the tap positions.

It is common practice to have the tap changer located in the same compartment as the core and coil. Dielectric practices consider the oil and insulation degradation due to the arc by-products. Figure 8.16 shows a typical load-break tap changer used in a single-phase step-voltage regulator.

The process of moving from one voltage-regulator tap to the adjacent voltage-regulator tap consists of closing the circuit at one tap before opening the circuit at the other tap. The movable tap-changer contacts move through stationary taps alternating in eight bridging and eight nonbridging (symmetrical) positions. Figure 8.17 shows the two movable tap-changer contacts on a symmetrical position, with the

www.EngineeringEbooksPdf.com

FIGURE 8.15 Tap-changer position indicator.

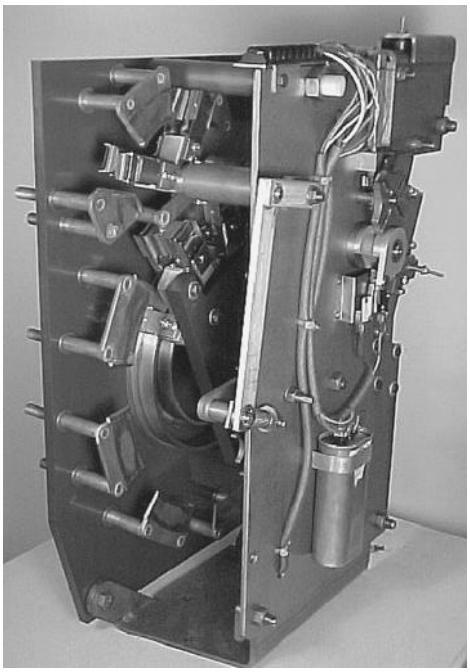

FIGURE 8.16 Single-phase step-voltage regulator tap changer.

center tap of the reactor at the same potential. This is the case at tap position N (neutral) and all evenly numbered tap positions.

An asymmetrical position, as shown in Figure 8.18, is realized when one tap connection is open before transferring the load to the adjacent tap. At this juncture, all of the load current flows through one-half of the reactor, magnetizing the reactor, and the reactance voltage is introduced into the circuit for about 25–35 ms during the tap change.

Figure 8.19 shows the movable contacts in a bridging position; voltage change is one-half the 1¼% tap voltage of the series winding because of its center tap and movable contacts located on adjacent stationary contacts. This is the case at all oddly numbered tap positions.

www.EngineeringEbooksPdf.com

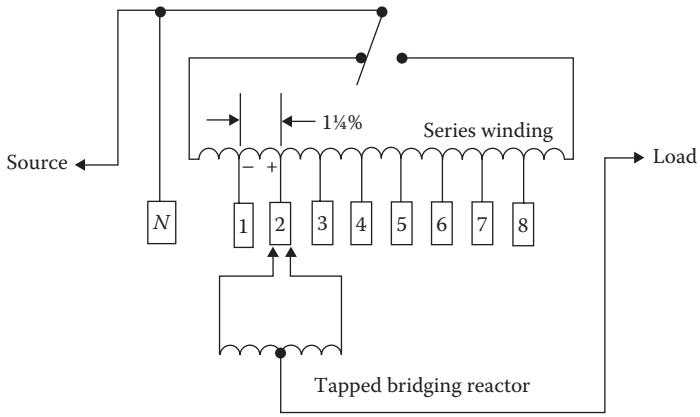

FIGURE 8.17 Two movable contacts on the same stationary contact (symmetrical position).

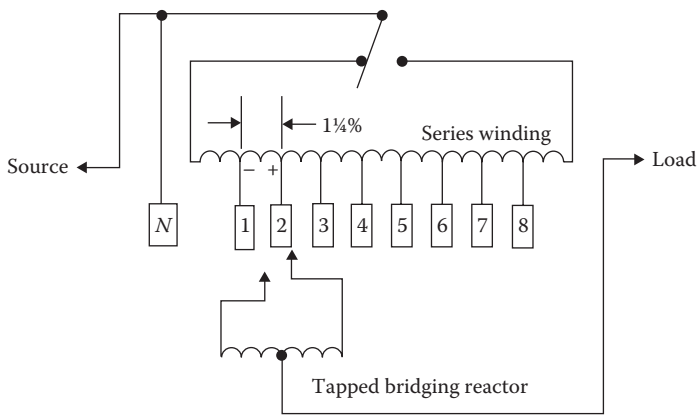

FIGURE 8.18 One movable contact on stationary contact (asymmetrical position).

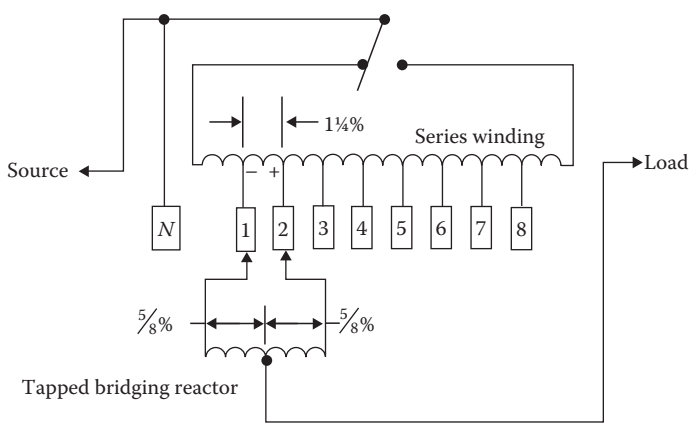

FIGURE 8.19 Two movable contacts on adjacent stationary contacts (bridging position).

www.EngineeringEbooksPdf.com

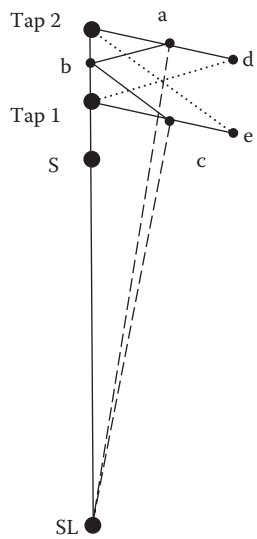

FIGURE 8.20 Voltage phasor diagrams involved in a tap change.

Voltage phasor relations shown in Figure 8.20 represent a tap change. In this figure, S–SL represents source or unregulated voltage, and sections of the series winding are represented by S–TAP 1 and TAP 1–TAP 2. In operating the tap changer from TAP 1 to TAP 2, the load or regulated voltage has the following successive values:

SL–TAP 2: both contacts are closed on TAP 2, symmetrical position as shown in Figure 8.17.
SL–a: one contact is closed on TAP 2, asymmetrical position as shown in Figure 8.18. TAP 2–a is the voltage drop across the reactor half.
SL–b: movable contacts are located on adjacent stationary contacts TAP 1 and TAP 2, bridging position as shown in Figure 8.19.
SL–c: one contact is closed on TAP 1, asymmetrical position. TAP 1–c is the voltage drop across the reactor half.
SL–TAP 1: both contacts are closed on TAP 1, symmetrical position.
TAP 1–c and TAP 2–a are reactance voltages introduced into the circuit by the reactor in the asymmetrical positions. TAP 1–e and TAP 2–d represent the total reactor voltage. TAP 2–e represents the voltage ruptured when bridging position is opened at TAP 2, while TAP 1–d represents the voltage ruptured if bridging position is opened at TAP 1.

Figure 8.21 shows a typical tap-changer interruption envelope. Load current (I_L), tap voltage, reactor circulating current (I_C), and power factor (PF) are key variables affecting a tap changer's interrupting ability and its contact life. A circulating current (I_C), caused by the two contacts being at different positions (reactor energized with 1¼% tap voltage), is limited by the reactive impedance of this circuit. Two opposing requirements must be kept in mind when designing the amount of reactance for the value of the circulating current. First, the circulating current must not be excessive; second, the variation of reactance during the switching cycle should not be so large as to introduce undesirable fluctuations in the line voltage. The reactor has an iron core with gaps in the magnetic circuit to set this magnetizing circulating current around 50% of full-load current, thus providing an equitable compromise between no-load and load conditions. The value of this circulating current has a decided effect on switching ability and contact life. The ideal reactor, from an arcing standpoint, would be one that has a closed magnetic circuit at no-load with an air gap that would increase in direct proportion to increase in load. Precaution needs to be taken in the design of the reactor to avoid high inrush currents during tap-changer switching.

www.EngineeringEbooksPdf.com

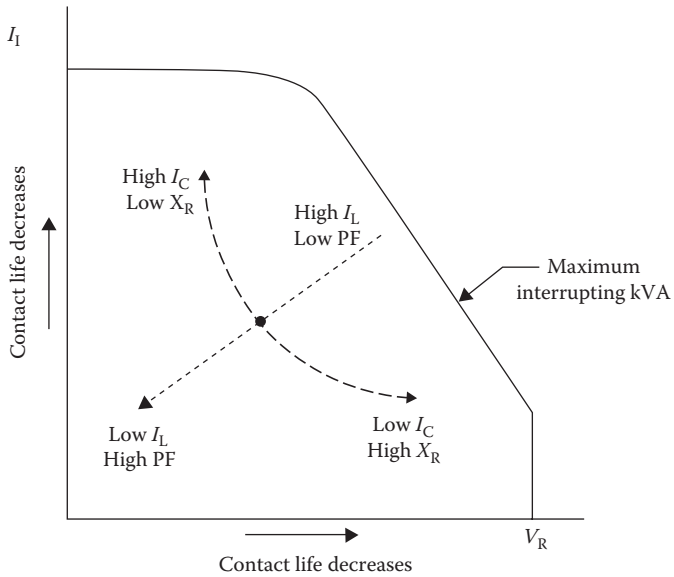

FIGURE 8.21 Tap-changer interruption envelope. I_I, interrupted current; V_R, recovery voltage; I_L, load current; I_C, reactive circulating current; X_R, PA reactance; PF, load power factor.

The voltage at the center tap is 5/8%, one-half of the 1¼% tap voltage of the series winding taps. Some regulators, depending upon the rating, use an additional winding (called an equalizer winding) in the bridging reactor circuit. The equalizer winding is a 5/8% voltage winding on the same magnetic circuit (core) as the shunt and series winding. The equalizer winding is connected into the reactor circuit opposite in polarity to the tap voltage. This is done so that the reactor is excited at 5/8% of line voltage on both the symmetrical and bridging positions. Figure 8.22 shows an equalizer winding incorporated into the main coil of a regulator.

Voltage regulators are designed and manufactured in two basic constructions, defined by IEEE standards as Type A and Type B. Type A step-voltage regulators have the primary circuit (source voltage) connected directly to the shunt winding of the regulator. The series winding is connected to the load side of the regulator and, by adjusting taps, changes the output voltage. With Type A construction, the core excitation varies with the source voltage because the shunt winding is connected across the primary circuit.

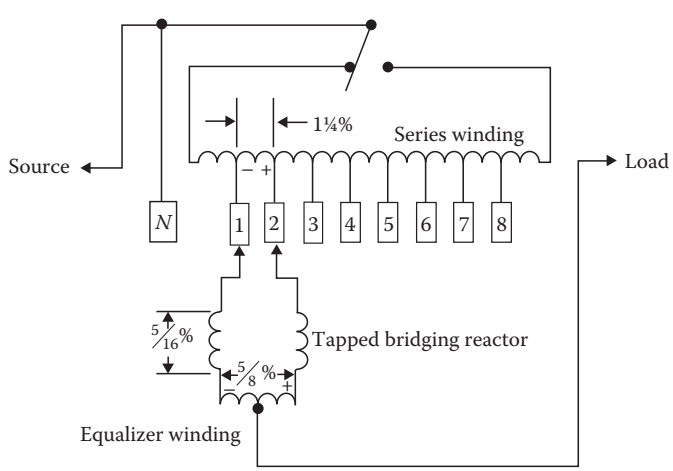

FIGURE 8.22 Equalizer winding incorporated into the main coil of a regulator.

www.EngineeringEbooksPdf.com

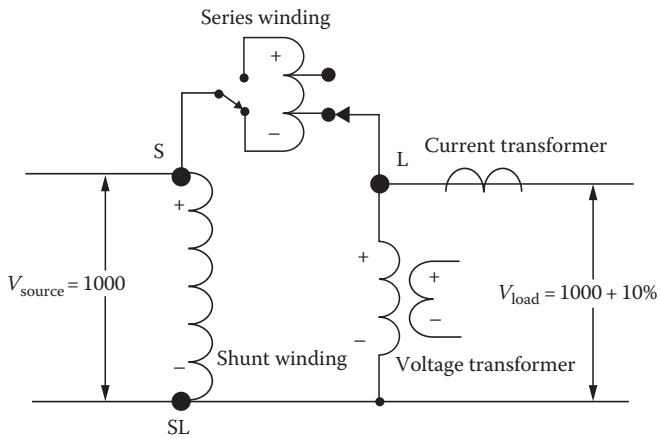

FIGURE 8.23 Voltage regulation on the load side (Type A).

A separate voltage transformer is used to provide voltage for the tap changer and control. The maximum range of regulation of the "raise" side equals the maximum range of regulation of the "lower" side, with 10% being the minimum amount of regulation. See the schematic diagram in Figure 8.23.

Type B step-voltage regulators are constructed so that the primary circuit (source voltage) is applied by way of taps to the series winding of the regulator, which is connected to the source side of the regulator. With Type B construction, the core excitation is constant since the shunt winding is connected across the regulated circuit. A control winding located on the same core as the series and shunt windings is used to provide voltage for the tap changer and control. The maximum range of regulation of the "raise" side is higher than the maximum range of regulation of the "lower" side, with 10% being the minimum amount of regulation on the "raise" side. See the schematic diagram in Figure 8.24.

Usually, the choice of Type A or Type B is that of the supplier. However, the user can specify an identical regulator design be provided if the application can anticipate the need to parallel with another unit in the same substation. Paralleling of regulators not of identical design can cause excessive circulating current between them. This is true even for short-term operation during switching, when the units are placed on the same numerical tap position and the control function is disabled. Caution: Any paralleling of step-voltage regulators (as described in this chapter) operating, even

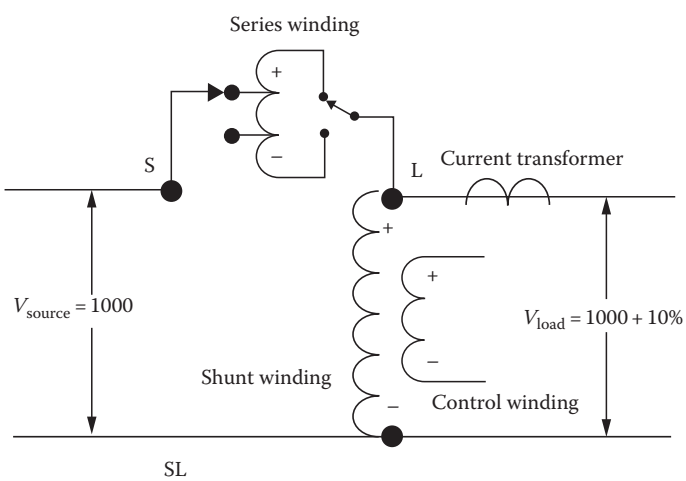

FIGURE 8.24 Voltage regulation on the source side (Type B).

www.EngineeringEbooksPdf.com

momentarily, on differing tap positions requires the inclusion of supplemental system reactance to avoid excessive circulating current during operation.

8.5 Bypassing Voltage Regulators

One of the advantages of the application of voltage regulators versus OLTC transformers is the ability to bypass, maintaining energization of line, while installing or removing the voltage regulators from the system. A voltage regulator has its voltage correction or tapped winding in series with the line. Taking voltage regulators in or out of service involves closing a bypass switch between the source and load bushings. It is imperative none of the tapped series winding is in the circuit while bypassing the voltage regulator. If any part of the series winding is in the circuit and shorted, a significant amount of current will flow in the low impedance bypass loop driven by the voltage differential between the source and load bushings. The neutral position takes all of the turns of the series winding out of the circuit. Any position other than neutral places a part of the series winding in the circuit. Therefore, it is imperative the voltage regulator is placed in the neutral position before it is installed in or removed from the line. The amount of circulating current generated during a "bypass off neutral" event is dependent mainly on the impedance and the series winding voltage of the voltage regulator. The magnitude of this current changes depending on the tap position the voltage regulator is in when bypassed off of neutral. Related factors affecting this amount of circulating current are the source impedance and voltage, voltage regulator coil construction, and design type (A, B, or series transformer). The highest amount of circulating current occurs at the tap position where the ratio of series winding driving voltage to loop impedance is maximized. The impedance is effectively 0 in the neutral position with differential voltage being "0." Maximum impedance value is realized at the extreme positions, 16 Lower and 16 Raise. Due to the magnitude of the circulating current generated, extensive damage will occur with the excessive heat involved. Leads from the coil to the reactor and tap changer carrying the high circulating current will experience mechanical forces tending to move them toward the tank wall and other grounded components. Very high internal tank pressures caused by the heating effect of the circulating current, potential melting of conductors, and ground fault currents can cause eventful failures of the devices and significant injury or death.

Figure 8.25 shows the circuitry of a "bypass off neutral" condition in which part of the series winding, N_{SER}, is shorted by the closed "S" and "L" disconnect switches and bypass switch.

The values of resultant currents flowing in the series winding, i_{SER}, and the shunt winding, i_{SHUNT}, are dependent on the value of the load current, i_L, the circulating current, i_{CIR}, and the ratio of the turns between the affected series winding sections, N_{SER}, and shunt winding, N_{SH}. Source current, i_{SOURCE}, is

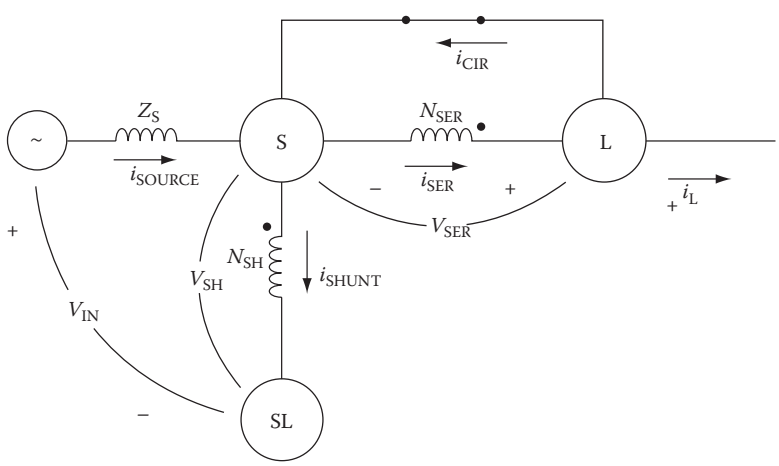

FIGURE 8.25 Bypass loop circuitry.

www.EngineeringEbooksPdf.com

a function of shunt winding current, i_{SH}, and load current, i_L. This is the current the overcurrent protection senses. The magnitude of this current may not be adequate to activate overcurrent protection devices during a "bypass off neutral" event. In many cases, it may be even lower than rated current of the voltage regulator especially if the device is not loaded heavily at the time. Even if it activates the overcurrent protection device, the timing of the circuit breaker or other device to trip may be such that it will not respond and clear the circuit before a failure occurs.

The following equations are used to calculate the various currents flowing throughout the apparatus and circuitry outside of the voltage regulator which includes the overhead bypass switch and the "S" and "L" disconnect switches:

$$i_{SER} = i_{CIR} + i_L$$

$$i_{SHUNT} = i_{SER} \times \frac{N_{SER}}{N_{SH}}$$

$$i_{SOURCE} = i_{SER} - i_{CIR} + i_{SHUNT}$$

$$i_{SOURCE} = i_L + i_{SHUNT}$$

$$V_{SER} = V_{SH} \times \frac{N_{SER}}{N_{SH}}$$

$$V_{SH} = V_{IN} - i_{SOURCE} \times Z_S$$

$$i_{CIR} = \frac{V_{SER}}{Z_R}$$

$$i_{CIR} = \frac{V_{SH}}{Z_R} \times \frac{N_{SER}}{N_{SH}}$$

$$i_{CIR} = (V_{IN} - i_{SOURCE} \times Z_S) \times \frac{N_{SER}}{N_{SH} \times Z_R}$$

$$i_{CIR} = [V_{IN} - (i_L + i_{SHUNT}) \times Z_S] \times \frac{N_{SER}}{N_{SH} \times Z_R}$$

$$i_{CIR} + i_L = [V_{IN} - (i_L + i_{SHUNT}) \times Z_S] \times \frac{N_{SER}}{N_{SH} \times Z_R} + i_L = i_{SER}$$

$$i_{SER} = \left[V_{IN} - \left(i_L + i_{SER} \times \left(\frac{N_{SER}}{N_{SH}} \right) \right) \times Z_S \right] \frac{N_{SER}}{N_{SH} \times Z_R} + i_L$$

$$i_{SER} = V_{IN} \times \frac{N_{SER}}{N_{SH} \times Z_R} - i_L \times \frac{N_{SER} \times Z_S}{N_{SH} \times Z_R} - i_{SER} \times \frac{N_{SER^2} \times Z_S}{N_{SH^2} \times Z_R} + i_L$$

$$i_{SER} \left(1 + \frac{N_{SER^2}}{N_{SH^2} \times Z_R} \right) = V_{IN} \times \frac{N_{SER}}{N_{SH} \times Z_R} - i_L \left(\frac{N_{SER} \times Z_S}{N_{SH} \times Z_R} - 1 \right)$$

www.EngineeringEbooksPdf.com

$$i_{SER}\left(\frac{N_{SH^2}\times Z_R + N_{SER^2}\times Z_S}{N_{SH^2}\times Z_R}\right) = \frac{V_{IN}\times N_{SER} - i_L\times N_{SER}\times Z_S N_{SH}\times Z_R}{N_{SH}\times Z_R}$$

$$i_{SER} = \frac{V_{IN}\times N_{SER}\times N_{SH} - i_L\times N_{SER}\times N_{SH}\times Z_S N_{SH^2}\times Z_R}{N_{SH^2}\times Z_R + N_{SER^2}\times Z_S}$$

where

i_{SER} is the series winding current
i_{SHUNT} is the shunt winding current
i_{CIR} is the circulating current
i_L is the load current
i_{SOURCE} is the source current
V_{IN} is the input voltage
V_{SH} is the shunt winding voltage
V_{SER} is the series winding voltage for the specified tap position
Z_S is the source impedance
Z_R is the voltage regulator auto impedance for specified tap position
N_{SER} is the series winding turns for specified tap position
N_{SH} is the shunt winding turns

An ATP (Alternative Transient Program) can be used to model and provide the resultant "bypass off neutral" current for specific parameters of a voltage regulator application on a power system. Figure 8.26 shows a specific model created using ATP.

The system source impedance generally reduces "bypass off neutral" current by reducing the input voltage to the regulator. The source current flowing through this impedance creates a voltage drop that reduces the regulator input voltage. This in turn means a lower induced voltage across the shorted series winding and thus a lower "bypass off neutral" current.

Generally Type A regulators have either their series or shunt windings split in half and placed on the inside and outside of the other winding for higher values of short-circuit current withstand. This type of regulator design realizes its maximum circulating current magnitude in the extreme lower position, 16L, if bypassed off of the neutral position. This is due to the higher source voltage that is present across the shunt winding, resulting in a higher series voltage with the corresponding impedance value at that position.

The Type B design typically has the tapped series winding physically located on the outside of the shunt (excitation) winding. A Type B regulator realizes its maximum current magnitude, depending on the rating, between 2R and 5R, inclusive. Even though position 1R has the lowest amount of impedance, there is not enough differential series winding voltage to generate a maximum current value.

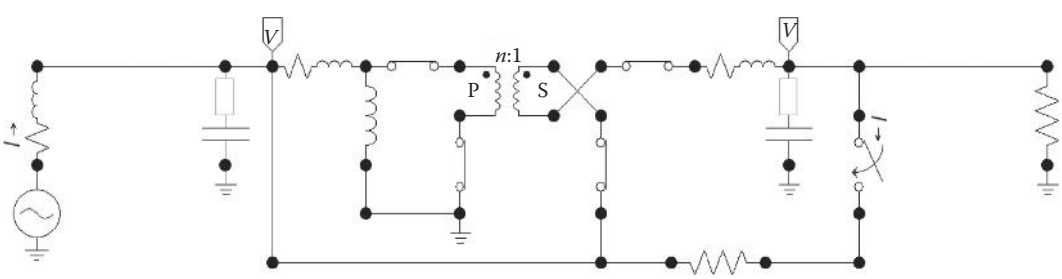

FIGURE 8.26 ATP model.

www.EngineeringEbooksPdf.com

These two designs, Type A and Type B, have significantly different impedance patterns while moving from Neutral to the extreme positions due to the Type A design generally having a split series or shunt winding in its construction. A series transformer design has a unique impedance pattern of its own. The difference in occurrence of the maximum value of "bypass off neutral" current per specific tap position between Type A and Type B designs is also attributable to the fact that ±10% unregulated voltage excites the shunt (excitation) winding of Type A design while the regulated voltage of Type B regulator excites its shunt (excitation) winding.

The value of the "bypass off neutral" current follows a specific pattern when looking at all of the 32 positions outside of the neutral position depending on whether the regulator is Type A or Type B design. These typical patterns for the symmetrical current are shown in Figures 8.27 and 8.28. The key takeaway here is that no tap position is safe to bypass the regulator except for the Neutral tap

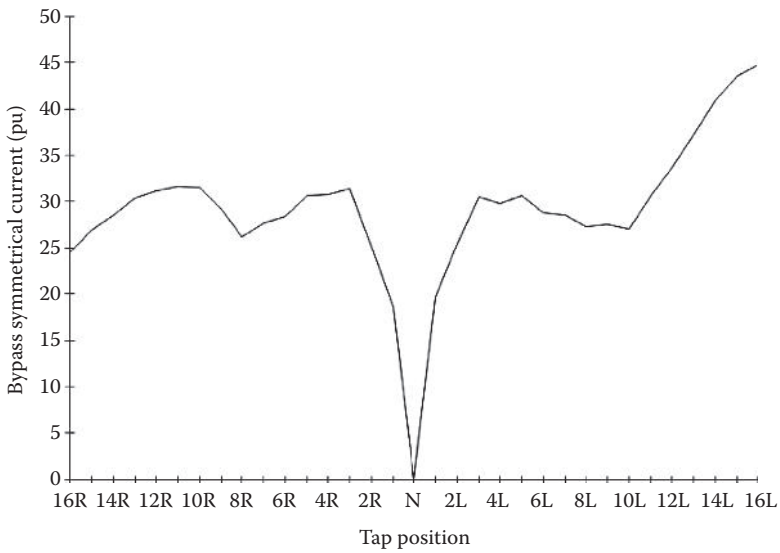

FIGURE 8.27 Typical bypass off neutral symmetrical current pattern for Type A design.

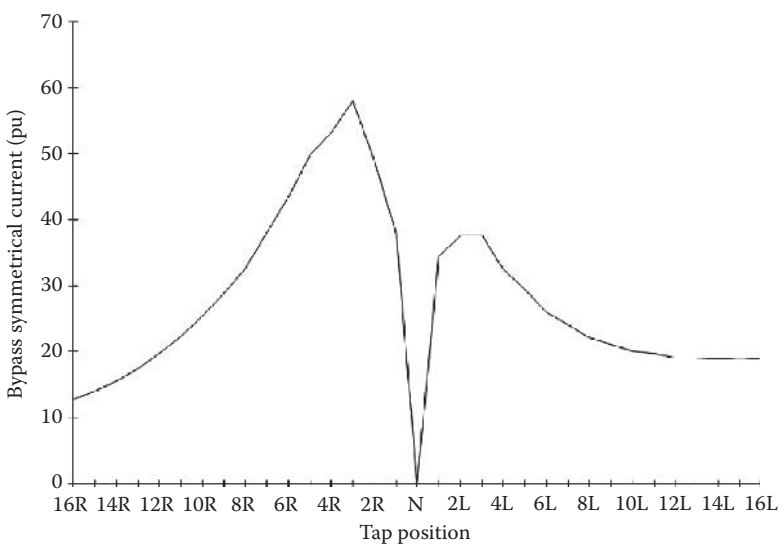

FIGURE 8.28 Typical bypass off neutral symmetrical current pattern for Type B design.

www.EngineeringEbooksPdf.com

position in which no part of the series winding is in the circuit. Past documentation has indicated positions 1R or 1L being the worst condition or the highest amount of fault current generated during a bypass operation due to the minimum amount of impedance involved. As shown in these figures, this is not the case. The amount of available impedance voltage is the key factor determining the amount of fault current generated. The rate of change of the regulator impedance tending to limit circulating current versus the rate of change of the series voltage that is driving current determines the changes in circulating current magnitude between positions and the position of maximum circulating current. If, when changing tap positions, the change of the voltage between the positions is more than the corresponding change in impedance, the circulating current magnitude will increase. The same is true in reverse.

Prior to installing or removing from service, refer to the appropriate voltage regulator installation manual for information and review of recommended procedures, cautions, and warnings. Only a regulator in the Neutral position can be safely removed from service without interrupting load continuity. It is recommended to use more than one method to determine the Neutral condition. Four indications recommended are the following:

1. Neutral indicator light on the control is indicating the neutral position. Neutral is indicated only when a specified light is continuously illuminated. The light is activated by a switch on the tap changer.
2. Position indicator located on the outside of the voltage regulator apparatus is in the neutral position. The position indicator pointer is mechanically connected to the tap changer.
3. Tap position of the control display indicates tap changer is in neutral position. Input of this display is given signal from a separate electric feedback circuit on the tap changer.
4. Using an industry acceptable method, verify there is no voltage difference between the source and load bushings.

Prior to bypassing, after the voltage regulator has been verified to be in the neutral position by all indications agreeing with each other, additional safety action must be taken to ensure that the tap changer will not inadvertently switch to an off neutral position. This can be accomplished by doing the following:

1. Place all control and power switches in the off position.
2. Remove appropriate fuses and/or open breakers at the control.
3. Open any visible knife switches in the internal supply from the voltage regulator apparatus.

Using the appropriate installation manuals, the voltage regulator can now be installed or removed from service using the proper sequence of closing and opening the disconnect and bypass switches.

If there is ever a doubt about the regulator being in the Neutral position during a bypass operation, it would be best to de-energize the line. This is the safest, for both the regulator and the operating personnel. If the regulator is off Neutral and it is impossible to change taps to bring it back to Neutral, the only method left is to de-energize the line. This would be the situation if the tap changer is not operating.

8.6 Three-Phase Regulators

If feeders have similar load characteristics and load-center voltage requirements—and if the incoming supply voltage is balanced—then the distribution side of the substation bus can be regulated by a three-phase regulator. The choice of using a three-phase or three single-phase regulators depends on several factors, including cost and the need for unbalance correction. With a three-phase unit, there is no capability to correct for voltage imbalances caused by unequal loading. If the load is predominantly

www.EngineeringEbooksPdf.com

three-phase, or consistently balanced, a three-phase unit may be the better choice. However, most rural distribution systems contain only a small percentage of balanced three-phase loads. Therefore, three-phase regulators are less common in the industry than the single-phase step-voltage regulators. Chief among the benefits of single-phase regulation is the ability of the single-phase voltage regulators to correct system unbalance. For the common grounded wye system, each phase is regulated to a given set point, irrespective of what is going on with the other two phases.

Basic theory behind the design of three-phase regulators is similar to single-phase regulators. Essentially, three single-phase regulators are located in the same tank with their tap changers ganged together and being operated and monitored by one control. The three-phase regulator has only one of its phases monitored to provide a current and voltage supply to the control. Thus, all three phases are regulated based on the monitoring of one phase. This is fine for a system that has balanced loads on all three phases. Figure 8.29 shows a three-phase regulator connected to a four-wire system. The phasor diagram is similar to the one shown in Figure 8.5.

The three-phase voltage regulators, up to 13.8 kV, inclusive, with a continuous-current rating of 668 A and below, can be loaded in excess of their rated ampere load if the range of voltage regulation is limited at a value less than the normal ±10% value. Table 8.4 shows the percent increase in ampere load permitted on each three-phase step-voltage regulator when the percent regulation range is limited to values of ±10%, ±8.75%, ±7.5%, ±6.25%, and ±5%.

Three-phase voltage regulators are available in the common ratings shown in Table 8.5.

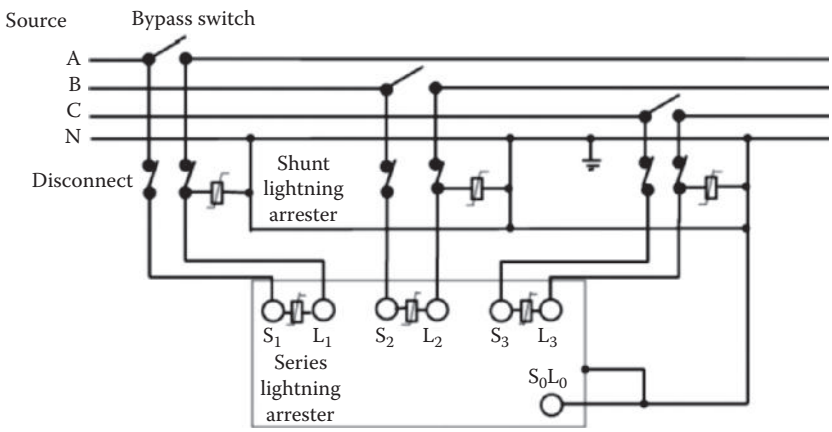

FIGURE 8.29 Connection of three-phase regulator regulating a three-phase, four-wire, multigrounded wye circuit.

TABLE 8.4 Increase in Ampere Load Permitted on Each Three-Phase Step-Voltage Regulator at Five Levels of Voltage Regulation

Range of Voltage Regulation, %	Continuous Current Rating, %
10.0	100
8.75	108
7.5	115
6.25	120
5.0	130

www.EngineeringEbooksPdf.com

TABLE 8.5 Common Ratings for Three-Phase Voltage Regulators

Rated Volts	BIL, kV	Rated kVA	Load Current, A
7,620/13,200 wye	95	500	219
		750	328
		1000	437
		1500	656
		2000	874
		2500	1093
		3000	1312
19,920/34,500 wye	150	500	84
		750	126
		1000	167
		1500	251
		2000	335
		2500	418
		3000	502

8.7 Regulator Control

The purpose of the regulator control is to provide an output action as a result of changing input conditions, in accordance with preset values that are selected by the regulator user. The output action is the energization of the motorized tap changer to change taps to maintain the correct regulator output voltage. The changing input is the output-load voltage and current from an internal voltage transformer or control winding and current transformer, as shown previously in Figures 8.23 and 8.24, respectively. The preset values are the values the regulator user has selected as control parameters for the regulated voltage. Basic regulator control settings are the following:

- Set voltage
- Bandwidth
- Time delay
- Line-drop resistive and reactive compensation

8.7.1 Set Voltage

The control set voltage is dependent upon the regulator rating and the system voltage on which it is installed. The regulator nameplate shows the voltage transformer or shunt winding/control ratio that corresponds to the system voltage. The regulator load voltage is the product of this ratio and the control set voltage. If the winding ratio of the internal voltage transformer of the step-voltage regulator is the same as that of a typical distribution transformer on the system, the voltage level is simply the desired voltage, given on a 120 V base. However, the regulator voltage-transformer ratio is not always the same, and it may be necessary to calculate an equivalent value that corresponds to 120 V on the distribution transformer secondary. Equation 8.3 can be used to find this equivalent voltage value:

$$V = \frac{\text{(Distribution transformer ratio)}}{\text{(Regulator VT ratio)}} \times 120 \tag{8.3}$$

www.EngineeringEbooksPdf.com

For example, if the distribution transformers are connected 7620/120, this gives a ratio of 63.5:1. If the regulator voltage-transformer ratio is 60:1, the equivalent voltage-level setting, from Equation 8.4, is found to be

$$V = \frac{(63.5)}{(60)} \times 120 = 127\,\text{V} \tag{8.4}$$

Normally, the operator sets the voltage level at a minimum value that is required at the location, which is usually above the optimum level, for example, 122 V. This consideration will likely differ when line-drop compensation is used, as described later.

8.7.2 Bandwidth

The bandwidth is the total voltage range around the set-voltage value, which the control will consider as a satisfied condition. For example, a 2 V bandwidth on a 120 V setting means that the control will not activate a tap change until the voltage is above 121 V or below 119 V. The bandwidth is generally kept quite narrow in order to keep the voltage as close as possible to the desired level. Increasing the bandwidth may reduce the number of tap-change operations but at the expense of voltage quality. The regulators in a substation or on a main feeder tend to have their bandwidths set at a smaller setting than units located on laterals that feed isolated loads. A minimum bandwidth of two times the volts per tap (5/8% or 0.75 V) of the regulator is recommended; this correlates to 1.5 V on most regulators.

8.7.3 Time Delay

The time delay is the period of time in seconds that the control waits from the time the voltage goes out of band to when power is applied to the tap-changer motor to make a tap change. Many voltage fluctuations are temporary in nature, such as those resulting from motor starting, or even from fault conditions. It is not desirable to have the step-voltage regulator change taps for these momentary voltage swings. By specifying a time-delay value of 15 or 30 s, for example, the regulator will ignore the vast majority of these temporary voltage swings and only operate when the voltage change is more long term, such as from adding or subtracting load. A general recommendation is a minimum time delay of 15 s. This length of time covers the vast majority of temporary voltage swings due to equipment starting, cold-load pickup, etc.

The time-delay setting also has another important benefit when attempting to coordinate two or more regulators in series along the line. One common situation would be to have a regulator bank at the substation providing whole-feeder regulation, with a line regulator out on the feeder to regulate a specific load. The substation regulators should be the first to respond to voltage changes on the system, with the line regulator adjusting as needed for its individual area. By setting the time delay of the line regulator higher that of the substation bank, the substation bank will respond first and regulate the voltage as best it can. If the substation regulation is sufficient to return the feeder voltage to within the bandwidth of the line regulator, that regulator will not need to operate. The suggested minimum time-delay difference between banks of regulators is 15 s. This coordination between cascading banks of regulators, as shown in Figure 8.30, eliminates unnecessary hunting, thus improving efficiency.

8.7.4 Line-Drop Resistive and Reactive Compensation

Quite often regulators are installed at some distance from a theoretical load center or the location at which the voltage is regulated. This means the load will not be served at the desired voltage level due to the losses (voltage drop) on the line between the regulator and the load. Furthermore, as the load increases, line losses also increase, causing the lowest-voltage condition to occur during the time of heaviest loading. This is the least desirable time for this to occur.

www.EngineeringEbooksPdf.com

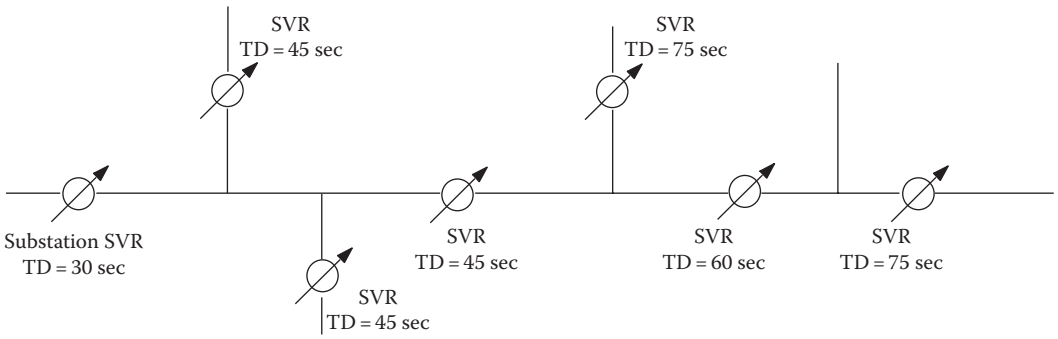

FIGURE 8.30 Cascading single-phase voltage regulators.

To provide the regulator with the capability to regulate at a "projected" load center, a line-drop-compensation feature is incorporated in the control. Of all the devices in the step-voltage regulator control system, none is more important—and at the same time less understood—than line-drop compensation. This circuitry consists of a secondary supply from the internal current transformer, proportional to the load current, and resistive and reactive components through which this current flows. As the load current increases, the resulting secondary current flowing through these elements produces voltage drops, which simulate the voltage drops on the primary line. This causes the "sensed" voltage to be correspondingly altered; therefore, the control responds by operating upon this pseudo load-center voltage. To select the proper resistive and reactive values, the user must take into account several factors about the line being regulated.

When line-drop compensation is not used, the step-voltage regulator reads the voltage at its own terminals and compares it with a reference voltage level and bandwidth setting. If the sensed voltage is outside the set bandwidth, the regulator automatically responds to bring the load-side voltage in line with the programmed settings. This is the normal operation of a step-voltage regulator that is not using line-drop compensation. Adjusting the voltage level at the regulator to compensate for a low voltage away from the regulator near a load center is only a temporary solution for a specific load. Figure 8.31 shows an example of a power-system voltage profile using the voltage-level setting in lieu of line-drop compensation to improve voltage at a load center.

Therefore, the step-voltage regulator, without line-drop compensation, can hold a reasonably constant voltage at the regulator location only. This is not likely to be the best scenario for most applications that need a reliable voltage for the entire length of the feeder. The ideal situation is to provide the value of the voltage-level setting at the primary side of the distribution transformer for all consumers. Since this is not

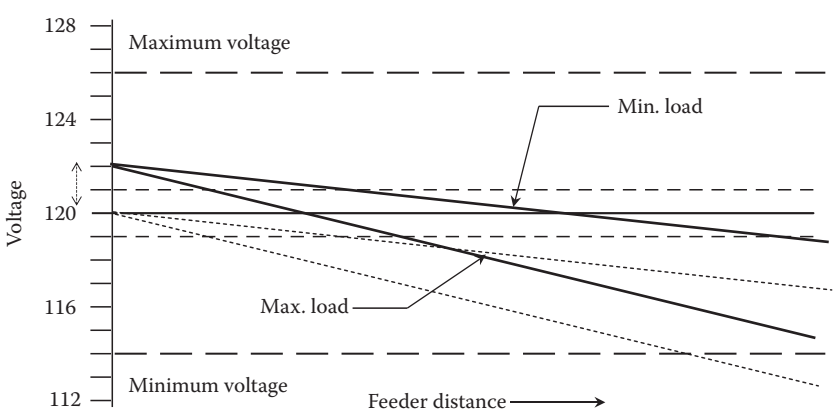

FIGURE 8.31 Voltage profile using voltage-level setting without LDC.

www.EngineeringEbooksPdf.com

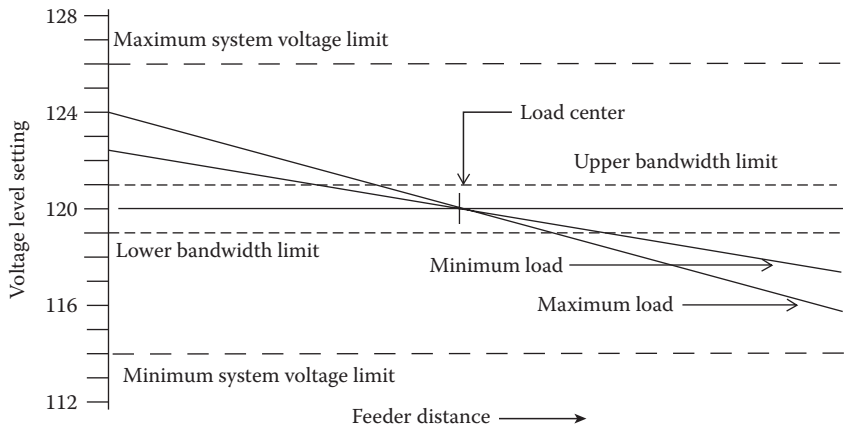

FIGURE 8.32 Voltage profile using voltage-level setting with LDC.

realistically attainable, the objective would be to provide each consumer a voltage as close as possible to the voltage-level value for all loads. To do this, the point on the line at which the voltage is regulated should not be at the regulator but at an area at the center of the majority of the consumers, the load center. It is not always possible to locate a regulator at the exact location where the regulation is most needed. Also, the system changes as loads are added and removed over time, and the desired point of regulation may change. However, it may not be feasible to relocate the regulator bank. By having line-drop-compensation devices, the regulation point can be changed without having to physically move a bank of regulators.

In any mode, the regulator monitors a specific voltage and changes taps as needed based on that voltage level and the existing settings. With line-drop compensation, this monitored voltage can be modified in such a way as to simulate the voltage at some point further out on the distribution system. Knowing the peak-load current expected on the line and the size and length of the line to the load center, the voltage drop at the load center due to resistive and reactive components can be calculated. Inside the regulator control, the line-drop-compensation device will model that portion of the system between the load center and the step-voltage regulator. Figure 8.32 shows an example of a power-system voltage profile resulting from a regulator set up with the line-drop-compensation feature.

When line-drop compensation is used, the correct polarity of the resistance and reactance components is necessary for proper regulation. On four-wire wye-connected systems, the polarity selector is always set for $+X$ and $+R$ values. On delta-connected systems, however, the line current is 30° displaced from the line-to-line voltage (assuming 100% PF). On open-delta-connected regulator banks, one regulator is 30° leading, and the other is 30° lagging. On closed-delta regulator banks, all regulators in a given bank will be either leading or lagging. As a result of this displacement, the polarity of the appropriate resistive or reactive element must sometimes be reversed. The setting of the selector switch would be set on the $+X + R$, $-X + R$, or $+X - R$ setting. A number of publications are available from manufacturers to assist in determining the variables needed and the resulting calculations.

8.8 Unique Applications

Most step-voltage regulators are installed in circuits with a well-defined power flow from source to load. However, some circuits have interconnections or loops in which the direction of power flow through the regulator may change. For optimum utility system performance, step-voltage regulators, installed on such circuits, have the capability of detecting this reverse power flow and then sensing and controlling the load-side voltage of the regulator, regardless of the direction of power flow.

In other systems, increasing levels of embedded (dispersed) generation pose new challenges to utilities in their use of step-voltage regulators. Traditionally, distribution networks have been used purely

www.EngineeringEbooksPdf.com

to transport energy from the transmission system down to lower voltage levels. A generator delivering electricity directly to the distribution network can reverse the normal direction of power flow in a regulator. Options in the electronic control of the step-voltage regulator are available for handling different types of scenarios that give rise to reverse power-flow conditions.

Bibliography

Colopy, C.A., Grimes, S., and Foster, J.D., Proper operation of step voltage regulators in the presence of embedded generation, presented at *CIRED Conference*, Nice, France, June 1999.

Cooper Power Systems, How step voltage regulators operate, Bulletin 77006 2/93, Cooper Power Systems, Waukesha, WI, 1993.

Cooper Power Systems, Voltage regulator instruction and operating manuals and product catalogs, Cooper Power Systems, Waukesha, WI.

Cooper Power Systems, Volt/var regulation and optimization workshop, Waukesha, WI.

Day, T.R. and Down, D.A., The effects of open-delta line regulation on sensitive earth fault protection of 3-wire medium voltage distribution systems, Cooper Power Systems, Waukesha, WI, June 1995.

Foster, J.D., Bishop, M.T., and Down, D.A., The application of single-phase voltage regulators on three-phase distribution systems, Paper 94 C2, presented at *IEEE Conference*, Colorado Springs, CO, April 1994.

General Electric Co., Voltage regulator instruction and operating manuals and product catalogs, Shreveport, LA.

IEEE, *Standard Requirements, Terminology, and Test Code for Step-Voltage Regulators*, C57.15–2009, Institute of Electrical and Electronics Engineers, Piscataway, NJ, 2009.

IEEE, *Guide for Loading Liquid-Immersed Transformers and Voltage Regulators*, C57.91, Institute of Electrical and Electronics Engineers, Piscataway, NJ, 2010

Kojovic, L., Impact of DG on voltage regulation, Presented at *Power Engineering Society Summer Meeting, 2002 IEEE*, Chicago, IL, vol. 1, pp. 97–102.

Kojovic, L.A., McCall, J.C., and Colopy, C.A., Voltage regulator and capacitor application considerations in distribution systems for voltage improvements, Systems Engineering Reference Bulletin SE9701, Franksville, WI, January 1997.

Siemens Energy and Automation, Voltage regulator instruction and operating manuals and product catalogs, Jackson, MS.

www.EngineeringEbooksPdf.com

9

Constant-Voltage Transformers

Arindam Maitra
Electric Power Research Institute

Anish Gaikwad
Electric Power Research Institute

Arshad Mansoor
Electric Power Research Institute

Douglas Dorr
Electric Power Research Institute

Ralph Ferraro
Power Quality Solutions, Inc.

9.1 Background **9**-1
History of Constant-Voltage Transformers • What Is a Constant-Voltage Transformer? • The Working of a Constant-Voltage Transformer • Voltage Regulation on the Customer Side • What Constant-Voltage Transformers Can and Cannot Do
9.2 Applications **9**-9
Application Considerations: Sizing Guidelines • Application Considerations: Output Performance under Varying Supply Conditions • Application Considerations: Output Performance under Dynamic Supply Conditions • Application Considerations: CVT Electrical Characteristics during Linear and Nonlinear Loading • Application Considerations: Using Three-Phase Input
9.3 Procurement Considerations **9**-17
What to Look for When Purchasing a Constant-Voltage Transformer
9.4 Typical Service, Storage, and Shipment Conditions **9**-19
9.5 Nameplate Data and Nomenclature **9**-20
9.6 New Technology Advancements **9**-20
9.7 Addendum **9**-21
References **9**-23

9.1 Background

Constant-voltage transformers (CVT) have been used for many years, primarily as a noise-isolation device. Recently, they have found value when applied as a voltage-sag protection device for industrial and commercial facilities. The purpose of this section in the handbook is to give power-system engineers and facility engineers who are unfamiliar with the CVT technology (also known as ferroresonant transformers) the insights and information necessary to determine the types of electric-service-supply events that CVTs can mitigate. Items covered in this chapter include operation, characteristics, applications, specifications, and sizing guidelines of CVTs. The goal here is not to duplicate information currently available but, rather, to collect information into a single location and then supplement it to provide:

Adequate information and procedures to applications personnel in effectively selecting CVTs for voltage-sag ride-through protection

Application notes to demonstrate how CVTs can improve process voltage-sag ride-through

9.1.1 History of Constant-Voltage Transformers

The industrial use of CVTs (also called ferroresonant transformers) goes back to the early 1940s. Living in the United States during the 1930s, Joseph G. Sola, a German-born engineer, discovered the CVT

www.EngineeringEbooksPdf.com

technology [1,2] based on a single transformer rather than an arrangement of transformers, separate filters, and capacitors. This innovation provides several important advantages: its inherent robustness (CVT consists of just three or four windings and a high-reliability capacitor), its imperviousness to continuous short circuits (whether it is turned on into a short circuit or from full load), and its capability to maintain output-voltage stabilization on a cycle-to-cycle basis for significantly large overvoltages and undervoltages.

Sola was both a farsighted inventor and successful businessman. Internationally recognized as the pioneer of transformer magnetics technology, his inventions and subsequent refinements of other electronic equipment were considered revolutionary by the electrical industry. Sola's first transformers for furnace-ignition systems and neon lighting, based on the unique application of ferroresonant principles, led in 1938 to his invention of the CVT. This timely discovery was eagerly accepted by prime military contractors during World War II and established Sola as a world leader in voltage regulation. Sola was awarded a total of 55 U.S. patents during his lifetime, including 5 patents each for CVTs, Solatrons, and electronic power supplies, and 19 patents for high-intensity-discharge lighting ballasts.

Throughout the last six decades, a series of applications has been found for products based on Sola's CVT technology. It is one of the most cost-effective ac power conditioners available.

9.1.2 What Is a Constant-Voltage Transformer?

A well-known solution for electrical "noise" in industrial plants has been the constant-voltage transformer, or CVT (see Figure 9.1).

The typical components of a CVT are shown in Figure 9.2. The magnetic shunt on the central core has the following effects on the core's reluctance. It reduces the reluctance of the core. This can be thought of as introducing more resistance in parallel to an existing resistance. The magnetic shunt in the CVT design allows the portion of the core below the magnetic shunt to become saturated while the upper portion of the core remains unsaturated. This condition occurs because of the presence of the air-gap between the magnetic shunt and the core limbs. Air has a much higher reluctance than the iron core. Therefore, most of the flux passes through the lower portion of the core, as shown by the thick lines in Figure 9.2. In terms of an electrical analogy, this configuration can be thought of as two resistances of unequal values in parallel. The smaller resistance carries the larger current, and the larger resistance carries the smaller current.

FIGURE 9.1 Typical constant-voltage transformer.

www.EngineeringEbooksPdf.com

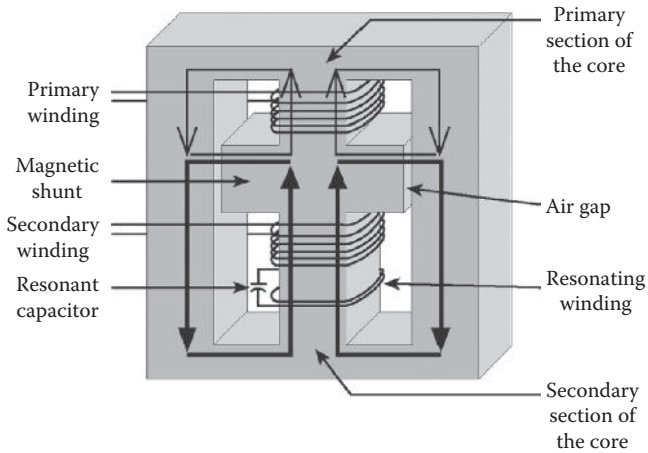

FIGURE 9.2 Components of a typical constant-voltage transformer.

The CVT is designed such that:

- The lower portion of the central limb is saturated under normal operating conditions, and the secondary and the resonating windings operate in the nonlinear portion of the flux-current curve.
- Because of saturation in the central limb, the voltage in the secondary winding is not linearly related to the voltage in the primary winding.

There is ferroresonance between the resonating winding on the saturated core and the capacitor. This arrangement acts as a tank circuit, drawing power from the primary. This results in sustained, regulated oscillations at the secondary with the applied line frequency.

9.1.3 The Working of a Constant-Voltage Transformer

The working of a CVT can be explained with two physical phenomena:

1. Saturation of the ferromagnetic core
2. Ferroresonance

9.1.3.1 Saturation of Ferromagnetic Core

A flux-current curve is shown in Figure 9.3 [3]. In the linear portion of the curve, as the current increases, the magnetic-flux density increases. However, a point is reached where further increases in current yield smaller and smaller increases in flux density. This point is called the saturation point (see Figure 9.3) and is characterized by a dramatic reduction in the slope of the curve. In fact, the curve is no longer linear. Because the slope of the flux-current curve is proportional to the inductance of the coil, the reduction in the slope causes reduction in the inductance. The new inductance may be 100 times less than the inductance in the linear portion of the curve.

As shown on the hysteresis curve in Figure 9.3, the magnitude of current that causes the iron to go into saturation is not the same as the magnitude at which the iron comes out of saturation. The boundary between linear operation and saturated operation is not fixed but, instead, depends on the previous values of that current. The hysteresis phenomenon is a fundamental property of ferromagnetic materials. Hysteresis occurs because of residual flux density stored in the iron that must be overcome when the current changes direction. It should be noted that, for a particular value of flux, there are two values of current for which the core would be in saturation.

www.EngineeringEbooksPdf.com

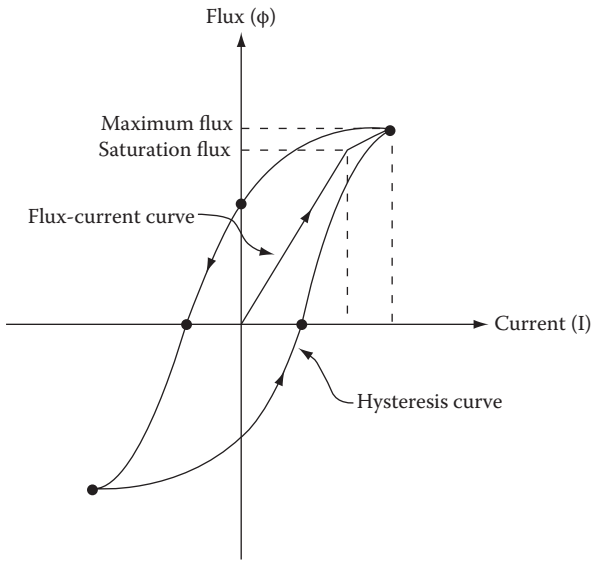

FIGURE 9.3 Flux-current curve with hysteresis curve.

9.1.3.2 Ferroresonance

Most engineers are well versed with linear resonance (referred to simply as resonance). In a circuit, capacitive and inductive reactances (Z_C and Z_L, respectively) are calculated as shown in Equations 9.1 and 9.2. Resonance occurs when the inductive and capacitive reactances of a circuit exactly balance. The resonating frequency is calculated as shown in Equation 9.3.

$$Z_C = \frac{1}{j\omega C} \tag{9.1}$$

$$Z_L = j\omega L \tag{9.2}$$

$$f = \frac{1}{2\pi\sqrt{LC}} \tag{9.3}$$

The inductance value used in Equations 9.2 and 9.3 refers to the unsaturated or linear value of the inductor. However, the case when the core is saturated needs special consideration. If the inductor core is saturated, the relationship between flux (ϕ) and current (I) is no longer linear, and the inductance value is no longer a single value (L). The inductance in the nonlinear portion of the flux-current curve is not fixed and cannot be represented by a single value. Once the ferromagnetic inductance "enters" into saturation, it remains saturated until the current magnitude reduces. If the inductance when saturated causes a resonance (i.e., results in an inductive reactance that matches the capacitive reactance in the circuit), this phenomenon is called "ferroresonance." At the ferroresonance point, the current magnitude can increase dramatically, further driving the iron into saturation. If the current is constantly fed (as happens in a CVT), a stable resonant point is obtained [4]. If, at ferroresonance, the inductor value is L_S, the resonant frequency (f_S) is given by Equation 9.4.

$$f_S = \frac{1}{2\omega\sqrt{L_S C}} \tag{9.4}$$

www.EngineeringEbooksPdf.com

It should be noted that $L_S \ll L$. The ferroresonant frequency can be either system frequency or a subharmonic of it. (Note: See Section 9.7 for tutorial description of a ferroresonant circuit.) If the current (I) drops below the saturation point, the inductance L_S "comes" out of saturation and the value changes back to L. Again, magnetic hysteresis causes the precise points where the inductor goes into and out of saturation to be different.

The salient features of ferroresonance are:

- Resonance occurs when the inductance is in saturation.
- As the value of inductance in saturation is not known precisely, a wide range of capacitances can potentially lead to ferroresonance at a given frequency.
- More than one stable, steady-state response is possible for a given configuration and parameter values [5].

A schematic of a CVT is shown in Figure 9.4.

In the ferroresonant circuit of a CVT, more than one steady-state response is possible for a given configuration and parameter values. This phenomenon (referred as "jump resonance") is described next.

The y-axis in Figure 9.5 is the CVT's output voltage at the secondary terminals, while the x-axis is the CVT's input primary voltage. There are three possible modes of behavior, depending on the level of the

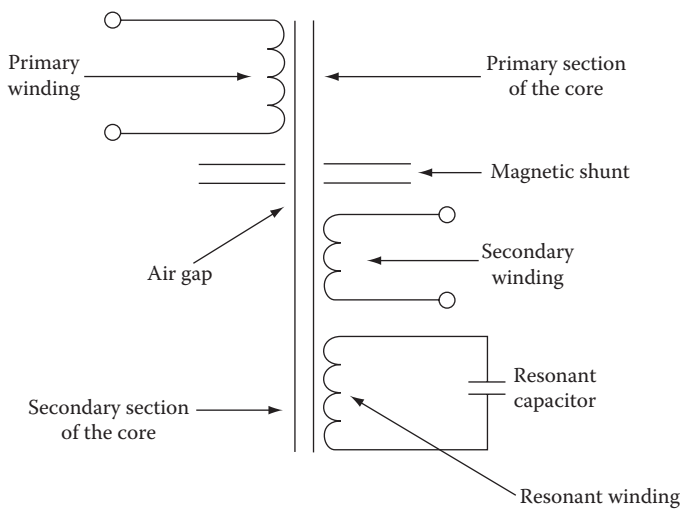

FIGURE 9.4 Schematic of a constant-voltage transformer.

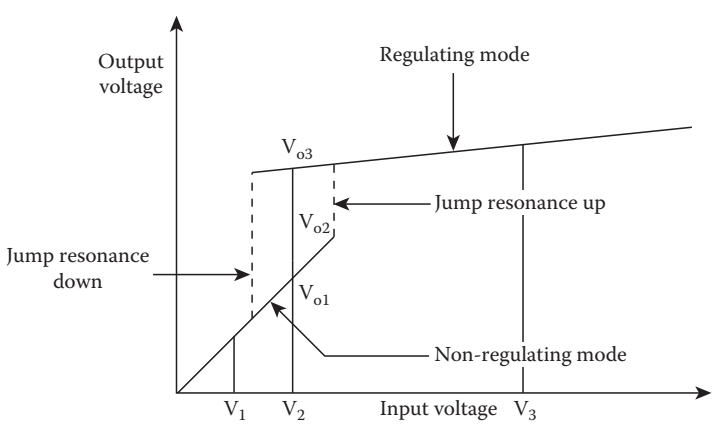

FIGURE 9.5 Output voltage versus input voltage for constant-voltage transformer with jump resonance.

www.EngineeringEbooksPdf.com

input voltage. At input voltage V_1, the CVT operates in nonsaturation mode. The secondary responds linearly to the primary supply. Note that this mode is used in a conventional transformer but is undesirable in a CVT.

At input voltage V_2, there are three outputs denoted by V_{o1}, V_{o2}, and V_{o3}. Outputs V_{o1} and V_{o3} are both stable states. Output V_{o1} corresponds to the normal state, whereas V_{o3} corresponds to ferroresonant state. Output V_{o2} is an unstable state that cannot be obtained in practice. Whether CVT output is V_{o1} or V_{o3} depends on the initial value of residual flux and voltage at the capacitor terminals. The phenomenon where the output voltage either suddenly changes to the regulating mode of operation at some value of the ascending input voltage, or suddenly drops out of the regulating mode of operation with descending input voltage, is called jump resonance [6]. The jump resonance is a factor during dynamic supply-voltage conditions. This is discussed in detail when the applications of a CVT are considered (Section 9.2). At input voltage V_3, the CVT operates in ferroresonant mode. The CVT must operate in this mode for proper operation.

9.1.4 Voltage Regulation on the Customer Side

The purpose of a voltage regulator is to maintain constant output voltage to the load in the face of variations of the input line voltage. These line variations are caused by; steady state voltage drops as load current on a power system varies, transient voltage drops during parallel load startup, and voltage drops due to temporary faults on parallel circuits attached to the common power source. A good design goal to mitigate the effects of the majority of voltage fluctuations would be plus and minus twenty percent of the system nominal voltage however, that is usually not economically feasible for end-use equipment. In fact, some of the more sensitive electronic equipment contain requirements based on the duration as shown in Figure 9.6. This is just one example of a design objective for power variations and there are other certainly other process components and equipment designs that may be even more sensitive than what is shown in the figure. When a mismatch between the supply voltage and the equipment withstand is identified, it is usually prudent to implement voltage regulation at the end-user's equipment level and the CVT is an excellent option for providing that regulation.

Many of the present voltage-regulation technologies can also provide mitigation of other power-quality problems (e.g., voltage-sag ride-through improvement or isolation for transient overvoltages). There are seven basic devices in use today. These include:

- Motor-actuated voltage regulator—Generally inexpensive, these devices can handle high kVA loads, but they are slow to respond to changes in the electric-service supply and can only correct for gradual load changes. See Chapter 8.
- Saturable reactor regulator—Relatively inexpensive and with a wide load-kVA range, these devices have a sluggish (5–10 cycles) response time, high output impedance, and are sensitive to a lagging-load power factor.
- Electronic tap-changing transformers—These devices use triacs or silicon-controlled rectifiers to change taps quickly on an autotransformer. They respond in 0.5 cycle and are insensitive to load power factor and voltage unbalances.
- Automatic voltage regulator—These devices function as an uninterruptible power supply with no energy storage. They have a fast response time (1–2 ms), but the need for a fully rated 60 Hz transformer can make their cost unacceptably high.
- Hybrid electronic voltage regulator—These devices use a series transformer and a power converter to accomplish the voltage-regulation function.
- Soft-switching automatic voltage regulator—These devices combine the high performance of active line filters with the lower cost of the more-conventional solutions. The electromagnetic interference generated by these units is low in spite of the high-frequency switching employed.
- CVT (ferroresonant transformers)—Appropriate application of a CVT can handle most low-frequency disturbances, except for deep sags or outages. Detailed descriptions of these devices are provided in the subsequent sections.

www.EngineeringEbooksPdf.com

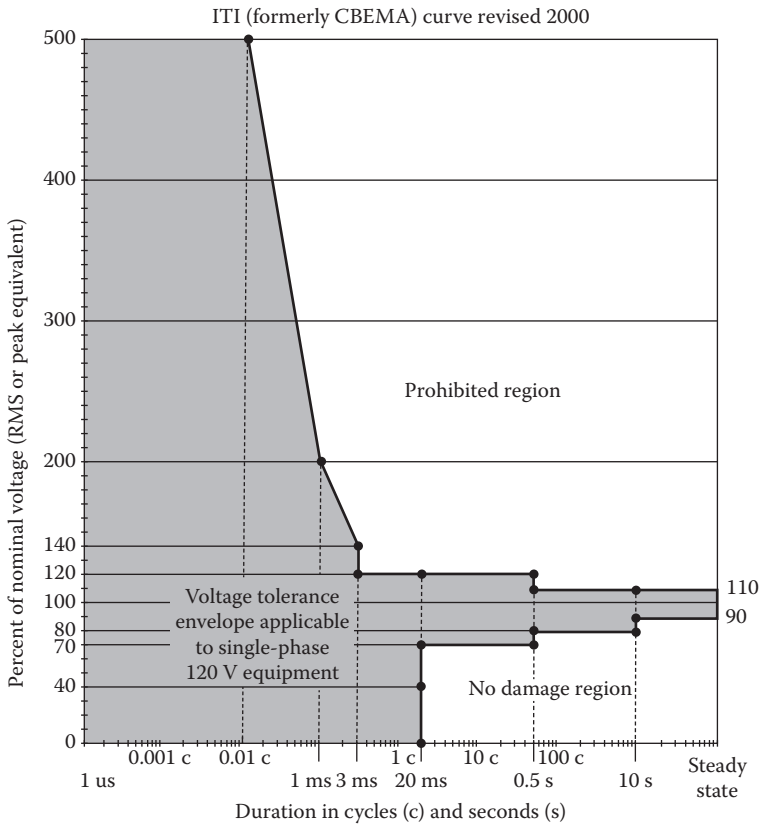

FIGURE 9.6 Voltage-tolerance envelope specified by the CBEMA. (Reproduced from Dorr, D., Evolution of the new CBEMA curve, PQ/PCIM 1996 Conference Proceedings, Long Beach, CA; IEEE Std 1100-2005, Recommended Practice for Powering and Grounding Electronic Equipment, Institute of Electrical and Electronics Engineers, Piscataway, NJ, 2005, p. 41.)

9.1.5 What Constant-Voltage Transformers Can and Cannot Do

CVTs are attractive power conditioners because they are relatively maintenance-free; they have no batteries to replace or moving parts to maintain. They are particularly applicable to providing voltage-sag protection to industrial process-control devices such as programmable logic controllers (PLC), motor-starter coils, and the electronic control circuits of adjustable-speed drives.

Ongoing research [7] has demonstrated power-quality attributes of CVTs that include filtering voltage distortion and notched waveforms. Figure 9.7 depicts typical distorted and notched input voltages versus the filtered CVT output. Also, a CVT can practically eliminate oscillating transients caused by capacitor switching and can significantly dampen impulsive transients caused by lightning (see Figure 9.7).

To ensure full protection of sensitive electronic loads, CVTs may need to be coupled with other devices designed to mitigate dynamic disturbances. In addition, CVTs have been used for years for voltage isolation as well. Many plants install CVTs for voltage regulation. CVTs also offer protection for voltage swells. If properly sized, a CVT can regulate its output voltage during input voltage sags to 60% of nominal voltage for virtually any duration (see Figure 9.8).

However, many commercial and industrial facilities are not aware of most of the CVT's attractive features. At the same time, the CVT technology also has some negative characteristics, which in some applications may possibly outweigh its benefits. Some of these include:

www.EngineeringEbooksPdf.com

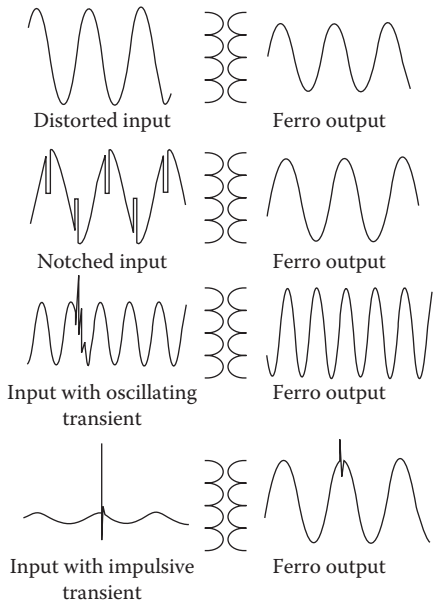

FIGURE 9.7 Filtering ability of a constant-voltage transformer.

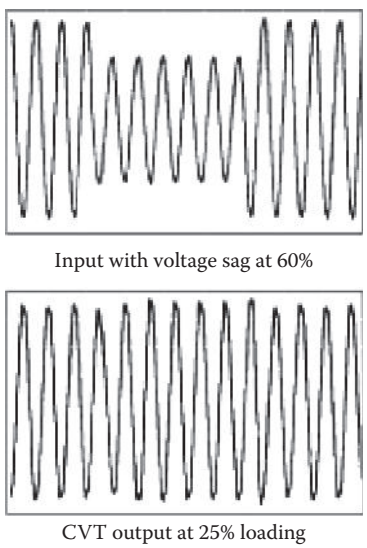

FIGURE 9.8 Voltage regulations with a CVT during a voltage sag to 60%.

- CVTs are not effective during momentary voltage interruptions or extremely deep voltage sags (generally below 50% of nominal).
- Because CVTs have relatively high output impedance, they produce large output drops during high current demands. As a result, conventionally sized CVTs cannot handle significant changes in current and are more attractive for constant, low-power loads.
- Because CVTs are physically large devices, it is not always practical to install this type of device in either a small-office or home environment.
- CVTs produce heat and noticeable operating hum and are sensitive to line-frequency variations.
- CVTs can have relatively poor efficiency and high losses for light loading conditions.

www.EngineeringEbooksPdf.com

9.2 Applications

CVT have proven to be a reliable means of enhancing voltage-sag tolerance of industrial process-control elements such as relays, contactors, solenoids, dc power supplies, PLCs, and motor starters. As mentioned earlier, while the CVT tends to work well for voltage sags, they are not a good solution for momentary interruptions. Additionally, there are sizing and fault-protection issues associated with proper application of the CVT, particularly when the output loads demand high-inrush starting currents. Specific issues that will be addressed in the subsequent sections include:

- Relationship between CVT input and output voltage under steady-state and dynamic supply conditions
- Relationship between CVT sizing and load size to enhance sag tolerance of a given load
- Impact of load inrush current on CVT sizing; output performance during various loading conditions
- Effect of different vendor designs in enhancing voltage-sag ride-through; three-phase designs versus single-phase designs

9.2.1 Application Considerations: Sizing Guidelines

Because the type of loads connected to a single CVT can range widely, the startup and steady-state operational characteristics of each load must be well understood before deciding on the appropriate power rating of a CVT. A load draws inrush current when it is first turned on or when it cycles on and off during normal process operation. If a CVT is sized [8] without considering the inrush currents of all connected loads, the CVT may be inadequately sized for the inrush current. Thus, during the startup or cycling of a connected load, the CVT output voltage may sag, causing other sensitive loads connected to the same CVT output voltage to shut down.

The ability of a CVT to regulate its output voltage is generally based upon two characteristics of the connected loads, both of which are related to current and both of which must be determined to properly size a CVT. The first characteristic is the amount of steady-state current drawn by all connected loads during their normal operation. As shown in Figure 9.9, the lower the ratio between the actual current drawn by the connected loads and the rated current of the CVT, the better the CVT can regulate its output voltage during dynamic load-switching events. As an illustration, a 1 kVA CVT loaded to 1 kVA will not mitigate voltage sags nearly as well as the same CVT loaded to 500 VA, and performance is even

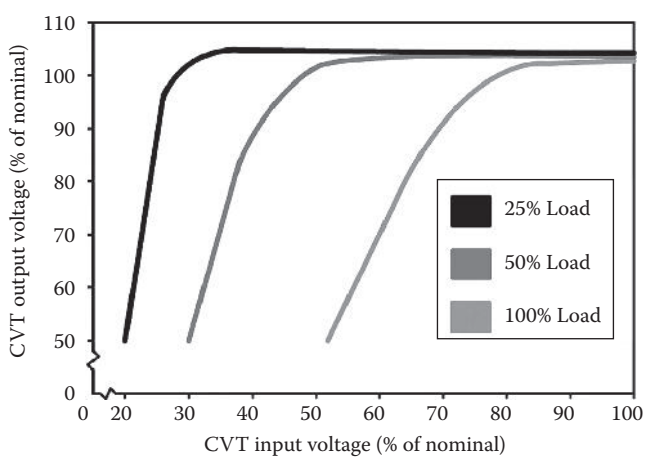

FIGURE 9.9 Typical performance of a CVT as a function of load; as the CVT load increases, the ability of the CVT to regulate its output voltage decreases.

www.EngineeringEbooksPdf.com

better if the same 1 kVA CVT is only loaded to 250 VA. Moreover, according to results of CVT testing at the Electric Power Research Institute's Power Electronics Application Center (known as EPRI PEAC), a CVT rated at less than 500 VA may not be able to handle even moderate inrush current. Therefore, a minimum CVT rating of 500 VA is recommended.

The second characteristic of a CVT load is the load's inrush current. Values for inrush current and steady-state current of the connected loads will enable a CVT to be properly sized.

A procedure to find the proper CVT size is described below:

1. Measure or estimate the total steady-state current drawn by the load and multiply this value by the circuit voltage to get steady-state VA. For optimum regulation during input-voltage sags, the VA rating of the CVT should be at least 2.5 times the steady-state VA calculated.
2. Measure the highest peak inrush current and multiply this value by the circuit voltage to get the worst-case inrush VA for all loads. For good sag regulation of the CVT output voltage during load starting or cycling, the VA rating of the CVT should be at least half of the maximum inrush VA. Recommended size of the CVT is based upon the larger of the two VA-rating calculations.
3. Add together all the steady-state currents and then multiply the resulting value by the circuit voltage to get the combined steady-state VA of all CVT loads. Then, select the highest peak-inrush-current measurement and multiply this value by the circuit voltage to get the worst-case inrush VA for all loads. For optimum regulation during input-voltage sags, the VA rating of the CVT should be at least 2.5 times the steady-state VA. For example, if the steady-state VA calculation is 490 VA, then the recommended size of the CVT would be 1225 VA or more. For good sag regulation of the CVT output voltage during load starting or cycling, the VA rating of the CVT should be at least half of the maximum inrush VA calculated. For example, if the maximum inrush VA is 3.49 kVA, then the optimum size of the CVT would be 1.75 kVA or more. A typical sizing worksheet for CVTs with measured data and calculations is shown in Table 9.1.

TABLE 9.1 Typical Sizing Worksheet for a Constant-Voltage Transformer

CVT Circuit or Load	Measured Steady-State Current, A (rms)	Measured Peak Inrush Current, A (1 ms)
Programmable logic controller	0.16	14.8
Programmable logic controller	0.36	10.8
5-, 12-V power supply	1.57	29.1
24-V power supply	1.29	14.4
NEMA size 3 motor starter	0.43	9.9
NEMA size 0 motor starter	0.13	3.1
Ice-cube relay	0.05	0.2
Master control relay	0.09	1.8
	Computational section	
Sum of steady-state rms currents	4.08	
Circuit voltage	×120	
Steady-state load VA	=490 × 2.5 = 1225	
Highest peak inrush current	29.1	
Circuit voltage	×120	
Inrush load VA	=3492 × 0.5 = 1746	

Note: Use the larger of the steady-state load VA (1225 in this example) and the inrush load VA (1746 in this example) to determine the CVT size.

www.EngineeringEbooksPdf.com

9.2.2 Application Considerations: Output Performance under Varying Supply Conditions

A series of structured tests have been performed using a 1000 VA, 120 V, single-phase CVT. The following results of these tests provide insight on the operational characteristics of CVTs. These tests were designed to characterize the regulation performance of a CVT during amplitude and frequency variations in the ac input voltage and to determine its ability to filter voltage distortion and notching. The tests were performed at the EPRI PEAC power-quality test facility [9]. The CVT was energized for more than 30 min before each test to stabilize its temperature.

9.2.2.1 Performance: Regulation

The CVT was tested for its ability to regulate variations in input voltage amplitude at both half- and full-load levels for the three load types given in Table 9.2. The mixed nonlinear load was a combination of purely resistive loads and a 187 VA nonlinear load with a 0.85 power factor, resulting in a composite true power factor of 0.99. The amplitude of the ac input voltage was varied from 96 Vac (80% V nominal) to 144 Vac (120% V nominal) in 6 V increments.

The input voltage and resulting output voltage of the CVT for each load type are shown in Figure 9.10. The ferroresonant transformer effectively reduces or eliminates the effects of several kinds of voltage

TABLE 9.2 Characteristics of Load Type Used in the Test

	Load Type					
	Resistive		Resistive/Inductive		Mixed Nonlinear	
Measured Characteristic	Half Load	Full Load	Half Load	Full Load	Half Load	Full Load
Apparent power, VA	435	953	475	948	603	993
True power factor	1.00	1.00	0.79	0.79	0.99	0.99
Displacement power factor	1.00	1.00	0.80	0.79	1.00	1.00

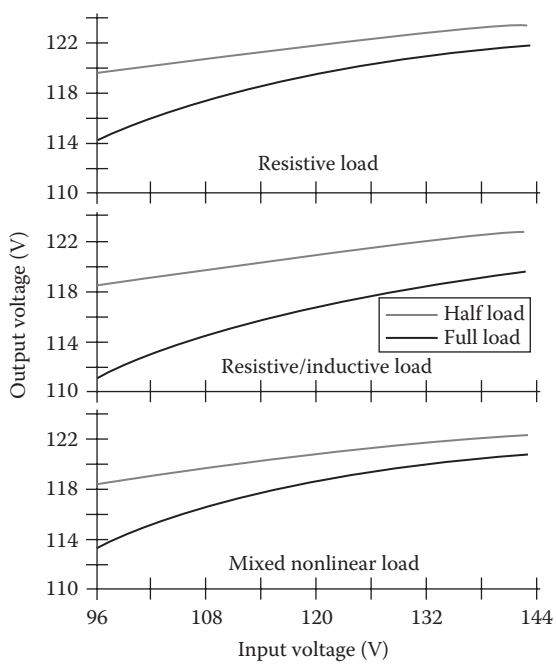

FIGURE 9.10 Output-voltage regulation with varying input ac voltage.

www.EngineeringEbooksPdf.com

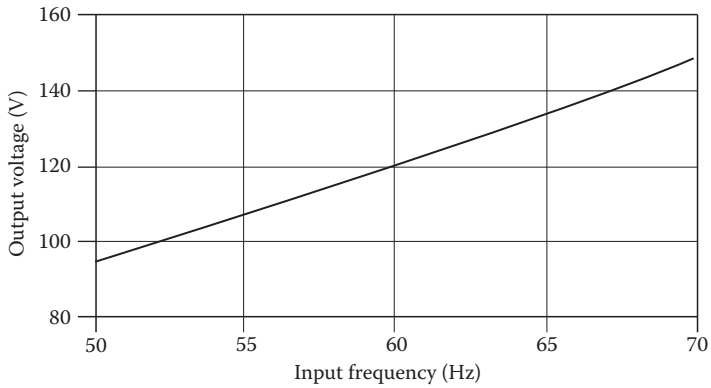

FIGURE 9.11 Output-voltage amplitude resulting from variations in frequency of the ac input voltage.

variations in the electric-service supply. When the amplitude of the input voltage was varied ±20%, the fully loaded transformer had an output voltage well within ANSI-C84.1 limits (from +6% to −13%).

9.2.2.2 Performance: Frequency

The CVT was half loaded with a purely resistive load. While the input voltage was fixed at 120 V, the frequency of the ac input voltage was varied from 50 to 70 Hz in 1 Hz increments. The output voltage amplitude changed proportionally with the changed in input frequency, ranging from 80% V nominal voltage at 50 Hz to 120% V nominal voltage at 70 Hz (see Figure 9.11).

9.2.2.3 Performance: Harmonics

To test the ability of the transformer to filter out harmonics, a distorted input voltage (15.29% V total harmonic distortion [THD]) with 15.1% third-harmonic content was applied. The resulting output harmonic distortion was 2.9%, with mostly fifth-harmonic content (2.3%). The distorted input voltage and the filtered output voltage is shown in Figure 9.12.

9.2.2.4 Performance: Notching

A notched voltage was applied to the input of the fully loaded transformer. As shown in Figure 9.12, the transformer successfully filtered the notched input voltage.

9.2.3 Application Considerations: Output Performance under Dynamic Supply Conditions

The objective of this application was to characterize the CVT performance during power system disturbances such as momentary interruptions, sags, phase shifts, capacitor switching, and lightning strikes [10]. The CVT was connected to a full, purely resistive load.

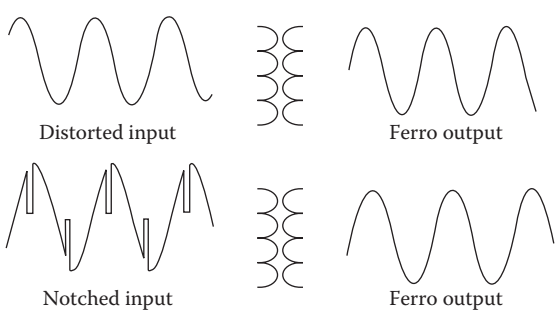

FIGURE 9.12 Output voltages resulting from distorted and notched input voltages at full load.

www.EngineeringEbooksPdf.com

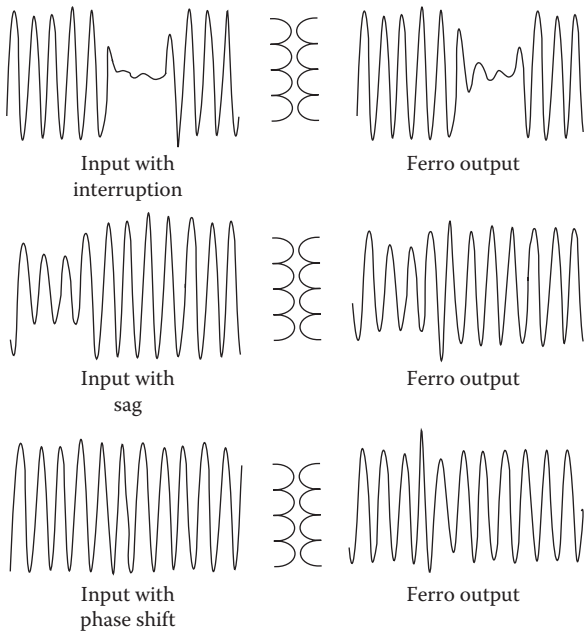

FIGURE 9.13 Output voltages (labeled ferro-output) resulting from voltage interruption, sag, and phase shift on the input.

9.2.3.1 Performance: Voltage Interruption

The CVT was subjected to voltage interruptions lasting from 0.5 to 5 cycles and adjusted in 0.5 cycle increments. Switching from the normal supply voltage source to an open circuit created each interruption. The input and output voltages of the transformer during a three-cycle interruption are shown in Figure 9.13.

During the three-cycle interruption, the CVT dropped out of the regulating mode (refer to jump resonance shown in Figure 9.5), and the output voltage decreased as the resonant capacitor in the CVT discharged. When the input voltage returned to normal, an overshoot occurred on the output voltage as the resonant capacitor recharged. Note that the CVT does not act as an uninterruptible power supply, which is designed to eliminate the effect of an interruption on the electric service supply, but it does slightly decrease the effect of an interruption by reducing it to a deep voltage sag. In conclusion, a CVT can moderately mitigate, but not eliminate, the effects of momentary voltage interruptions.

9.2.3.2 Performance: Voltage Sag

To simulate a fault in the load's electric-service supply, the input voltage to the CVT was decreased to 90%, 70%, and 58% of nominal voltage for one, two, three, four, and five cycles. The variations in the output voltages were measured and recorded for each of the applied voltage sags. Figure 9.13 shows the CVT's input and output voltage waveforms down to 58% nominal voltage for sags lasting three cycles. In general, the input voltage sags produced output voltage sag having approximately the same duration but smaller sag depth. For example, during the nominal voltage sag to 58%, the CVT stayed in the regulation mode and reduced the effect of the sag to approximately 20% of nominal voltage lasting three cycles. Again, the recharging of the resonating capacitor caused an overshoot when the input voltage returned to normal.

9.2.3.3 Performance: Voltage Phase Shift

To simulate the effects of a large load being switched off near the end of a long electric-service supply feeder, the input voltage of the CVT was shifted forward 10° while the input and output voltages were monitored and recorded. The phase shift occurred at the positive peak of the input voltage

www.EngineeringEbooksPdf.com

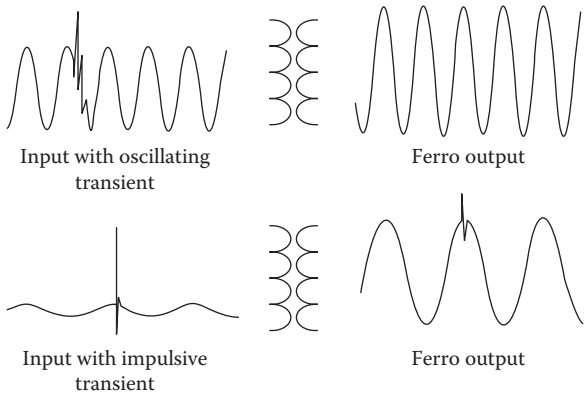

FIGURE 9.14 Output voltages resulting from oscillating and impulsive transients in the input voltages.

(see Figure 9.13). The resulting phase shift in the input voltage caused the output voltage to briefly swell. The CVT is sensitive to voltage phase shifts in the electric-service supply.

9.2.3.4 Performance: Oscillating Transient

A transient caused by capacitor switching was simulated with a 500 Hz ring wave with a peak magnitude of 1 per unit and duration of 10 ms. The ring wave was applied to the positive peak of the input voltage. Figure 9.14 shows the input voltage with the ring-wave transient and the output voltage with a small impulsive transient.

9.2.3.5 Performance: Impulsive Transient

To simulate a lightning strike, a 2 kV, 1.2/50 μs combination wave (as described in ANSI C62.41-1991) was applied to the positive peak of the input voltage. As shown in Figure 9.14, the CVT significantly damped and filtered the surge.

9.2.4 Application Considerations: CVT Electrical Characteristics during Linear and Nonlinear Loading

The objective of this application was to characterize the CVT as a load while the CVT supplied a simple linear load and while it supplied a complex nonlinear load [11]. In the following tests, the CVT was connected first to a simple linear load and then to a complex nonlinear load. An electric-service supply source with an average THD in the voltage of 3% supplied power to the CVT during all tests.

9.2.4.1 Performance: Line Current Distortion

A resistive linear load consisting of incandescent lamps was connected to the output of the CVT. The load was increased in 10 equal increments from 0 to 8.3 A (output current rating of the CVT). Next, a bridge rectifier (such as the type that might be used in electric-vehicle battery chargers) was connected to the CVT. The rectifier and its resistive load (incandescent lamps) were the complex nonlinear load of the CVT. By adding lamps, this complex load was increased in 10 equal increments from approximately 0.4 A (rectifier with no lamps connected) to 8.3 A. Figures 9.15 and 9.16 show the line-current distortion during these tests compared with the line-current distortion for the same loads connected directly to the electric-service supply. At no load, the power consumption of the CVT was approximately 120 W (core losses only). With the full linear load, total losses increased to approximately 134 W (core losses plus load losses); with the full nonlinear load, total losses dropped to approximately 110 W.

Notice in Figures 9.15 and 9.16 that, while the y-axis current-distortion magnitudes are significantly different, the absolute current-distortion values of the CVT's input current with either linear or nonlinear load is nearly identical. Current distortion at the CVT's input terminals was practically independent

www.EngineeringEbooksPdf.com

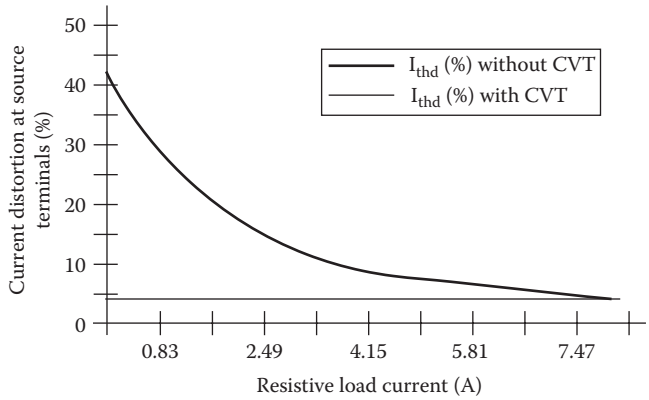

FIGURE 9.15 Line-current distortions for a linear load.

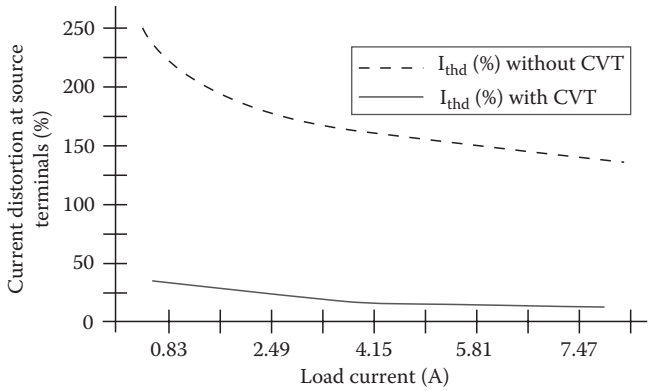

FIGURE 9.16 Line-current distortions for a nonlinear load.

of the type of load connected to the output (approximately 40% at no loading to approximately 5% at full loading). When a linear, low-distortion load was connected to the CVT output, the CVT contributed to the current distortion at its input terminals from the electric-service power source, particularly during low loading. When a nonlinear, high-distortion load was connected, the CVT substantially reduced load-current distortion. When fully loaded, the CVT had relatively small power consumption and an efficiency of 85%–90%. As opposed to most voltage regulators, the losses of the CVT decreased as the nonlinear load increased. The CVT also significantly affected the power factor of the load.

9.2.4.2 Performance: Power Factor

For both linear and nonlinear loads, the size of the load affected the input power factor of the CVT. While the CVT was loaded at less than 40%, of its output power rating (approximately 3.3 A), the power factor ranged from 0.65 to 0.95. While the CVT was loaded at greater than 40%, the power factor was greater than 0.95 for the linear load and greater than 0.90 for the nonlinear load. For the linear load, the power factor crossed from lagging to leading at approximately 60% load (approximately 5 A). Figures 9.17 and 9.18 show the power factors for the linear and nonlinear load (without and with the CVT), respectively. The CVT significantly affected the power factor of the load. At low loading, the nonlinear load without the CVT had a power factor as low as 0.44. With the CVT, the total power factor of the nonlinear load ranged from 0.61 to near unity. However, when loaded at less than 50%, the CVT significantly reduced the power factor for the linear, resistive load, which normally has a unity power factor. Note that in most CVT applications, the aggregate facility loading is significantly small, so it would not

www.EngineeringEbooksPdf.com

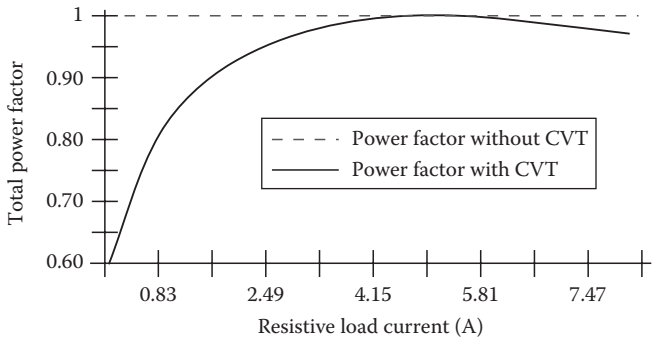

FIGURE 9.17 Power factor for a linear load.

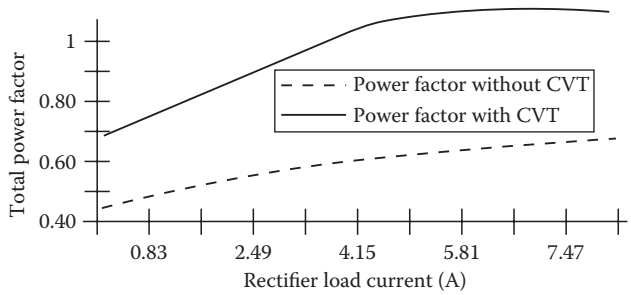

FIGURE 9.18 Power factor for a nonlinear load.

be prudent to attempt any power-factor correction at individual CVT operating loads. Power-factor-correction initiatives should be accomplished at the electric service meter of the facility.

9.2.5 Application Considerations: Using Three-Phase Input

One of the drawbacks of using a CVT is its inability to protect equipment from voltage interruptions. A traditional CVT can protect equipment down to approximately 40% of nominal voltage. A company in the Midwestern United States has introduced a prototype CVT that protects equipment from deep voltage sags and brief power interruptions. As shown in Figure 9.19, the RTT is designed to protect

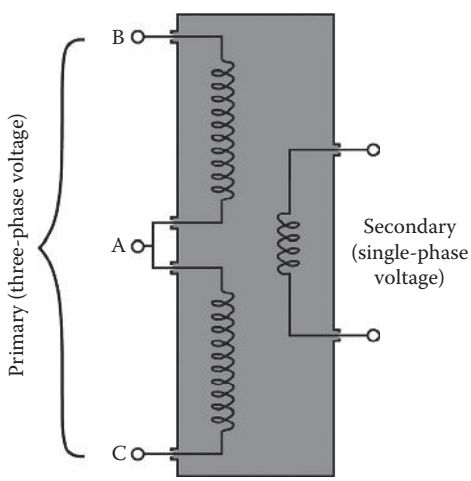

FIGURE 9.19 Schematic of a ride-through transformer (RTT).

www.EngineeringEbooksPdf.com

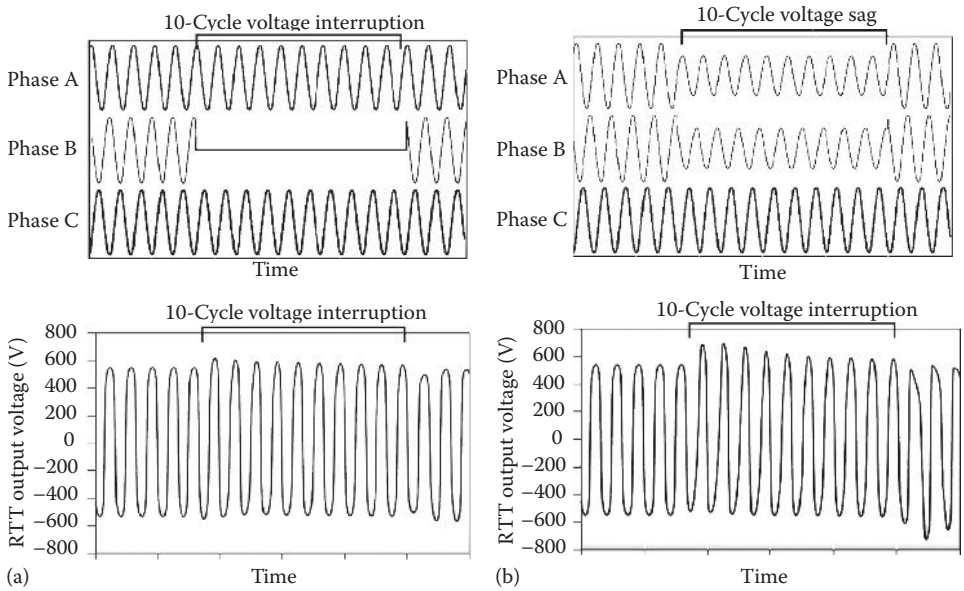

FIGURE 9.20 (a) Performance of a RTT during a 10-cycle voltage interruption and voltage sag. Voltage regulation of an RTT during a single-phase voltage interruption (top: input; bottom: output). (b) Performance of a RTT during a 10-cycle voltage interruption and voltage sag. Voltage regulation of an RTT during a two-phase 10-cycle voltage sag to 60% of nominal (top: input; bottom: output).

single-phase process controls. Unlike traditional CVTs, the RTT uses all three phases of supply voltage as its input. This enables the RTT to access energy in unsagged phases of the supply voltage during one- or two-phase voltage sags and interruptions.

EPRI tested the prototype, 1 kV, 480 V RTT [12] to determine its ability to protect process controls during single-phase, two-phase, and three-phase voltage sags and interruptions. The particular prototype acquired for testing was connected to a load bank that consisted of a mixture of 12 industrial control components: ice-cube relays, motor starters, contactors, a PLC, a linear dc power supply, and a switch-mode power supply.

The test results revealed that the prototype RTT protected the connected process controls from most of the applied voltage sags and interruptions. Besides, it was observed that RTT performance greatly depended on the phase configuration (that is, single-, two-, or three-phase) of the voltage sags or interruption and, to a much lesser extent, on the loading of the RTT output. It was observed that the RTT performed like a typical CVT during three-phase voltage sags. Figure 9.20a and b shows the response of an RTT to phase-to-neutral and phase-to-phase sags.

To get the most out of a CVT with a three-phase input, the most trouble-free voltage phases of the electric-service supply will have to be determined. For example, if most voltage sags occur on phase A or B, then the center tap on the transformer primary should be connected to phase C. Although this prototype transformer promises to retail at a price substantially higher than the price of a traditional, single-phase CVT, the price differential can be greatly reduced by a reduction in size. Because the performance of a traditional CVT greatly depends upon loading, CVTs are often oversized for the connected load. A smaller but more loaded RTT should be able to perform as well as the derated, traditional CVT.

9.3 Procurement Considerations

This section describes what to look for when purchasing CVTs; typical prices of various CVT ratings; and typical sizes, weights, efficiencies, and service conditions of CVTs.

www.EngineeringEbooksPdf.com

9.3.1 What to Look for When Purchasing a Constant-Voltage Transformer

Most CVT manufacturers guarantee their products will meet their published specifications [2]. In general, most CVTs are specified to recognized industrial standards, and under well-defined conditions (agreed to by the CVT manufacturer) they may be capable of operating outside their published limits. Although CVTs are highly reliable and are effective at stabilizing variations in the electric-service supply, it would be prudent to review the following application issues with each CVT manufacturer before purchasing a CVT.

9.3.1.1 Effect of High Input and High Output Voltages upon Operation of Input Protection Devices

Establish the proper input fuse and/or circuit-breaker rating required for the application. Identify with the CVT manufacturer what the maximum primary rms current is under secondary short-circuit conditions for determining the rating of the fuse or circuit breaker. Be aware that sizing fuses and circuit breakers for conventional transformers is not applicable when sizing fuses and/or circuit breakers for CVTs. This is because CVTs are high-impedance units (typically 10 times higher than a control transformer) compared with the equivalent-rated conventional transformer. Therefore, it is essential that the guidelines in the CVT manufacturer's specification should be consulted before finalizing the fuse sizing and/or circuit-breaker rating requirements.

With the correct input fuse or circuit breaker, the application should work fine until the protection opens at approximately 150% of the nominal input voltage. In some cases, after the circuit protection opens, the CVT's output voltage will rise with increasing input at approximately 20% of the increase (that is, the output voltage may go up 1% for each 5% the input voltage rises). This situation may "overvoltage" the load you want to protect. That's why this issue should be discussed with each CVT manufacturer.

9.3.1.2 Operating at Low Input Voltage

If the CVT is operated at significantly lower input voltage continuously, the output voltage will sag as the input voltage sags. Underloading the CVT unit will greatly improve the output voltage performance of the CVT. Discuss with each CVT manufacturer to what extend the CVT would have to be "underloaded" to prevent this situation from occurring.

9.3.1.3 Nonsinusoidal Input Voltage

If the correct pure fundamental-frequency voltage is applied to the CVT, it will operate. Also, most CVTs can tolerate an input-voltage THD up to 25% or even a square-wave input for short-term durations. Discuss with each CVT manufacturer how their CVT will perform with various levels of voltage THD versus application duration. It would also be good to request the CVT's range of input-frequency variance versus the CVT's output-voltage variance characteristics.

9.3.1.4 Overloading

Depending on the actual level of the CVT's input voltage, the CVT may deliver up to 50% more power than specified. Beyond this level, the CVT will protect itself by reducing the output voltage progressively until it reaches nearly zero. The CVT can be operated into a short circuit indefinitely. Whether the CVT can handle the inrush current of any single load or group of loads will depend on the sequencing of the loads and the aggregate inrush-current level. To establish the proper CVT rating for the intended application, discuss both the steady-state and dynamic inrush-current profiles with each CVT manufacturer.

9.3.1.5 Non-Unity-Power-Factor Loads

Linear inductive loads depress the CVT's output voltage and can usually be corrected by adding load capacitors. Linear capacitive loads have the opposite effect on CVTs. If the loads are nonlinear, ask each CVT manufacturer how its CVT will be affected.

www.EngineeringEbooksPdf.com

9.3.1.6 Switching Loads

Ordinary switched-mode power supplies (SMPS) are particularly suited to be used with most CVTs. But when CVTs have "self-adjusting" arrangements, care must be taken because problems could arise with some dimmer or phased-controlled load circuits. In these kinds of applications, each CVT manufacturer should specifically document its CVT product's performance regarding the CVT's compatibility with dimmer and phased-controlled loads.

9.3.1.7 Low-Ambient-Temperature Performance

Most CVTs can tolerate ambient temperatures down to 0°C. Lower than 0°C, the capacitor becomes the limiting factor. If the ambient temperature of the intended CVT application is less than 0°C, discuss the application with each CVT manufacturer on what CVT modifications are possible for operating the CVT at less than 0°C.

9.3.1.8 High-Ambient-Temperature Performance

Most CVTs can tolerate ambient temperatures up to 50°C. Short-term operation at temperatures up to 70°C may be possible. Again, the capacitor becomes the limiting factor. If the intended CVT application is at temperatures higher than 50°C, discuss the application with each CVT manufacturer on what CVT modifications are possible for operating the CVT at greater than 50°C. Note that most CVT manufacturers report that for every 5°C above 50°C, expect the life expectancy of the CVT to be halved from the calculated 300,000 h mean time before failure (MTBF).

9.3.1.9 High-Humidity Performance

Most CVTs can operate at 90% relative humidity without problems. If the CVT has been stored at 100% relative humidity, it probably will require drying out before starting up. Discuss with each CVT manufacturer its proposed procedures for drying out CVTs and the consequences of operating the CVT continuously at relative humidity greater than 90%.

9.3.1.10 Failed-Capacitor Performance

If the CVT unit has several capacitors and one fails, the CVT may still provide reduced power. Shorted capacitors will stop the CVT's operation, but open-circuit capacitor failures can be tolerated. Problems will occur at CVT turn-on if the unit is operated at high input voltage and light loads when a capacitor has failed. If the CVT makes a "humping" or "motor-boating" noise, the CVT should be turned off and then on again. The effects of failed capacitors on each manufacturer's CVT may be different, so request each manufacturer to explain the CVT's operating scenario under a failed-capacitor condition.

9.4 Typical Service, Storage, and Shipment Conditions

Table 9.3 lists typical service conditions for ambient temperature, relative humidity, altitude, and type of cooling. If forced-air cooling is available or required, the direction of airflow, velocity, temperature, and

TABLE 9.3 Service Conditions

Service Conditions	Range
Ambient temperature	0°C–50°C
Relative humidity	20%–90%
Altitude	0–1500 m
Type of cooling	Convection cooling is assumed

www.EngineeringEbooksPdf.com

TABLE 9.4 Storage Conditions

Storage Conditions	Range
Storage temperature	−40°C to +60°C
Relative humidity	5%–90%
Altitude	0–2000 m

TABLE 9.5 Shipment Conditions

Shipment Conditions	Range
Temperature	−55°C to +60°C
Relative humidity	5%–95%
Altitude	0–12,000 m

volume flow per minute at the CVT are included in the specification. For liquid-cooled units, the type of coolant, rate of flow, and the inlet coolant temperature range are specified.

Table 9.4 lists storage temperature, relative humidity, and altitude ranges for a typical CVT.

Table 9.5 lists shipment conditions as it relates to temperature, relative humidity, and altitude ranges for a typical CVT.

9.5 Nameplate Data and Nomenclature

The following are important rating factors associated with a CVT:

- Input frequency or frequency range
- Input voltage range
- Input watts or volt-amperes
- Input current
- Output voltage
- Output current
- Output watts or volt-amperes
- Maximum and/or minimum ambient temperature
- Schematic diagram or connection information
- Maximum working voltage
- Resonant-capacitor information

9.6 New Technology Advancements

Because CVTs are primarily constructed with three major components—magnetic core, magnet wire, and a capacitor—a consensus exists among a number of leading CVT manufacturers that, while nothing revolutionary is expected in the near-future, their transformers will continue to be enhanced in many ways. Whatever CVT innovations do occur will essentially be in improving CVT assembly procedures and techniques. In general, advances in CVT design are focused on reducing CVT sizes and audible noise levels and increasing efficiencies at all load conditions.

It is worth mentioning that the CVT user market seems to be moving toward controlled CVTs because of their very precise output-voltage regulation, their ability to easily adjust the output voltage to exactly the desired reference required, and their extraordinary immunity to becoming

www.EngineeringEbooksPdf.com

unstable in certain loading applications. In a number of field situations, controlled* CVTS can be customer-adjusted for the specific application.

9.7 Addendum

The following is a tutorial description of the difference between a ferroresonant circuit and a linear circuit. The main differences between a ferroresonant circuit and a linear resonant circuit are, for a given ω:

- Resonance occurs when the inductance is in saturation.
- As the value of inductance in saturation is not known precisely, a wide range of capacitances can potentially lead to ferroresonance at a given frequency.
- The frequency of the voltage and current waves may be different from that of the sinusoidal voltage source.
- Initial conditions (initial charge on capacitors, remaining flux in the core of the transformers, switching instant) determine which steady-state response will result.

A study of the free oscillations of the circuit in Figure 9.21a illustrates this specific behavior. Losses are assumed negligible, and the simplified magnetization curve ϕ(i) of the iron-core coil is that represented

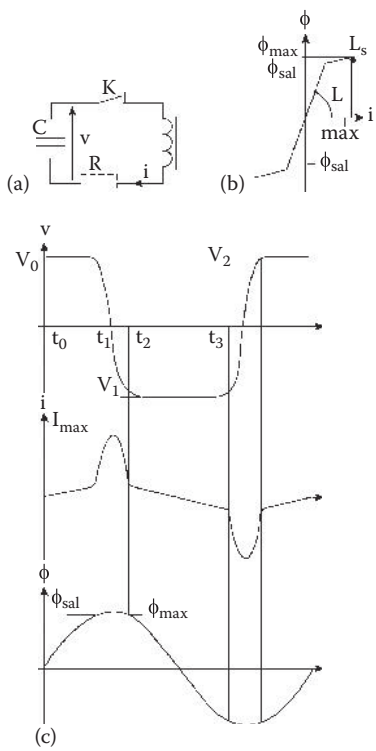

FIGURE 9.21 (a) Schematic diagram. (b) Simplified characteristic ϕ(i). (c) Voltage V, current i and flux ϕ as a function of time.

* The principles of operation for the controlled CVT are in that the transformer's output winding is on the same leg of the magnetic core as the resonant winding, and the resonant capacitor acts to maintain this core section at a high level of saturation, resulting in a fairly constant voltage. To provide a precise constant voltage, it is necessary to control this level of core saturation. This is frequently accomplished by shunting the resonant circuit with a solid-state switching device in series with an inductor.

www.EngineeringEbooksPdf.com

in Figure 9.21b. Despite these simplifying assumptions, the corresponding waveforms (see Figure 9.21c) are typical of a periodic ferroresonance.

Originally, voltage at the capacitance terminals is assumed equal to V_0. At the instant t_0 switch K closes, a current i is created, and oscillates at the pulsation

$$\bar{\omega}_1 = \frac{1}{\sqrt{LC}} \tag{9.5}$$

The flux in the coil and voltage V at the capacitor terminals are then expressed as:

$$\phi = (V_0/\omega_1)\sin(\omega_1 t) \tag{9.6}$$

$$V = V_0 \sin(\omega_1 t) \tag{9.7}$$

If $(V_0/\omega_1) > \phi_{sat}$ at the end of time t_1, the flux ϕ reaches the saturation flux ϕ_{sat}, voltage V is equal to V_1, and the inductance of the saturated coil becomes L_S. As L_S is very small compared with L, the capacitor suddenly "discharges" across the coil in the form of an oscillation of pulsation

$$\bar{\omega}_2 = \frac{1}{\sqrt{L_S C}} \tag{9.8}$$

The current and flux peak when the electromagnetic energy stored in the coil is equivalent to the electrostatic energy $1/2CV^2$ restored by the capacitor.

At instant t_2, the flux returns to ϕ_{sat}, the inductance reassumes the value L, and since the losses have been ignored, voltage V, which has been reversed, is equal to $-V_1$.

At instant t_3, the flux reaches $-\phi_{sat}$ and voltage V is equal to $-V_2$. As ω_1 is in practice very small, we can consider $V_2 \approx V_1 \approx V_0$. Consequently, period T of the oscillation is included between $2\pi\sqrt{LC}$ in the *nonsaturated* case and $2\pi\sqrt{L_S C} + 2(t_3 - t_2)$ in the *saturated* case, where $(t_3 - t_2) \approx 2\phi_{sat}/V_0$. The corresponding frequency f (f = 1/T) is thus such that:

$$\frac{1}{2\pi\sqrt{LC}} < f < \frac{1}{2\pi\sqrt{L_S C}}$$

This initial frequency depends on ϕ_{sat}, i.e., on the nonlinearity and the initial condition V_0. In practice, due to the losses Ri^2 in the resistance R, the amplitude of voltage V decreases ($V_2 < V_1 < V_0$). Because the flux varies as follows,

$$\Delta\phi = 2\phi_{stat} = \int_{t_2}^{t_3} v\,dt$$

a decrease of V results in a reduction in frequency. If the energy losses are supplied by the voltage source in the system, the frequency of the oscillations, as it decreases, can lock at the frequency of the source (if the initial frequency is greater than the power frequency) or even submultiple frequency of the source frequency (if the initial frequency is smaller than the power frequency).

Note that there can be four resonance types, namely fundamental mode, subharmonic mode, quasiperiodic mode, or chaotic mode (see Figure 9.22).

www.EngineeringEbooksPdf.com

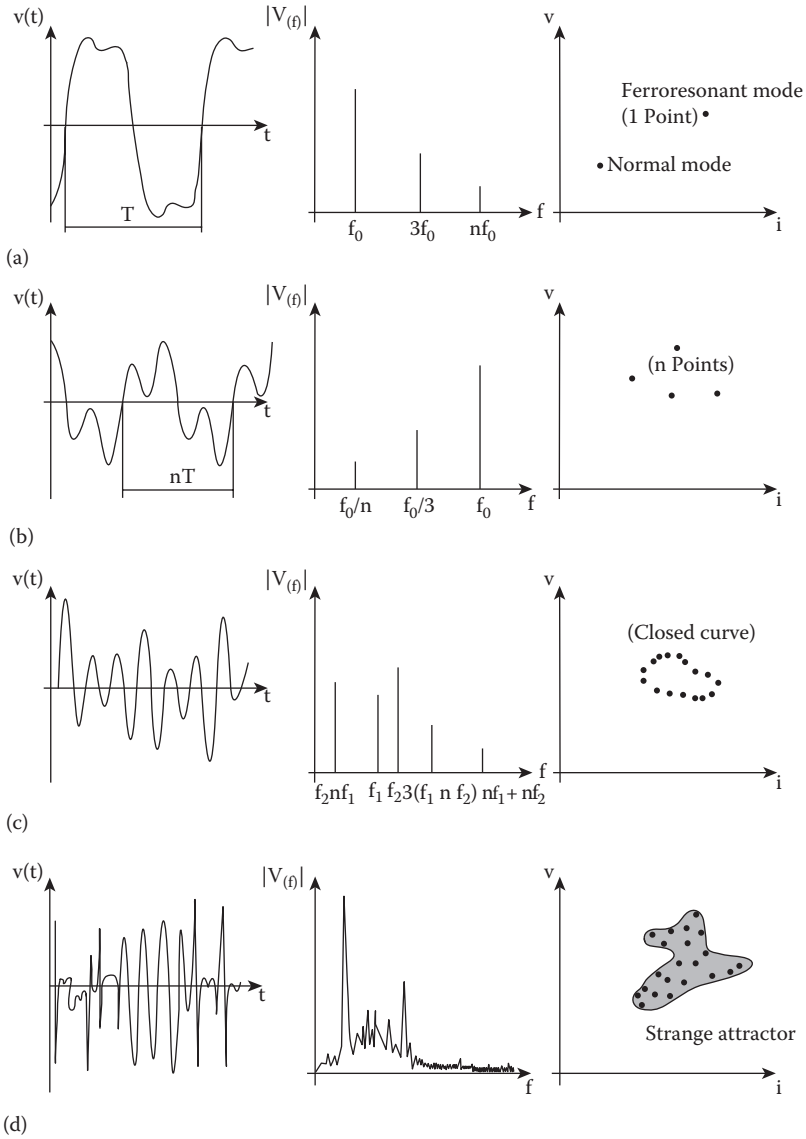

FIGURE 9.22 Waveforms typical of a periodic ferroresonance: (a) fundamental mode, (b) subharmonic mode, (c) quasi-periodic mode, and (d) chaotic mode.

References

1. Sola/Hevi-Duty Corp., About Sola/Hevi-Duty, http://www.sola-hevi-duty.com/about/solahist.html, October 18, 2002.
2. Advance Galatrek, CVT background data, http://www.aelgroup.co.uk/hb/hb003.htm, October 18, 2002.
3. Godfrey, S., Ferroresonance, http://www.physics.carleton.ca/courses/75.364/mp-1html/node7.html, October 18, 2002.
4. Cadicorp, Ferro-Resonance, Technical Bulletin 004a, www.cadicorp.com, October 18, 2002.
5. Groupe Schneider, Ferroresonance, No. 190, www.schneiderelectric.com, October 19, 2002.

www.EngineeringEbooksPdf.com

6. IEEE, *Standard for Ferroresonant Voltage Regulators*, IEEE Std. 449–1998, Institute of Electrical and Electronics Engineers, Piscataway, NJ, 1998.
7. EPRI, System compatibility projects to characterize electronic equipment performance under varying electric service supply conditions, EPRI PEAC, Knoxville, TN, May 1993.
8. EPRI, Sizing constant-voltage transformers to maximize voltage regulation for process control devices, PQTN Application No. 10, EPRI PEAC, Knoxville, TN, October 1997.
9. EPRI, Ferro-resonant transformer output performance under varying supply conditions, PQTN Brief No. 13, EPRI PEAC, Knoxville, TN, May 1993.
10. EPRI, Ferro-resonant transformer output performance under dynamic supply conditions, PQTN Brief No. 14, EPRI PEAC, Knoxville, TN, January 1994.
11. EPRI, Ferro-resonant transformer input electrical characteristics during linear and nonlinear loading, PQTN Brief No. 16, EPRI PEAC, Knoxville, TN, February 1994.
12. EPRI, Testing a prototype ferro-resonant transformer, EPRI PEAC, Knoxville, TN, unpublished.
13. D. Dorr, Evolution of the new CBEMA curve, PQ/PCIM 1996 Conference Proceedings, Long Beach, CA.
14. IEEE Std 1100-2005, Recommended Practice for Powering and Grounding Electronic Equipment, Institute of Eelctrical and Electronics Engineers, Piscataway, NJ, 2005, p. 41.

www.EngineeringEbooksPdf.com

10

Transformers for Wind Turbine Generators and Photovoltaic Applications

David E. Buckmaster
Consultant

Hemchandra Shertukde
University of Hartford and Yale University

10.1 Alternative Energy **10**-1
10.2 Wind Turbine Generators **10**-3
10.3 Wind Turbine Generator Output **10**-3
10.4 Calculations for Losses for Nonsinusoidal Loads **10**-9
Definitions for Calculations
10.5 Equations and Calculations **10**-9
Load Loss Equation • Transformer per Unit Loss Equations • Transformer Losses at Measured Currents • Harmonic Loss Factor for Winding Eddy Currents • Harmonic Loss Factor for Other Stray Losses • Design and Specification Considerations
10.6 DPV-GT Paralleling Methods Comparison **10**-15
Differentiation for Solar Energy Transformers • Design Considerations Inside/Outside Windings • Core Needs of DPV-GT • DPV-GT Solar Converter Step-Up Transformers
References **10**-18

10.1 Alternative Energy

According to the Renewable Electricity Standard included in the *American Clean Energy and Security Act*, 20% of all electricity production by the year 2020 must be from renewable sources such as wind, solar, and geothermal. Currently, wind accounts for 0.72%, solar/PV accounts for 0.08%, and geothermal accounts for 0.4% of all electricity produced in the United States as of the end of 2009, as shown in Figure 10.1, courtesy of the U.S. Department of Energy; Energy Information Administration/Electric Power Annual 2009.

In the past decade, of all the nonhydroelectric renewable power sources, only wind has shown significant increase in energy production, as shown in Figure 10.2.

Large commercial wind farms consist of up to 200 turbines for a combined output to the power grid of up to 400 MW. Each circuit of the collection system will typically contain between 9 and 15 turbines (depending on the turbine rating). In Figures 10.3 and 10.4, a single-line diagram modeled for performing coordination studies and arc flash studies as mandated by NFPA-70E and OSHA is shown. Figure 10.4 represents just one circuit on the collection system.

www.EngineeringEbooksPdf.com

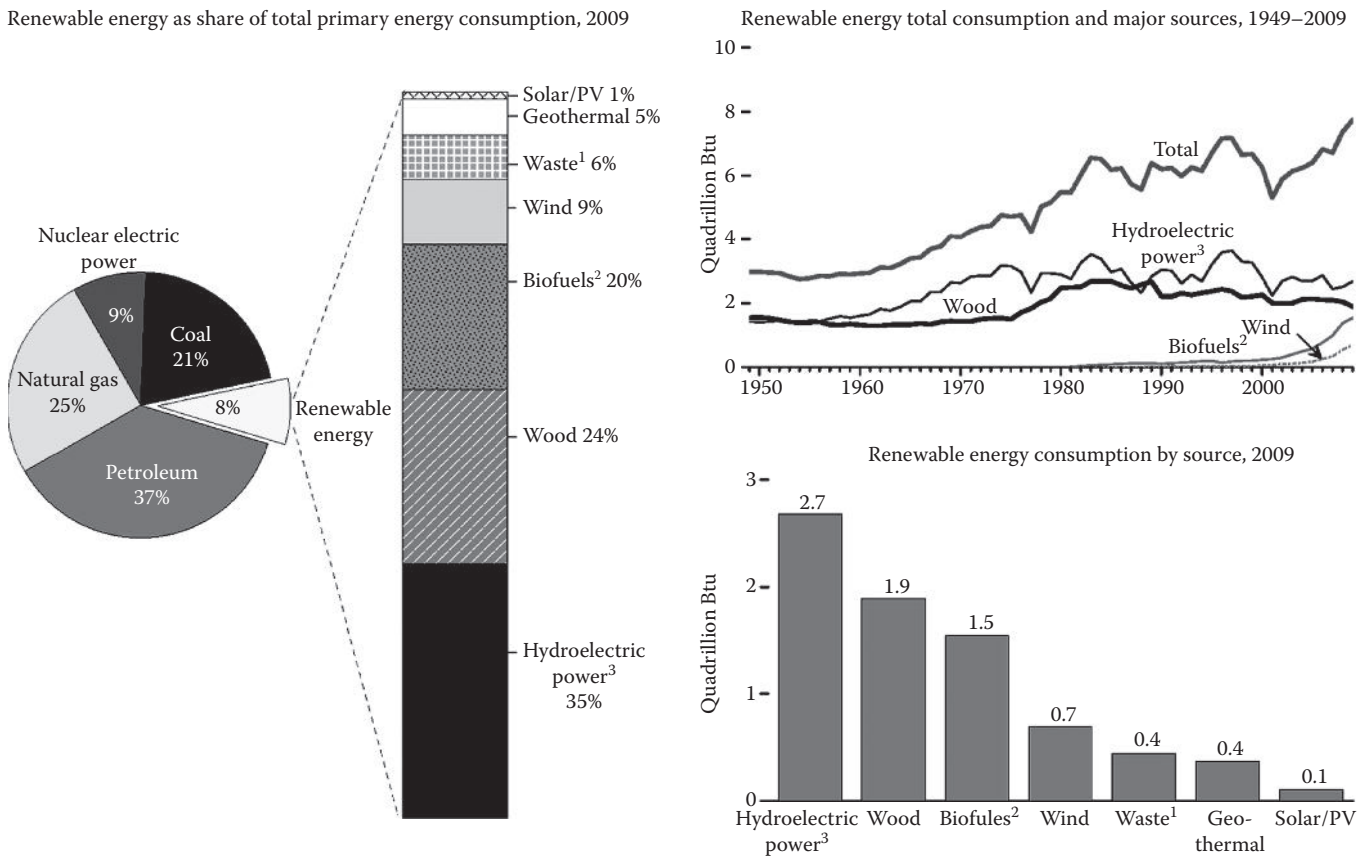

U.S. Energy information administration/annual energy review 2009

FIGURE 10.1 Renewable energy consumption by major source. [1]Municipal solid waste from biogenic sources, landfill gas, sludge waste, agricultural byproducts, and other biomass; [2]Fuel ethanol (minus denaturant) and biodiesel consumption, plus losses and coproducts from the production of fuel ethanol and biodiesel; [3]Conventional hydroelectric power. (Sources: Tables 1.3 and 10.1.)

www.EngineeringEbooksPdf.com

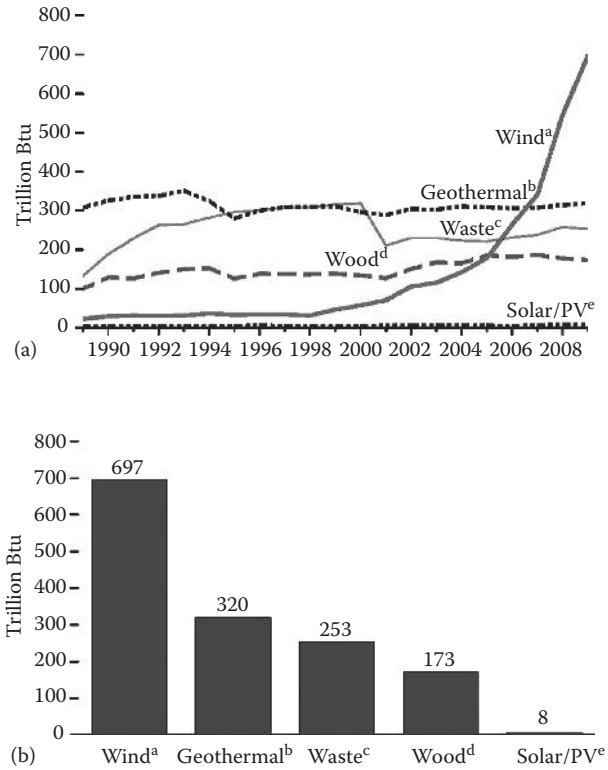

FIGURE 10.2 (a) Nonhydroelectric renewable power sources, trend 1989–2009. (b) Installed capacity nonhydroelectric renewable power sources, 2009. *Note:* a, Wind electricity net generation; b, Geothermal electricity net generation; c, Municipal solid waste from biogenic sources, landfill gas, sludge waste, agricultural byproducts, and other biomass. Through 2000, also includes non-renewable waste (municipal solid waste from non-biogenic sources and tire-derived fuels); d, Wood and wood derived fuels; e, Solar thermal and photovoltaic (pv) electricity net generation.

10.2 Wind Turbine Generators

Transformers that are directly connected to a wind turbine generator (WTG) must be suitable for step-up operation; however, they are never energized from the low-voltage (LV) terminals, and therefore, the LV inrush currents are not considered in the design. These transformers do, however, need special considerations due to rapid increases/decreases in current, through fault current due to low-voltage ride through (LVRT) requirements from the bulk energy supplier (BES) and harmonics produced by the turbine and control equipment up to the 39th order.

Power is defined as $V \times I$ in volt-amperes. We will presume, for our discussion, that the system is at a unity power factor, therefore volt-amperes = watts.

10.3 Wind Turbine Generator Output

Most commercially available WTGs are randomly wound, three-phase, self-exciting induction machines that will have a terminal voltage in the range of 575–690 V_{L-L} and begin producing power at a wind speed of 4 m/s (9 MPH), referred to as the cut-in speed and is the point where the voltage on the

www.EngineeringEbooksPdf.com

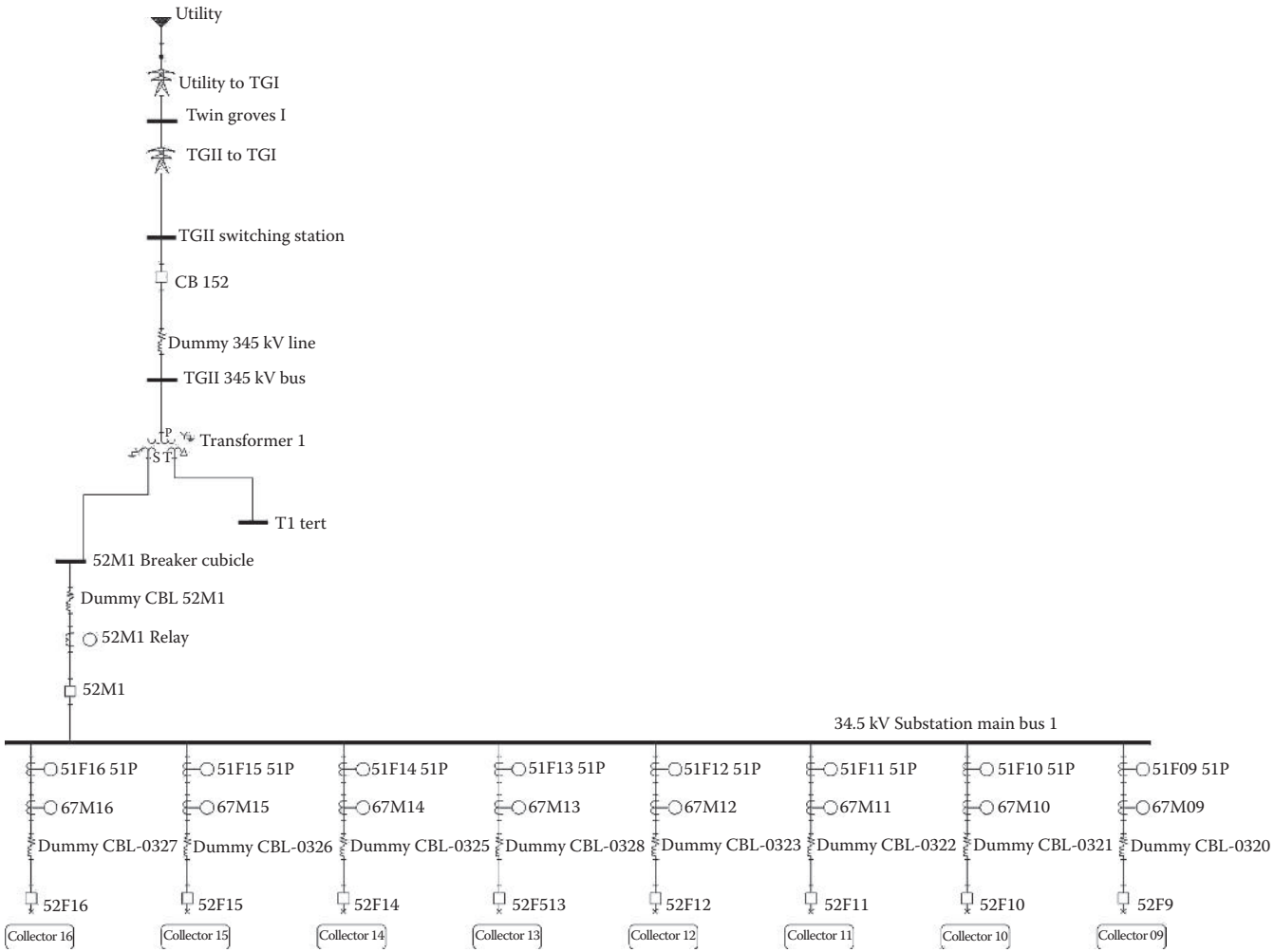

FIGURE 10.3 Typical large commercial wind farm one-line diagram.

www.EngineeringEbooksPdf.com

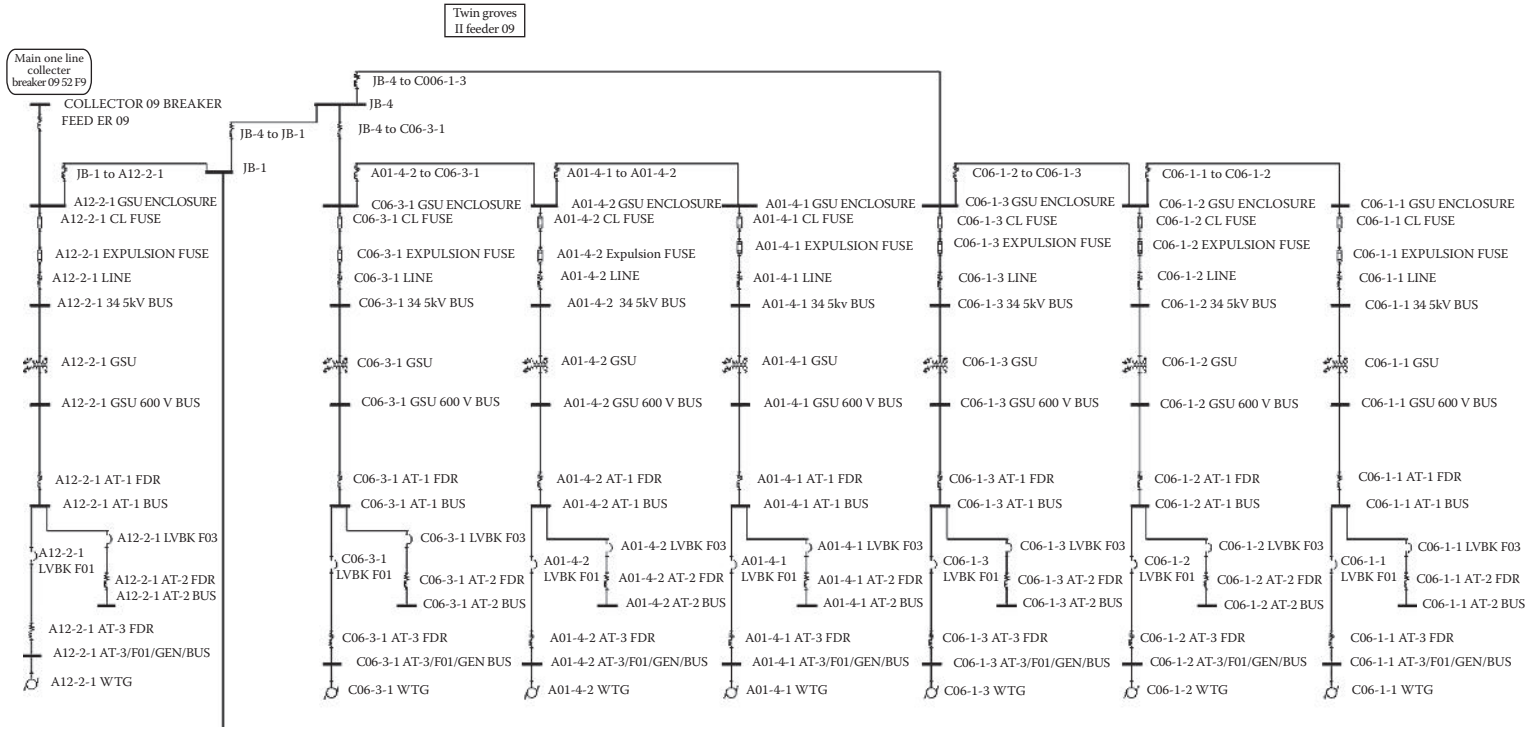

FIGURE 10.4 One circuit on the collection system of Figure 10.3.

(continued)

www.EngineeringEbooksPdf.com

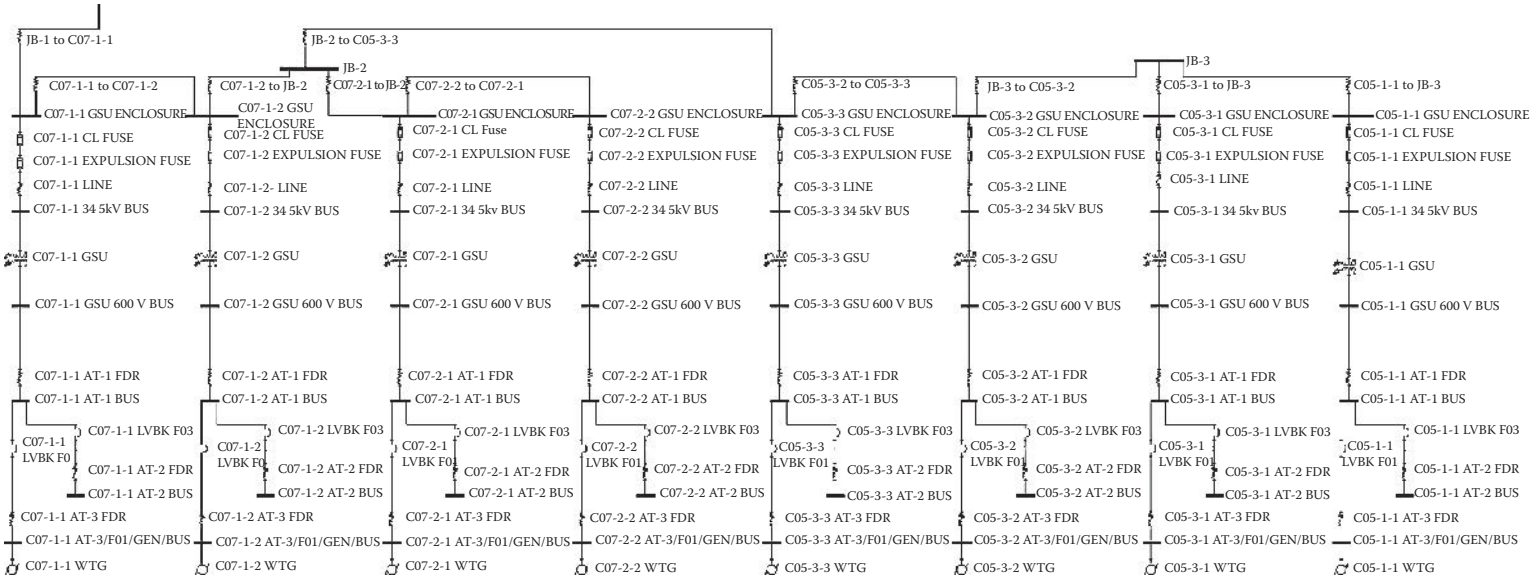

FIGURE 10.4 (continued)

www.EngineeringEbooksPdf.com

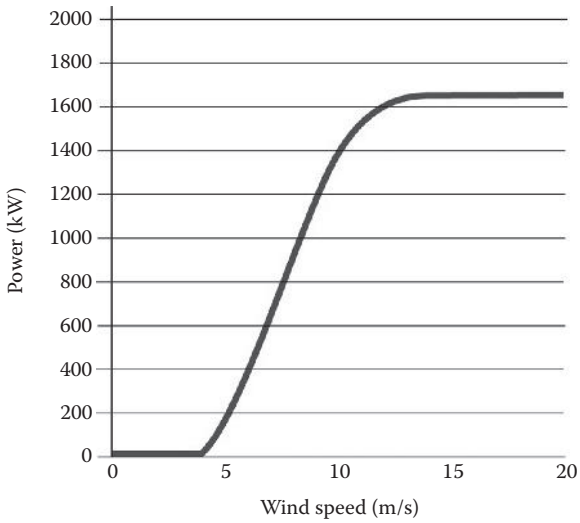

FIGURE 10.5 Typical power versus wind speed curve of a 1650 kW WTG.

generator terminals reaches the rated voltage. Commercial WTGs come in a variety of capacity ranging from 1500 up to 3000 kW, with both 5000 and 8000 kW in testing and may become commercially available by the year 2012. Consideration to current is important as wind gusts can cause the turbine to accelerate to drive a current of up to 200% of the rated current, momentarily. If the velocity changes gradually, the automatic pitch control will rotate the airfoils for optimal performance. Unfortunately, the automatic pitch control system cannot react fast enough for either gusts or wind drop outs. The typical rate of rotation for the pitch motor is 2°/s. The typical power curve of a 1650 kW WTG, Figure 10.5, shows the output (kW) versus wind speed (m/s).

In the case where the sustained wind is at 11 m/s, a single turbine with a base transformer rated at 1750 kVA is producing approximately 1500 kW or supplying a current of approximately 1443 A at 600 V. If the single turbine experiences a 3 s sustained wind gust of 30 m/s, the output would ramp to approximately 3600 kW, which is more than 200% of the nameplate rating, driving a current of approximately 3460 A which, at unity power factor, exceeds the transformer rating by >200%. The pitch controller cannot overcome the wind gust as shown in Figure 10.6. Note that the circuit breaker for the collection circuit will not trip as the contribution at the 34.5 kV side is only elevated by 35 A.

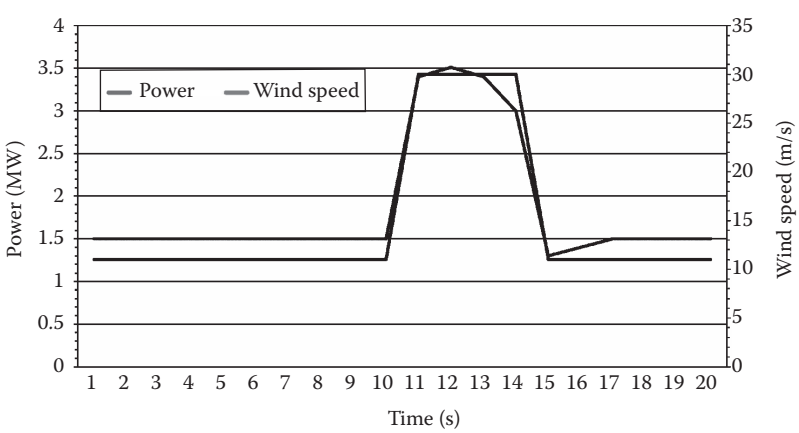

FIGURE 10.6 Wind gust effect on power output.

www.EngineeringEbooksPdf.com

Additionally, the BES includes a requirement that the WTGs must be able to withstand a momentary loss of voltage, from the grid, without shutting down. The LVRT is normally configured to maintain generation for between 9 and 11 cycles. This also means that a fault on the collection system results in a zero voltage condition, and the WTG, through the transformer, will continue to feed that fault with all available current for up to 11 cycles and the ramp-down time for the turbine to reach the 4 m/s drop-out speed where the airfoils are pitched to minimal lift.

Before going into calculations, we should become familiar with a typical WTG. The WTG shown in Figure 10.7 is rated at 1650 kW with an output voltage of $600V_{L-L}$ and an oil-insulated step-up transformer located outside at the base of the tower.

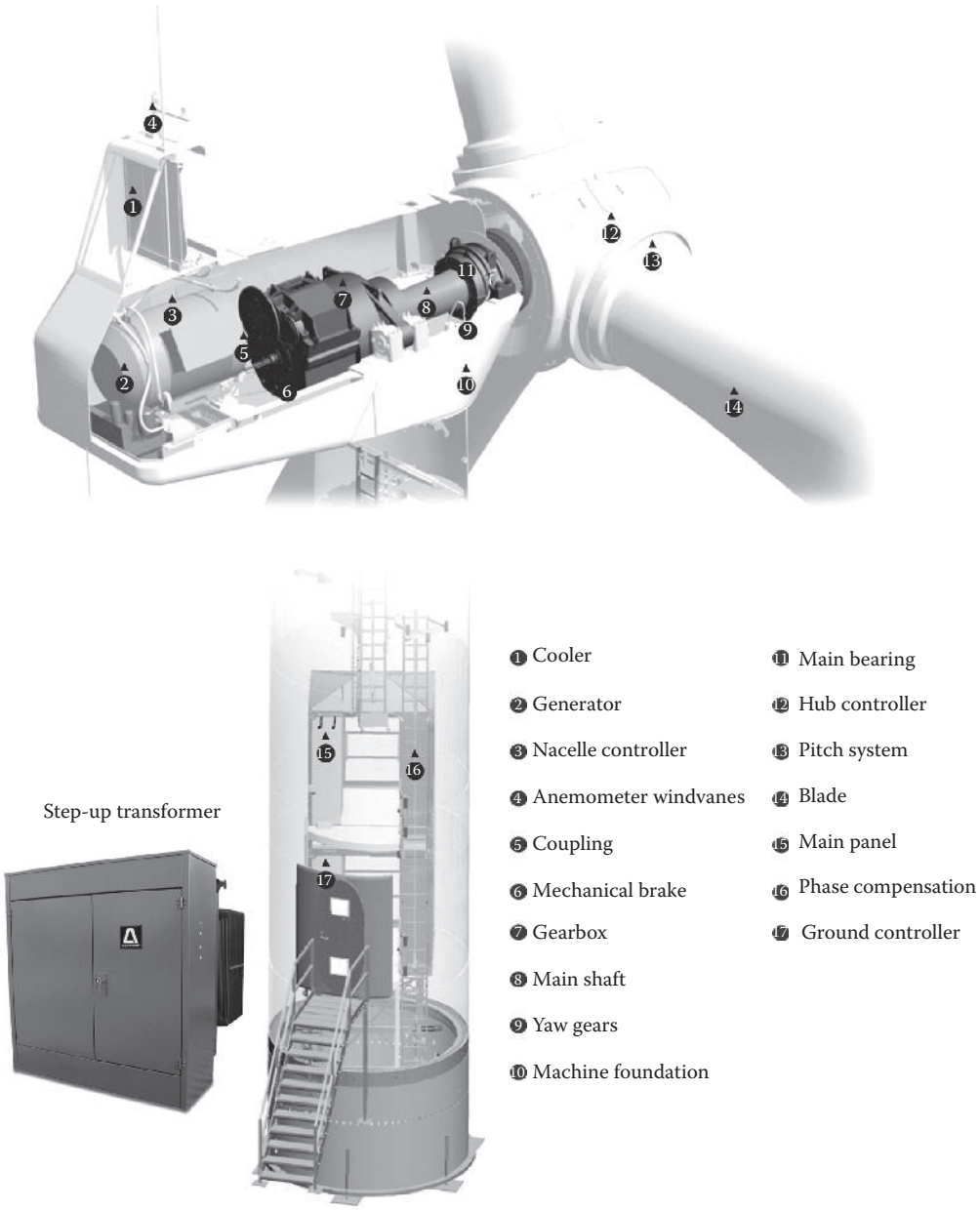

FIGURE 10.7 Typical WTG installation.

www.EngineeringEbooksPdf.com

10.4 Calculations for Losses for Nonsinusoidal Loads

10.4.1 Definitions for Calculations

F_{HL}	Harmonic loss factor for winding eddy currents
$F_{HL\text{-}STR}$	Harmonic loss factor for other stray losses
H	Harmonic order
h_{max}	Highest significant harmonic number (h_{max} = 39)
I	RMS load current (A)
I_1	RMS fundamental load current (A)
I_h	RMS current at harmonic "h" (A)
I_{max}	Maximum permissible rms nonsinusoidal load current (A)
I_R	RMS fundamental current under rated frequency and rated load conditions (A)
$I_{1\text{-}R}$	High-voltage (HV) rms fundamental line current under rated frequency and rated load conditions (A)
$I_{2\text{-}R}$	LV rms fundamental line current under rated frequency and rated load conditions (A)
I_T	RMS test current (A)
$I_{1\text{-}T}$	HV rms test current (A)
$I_{2\text{-}T}$	LV rms test current (A)
P_{EC}	Winding eddy-current loss (ECL) (W)
$P_{EC\text{-}R}$	Winding ECL under rated conditions (W)
$P_{EC\text{-}O}$	Winding ECLs at the measured current and the power frequency (W)
P	I^2R loss portion of the load loss (W)
P_{DC}	Total calculated I^2R losses at ambient temperature (W)
$P_{2\text{-}DC}$	LV calculated I^2R losses at ambient temperature (W)
P_{AC}	Measured impedance losses at ambient temperature (W)
P_{LL}	Load loss (W)
$P_{LL\text{-}R}$	Load loss under rated conditions (W)
P_{NL}	No load loss (W)
P_{OSL}	Other stray loss (W)
$P_{OSL\text{-}R}$	Other stray loss under rated conditions (W)
$P_{TSL\text{-}R}$	Total stray loss under rated conditions (W)
R	Direct current (DC) resistance (ohm)
R_1	DC resistance measured between two HV terminals (ohm)
R_2	DC resistance measured between two LV terminals (ohm)
θ_g	Hottest-spot conductor rise over top-oil temperature (°C)
$\theta_{g\text{-}R}$	Hottest-spot conductor rise over top-oil temperature under rated conditions (°C)
θ_{g1}	Hottest-spot HV conductor rise over top-oil temperature (°C)
$\theta_{g1\text{-}R}$	Hottest-spot HV conductor rise over top-oil temperature under rated conditions (°C)
θ_{TO}	Top-oil rise over ambient temperature (°C)
$\theta_{TO\text{-}R}$	Top-oil rise over ambient temperature under rated conditions (°C)
(pu)	This symbol modifier may be added to the listed symbols to represent a per-unit value of that quantity. Current quantities are referred to the rated rms load current I_R, and loss quantities are referred to the rated load I^2R loss density, e.g., I_h (pu) and $P_{EC\text{-}R}$ (pu)

10.5 Equations and Calculations

10.5.1 Load Loss Equation

$$P_{LL} = P + P_{EC} + P_{OSL} \text{ (W)} \tag{10.1}$$

There are additional effects of harmonics on eddy currents P_{EC} and other stray currents P_{OSL}; harmonic load currents are frequently accompanied by a DC component. The DC component will marginally

www.EngineeringEbooksPdf.com

not only increase the core loss but will also increase the magnetizing current which will increase the audible noise level. Higher DC load current components may adversely affect the performance of the transformer capability.

10.5.2 Transformer per Unit Loss Equations

Since the greatest concern about a transformer operating under harmonic load conditions will be for overheating of the windings, it is convenient to consider loss density in the windings on a per-unit basis (base current is rated current, and base loss density is the I^2R loss density at rated current). Therefore, Equation 10.1 applied to rated load conditions can be rewritten on a per-unit basis as follows:

$$P_{\text{LL-R}}(\text{pu}) = 1 + P_{\text{EC-R}}(\text{pu}) + P_{\text{OSL-R}}(\text{pu})\ \text{pu} \tag{10.2}$$

Given the ECL under rated conditions for a transformer winding or portion of a winding, ($P_{\text{EC-R}}$), the ECL due to any defined nonsinusoidal load current can be expressed as

$$P_{\text{EC}} = P_{\text{EC-R}} \sum_{h=1}^{h=h_{\max}} \left(\frac{I_{\text{h}}}{I_{\text{R}}}\right)^2 h^2\ (\text{W}) \tag{10.3}$$

The I^2R loss at rated load is 1 per unit (by definition). For nonsinusoidal load currents, the equation for the rms current in per-unit form (base current is rated current) will be

$$I\ (\text{pu}) = \sqrt{\sum_{h=1}^{h=h_{\max}} I_{\text{h}}\ (\text{pu})^2}\ \text{pu} \tag{10.4}$$

Equation 10.3 can also be written in per-unit form (base current is rated current, and base loss density is the I^2R loss density at rated current):

$$P_{\text{EC}}(\text{pu}) = P_{\text{EC-R}}(\text{pu}) \sum_{h=1}^{k=h_{\max}} I_{\text{h}}\ (\text{pu})^2 h^2\ \text{pu} \tag{10.5}$$

10.5.3 Transformer Losses at Measured Currents

Equations 10.2 through 10.5 assume that the measured application currents are taken at the rated currents of the transformer. Since this is seldom encountered in the field, a new term is needed to describe the winding eddy losses at the measured current and the power frequency, $P_{\text{EC-O}}$. Three assumptions in addition to the basic premises of the transformer capability equivalent are necessary to clarify the use of this term:

1. The eddy losses are approximately proportional to the square of the frequency. This assumption will cause any subsequent equations to be accurate for small conductors and low harmonics, with errors on the high side, for a combination of larger conductors and higher harmonics.
2. The eddy losses are a function of the current in the conductors. Any equation for loss can then be expressed in terms of the rms load current, I.
3. Superposition of eddy losses will apply, which will permit the direct addition of eddy losses due to the various harmonics.

www.EngineeringEbooksPdf.com

Equations 10.3 and 10.5 may now be written more generally in the following equation:

$$P_{EC} = P_{EC\text{-}O} \sum_{h=1}^{k=h_{max}} \left(\frac{I_h}{I} \right)^2 h^2 \text{ (W)} \tag{10.6}$$

By removing the rms current I from the summation, the equation becomes

$$P_{EC} = P_{EC\text{-}O} \times \frac{\sum_{h=1}^{k=h_{max}} I_h^2 h^2}{I^2} \text{ (W)} \tag{10.7}$$

The rms value of the nonsinusoidal load current is then calculated as

$$I = \sqrt{\sum_{h=1}^{k=h_{max}} I_h^2 \text{ (A)}} \tag{10.8}$$

The rms current value I may be expressed by its harmonic components:

$$P_{EC} = P_{EC\text{-}O} \times \frac{\sum_{h=1}^{k=h_{max}} I_h^2 h^2}{\sum_{h=1}^{k=h_{max}} I_h^2} \text{ (W)} \tag{10.9}$$

10.5.4 Harmonic Loss Factor for Winding Eddy Currents

It is convenient to assign a single number which may be used to determine the capabilities of a transformer in supplying power to a load. F_{HL} is a proportionality factor applied to the winding eddy losses, which represents the effective rms heating as a result of the harmonic load current. F_{HL} is the ratio of the total ECLs due to the harmonics, (P_{EC}), to the ECLs at the power frequency, as if no harmonic currents existed, ($P_{EC\text{-}O}$). This defining equation form is

$$F_{HL} = \frac{P_{EC}}{P_{EC\text{-}O}} = \frac{\sum_{h=1}^{k=h_{max}} I_h^2 h^2}{\sum_{h=1}^{k=h_{max}} I_h^2} \tag{10.10}$$

Equation 10.10 permits F_{HL} to be calculated in terms of the actual rms values of the harmonic currents. Various measuring devices permit calculations to be made in terms of the harmonics normalized to the total rms current or to the first or fundamental harmonic. Equation 10.10 may be adapted to these situations by dividing the numerator and denominator by either I_1, the fundamental harmonic current, or by I, the total rms current. These terms may now be applied to Equation 10.10 term by term, resulting in Equations 10.11 and 10.12:

$$F_{HL} = \frac{\sum_{h=1}^{k=h_{max}} \left[\frac{I_h}{I_1} \right]^2 h^2}{\sum_{h=1}^{k=h_{max}} \left[\frac{I_h}{I_1} \right]^2} \tag{10.11}$$

www.EngineeringEbooksPdf.com

The quantity may be directly read on a meter, not needing the computation procedure:

$$F_{HL} = \frac{\sum_{h=1}^{k=h_{max}} \left[\frac{I_h}{I}\right]^2 h^2}{\sum_{h=1}^{k=h_{max}} \left[\frac{I_h}{I}\right]^2} \tag{10.12}$$

In either case, F_{HL} remains the same value since it is a function of the harmonic current distribution and is independent of the relative magnitude. Two examples may be used to clarify these definitions. In both examples, a nonsinusoidal load current of 1804 A rms will be used as the rated current, which is representative of a 2000 kW WTG operating at approximately 95% capacity. The load may be described by the harmonic distribution, normalized to the rms load current of 1804 A (see Table 10.1).

The calculations are tabulated in Table 10.2.

The summation of the third column, $(I_h/I)^2$, is equal to 1.000 and represents the rated rms load on a per-unit basis. The harmonic loss factor for this harmonic distribution is

$$F_H = \frac{2.750375}{1.000} = 2.750375 \tag{10.13a}$$

This same loading example may also be described in terms of the harmonic currents, normalized to the harmonic current of the fundamental frequency, as found in Table 10.3.

Note that the values of the harmonic current, I_h, are the same in both examples, but the normalized values are different since these values are normalized to the harmonic current of the fundamental frequency. The calculation is tabulated as shown in Table 10.4.

Whether the individual harmonic currents are normalized to the rms load current, I, or to the fundamental load current, I_1, the value of harmonic loss factor is the same:

$$F_H = \frac{2.750375}{1.000} = \frac{2.831007}{1.045816} = 2.750375 \tag{10.13b}$$

TABLE 10.1 Harmonic Current Distribution, Normalized to the Example RMS Load Current of 1804 A

h	I_h	$\frac{I_h}{I}$
1	1764	0.978
5	308.5	0.171039
7	194.4	0.10778
11	79.39	0.044016
13	50.52	0.028009
17	27.06	0.015003
19	17.68	0.009802
23	11.29	0.006259
25	10.04	0.005566
29	8.78	0.004868
31	5.73	0.003177

www.EngineeringEbooksPdf.com

TABLE 10.2 Example 1: Harmonic Loss Factor Calculation for Harmonic Distribution of Table 10.1

h	$\frac{I_h}{I}$	$\left(\frac{I_h}{I}\right)^2$	h^2	$\left(\frac{I_h}{I}\right)^2 h^2$
1	0.978	0.956484	1	0.956484
5	0.171	0.029241	25	0.731025
7	0.108	0.011664	49	0.571536
11	0.044	0.001936	121	0.234256
13	0.028	0.000784	169	0.132496
17	0.0150	0.000225	289	0.065025
19	0.0098	9.6E–05	361	0.03467
23	0.0054	2.92E–05	529	0.015426
25	0.0030	0.000009	625	0.005625
29	0.0017	2.89E–06	841	0.00243
33	0.00093	8.65E–07	1089	0.000942
35	0.00052	2.7E–07	1225	0.000331
39	0.00029	8.41E–08	1521	0.000128
Σ	—	1.000	—	2.750375

TABLE 10.3 Example 1: Harmonic Currents of Table 10.2, Normalized to the Harmonic Current of the Fundamental Frequency

h	I_h	$\frac{I_h}{I}$
1	1764	0.978
5	308.5	0.1710
7	194.9	0.1081
11	79.39	0.0440
13	50.52	0.0280
17	27.06	0.0150
19	17.68	0.0098
23	9.82	0.0054
25	5.46	0.0030
29	3.03	0.0017
33	1.68	0.00093
35	0.94	0.00052
39	0.52	0.00029

10.5.5 Harmonic Loss Factor for Other Stray Losses

Although the heating due to other stray losses is generally not a consideration for dry-type transformers, it can have a substantial effect on liquid-filled transformers. A relationship similar to the harmonic loss factor for winding eddy losses exists for these other stray losses in a transformer and may be developed in a similar manner. However, the losses due to bus bar connections, structural parts, tank, etc., are

www.EngineeringEbooksPdf.com

TABLE 10.4 Example 2: Harmonic Loss Factor Calculation for Harmonic Distribution of Table 10.1

h	$\frac{I_h}{I}$	$\left(\frac{I_h}{I}\right)^2$	h^2	$\left(\frac{I_h}{I}\right)^2 h^2$
1	1.000	1	1	1
5	0.175	0.030625	25	0.765625
7	0.110	0.0121	49	0.5929
11	0.045	0.002025	121	0.245025
13	0.029	0.000841	169	0.142129
17	0.009	0.000081	289	0.023409
19	0.0100	0.0001	361	0.0361
23	0.0055	3.03E–05	529	0.016002
25	0.0031	9.61E–06	625	0.006006
29	0.0017	2.89E–06	841	0.00243
33	0.00093	8.65E–07	1089	0.000942
35	0.00051	2.6E–07	1225	0.000319
39	0.00028	7.84E–08	1521	0.000119
Σ	—	1.045816	—	2.831007

proportional to the square of the load current and the harmonic frequency to the 0.8 power. This may be expressed in a form similar to Equation 10.14:

$$P_{\text{OSL}} = P_{\text{OSL-R}} \sum_{h=1}^{k=h_{\max}} \left(\frac{I_h}{I_g}\right)^2 h^{0.8} \tag{10.14}$$

The equations corresponding to the harmonic loss factor, normalized to the fundamental current and normalized to the rms current, respectively, are

$$F_{\text{HL-STR}} = \frac{\sum_{h=1}^{k=h_{\max}} \left[\frac{I_h}{I_1}\right]^2 h^{0.8}}{\sum_{h=1}^{k=h_{\max}} \left[\frac{I_h}{I_1}\right]^2} \tag{10.15}$$

$$F_{\text{HL-STR}} = \frac{\sum_{h=1}^{k=h_{\max}} \left[\frac{I_h}{I}\right]^2 h^{0.8}}{\sum_{h=1}^{k=h_{\max}} \left[\frac{I_h}{I}\right]^2} \tag{10.16}$$

Using the harmonic distribution from the last example, the calculation is tabulated for the normalized fundamental current base as shown in Table 10.5:

$$F_{\text{HL-STR}} = \frac{1.191107}{1.045816} = 1.138926 \tag{10.17}$$

www.EngineeringEbooksPdf.com

TABLE 10.5 Example 2: Harmonic Currents of Table 10.4, Normalized to the Harmonic Current of the Fundamental Frequency

h	$\frac{I_h}{I}$	$\left(\frac{I_h}{I}\right)^2$	$h^{0.8}$	$\left(\frac{I_h}{I}\right)^2 h^{0.8}$
1	1.000	1	1	1
5	0.175	0.030625	3.623898	0.110982
7	0.110	0.0121	4.743276	0.057394
11	0.045	0.002025	6.809483	0.013789
13	0.029	0.000841	7.783137	0.006546
17	0.009	0.000081	9.646264	0.000781
19	0.0100	0.0001	10.54394	0.001054
23	0.0055	3.03E–05	12.2852	0.000372
25	0.0031	9.61E–06	13.13264	0.000126
29	0.0017	2.89E–06	14.7883	4.27E–05
33	0.00093	8.65E–07	16.39877	1.42E–05
35	0.00051	2.6E–07	17.18915	4.47E–06
39	0.00028	7.84E–08	18.74354	1.47E–06
Σ	—	1.045816	—	1.191107

10.5.6 Design and Specification Considerations

Special consideration needs to focus on the effects of a rapid ramp-up of power due to a rapid increase of current during a quick change of wind speed which the blade pitch motors are slow to react. Additionally, consideration should be given to the following:

Harmonic current filtering
Harmonic impact on the neutral
Power factor correction equipment
Electrostatic shielding
Harmonic spectrum analysis
Winding design to mitigate heat attributed to eddy currents
Losses when performing temperature rise calculations
Switching transients

Further consideration needs to be given for power flow reversal, heat rise during LVRT, and harmonic loading due to power factor control equipment.

These transformers must be considered a hybrid transformer which is a Class 1 power transformer with step-up capabilities, which is compartmentalized, and never energized from the LV terminals.

10.6 DPV-GT Paralleling Methods Comparison

Distributed photovoltaic grid transformers (DPV-GTs) generally fall under Class 1 as defined by IEEE Std. C57.12.00. A single-line diagram of a typical DPV-GT is shown in Figure 10.8.

10.6.1 Differentiation for Solar Energy Transformers

10.6.1.1 Loading

In most of the geographical locations in the United States, solar power facilities experience a steady-state loading when inverters are operating. When the sun comes out, there is a dampened reaction process,

www.EngineeringEbooksPdf.com

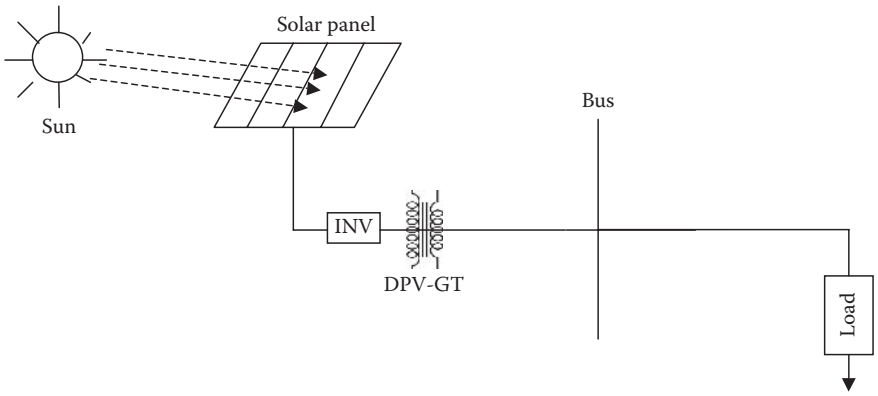

FIGURE 10.8 Typical one-line diagram with the solar panel connected to an inverter which is in turn connected to a DPV-GT, a bus, and a load.

and loading on the transformer is more constant. The entire process is controlled by the insolation number (the solar irradiance) in a particular location. The no-load operation of such transformers is completely controlled by different set of parameters.

10.6.1.2 No-Load Operation

DPV system grid transformers are subject to long-time no-load operation conditions, at least at night. This might have an impact not only on capitalization of losses that customers usually take into account but also on transformer design. During long-term no-load operation, oil is heated only by the core, so the thermal behavior of the active part is much different than at full load. This must be taken into account to avoid core overheating. Most small photovoltaic installations include batteries. It is also the case for large rating transformer. With a battery, the transformer load might become almost constant.

10.6.1.3 Low-Voltage Fault Ride Through

Fault ride through has yet to be defined for solar systems; this could be because it is easier to turn solar power systems on and off quickly.

10.6.1.4 Harmonics

The solar inverter system's typical harmonic content is less than 1%, which has almost no impact on the system. The lower harmonic profile is because there are no generators and switching and protective controls such as those found on wind turbines.

10.6.1.5 Generator Step-Up Duty

With solar transformers, step-up duty is required but without the problems associated with overvoltages caused by unloaded generators. The inverter converts DC input from the photovoltaic array and provides alternating current (AC) voltage to the transformer, giving a steady and smooth transition, with no overvoltage caused by unloaded circuits. All general installations covered under this application have in their system considerations much attention paid to the overvoltage conditions. This problem is addressed by providing an automatic gain control scheme to the inverter circuit configuration.

10.6.1.6 Voltage

Solar transformers operate at a steady voltage, with the rated voltage controlled by inverters. Therefore, voltage and load fluctuations are considerably reduced. The voltage variation is generally in the range of ±5% of the nominal voltage rating. Thus, standard design considerations for transformer windings are readily applied from experience.

www.EngineeringEbooksPdf.com

10.6.1.7 Nominal Loading Average

Solar power systems typically operate in close proximity to their rated loads. Since the load variation from the rated value is low, the operation of transformers is not adversely affected to cause deterioration of parameters that guide the insulation coordination of the core-coil structure. Thus, forces experienced by the primary and secondary windings are not out of the ordinary, thus alleviating problems that may occur in the design of the mechanical structure.

10.6.1.8 Special Design Issues

Solar power systems use inverters to convert DC to AC. Since the largest practical inverter size, to date, is about 500 kVA, designers are building 1000 kVA transformers by placing two inverter connected windings in one box. In this way, the transformer has to have two separate windings to accept completely separate inputs. Design issues also stem from running cables over long distances to convert from DC to AC.

10.6.1.9 Eddy-Current Losses and Stray Losses

Eddy currents and stray losses are present in every transformer. The primary stray and eddy losses are due to the 60 Hz frequency currents. These loss components increase with the square of the frequency and square of the magnitude of the eddy currents. If the inverter feeding the power into the step-up transformer is producing more than the standard level of harmonics, then the stray and eddy losses will increase. The increase in load loss effect on efficiency is not typically a concern. Of much greater concern is the increased hot-spot temperature in the windings that can reduce the transformer life. A special design transformer can compensate for the higher stray and eddy losses. Also, a larger than necessary kVA transformer can be selected to compensate for the higher operating temperatures. However, these concerns on ECL increasing are generally mitigated since harmonic content is usually less than 1%.

10.6.2 Design Considerations Inside/Outside Windings

The design considerations for windings are dependent on the issues in the previous items listed. The design considerations to meet the special requirements depend on the manufacturer's construction, kVA size, voltage, and other factors. Since inverter technology limits the size of the inverter, there may be multiple inverters at each solar station. Some users would consider having multiple LV windings in a single transformer with each LV winding connected to an inverter. Design considerations such as impedance and short circuit cause multiple LV windings to create a very complex transformer. Additional complexity will increase cost and reduce availability of the transformer. It is advisable to keep a transformer as simple as practical so that it can be mass produced and could be built by as many manufacturers as feasible. In many cases, the limit of the kVA on the inverter circuits forces some of the designs to incorporate the LV windings to be disposed outside the HV windings. This enables easier connections to facilitate paralleling of circuits to achieve higher kVA rating for the entire transformer under consideration. This helps to alleviate some of the problems faced due to constraints as enumerated in Section 10.6.2.1.

10.6.2.1 Size of Installation

The size of a solar farm is limited by inverter technology since inverters can currently only be built to about 500 kVA. This means that nearly all solar applications use pairs of 500 kVA inverters to drive the transformer and produce about 1000 kVA. Increasing the size by adding more inverters into one transformer box is extremely difficult due to complexities associated with the size of the box required and the practicalities of running cabling to convert from DC to AC.

10.6.2.2 Inverter Technology

Inverter technology has been slow to advance because it is an electronic technology. It remains to be seen whether this comparative disadvantage will be a fatal flaw in the advancement of solar technology to the same level as wind farms in the renewable energy arena.

www.EngineeringEbooksPdf.com

The duty cycle seen in solar farms may not be as severe as seen in wind farms, but solar power has its share of special considerations that affect transformer design. Those engaged in harnessing solar energy need to pay heed to these special needs to ensure that the solar installation is cost effective and reliable.

10.6.3 Core Needs of DPV-GT

Some fundamental requirements for a DPV-GT are the following:

- Efficient heat management: The heat generated due to uneven cooling of the coils leads to creation of hot spots. This leads to premature breakdown of the transformers.
- Lower harmonic and grid disturbances.
- Ability to withstand harsh weather conditions, temperature, seismic levels, etc.

10.6.4 DPV-GT Solar Converter Step-Up Transformers

A DPV-GT solar converter step-up transformer is uniquely designed to connect solar farms to the electricity grid at large-scale solar power installations.

Reliable and efficient step-up transformers are engineered solutions with the necessary design flexibility needed for the solar industry. The DPV-GT is designed for the additional loading associated with nonsinusoidal harmonic frequencies often found in inverter-driven transformers, and it has an innovative system of multiple windings which reduce transformer costs and minimize a transformer footprint.

DPV-GTs are designed and constructed to meet and exceed earthquake standards; DPV-GT is rated for installation in the highest earthquake rating zones. In addition, it incorporates a variety of fluids, including less flammable fluids required for enclosed applications. The DPV-GT features circular windings that spread the radial forces evenly over their circumference and have cooling ducts throughout the coils, eliminating hot spots that lead to premature breakdown and ultimately to transformer failure. The coil end blocking with heavy-duty three-gauge steel bracing and pressure plates takes on the axial forces exerted during a fault condition. These forces can cause telescoping of the coils, shortening transformer life.

The DPV-GT features an innovative design that includes round coils, a cruciform, mitered core with heavy-duty clamping, and a proprietary pressure plate design, as well as a premium no-load tap changer. The DPV grid step-up transformer is especially designed to meet the solar industry's need for reliable service in remote locations and offers superb fault survivability.

Depending on harmonic content, the user may wonder how to take it into account to define kVA rating of the transformer. IEEE Std. C57.129 and IEEE Std. C57.18.10 use a definition based only on the fundamental frequency and propose ways to take additional losses due to harmonics into account during heat-run tests.

References

Buckmaster, D., Hopkinson, P., Shertukde, H., Wharton, P., Transformers used with alternative energy sources: Wind and solar. Technical Presentation, IEEE PES Transformers Committee, San Diego, CA, April 11, 2011.

IEEE Std. C57.12.00, *General Requirements for Liquid-Immersed Distribution, Power and Regulating Transformers*.

IEEE Std. C57.91, *IEEE Guide for Loading Mineral-Oil-Immersed Transformers*, 1995, Correction 1-2002.

IEEE Std. C57.18.10a, *IEEE Standard Practices Requirements for Semiconductor Power Rectifier Transformers*, 1998 (amend 2008).

IEEE Std. C57.110, *IEEE Recommended Practice for Establishing Liquid-Filled and Dry-Type Power and Distribution Transformer Capability when Supplying Non-Sinusoidal Load Current*, 2008.

IEEE Std. C57.116, *IEEE Guide for Transformers Directly Connected to Generators*, 1989.

www.EngineeringEbooksPdf.com

IEEE Std. C57.129, IEEE standard for general requirements and test code for oil-immersed HVDC convertor transformer, 1999 (2007-Approved).

IEEE Std. 1547.4, Draft guide for design, operation and integration of distributed resource island systems with electric power system, only 1547.1 is there, 2005.

Salient Features of Distributed Photo Voltaic (DPV): Grid Transformers as relevant to its Theory, Design, Manufacture, Operation and Maintenance in the field or in a manufacturer's plant*, DPV-Grid Transformer Task Force Members, IEEE PES Transformers Committee, Power Transformers Sub Committee, Hemchandra M. Shertukde, Chair, Mathieu Sauzay, Vice Chair, Aleksandr Levin, Secretary, Enrique Betancourt, C J Kalra, Sanjib K Som, Jane Verner, Subhash Tuli, Steve Schroeder, Bill Chu. White paper in preparation for final presentation at the *IEEE PES Transformers Committee conference*, San Diego, CA, April 10–14, 2011.

UL 1741, A safety standard for distributed generation, 2004.

www.EngineeringEbooksPdf.com

www.EngineeringEbooksPdf.com

11

Reactors

11.1 Reactors **11**-2

11.2 Background and Historical Perspective **11**-2

11.3 Applications of Reactors **11**-4
General Overview • Current Limiting Reactors • Capacitor Reactors • Discharge Current Limiting Reactors • Power Flow Control Reactors • Shunt Reactors (Steady-State Reactive Compensation) • Thyristor Controlled Reactors (Dynamic Reactive Compensation) • Filter Reactors • Reactors for HVDC Application • Series Reactors for Electric Arc Furnace Application • Other Reactors

11.4 Some Important Application Considerations **11**-24
Short Circuit: Basic Concepts • Phase Reactors vs. Bus Tie Reactors • Power Line Balance • Reactive Power Balance

11.5 Shunt Reactors and Switching Transients **11**-30
Current Chopping • Restrike

11.6 Current Limiting Reactors and Switching Transients **11**-33
Definitions • Circuit Breakers TRV Capabilities • TRV Evaluation • TRV Mitigation Methods

11.7 Reactor Loss Evaluation **11**-35
Reactor Losses • Basic Concepts for Loss Evaluation • Operational Benefits of Loss Evaluation

11.8 De-Q'ing **11**-37
Paralleled Reactor and Resistor • Reactor with a De-Q'ing Ring • Summary

11.9 Sound Level and Mitigation **11**-41
General • Oil-Immersed Reactors • Air-Core Reactors

11.10 Line Traps and Power Line Carrier Communication/Data/Protective Relaying Systems **11**-43
Coupling Equipment and Hybrids • Receiver–Transmitter Equipment

11.11 Installation Considerations for Dry-Type Air-Core Reactors **11**-48
Introduction • Notes on Safety • Transport and Receiving Inspection • Installation • Partial Indoor Installation • Room Ventilation

References **11**-53

Richard F. Dudley
Trench Limited

Michael Sharp
Trench Limited

Antonio Castanheira
Trench Limited

Behdad B. Biglar
Trench Limited

www.EngineeringEbooksPdf.com

11.1 Reactors

Reactors, like capacitors, are basic to and an integral part of both distribution and transmission power systems. Depending on their function, reactors are either connected in shunt or in series with the network, singularly (current limiting reactors, shunt reactors) or in conjunction with other basic components such as power capacitors (shunt capacitor switching reactors, capacitor discharge reactors, filter reactors).

Reactors are utilized to provide inductive reactance in power circuits for a wide variety of purposes. These include fault current limiting, inrush current limiting for capacitors and motors, harmonic filtering, VAR compensation, reduction of ripple currents, blocking of power line carrier signals, neutral grounding, damping of switching transients, flicker reduction for arc furnace applications, circuit de-tuning, load balancing, and power conditioning. Reactors may be installed at any industrial, distribution, or transmission voltage level and may be rated for any current duty from a few amperes to tens of thousands of amperes and fault current levels of up to hundreds of thousands of amperes.

11.2 Background and Historical Perspective

Reactors can be either dry type or oil immersed. Dry-type reactors may be of air-core or iron-core construction. In the past, dry-type air-core reactors were only available in open style construction (Figure 11.1); their windings held in place by a mechanical clamping system and the basic insulation provided by the air space between turns. Modern dry-type air-core reactors (Figure 11.2) feature fully encapsulated windings with the turns insulation provided by film, fiber, or enamel dielectric. Oil-immersed reactors may be of gapped iron-core (Figure 11.3) or magnetically shielded construction. The application range for the different reactor technologies has undergone a major realignment from historical usage. In the past, dry-type air-core reactors (open style winding technology) were limited to applications at distribution voltage class. Modern dry-type air-core reactors (fully encapsulated with

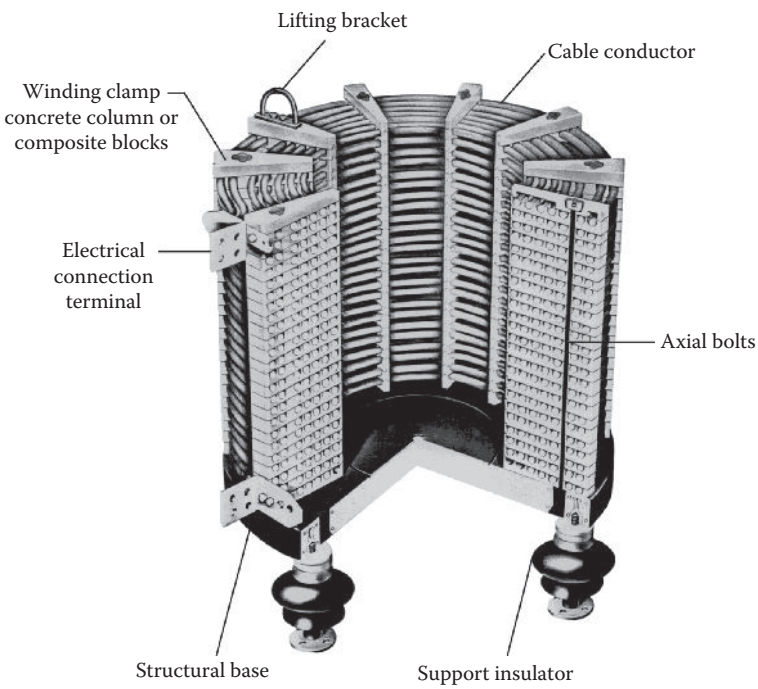

FIGURE 11.1 Open style reactor.

www.EngineeringEbooksPdf.com

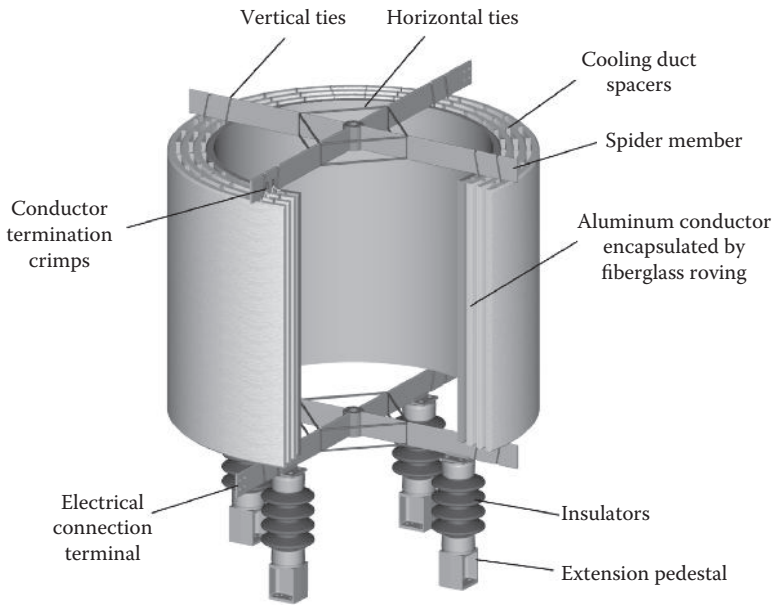

FIGURE 11.2 Modern fully encapsulated reactor.

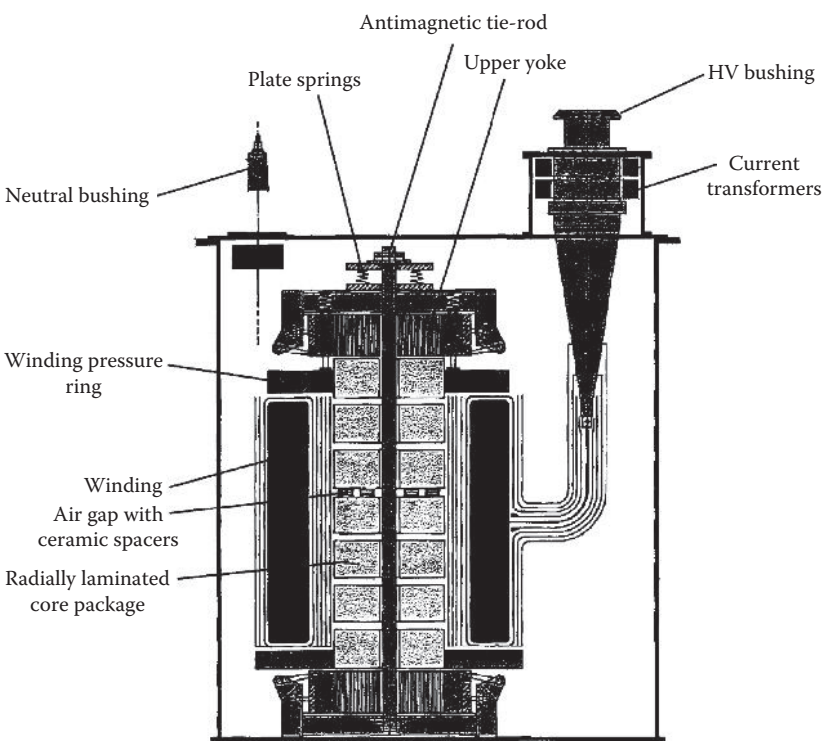

FIGURE 11.3 Gapped iron-core oil-immersed reactor.

www.EngineeringEbooksPdf.com

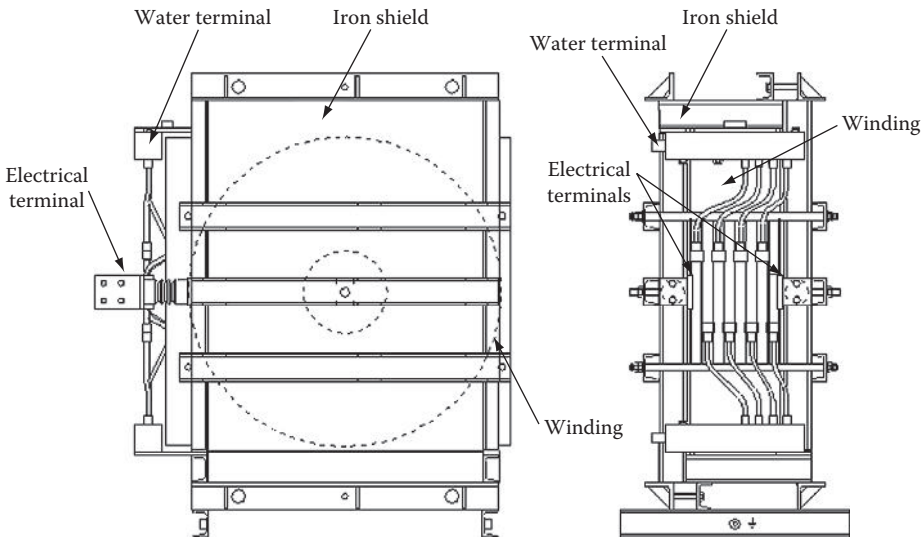

FIGURE 11.4 Dry-type iron-core reactor (water cooled).

solid dielectric insulated windings) are employed over the full range of distribution and transmission voltages, including EHV (high voltage series reactors) and HVDC (filter reactors, smoothing reactors). Oil-immersed reactors are primarily used for EHV shunt reactor and for some HVDC smoothing reactor applications. Dry-type iron-core reactors (Figure 11.4) are usually used at low voltage and indoors, for applications such as harmonic filtering and power conditioning (d*i*/d*t*, smoothing, etc.). Applicable IEEE standards, such as IEEE C57.21-1990 (R1995); IEEE C57.16-1996 (R2001); and IEEE 1277-2002, reflect these practices [1–3].

These standards provide considerable information not only concerning critical reactor ratings, operational characteristics, tolerances, and test code, but also guidance for installation and important application specific considerations.

11.3 Applications of Reactors

11.3.1 General Overview

Reactors have always been an integral part of power systems. The type of technology employed for the various applications has changed over the years based on design evolution and construction or materials breakthroughs. Dry-type air-core reactors have traditionally been used for current limiting applications due to their inherent linearity of inductance vs. current. For this application, fully encapsulated construction usually became the design of choice, because its improved mechanical characteristics enabled the reactors to withstand higher fault currents. Conversely, high voltage series reactors were initially oil-immersed shielded core designs. However, beginning in the early 1970s, the requirements of these applications were also met by fully encapsulated dry-type air-core designs. Due to such developments, the latest revision of IEEE C57.16-1996 (R2001), the series reactor standard, is now a dry-type air-core reactor standard only.

The construction technology employed for modern shunt reactors, on the other hand, is more dependent on the applied voltage. Transmission class shunt reactors are usually of oil-immersed construction, whereas tertiary connected, secondary connected, or lower voltage direct connect shunt reactors, utilize either dry-type air-core or oil-immersed construction. Hence ANSI/IEEE C57.21-1990 (R1995) covers both oil-immersed and dry-type air-core shunt reactors. A review of modern reactor applications is provided below.

www.EngineeringEbooksPdf.com

11.3.2 Current Limiting Reactors

Current limiting reactors (CLRs) are now used to control short circuit levels in electrical power systems covering the range from large industrial power complexes, to utility distribution networks, and to HV/EHV transmission systems.

CLRs are primarily installed to reduce the short circuit current to levels consistent with the electromechanical and thermal withstand level of circuit components (especially transformers and circuit breakers) and to reduce the short circuit voltage drop on bus sections to levels that are consistent with insulation coordination practice. High fault-currents on distribution or transmission systems, if not limited, can cause catastrophic failure of distribution equipment and present a serious threat to the safety of operating crews. In summary, current limiting reactors are installed to reduce the magnitude of short circuit currents in order to achieve one or more of the following benefits:

- Reduction of electromechanical loading and thermal stresses on transformer windings, thus extending the service life of transformers and associated equipment.
- Improvement of the stability of primary bus voltage during a fault event on a feeder.
- Reduction of current-interrupting duty of feeder circuit breakers.
- Reduction of line-to-line fault current to levels below those of line-to-ground faults or vice versa.
- Protection of distribution transformer and all other downstream power equipment and devices from the propagation of initial fast front voltage transients due to faults and circuit breaker operations.
- Reduction of the requirement for downstream switching devices such as reclosers, sectionalizers, and current limiting fuses.
- Allowance of complete control over the steady-state losses by meeting any specified Q-factor for any desired frequency; this feature is particularly important for networks where high harmonic currents are to be damped without increasing the fundamental frequency loss.
- Increase in system reliability.

CLRs may be installed at different points in the power network and as such they are normally referred to by a name that reflects their location or application. The most common nomenclatures are

Phase reactors—installed in series with incoming or outgoing lines or feeders
Bus tie reactors—used to tie together two otherwise independent buses
Neutral grounding reactors—installed between the neutral of a transformer and ground
Duplex reactors—installed between a single source and two buses

11.3.2.1 Phase Reactors

Figure 11.5 shows the location of phase reactors in the feeder circuits of a distribution system. CLRs may also be applied at transmission voltage levels as shown in Figure 11.6, depicting a 345 kV, 1100 A, 94.7 mH phase reactor installed in a U.S. utility substation.

The main advantage of the illustrated configuration is that it reduces line-to-line and phase-to-ground short circuit current to any desired level at a strategic location in the distribution or transmission system.

Phase reactors are one of the most versatile embodiments of series connected reactors in that they can be installed in one feeder of a distribution system to protect one circuit or at the output of a generator to limit fault contribution to the entire power grid or anywhere in between. Any of the benefits listed in Section 11.3.2 can be achieved with this type of current limiting reactor. The impedance of the phase reactor required to limit the 3Φ short circuit current to a given value, may be calculated using either Equation 11.1 or 11.2:

$$X_{\mathrm{CLR}} = V_{\mathrm{LL}} \frac{[(1/I_{\mathrm{SCA}}) - (1/I_{\mathrm{SCB}})]}{\sqrt{3}} \tag{11.1}$$

www.EngineeringEbooksPdf.com

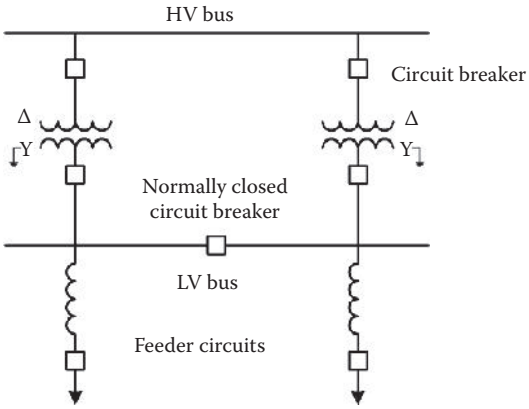

FIGURE 11.5 Typical phase reactor connection.

FIGURE 11.6 345 kV phase reactors.

$$X_{CLR} = V_{LL}^2 \left[\frac{1}{MVA_{SCA}} - \frac{1}{MVA_{SCB}} \right] \tag{11.2}$$

where

X_{CLR} is the reactance of the current limiting reactor, Ω

V_{LL} is the rated system voltage, kV

I_{SCA} or MVA_{SCA} is the required value of the short circuit current or power, *after* the installation of the phase reactor, kA or MVA, respectively

I_{SCB} or MVA_{SCB} is the available value of the short circuit current or power, *before* the installation of the phase reactor, kA or MVA, respectively

11.3.2.2 Bus Tie Reactors

Bus tie reactors are used when two or more feeders or power sources are connected to a single bus and it is desirable to sectionalize the bus due to high fault levels, without losing operational flexibility. Figure 11.7 illustrates the arrangement.

www.EngineeringEbooksPdf.com

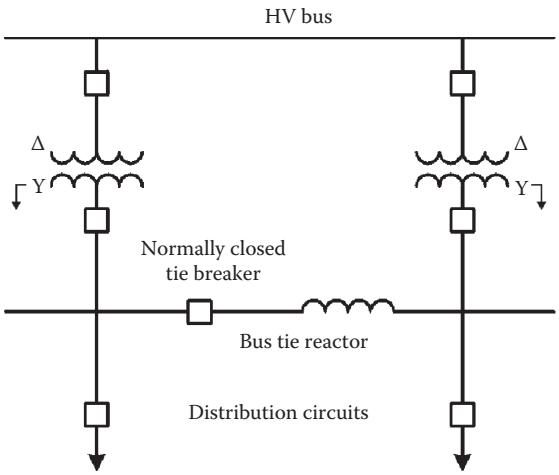

FIGURE 11.7 Typical bus tie reactor connection.

FIGURE 11.8 230 kV bus tie reactors.

As in the case of phase reactors, bus tie reactors may be applied at any voltage level. Figure 11.8 shows an example of a 230 kV, 2000 A, 26.54 mH bus tie reactor installed in a U.S. utility substation.

The advantages of this configuration are similar to those associated with the use of phase reactors. An added benefit is that if the load is essentially balanced on both sides of the reactor under normal operating conditions, the reactor has negligible effect on voltage regulation or system losses.

The required reactor impedance is calculated using either Equation 11.1 or 11.2 for 3Φ faults or Equation 11.3 for single line-to-ground faults.

A method to evaluate the merits of using either phase reactors or bus tie reactors is presented in Section 11.4.2, Phase reactors vs. Bus tie reactors.

11.3.2.3 Neutral Grounding Reactors

Neutral grounding reactors (NGRs) are used to control single line-to-ground faults only. They do not limit line-to-line fault current levels. They are particularly useful at transmission voltage levels, when autotransformers with a delta tertiary are employed.

www.EngineeringEbooksPdf.com

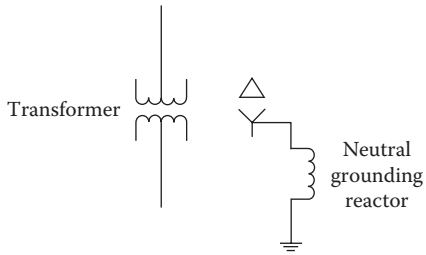

FIGURE 11.9 Typical neutral grounding reactor connection.

These transmission station transformers can be a strong source of zero-sequence currents and, as a result, the ground fault current may substantially exceed the 3Φ fault current. Figure 11.9 shows a typical neutral grounding reactor arrangement.

These devices, normally installed between the transformer or generator neutral and ground, are effective in controlling single line-to-ground faults; since, in general, the system short circuit impedance is largely reactive. NGRs reduce short circuit stresses on station transformers for the most prevalent type of fault in an electrical system.

If the objective is to reduce the single line-to-ground (1Φ) fault, then Equations 11.12 and 11.12a must be used and, after algebraic manipulations, the required neutral reactor impedance, in Ohms, is calculated as

$$X_{NGR} = \frac{\sqrt{3}V_{LL}[(1/I_{SCA}) - (1/I_{SCB})]}{3} \tag{11.3}$$

where

X_{NGR} is the reactance of the neutral grounding reactor, Ω
V_{LL} is the system line-to-line voltage, kV
I_{SCA} is the required single line-to-ground short circuit current *after* the installation of the neutral reactor, kA
I_{SCB} is the available single line-to-ground, short circuit current *before* installation of neutral reactor, kA

A factor to be taken into consideration when applying NGRs is that the resulting X_0/X_1 may exceed a critical value ($X_0 > 10X_1$) and, as a result, give rise to transient overvoltages on the unfaulted phases (See IEEE Std 142-1991, Green Book) [4].

Because only one NGR is required per three-phase transformer and their continuous current is the system unbalance current, the cost of installing NGRs is lower than that for phase CLRs. Operating losses are also lower than for phase CLRs and steady-state voltage regulation need not be considered with their application.

The impedance rating of a neutral grounding reactor may be calculated using Equation 11.1, provided both the short circuit currents before and after the NGR installation are the single line-to-ground faults.

Although NGRs do not have any direct effect on line-to-line faults, they are of significant benefit since most faults start from line-to-ground, some progressing quickly to a line-to-line fault if fault side energy is high and the fault current is not interrupted in time. Therefore, the NGR can contribute indirectly to a reduction in the number of occurrences of line-to-line faults by reducing the energy available at the location of the line-to-ground fault.

11.3.2.3.1 Generator Neutral Grounding Reactors

The positive, negative, and zero sequence reactances of a generator are not equal and as a result, when its neutral is solidly grounded, its line-to-ground short circuit current is usually higher than the three-phase short circuit current [5]. However, generators are usually required to withstand only the

www.EngineeringEbooksPdf.com

three-phase short circuit current and a grounding reactor or a resistor should be employed to lower the single line-to-ground fault current to an acceptable limit. Other reasons for the installation of a neutral grounding device are listed below:

- A loaded generator can develop a third-harmonic voltage; and when the neutral is solidly grounded, the third-harmonic current may approach the generator rated current. Providing impedance in the grounding path can limit the third-harmonic current.
- When the neutral of a generator is solidly grounded, an internal ground fault can produce large fault currents that may damage the laminated core and may lead to a lengthy and costly repair procedure.

11.3.2.3.1.1 Ratings The reactance value required for limiting a single line-to-ground fault to the same value as a three-phase fault current can be calculated by the following formula:

$$X_{\mathrm{NGR}} = \frac{X_{\mathrm{d}}'' - X_{\mathrm{m0}}}{3} \tag{11.4}$$

where

X_{NGR} is the reactance of the neutral-grounding reactor, Ω
X_{d}'' is the direct axis sub-transient reactance of the machine, Ω
X_{m0} is the zero-sequence reactance of the machine, Ω

Equation 11.4 assumes that the negative sequence reactance is equal to X_{d}''. In the absence of complete information, the value of reactance calculated using Equation 11.4 is satisfactory. Equations presented in Chapter 19 of the Westinghouse T&D Reference Book [6] can also be used when the negative sequence reactance of the generator is not equal to X_{d}''.

The short circuit current rating of the grounding reactor is equal to the three-phase generator short circuit current, when the machine is an isolated generator or operating in a unit system (see Figure 11.10). When more than one generator is connected to a shared bus and not all of them are grounded by a reactor with a reactance calculated from Equation 11.4, the short circuit current rating of the reactor in question should be calculated by using proper system constants for a single line-to-ground fault at the terminal of the machine being grounded. Equations in Chapter 19 of the Westinghouse T&D Reference Book can be employed for this case.

The rated short circuit duration for the grounding reactor shall also be specified. When reactors are used for a single isolated generator or in a unit system, a 10 s rating is usually employed. When grounding reactors are used in systems having feeders at generator voltage, a 1 min rating is usually employed to accommodate for repetitive feeder faults.

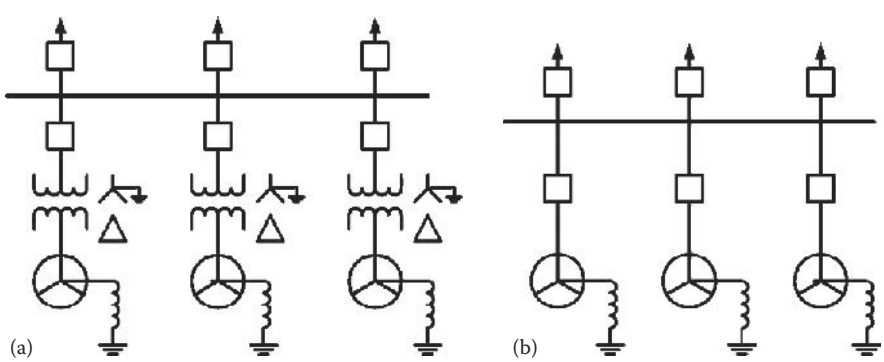

FIGURE 11.10 Two generator arrangements where a reactor can be used as a neutral grounding device; unit system (a) and three-wire system (b).

www.EngineeringEbooksPdf.com

The rated continuous current of the grounding reactor should be specified considering the allowable unbalance current and third harmonic current. In the absence of this information, 3% of the reactor short circuit rating can be specified as the continuous current rating when the duration of the rated short circuit current is 10 s. In cases when the rated short circuit duration is 1 min, 7% of rated short circuit current is recommended as the rated continuous current. See IEEE Std. 32–1972 for more information [7].

Insulation class and associated BIL rating should be specified based on the reactor voltage drop, during a single line-to-ground fault, and the nominal system voltage. Refer to Table 4 of IEEE Std. 32–1972.

11.3.2.3.1.2 Transient Overvoltages When the neutral of a generator is not solidly grounded, transient overvoltages can be expected. These overvoltages are usually caused by phase-to-ground arcing faults in air, or a switching operation followed by one or more restrikes in the breaker. When a grounding reactor is used for generator neutral grounding, the X_0/X_1 ratio at the generator terminals shall be less than 3 to keep transient overvoltages within an acceptable level (X_0 and X_1 are the resultant of the generator and system zero and positive sequence reactances, respectively). When a neutral reactor installation is intended only for reduction of a single line-to-ground fault to the three-phase fault level, X_0/X_1 is equal to 1, which is a safe ratio in terms of imposed transient overvoltages.

11.3.2.4 Arc Suppression Reactors (Petersen Coils)

An arc suppression coil is a single-phase, variable inductance, oil-immersed, iron-core reactor that is connected between the neutral of a transformer and ground for the purpose of achieving a resonant neutral ground. The zero sequence impedance of the transformer is taken into consideration in rating the inductance of the arc suppression coil. The adjustment of inductance is achieved in steps by means of taps on the winding or can be continuously adjusted by varying the reluctance of the magnetic circuit; the length of an air gap is adjusted by means of a central moveable portion of the core (usually motor driven) (see Figure 11.11). The inductance is adjusted, in particular, during nonground fault conditions, to achieve cancellation of the capacitive ground fault current, so that in the case of a single line-to-ground fault, cancellation of the capacitive fault current is achieved with an inductive current of equal magnitude. Current injection by an active component (power converter) into the neutral, usually through an auxiliary winding of the arc suppression coil, can also provide cancellation of the resistance component of the fault current. See Figures 11.12 and 11.13, which illustrate this principle. Resonant grounding is used in distribution systems in Europe, parts of Asia, and in a few areas of the U.S. The type of system ground employed is a complex function of system design, safety considerations, contingency (fault) operating practices, and legislation. Arc suppression reactors are typically used to the best advantage on distribution systems with overhead lines, to reduce intermittent arcing-type single line-to-ground faults, which may otherwise occur on ungrounded systems.

11.3.2.5 Duplex Reactors

Duplex reactors are usually installed at the point where a large source of power is split into two simultaneously and equally loaded buses (Figure 11.14). They are designed to provide low rated reactance under normal operating conditions and full rated or higher reactance under fault conditions. A duplex reactor consists of two magnetically coupled coils per phase. This magnetic coupling, which is dependent upon the geometric proximity of the two coils, determines the properties of a duplex reactor under steady-state and short circuit operating conditions. During steady-state operation, the magnetic fields produced by the two windings are in opposition, and the effective reactance between the power source and each bus is a minimum. Under short circuit conditions, the linking magnetic flux between the two coils becomes unbalanced, resulting in higher impedance on the faulted bus, thus restricting the fault current.

The voltage on the unfaulted bus is supported significantly until the fault is cleared, both by the effect of the reactor impedance between the faulted and unfaulted buses and also by the "voltage boosting" effect caused by the coupling of the faulted leg with the unfaulted leg of duplex reactors.

www.EngineeringEbooksPdf.com

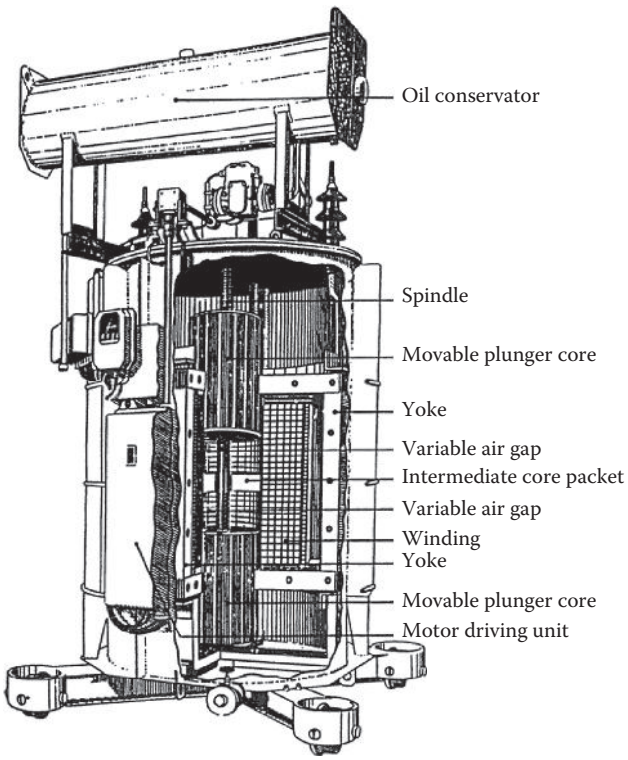

FIGURE 11.11 Arc suppression reactor.

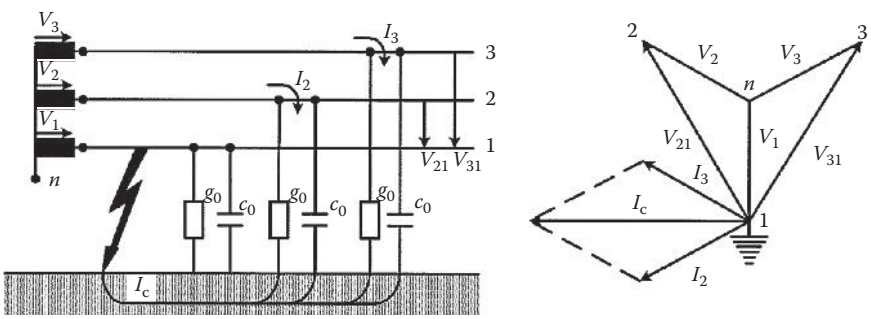

FIGURE 11.12 Single line-to-ground fault in nongrounded system.

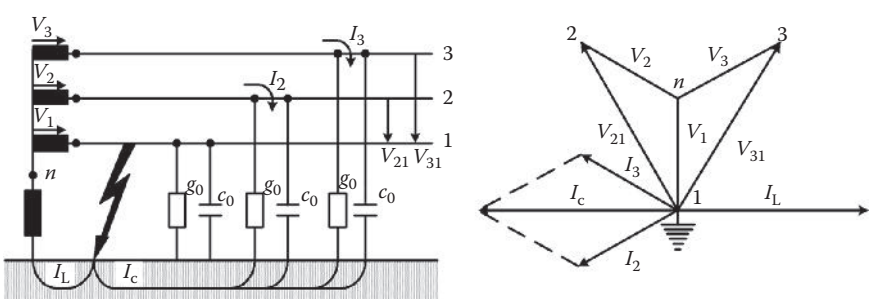

FIGURE 11.13 Single line-to-ground fault in resonant-grounded system.

www.EngineeringEbooksPdf.com

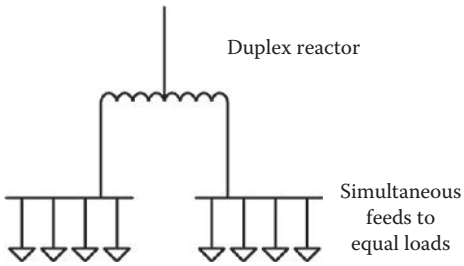

FIGURE 11.14 Typical duplex reactors connections.

The impedance of a duplex reactor can be calculated using Equations 11.1 and 11.2, the same as those used for phase reactors.

11.3.3 Capacitor Reactors

The application of power capacitors in transmission and distribution systems has long been accepted as a viable and practicable solution for VAR and voltage support, power factor correction, and power quality problems. However, this solution approach does not come without application ramifications. The application of capacitors in power systems may create abnormal transient and steady-state conditions such as the following:

- Back-to-back switching current may result in damage to the capacitor switching device
- Fault outrush current may damage other switching devices in the station
- Transient overvoltages in the capacitor bank current transformer
- Creation of a low impedance path for high order harmonics in the system, resulting in harmonic overloading of capacitor cans

Capacitor reactors are the only power product, among other available equipment such as breakers equipped with a pre-insertion resistor or inductor or point on wave switching devices, that can address all of the above problems. Figure 11.15 is a photo of a typical installation.

FIGURE 11.15 550 kV capacitor reactor.

www.EngineeringEbooksPdf.com

11.3.3.1 Current Transients during Switching of Capacitor Banks

Unlike voltage transients, current transients associated with capacitor switching are mainly confined to the station in which the switched capacitor banks are installed. Current transients associated with capacitor switching are high in magnitude and frequency and failing to limit these transients can lead to serious damage to

- Switching devices such as circuit breakers and circuit switchers, and
- Current transformers.

The circuit breakers capability to "make" capacitive transient currents is standardized in all major circuit breaker standards including ANSI C37.06 and IEC 60265 [8,9]. IEEE categorizes circuit breakers into two groups regardless of the arc interruption medium. One group is general-purpose breakers, which have limited capabilities to energize and de-energize isolated capacitor banks. The other group is definite-purpose circuit breakers, which have increased capabilities for switching capacitor banks. Table 11.1 shows the IEEE ratings for two 145 kV outdoor circuit breakers.

In substations with capacitor bank installations, there are two switching scenarios that may lead to current transients that can exceed circuit breaker capabilities. These scenarios are presented in the following clauses.

11.3.3.1.1 Back-to-Back Switching

Back-to-back switching, by definition, occurs when energizing an individually switched capacitor bank while there are one or more capacitor banks already energized at the same voltage level. Figure 11.16 illustrates an example of a back-to-back switching condition. In this example the transient

TABLE 11.1 Back-to-Back Switching Capability

Circuit Breaker Type	Rated Voltage (kV)	Rated Short Circuit Current (kA)	Maximum Back-to-Back Current (kA_{peak})	Maximum Rate of Rise of Current (A/μs)[a]
Definitive purpose	145	63	16	427
General purpose	145	63	50	125

[a] This value is often expressed as the current and frequency product ($I \cdot f$), which is equal to 2×10^7 A/s for general-purpose breakers and 6.8×10^7 A/s for definite-purpose breakers.

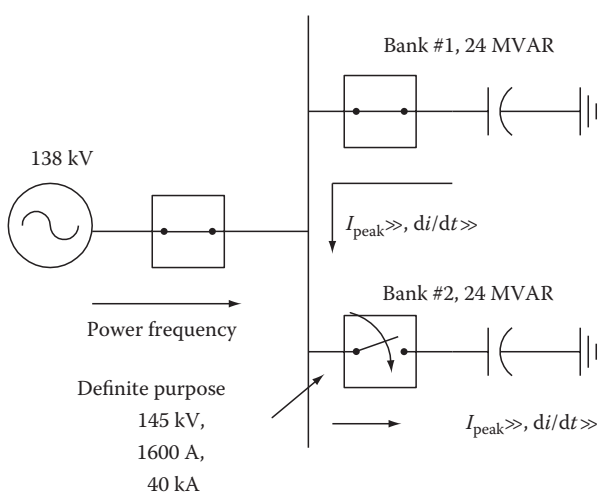

FIGURE 11.16 Back-to-back switching in a 138 kV substation.

www.EngineeringEbooksPdf.com

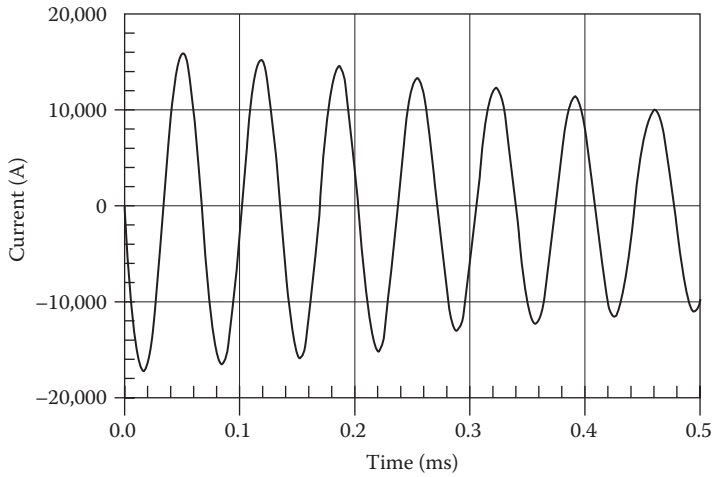

FIGURE 11.17 Back-to-back current in the first pole to close of bank number 2 circuit breaker.

current is simulated when energizing bank number 2. If the first pole of the breaker closes at the peak of the bus voltage, all the energy stored inside bank number 1 will be discharged into bank number 2 through its switching device. The only inductive element in the circuit that can control the rate of rise of current is the inherent reactance of the buses. In this example the length of the bus bar between two units is 200 ft.

Figure 11.17 shows the back-to-back current in the first pole to close of bank number 2 circuit breaker. The peak of the current is 17.2 kA and the rate of rise of current is 1600 A/μs (15 kHz). Neither a general-purpose nor a definite-purpose circuit breaker is able to withstand this type of current transient, during closing of its contacts (see Table 11.1).

Installation of a 265 μH capacitor reactor in series with either of the capacitor banks and between the bank and its circuit breaker can reduce the magnitude and frequency of the back-to-back current to an acceptable level for a definite-purpose circuit breaker.

Figure 11.18 shows the circuit with a capacitor reactor added and the back-to-back current after capacitor reactor installation. Since there are only two individually switched capacitor banks in this station, only one back-to-back capacitor reactor is sufficient to mitigate any back-to-back switching operation.

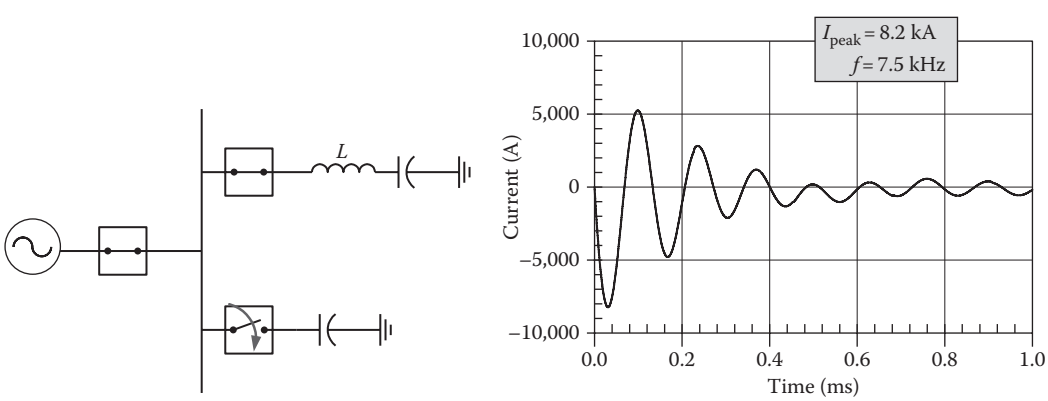

FIGURE 11.18 Back-to-back current after installation of a back-to-back capacitor reactor (right), in the circuit (left).

www.EngineeringEbooksPdf.com

11.3.3.1.2 Fault Outrush Current

Unlike back-to-back switching, which only impacts the capacitor bank switching device, outrush current also creates a difficult switching condition for other circuit breakers in the station. An outrush condition occurs, when a circuit breaker closes into a fault. In this condition, the charge stored in all capacitor banks connected to the bus will be discharged through that circuit breaker in a very short period of time. Similar to the back-to-back switching scenario, outrush current frequency and magnitude may be high and damaging for circuit breakers. Often, capacitor banks are equipped with special types of circuit breakers such as specific breakers with a pre-insertion resistor or reactor or circuit breaker with point on wave switching mechanism that can limit back-to-back current transients without utilizing a capacitor reactor. However none of these devices are capable of protecting other circuit breakers in the station against damaging outrush conditions.

Figure 11.19 shows an example of an outrush-current scenario. Rate of rise of current in the breaker is 2600 A/μs, which is well above the acceptable limit for any type of circuit breaker. To reduce the rate of rise of current, outrush reactors must be employed. In a typical substation all of the circuit breakers, except the ones used to switch the capacitor bank, are general-purpose type and outrush reactors must be rated based on the use of general-purpose breakers. A set of three single-phase 900 μH reactors can be employed to control the outrush current in the above example. Figure 11.20 shows the location of the outrush reactor and outrush current after installation of the reactor.

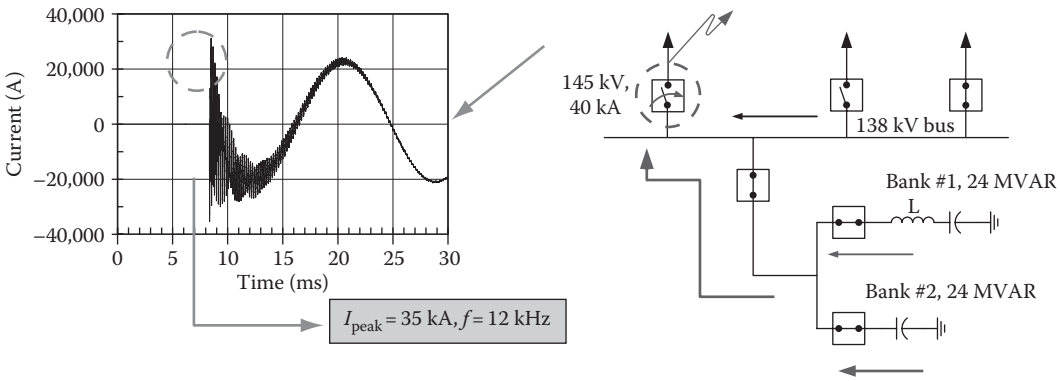

FIGURE 11.19 Circuit condition that leads to outrush current (right), outrush current (left).

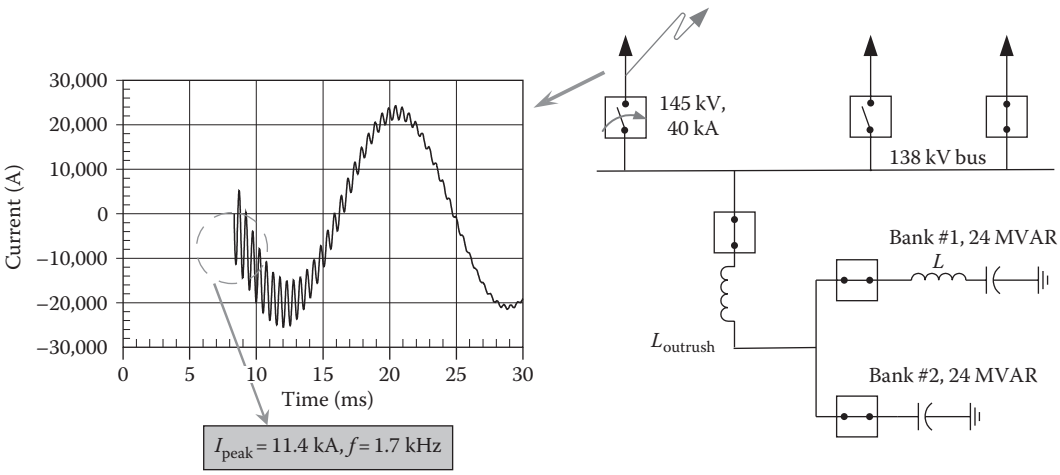

FIGURE 11.20 Location of the outrush reactor in the circuit (right) and outrush current after reactor installation (left).

www.EngineeringEbooksPdf.com

11.3.3.2 Harmonic Overloading

Application of nonlinear loads and devices such as FACTS, static VAR compensators, and arc furnaces introduce a wide spectrum of harmonics into the power system. Harmonics tend to flow from the harmonic source to the lowest impedance path. Normally, the utility source represents the lowest impedance for low order harmonics and therefore acts as a sink for those harmonics. Whereas for high order harmonics, capacitor banks and the inherent inductance in the circuit or transformer leakage reactance can interact to form a series resonant circuit that creates the lowest impedance path. Resultant inflow of high order harmonics can cause dielectric and thermal damage to capacitor cans. The flow of high order harmonics can also induce vibration in the capacitor cans causing audible noise and mechanical damage. This problem can be rectified in three different ways:

1. Relocating the capacitor bank
2. Removal of neutral ground
3. De-tuning the bank

De-tuning is very cost effective especially at the design stage of the project, when outrush reactors have not been installed. Since de-tuning normally requires a reactor with higher inductance than normally required for a pure outrush reactor application, station designers can always achieve these two goals by sizing the reactor based on the de-tuning application.

11.3.4 Discharge Current Limiting Reactors

High voltage series capacitor banks are utilized in transmission systems to improve stability operating limits. Series capacitor banks may be supplied with a number of discrete steps, insertion or bypass being achieved using a switching device. For contingencies, a bypass gap is also provided for fast bypass of the capacitors. In both cases, bypass switch closed or bypass gap activated, a discharge of the capacitor occurs, and the energy associated with the discharge must be limited by a damping circuit. A discharge current limiting reactor is an integral part of this damping circuit. Therefore, the discharge current limiting reactor must be designed to withstand the high frequency discharge current superimposed on the system power frequency current. The damping characteristic of this reactor is a critical parameter of the discharge circuit. Sufficient damping may be provided as an integral component of the reactor design (de-Q'ing), or can be supplied as a separate element (resistor) (see Figure 11.21).

11.3.5 Power Flow Control Reactors

A more recent application of series reactors in transmission systems is that of power flow control (Figure 11.22) or its variant, overload mitigation.

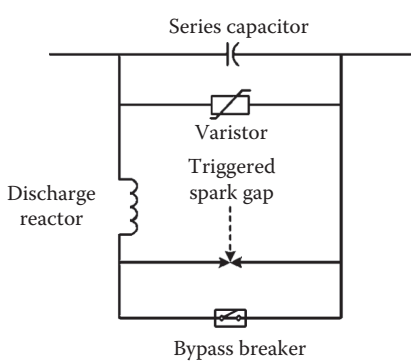

FIGURE 11.21 Typical discharge current limiting reactor connection.

www.EngineeringEbooksPdf.com

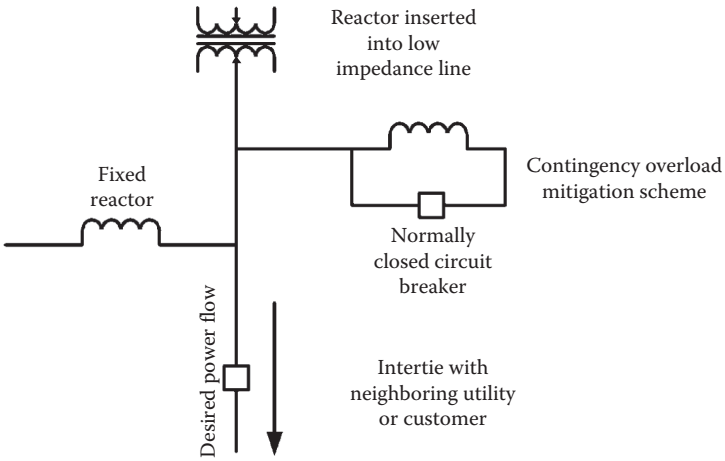

FIGURE 11.22 Typical high voltage power flow control reactor connections.

The flow of power through a transmission system is a function of the path impedance and the complex voltage (magnitude and phase) at the ends of the line. In interconnected systems, the control of power flow is a major concern for the utilities, because unscheduled power flow may give rise to a number of problems such as

- Overloading of lines
- Increased system losses
- Reduction in security margins
- Contractual violations concerning power import and export
- Increase in fault levels beyond equipment rating

Typical power flow inefficiencies and limitations encountered in modern power systems may be the result of one or more of the following:

- Nonoptimized parallel line-impedances resulting in one line reaching its thermal limit well before the other line, thereby limiting peak power transfer.
- Parallel lines having different X/R ratios: a significant reactive component will flow in the opposite direction to that of the active power flow.
- High loss line more heavily loaded than lower loss parallel line, resulting in higher power transfer losses.
- "Loop flow" (the difference between scheduled and actual power flow): although inherent to interconnected systems, loop flows may be so severe as to adversely affect the system reliability.

Power flow control reactors are used to optimize power flow on transmission lines through a modification of the transfer impedance. As utility systems grow and the number of interties increases, parallel operation of AC transmission lines is becoming more common in order to provide adequate power to load centers. In addition, the complexity of contemporary power grids results in situations where the power flow experienced (by a given line of one utility) can be affected by switching, loading, and outage conditions occurring in another service area.

Strategic placement of power flow reactors may serve to increase peak power transfer, reduce power transfer loss, and improve system reliability. The paper "A modern alternative to power flow control" [10], provides a good case study. The insertion of high voltage power flow control reactors in a low impedance circuit allows parallel lines to reach their thermal limits simultaneously and hence optimize peak power transfer at reduced overall losses. Optimum system performance may be achieved by insertion of one reactor rating to minimize line losses during periods of off peak power transfer and one of

www.EngineeringEbooksPdf.com

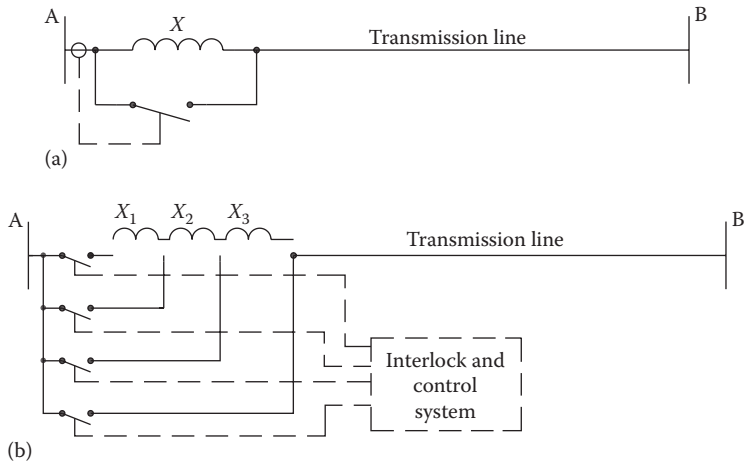

FIGURE 11.23 Switchable power control reactor; (a) tapped switchable power control reactor (b).

an alternative rating to achieve simultaneous peak power transfer on parallel lines during peak load periods or contingency conditions.

Contingency overload mitigation reactor schemes are used when the removal of generation sources or lines in one area affects the loading of other lines feeding the same load center. This contingency may overload one or more of the remaining lines. The insertion of series reactors, shunted by a normally closed breaker, in the potentially overloaded lines keeps the line current below thermal limits. The parallel breaker carries the line current under normal line loading conditions and the reactor is switched into the circuit only under contingency situations.

Figure 11.23a shows a switchable power flow control reactor. In this system, a current transformer is being used to detect any overload condition in the line. Upon detection of an overload condition the control system will trip the bypassing device and insert the reactor in series with the transmission line.

With the ever changing power grids, sometimes one single impedance value is not always suitable for all the different grid topologies. Grid topology may change a few times during the year, due to seasonal loading characteristics, or in the future, as a consequence of adding new generation facilities or loads to the grid. To adapt to these changes, one solution is to employ tapped switchable power flow control reactors. Figure 11.23b shows a tapped switchable power flow control reactor using a "make and break" switching scheme. This system employs six load switchers, which can change the impedance under load. Control and interlocking circuitry is used to avoid unwanted switching.

11.3.6 Shunt Reactors (Steady-State Reactive Compensation)

High voltage transmission lines, particularly long ones, generate a substantial amount of leading reactive power when lightly loaded. Conversely, they absorb a large amount of lagging reactive power when heavily loaded. As a consequence, unless the transmission line is operating under reactive power balance, the voltage on the system cannot be maintained at rated values.

$$\text{Reactive Power Balance} = \text{Total Line Charging Capacitive VARs} - \text{Line Inductive VARs}$$

To achieve an acceptable reactor power balance, the line must be compensated for a given operational condition. For details of the definition of reactive power balance, please refer to Section 11.4.3. Under heavy load, the power balance is negative and capacitive compensation (voltage support) is required. This is usually supplied by the use of shunt capacitors. Conversely, under light load, the power balance is positive and inductive compensation is required. This is usually supplied by the use of shunt reactors.

www.EngineeringEbooksPdf.com

The large inherent capacitance of lightly loaded transmission systems may cause two types of overvoltage in the system that can be controlled by employing shunt reactors. The first type of overvoltage occurs when the leading capacitive charging current of a lightly loaded, long, transmission line flows through the inductance of the line and the system. This is referred to as Ferranti effect; operating voltage increases with distance along the transmission line. Lagging reactive current consumed by a shunt reactor reduces the leading capacitive charging current of the line and thus reduces the voltage rise.

Another type of overvoltage is caused by the interaction of line capacitance with any saturable portion of system inductive reactance; ferroresonance. When switching a transformer terminated line, the voltage at the end of the line may rise to a sufficient value to saturate the transformer inductance. Interaction between this inductance and the capacitance of the line can generate harmonics causing overvoltages. Application of a shunt reactor on the tertiary of the transformer can mitigate this type of overvoltage by reducing the voltage to values below that at which saturation of the transformer core can occur and also provide a low nonsaturable inductance in parallel with the transformer impedance.

Shunt reactors may be connected to the transmission system through a tertiary winding of a power transformer connected to the transmission line being compensated; typically 13.8, 34.5, and 69 kV. Tertiary connected shunt reactors (Figure 11.24) may be of dry-type air-core single-phase per unit construction or oil-immersed three-phase or oil-immersed single-phase per unit construction.

Alternatively, shunt reactors can be connected directly to the transmission line to be compensated. Connection may be at the end of a transmission line or at an intermediate point, depending on voltage profile considerations. Directly connected shunt reactors are usually of oil-immersed construction (Figure 11.24).

Tertiary connected shunt reactors (Figure 11.24), which may be of dry-type or oil-immersed construction, have several operational differences from direct connect shunt reactors; some of which are as follows:

- Tertiary connect shunts reactors require a simple protection scheme.
- Switchgear for the tertiary connect shunt reactors is less expensive.
- They can be installed in independently switched small MVAR banks which make the operation more flexible and also do not impose any significant voltage dip during the switching.

Despite some of the operational benefits listed above, usage of tertiary connect shunts depends on the available capacity on the tertiary of the transformer. In most cases, there is enough unused capacity in the tertiary that full compensation can be achieved through the use of a tertiary connect shunt reactor. Figure 11.25 is a photo of typical tertiary connected shunt reactors. However, in cases when there is not enough capacity for full compensation on the tertiary side, or for any other reason a tertiary connect shunt cannot be employed, an alternative approach is secondary connect shunt reactor. As implied by its name, a secondary connect shunt reactor is connected to the secondary of the transformer. Secondary connect shunt reactors will not impose any extra loading on the transformer since shunt reactors are switched during the light load hours of the day or during the light load season of

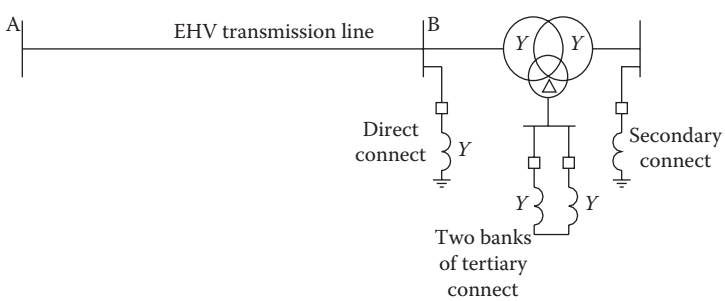

FIGURE 11.24 Typical shunt reactor connections.

www.EngineeringEbooksPdf.com

FIGURE 11.25 20 kV, 20 MVA (per phase) tertiary connection shunt reactors.

the year. Secondary connect shunts are also available in oil-immersed and dry-type construction up to 235 kV. For both tertiary and direct connect shunt reactors, protection is an important consideration. Details regarding protection practices can be found in the IEEE paper, "Shunt reactor protection practices" [11] and also in IEEE C37. 109, [12].

Oil-immersed shunt reactors are available in two design configurations; coreless and iron-core (and either self cooled or force cooled). Coreless oil-immersed shunt reactor designs utilize a magnetic circuit or shield that surrounds the coil to contain the flux within the reactor tank. The steel core that normally provides a magnetic flux path through the primary and secondary windings of a power transformer is replaced by insulating support structures resulting in an inductor that is nearly linear with respect to applied voltage. Conversely, the magnetic circuit of an oil-immersed iron-core shunt reactor is constructed in a manner similar to that used for power transformers with the exception that an air gap or distributed air gap is introduced to provide the desired reluctance. Because of the very high permeability of the core material, the reluctance of the magnetic circuit is dominated by the air gap; magnetic energy is primarily stored in the air gap. Inductance is less dependent on core permeability and core saturation does not occur in the normal steady-state current operating range resulting in a linear inductance. A distributed air gap is employed to minimize fringing flux effects; reduce winding eddy losses (adjacent to the gaps); and improve ampere turns efficiency. Both types of oil-immersed shunt reactors can be constructed as single-phase or three-phase units and are similar in appearance to conventional power transformers.

11.3.7 Thyristor Controlled Reactors (Dynamic Reactive Compensation)

As the network operating characteristics approach system limits, such as dynamic or voltage stability, or in the case of large dynamic industrial loads, such as arc furnaces, the need for dynamic compensation arises.

Typically, static VAR compensators (SVCs) are used to provide dynamic compensation at a receiving end bus, through microprocessor control, for maintaining a dynamic reserve of capacitive support when there is a sudden need.

Figure 11.26 illustrates a typical configuration for an SVC. Figure 11.27a shows the voltage and current in one phase of a TCR when α is not zero. Figure 11.27b depicts the various harmonic current spectra, as a percentage of fundamental current, generated by the TCR for various firing angles "α."

By varying the firing angle, α, of the thyristor controlled reactor (TCR), the amount of current absorbed by the reactor can be continuously varied. The reactor then behaves as an infinitely variable inductance.

www.EngineeringEbooksPdf.com

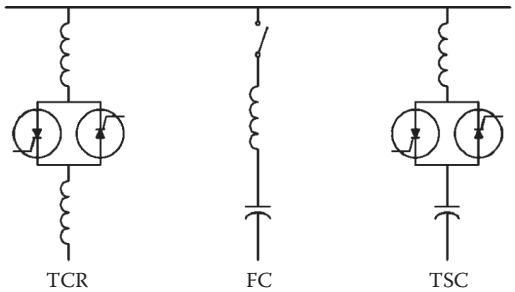

FIGURE 11.26 Static VAR compensator.

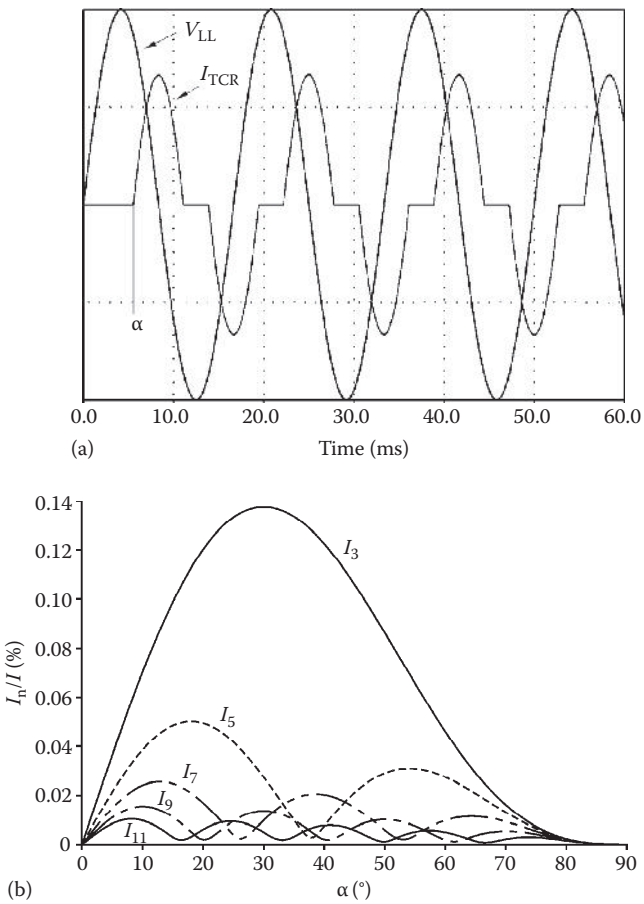

FIGURE 11.27 (a) TCR current and voltage waveforms. (b) TCR harmonic current spectra as a percentage of fundamental current.

Consequently, the capacitive support provided by the fixed capacitor (FC) and by the thyristor switched capacitor (TSC) can be adjusted to the specific need of the system. The efficiency, as well as voltage control and stability, of power systems is greatly enhanced with the installation of SVCs.

The use of SVCs is also well established in industrial power systems. Demands for increased production and more strict regulations regarding both the consumption of reactive power and disturbance mitigation on the power system may require the installation of SVCs. A typical example of an industrial load which can cause annoyance to consumers, usually in the form of flicker, is the extreme load

www.EngineeringEbooksPdf.com

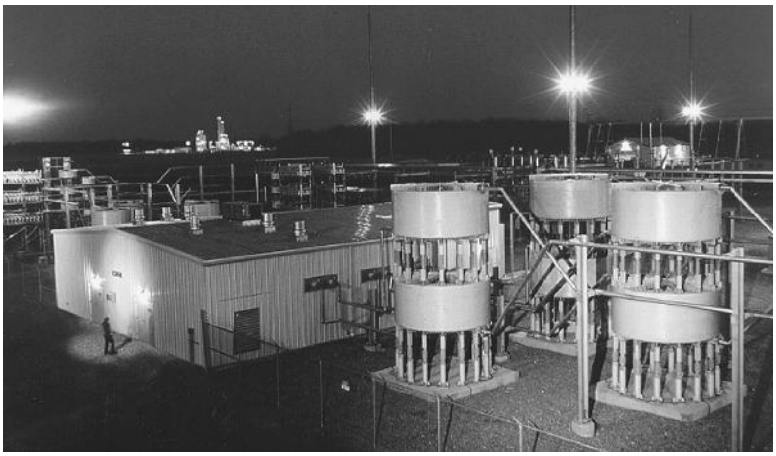

FIGURE 11.28 34 kV, 25 MVAR (per phase) thyristor controlled reactors.

fluctuations of electrical arc furnaces in steel works. A typical installation at a steel mill is shown in Figure 11.28. The thyristor controlled reactors are rated at 34 kV, 710 A, and 25 MVAR per phase.

11.3.8 Filter Reactors

The increasing presence of nonlinear loads and the widespread use of power electronic switching devices in industrial power systems are causing an increase of harmonics in the power system. Major sources of harmonics are industrial arcing loads (arc furnaces, welding devices), power converters for variable speed motor drives, distributed arc lighting for roads, fluorescent lightning, residential sources such as television sets, home computers, etc.

Power electronic switching devices are also applied in modern power transmission systems and include high voltage direct current (HVDC) converters as well as (flexible AC transmission systems (FACTS) devices such as SVCs. Harmonics can have detrimental effects on equipment such as transformers, motors, switchgear, capacitor banks, fuses, and protective relays. Transformers, motors, and switchgear may experience increased losses and excessive heating. Capacitors may fail prematurely from increased heating and higher dielectric stress. If distribution feeders and telephone lines have the same "right-of-way," harmonics may also cause telephone interference problems.

In order to minimize the propagation of harmonics into the connected power distribution or transmission system, shunt filters are often applied close to the origin of the harmonics. Such shunt filters in their simplest embodiment consist of a series inductance (filter reactor) and capacitance (filter capacitor). If more than one harmonic is to be filtered, several sets of filters of different rating are applied to the same bus. More complex filters are also used to filter multiple harmonics.

More background information can be found in the IEEE paper, "Selecting Ratings for Capacitors and Reactors in Applications Involving Multiple Single Tuned Filters" [13].

11.3.9 Reactors for HVDC Application

In an HVDC system, reactors are used for various functions as shown, in principle, in Figure 11.30. The HVDC smoothing reactors are connected in series with an HVDC transmission line or inserted in the intermediate DC circuit of a back-to-back link to reduce the harmonics on the DC side, to reduce the current rise caused by faults in the DC system, and to improve the dynamic stability of the HVDC transmission system.

Filter reactors are installed for harmonic filtering on the AC and on the DC side of the converters. AC filters serve two purposes simultaneously: the supply of reactive power and the reduction of

www.EngineeringEbooksPdf.com

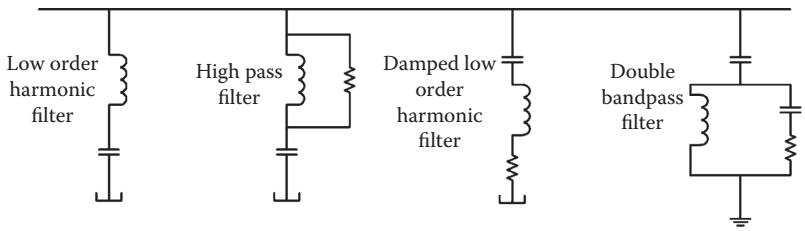

FIGURE 11.29 Typical filter reactor connections.

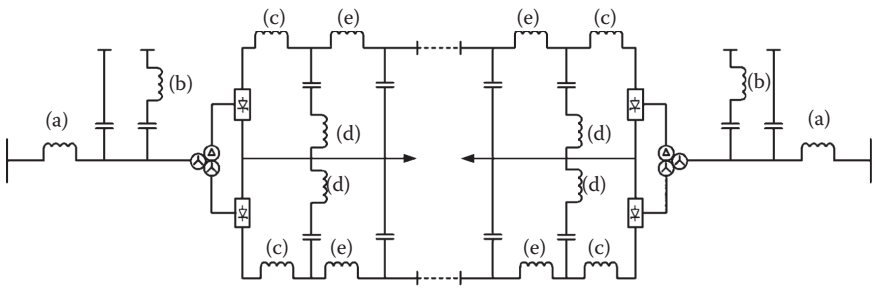

FIGURE 11.30 One line diagram of a typical HVDC bipole link illustrating reactor applications. (a) AC-PLC reactors, (b) AC filter reactors, (c) HVDC smoothing reactors, (d) DC filter reactors, and (e) DC-PLC reactors.

harmonic currents. AC filter reactors are utilized in three types of filter configurations employing combinations of resistors and capacitors, namely single-tuned filters, double-tuned filters, and high-pass filters. A single-tuned filter is normally designed to filter the low order harmonics on the AC side of the converter. A double-tuned filter is designed to filter multiple discrete frequencies using a single combined filter circuit. A high-pass filter is essentially a single-tuned damped filter. Damping flattens and extends the filter response to more effectively cover high-order harmonics. DC filter reactors are installed in shunt with the DC line, on the line side of the smoothing reactors. The function of these DC filter banks is to further reduce the harmonic currents on the DC line (see Figures 11.29 and 11.30).

Power line carrier (PLC) and Radio interference (RI) filter reactors are employed on the AC side, DC side, or both sides of the HVDC converter to reduce high frequency noise propagation in the lines.

11.3.10 Series Reactors for Electric Arc Furnace Application

Series reactors may be installed in the medium voltage feeder (high voltage side of the furnace transformer) of an AC electric arc furnace in order to improve efficiency, reduce furnace electrode consumption, and limit short circuit current (thus reducing mechanical forces on the furnace electrodes). Such reactors may either be "built into" the furnace transformer or are separate, stand-alone units, of oil-immersed or dry-type air-core construction. Usually, the reactors are equipped with taps to facilitate optimization of the furnace performance (see Figures 11.31 and 11.32).

11.3.11 Other Reactors

Reactors are also used in such diverse applications as motor starting (current limiting), test laboratory circuits (current limiting, dv/dt control, di/dt control), and insertion impedance (circuit switchers). Design considerations, insulation system, conductor design, cooling method construction concept (dry type, oil immersed), and subcomponent or subassembly variants (mounting and installation considerations) are selected based on the application requirements.

www.EngineeringEbooksPdf.com

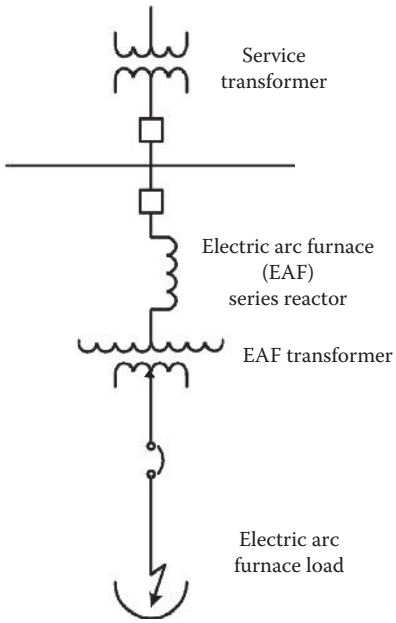

FIGURE 11.31 Typical electric arc furnace series reactor connection.

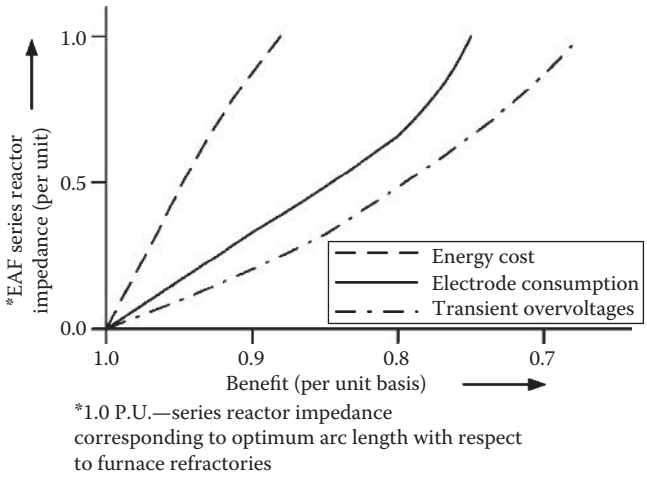

FIGURE 11.32 EAF series reactor benefits.

11.4 Some Important Application Considerations

11.4.1 Short Circuit: Basic Concepts

Figure 11.33 represents a radial system in which the sending end bus is connected to an infinite source. From inspection, the following equations may be established:

$$V_S = V_R + \Delta V \tag{11.5}$$

$$I = \frac{(V_R + \Delta V)}{(Z_S + Z_T + Z_L)} \tag{11.6}$$

www.EngineeringEbooksPdf.com

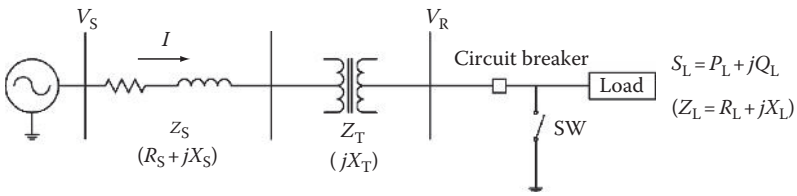

FIGURE 11.33 Radial system.

where

V_S is the sending end voltage, p.u.
V_R is the receiving end voltage, p.u.
ΔV is the bus voltage drop, p.u.
I is the bus current, p.u.
Z_S is the source impedance, p.u.
Z_T is the transformer impedance, p.u.
Z_L is the load impedance, p.u.

Under steady state, the load impedance* (Z_L) essentially controls the current I since both Z_S and Z_T are small. Also, typically $X_S \gg R_S$; $X_T \gg X_S$; and the load $P_L > Q_L$.

Therefore,

$$\Delta V = V_S - V_R \cong [PR_S + Q(X_S + X_T)] \tag{11.7}$$

where

P is the real power, p.u.
Q is the reactive power, p.u.
R_S is the source resistance, p.u.
X_S is the source reactance, p.u.
X_T is the transformer reactance, p.u.
ΔV is the voltage drop, p.u.

and ΔV, per unit, is small.

When a short circuit occurs (closing the switch SW), $V_R \to 0$ and $Z_L = 0$ (bolted fault) and Equation 11.6 can be rewritten as

$$I_{SC} = \frac{\Delta V}{[R_S + j(X_S + X_T)]} \tag{11.8}$$

$$\cong \frac{\Delta V}{(X_s + X_T)} < -90^\circ \tag{11.8a}$$

where, I_{SC} is the short circuit current, p.u.

Since $|X_s + X_T|$ is small, the short circuit current (I_{SC}) may become very large. The total transmitted power then equals the available power from the source (MVA_{SC}),

$$S = V_S \times I_{SC} \tag{11.9}$$

* The load may in fact be a rotating machine, in which case the back electromotive force (EMF) generated by the motor is the controlling factor in limiting the current. Nevertheless, this EMF may be related to an impedance, which is essentially reactive in nature.

www.EngineeringEbooksPdf.com

$$S = \frac{V_s \times \Delta V}{(X_s + X_T)} < -90^\circ \tag{11.9a}$$

where, S is the transmitted power, p.u.

Therefore, the system voltage is shared, as voltage drops, between the system impedance (transmission lines) and the transformer impedance:

$$V_S = \Delta V \cong Q_S(X_S + X_T) \tag{11.10}$$

where Q_S is the transmitted reactive power, p.u.

Since X_T is typically much larger than X_S, the voltage drop across the transformer almost equals the system voltage. Two major concerns arise from this scenario:

- The mechanical stresses in the transformer: the windings will experience a force proportional to the square of the current
- The ability of the circuit breaker to successfully interrupt the fault current

Therefore, it is imperative to limit the short circuit current so that it will not exceed the ratings of equipment exposed to it.

Basic formulas are as follows:

Three-Phase Fault

$$I_{3\Phi}[\text{kA}] = \frac{100[\text{MVA}]}{[\sqrt{3}V_{LL} \times Z_1]} \tag{11.11}$$

1Φ *to Ground Fault*

$$I_{SLG}[\text{kA}] = \frac{3 \times 100[\text{MVA}]}{[\sqrt{3}V_{LL} \times Z_T]} \tag{11.12}$$

$$Z_T = Z_1 + Z_2 + Z_0 + 3Z_N \tag{11.12a}$$

where

V_{LL} is the line-to-line base voltage, kV

Z_T is the total equivalent system impedance seen from the fault, p.u.

Z_1, Z_2, and Z_0 are the equivalent system positive, negative, and zero sequence impedance seen from the fault (in p.u. @ 100-MVA base)

Z_N is any impedance intentionally connected to ground in the path of the fault current, p.u.

11.4.2 Phase Reactors vs. Bus Tie Reactors

A method to evaluate the merits of using either phase reactors vs. bus tie reactors is indicated below (see also Figures 11.34 and 11.35).

I_{S1} and I_{S2} are the available fault contribution from the sources, I_L is the rated current of each feeder and n is the total number of feeders in the complete bus (assuming all feeders are identical).

Definitions: $I_b = \alpha I_{S2}$, the interrupting rating of the feeder CB's, $\alpha > 1$

$I_{S2} = K \times I_{S1}$ (I_{S2} assumed $< I_{S1}$, $K < 1$)

$I_{bt} = \beta \times I_L$, the rated current of the bus tie reactor

β = number of feeders on that section of the bus which has the highest number out of the total number of feeders for the complete bus.

www.EngineeringEbooksPdf.com

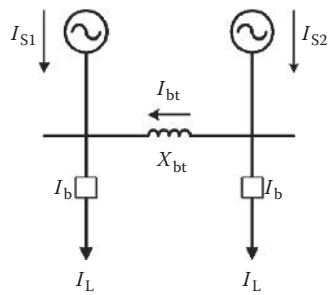

FIGURE 11.34 Bus tie reactor connection.

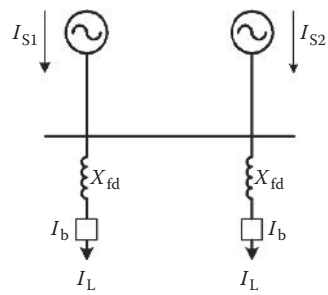

FIGURE 11.35 Phase reactor connection.

Therefore, the required reactor impedance in each configuration, their ratio, and the ratio of the rated power of the reactors are given by the following equations:

$$X_{bt} = \frac{V_{LL}}{\sqrt{3}I_{S2}}\left[\frac{K(1-\alpha)+1}{\alpha K-1}\right] \tag{11.13a}$$

$$X_{fd} = \frac{V_{LL}}{\sqrt{3}I_{S2}}\left[\frac{K(1-\alpha)+1}{\alpha(1+K)}\right] \tag{11.13b}$$

$$\frac{X_{bt}}{X_{fd}} = \frac{\alpha(1+K)}{\alpha K-1} \tag{11.13c}$$

$$\frac{\text{MVA}_{bt}}{\text{Total MVA}_{fd}} = \frac{\beta^2}{n}\left[\frac{[\alpha(1+K)]}{\alpha K-1}\right] \tag{11.13d}$$

From the above it is apparent that bus tie reactors are a good solution where a relatively small reduction in fault level is required on a number of downstream feeders.

Also bus tie reactors grow rapidly in size and cost when (1) the fault contributions on either side of the reactor are significantly different (i.e., as K moves away from 1.0) and (2) when the largest fault contribution (I_{S1}) approaches the breaker rating I_b.

Conversely, bus tie reactors decrease rapidly in size and cost when the reactor can be given a low continuous rating due to low normal power transfer across the tie.

11.4.3 Power Line Balance

Consider the radial system shown in Figure 11.36, in which the sending end bus is fed from an infinite power source.

www.EngineeringEbooksPdf.com

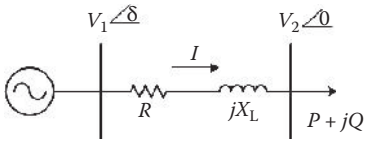

FIGURE 11.36 Simplified radial system.

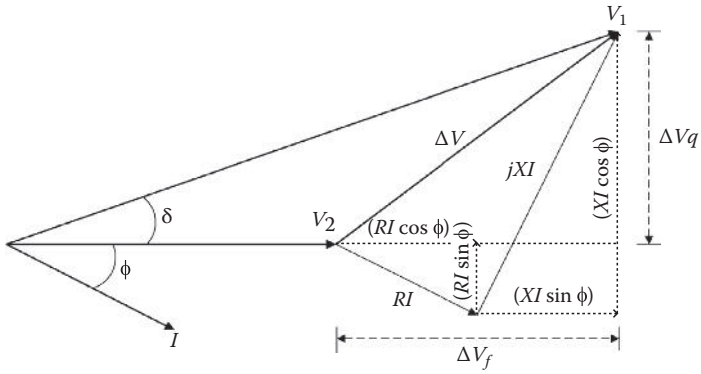

FIGURE 11.37 Power line balance phasor diagram.

By inspection from Figure 11.37 the following equations may be written:

$$\Delta V = V_1 - V_2 \tag{11.14}$$

$$\Delta V = Z \times I \tag{11.15}$$

$$\Delta V = [RI\cos\phi + XI\sin\phi] + j[XI\cos\phi - RI\sin\phi] \tag{11.16}$$

where

$\phi = \tan^{-1}(Q/P)$
V_1 is the sending end voltage, kV
V_2 is the receiving end voltage, kV
ΔV is the line voltage drop, kV
R is the line resistance, Ω
X is the line reactance, Ω
I is the line current, kA
P is the real power, kW
Q is the reactive power, kVA
δ is the transmission angle, degree
ϕ is the current phase angle, degree

Since $P = V_2 I\cos\phi$ and $Q = V_2 I\sin\phi$, then

$$\Delta V = \frac{[(PR + QX) + j(PX - QR)]}{V_2} \tag{11.17}$$

$$\Delta V = \Delta V_f + j\Delta V_q \tag{11.18}$$

where

ΔV_f is the in phase component of ΔV, kV
ΔV_q is the quadrature component of ΔV, kV

www.EngineeringEbooksPdf.com

The phasor diagram, shown in Figure 11.37, illustrates the meaning of Equations 11.17 and 11.18.

By inspection of Figure 11.37, it is clear that

$$\sin\delta = \frac{\Delta V_q}{V_1} \tag{11.19}$$

therefore,

$$P = [V_1 V_2 \sin\delta]/X + Q[R/X] \tag{11.20}$$

and

$$\delta = \tan^{-1}\left\{\frac{[PX - QR]}{[V_2 + (PR + QX)]}\right\} \tag{11.21}$$

In transmission systems, the X/R ratio is large and the grid usually operates with power factor close to unity. Thus, assuming $R = 0$ and $Q = 0$,

$$\Delta V = \frac{jP \times X}{V_2} \tag{11.22}$$

$$P = \frac{(V_1 \times V_2 \times \sin(\delta))}{X} \tag{11.23}$$

$$\delta = \tan^{-1}\left(\frac{P \times X}{V_2}\right) \tag{11.24}$$

Therefore, apart from the voltage magnitude, which must be kept within regulated limits, control of power flow can only be achieved by variation of the line reactance (X), the transmission angle (δ), or both.

11.4.4 Reactive Power Balance

Figure 11.38 shows a transmission system represented by its π equivalent.

By inspection, the following expressions can be derived:

$$V_1 = V_2 + \Delta V \tag{11.25}$$

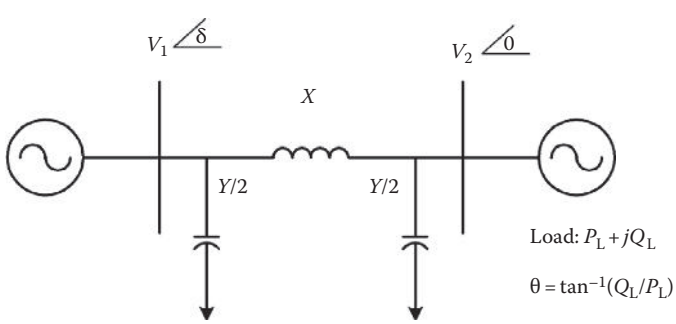

FIGURE 11.38 Transmission system π equivalent circuit.

www.EngineeringEbooksPdf.com

$$V_1 \cos\delta + jV_1 \sin\delta = V_2 + XI \sin\theta + jXI \cos\theta \tag{11.26}$$

$$XI \cos\theta = \frac{P_L X}{V_2} = V_1 \sin\delta \tag{11.27}$$

$$P_L = \frac{(V_1 V_2 \sin(\delta))}{X} \tag{11.28}$$

$$XI \sin\theta = \frac{Q_L X}{V_2} = V_1 \cos\delta - V_2 \tag{11.29}$$

$$Q_L = V_1 V_2 \cos\delta - V_2^2/X \tag{11.30}$$

$$S_i = \sqrt{(P_i^2 + Q_i^2)} \tag{11.31}$$

Therefore,

$$\text{Line Reactive Losses} = \left(\frac{S_i}{V_i}\right)^2 X \tag{11.32}$$

$$\text{Line Charging (at each end)} = \frac{V_i^2 \times Y}{2}, \quad i = 1, 2 \tag{11.33}$$

$$\text{Line Surge Impedance, } Z_S = \sqrt{X/Y} = \sqrt{L/C} \tag{11.34}$$

$$\text{Surge Impedance Loading, SIL} = \frac{V_{LL}^2}{Z_S} \tag{11.35}$$

$$\text{Power Balance} = \text{Total Line Charging} - \text{Line Reactive Losses}$$

11.5 Shunt Reactors and Switching Transients

Since the amount of the reactive compensation needed in a power system varies with the loading of the transmission line, shunt reactors are typically switched daily. Shunt reactors will thus experience a large number of switching transients [14]. Transient overvoltages mainly occur, while disconnecting the reactor from the circuit, due to the two following phenomena in the switching device:

- Current chopping
- Single or multiple restrikes

The behavior of these overvoltages depends on a number of factors such as

- Circuit connection (wye or delta)
- Method of neutral grounding (floating neutral, solidly grounded, or grounded through a reactor)
- Rated MVAR of the reactor
- Construction of reactor (air core, iron core, three legs, or five legs); which impacts the high frequency characteristics

www.EngineeringEbooksPdf.com

- Type of connection to the system (tertiary winding or direct connection)
- Type and ratings of circuit breaker
- Neighboring equipment characteristics

11.5.1 Current Chopping

When the contacts of a breaker part, current in the circuit will not be interrupted immediately. Current continues to flow through the arc established between the contacts right after the instant of contact parting. Normally the arc extinguishes when the AC current crosses zero. In some cases, however, due to arc instability caused by the circuit parameters and the breaker characteristics, the arc extinguishes abruptly and prematurely ahead of the natural zero crossing of the AC current. When this happens, the energy trapped in the magnetic field of the reactor is transferred to the electric field of the stray capacitances in the circuit, thus initiating a resonant response. The resonance frequency is typically a few kHz and its magnitude is directly proportional to the chopped current and the surge impedance of the circuit and it may exceed the dielectric withstand of the reactor. Figure 11.39 shows an equivalent circuit that can be used for simulating the chopping overvoltages for a star connected and solidly grounded reactor with negligible coupling between phases. The parameter k_a in Equation 11.36 provides a relative indication of the magnitude of the overvoltage for this type of reactor connection. Circuit damping effects are neglected.

$$k_a = \sqrt{1 + \frac{3 \cdot I_{ch}^2}{2\omega C_1 Q}} \qquad k_a = \frac{V_{reactor_chopping}}{V_{L-G}} \tag{11.36}$$

where

k_a is the per unit parameter that indicates the relative magnitude of the overvoltage due to current chopping

$V_{reactor_chopping}$ is the maximum peak of the overvoltage across the reactor terminals after current chopping, kV

V_{L-G} is the maximum peak line-to-ground system voltage, kV

I_{ch} is the magnitude of current chopped, A

C_1 is the total capacitance on the reactor side, μF

ω is the angular power frequency, rad/s

Q is the shunt reactor bank three-phase MVAR

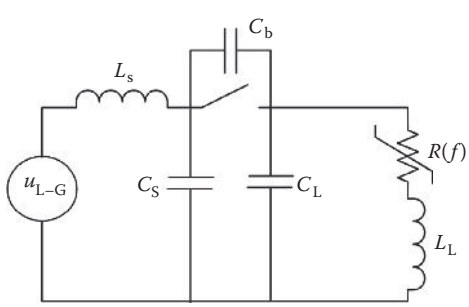

FIGURE 11.39 Single-phase equivalent circuit for a star connected and solidly grounded shunt reactor bank, where L_L is the reactor reactance (for gapped iron-core shunt reactor, manufacturer should be consulted to obtain the core saturation level at high transient frequencies and thus the resultant inductance; for air-core shunt reactors the inductance can always be considered a constant value equal to the 60 Hz rated value); C_L is the equivalent capacitance at the reactor side of the C_b; $R(f)$ is the reactor frequency dependent resistance; L_S is the system equivalent reactance; C_b is the equivalent capacitance across the breaker terminals; C_S is the system equivalent capacitance; and u_{L-G} = System line-to-ground voltage.

www.EngineeringEbooksPdf.com

For SF_6, bulk oil, and air blast circuit breakers I_{ch} is a function of the high frequency stray and grading capacitances in parallel with the circuit breaker terminals [16]. The following equation shows this relationship.

$$I_{ch} = \lambda \cdot \sqrt{C_{CB}} \tag{11.37}$$

where

λ is the chopping number [$AF^{-0.5}$], and it depends on the breaker construction and arc extinguishing media

C_{CB} is the equivalent capacitance across the breaker terminals for circuit represented in Figure 11.39

$$C_{CB} = C_b + \frac{C_S C_L}{C_S + C_L} \tag{11.38}$$

Since C_S in the case of tertiary winding connected shunt reactor is relatively smaller than C_S for a shunt reactor directly connected to the high voltage bus, tertiary connected reactors normally experience overvoltages of lower magnitude. Vacuum circuit breakers have a constant I_{ch}, which is weakly affected by the capacitance seen across its terminal. To obtain current chopping characteristics of a vacuum breaker the breaker manufacturer should be consulted. IEEE C37.015-1993 provides helpful information for evaluating overvoltages caused by CB current chopping [15]. Current chopping can be mitigated by employing an opening resistor with the circuit breaker. The shunt reactor can also be protected against current chopping overvoltages by a surge arrester installed across the reactor terminals.

11.5.2 Restrike

When interrupting a small inductive current just before the natural current zero in a circuit with a critical combination of source side and load side capacitances and inductances, the voltage across the breaker terminals may exceed its TRV capability and lead to breaker restrikes [16]. This process may repeat several times until the gap between the breaker contacts becomes sufficiently large so that its dielectric withstand exceeds the voltage across the breaker terminals. Each time the circuit breaker restrikes, a transient overvoltage is imposed on the reactor. This type of overvoltage has a very fast rate of rise of voltage that may distribute nonlinearly across the reactor winding turns. Current chopping may also increase the magnitude of transient overvoltages produced by restrike.

Multiple restrikes can excite a resonant oscillation in the reactor winding. This may lead to high frequency overvoltages between some coil winding turns. The following equation approximates the relation magnitude of the first restrike overvoltage for the reactor shown in Figure 11.37.

$$k = 1 + (k_a + 1)\left(\frac{C_S - C_L}{C_S + C_L}\right) k = \frac{V_{reactor_restrike}}{V_{L-G}} \tag{11.39}$$

When reactors are not solidly grounded, higher restrike voltages may occur. IEEE C37.015-1993 [15] provides detailed information for evaluating this type of overvoltages for reactors with different types of grounding.

Restrike can be mitigated by the use of a surge arrester across the circuit breaker terminals or by the use of a synchronous opening device with the circuit breaker. Overvoltage caused by restrike can be limited by adding a surge arrester across the reactor terminals. If multiple restrikes excite the natural frequency of the reactor winding, employment of an RC circuit can change the resonant frequency of the circuit and avert high frequency overvoltages between coil winding turns.

www.EngineeringEbooksPdf.com

11.6 Current Limiting Reactors and Switching Transients

11.6.1 Definitions

Transient recovery voltage (TRV) is the voltage that appears across the contacts of a circuit breaker pole upon interruption of a fault current. The first time that short circuit current passes through zero after circuit breaker contacts part, the arc extinguishes and the voltage across the breaker contacts rapidly increases. If the dielectric strength between the breaker contacts does not recover as fast as the recovery voltage across the contacts, the breaker will restrike and it will continue to conduct.

There are various sources of high rate of rise of transient recovery voltage, which may potentially cause the breaker to restrike, e.g., transformer impedance, short-line fault (SLF) or distant fault reflected waves. In cases where the fault current is limited by the inductance of a current limiting reactor, a high rate of rise of transient recovery voltage may also occur. It is recommended to conduct a TRV study prior to selection of a circuit breaker or prior to installation of a current limiting reactor.

11.6.2 Circuit Breakers TRV Capabilities

Rated circuit breaker TRV capabilities can be obtained from the manufacturers or from various standards such as ANSI C37.06 [8] or IEC 62271 [17]. Breaker TRV capabilities are normally defined by two sets of parameters. One indicates the maximum voltage peak that the breaker can withstand and the other one represents the rate of rise of the voltage; in other words, the minimum time to the voltage peak.

Parameters introduced in ANSI C37.06 define the TRV capability of a breaker by means of two types of envelopes. For breakers rated 123 kV and above, the envelope has an exponential-cosine shape if the symmetrical short circuit current is above 30% of the breaker short circuit capability (see Figure 11.40). At 30% and below, the envelope has a (1-cosine) shape. For breakers rated 72.5 kV and below, the envelope has a (1-cosine) shape over the entire fault current range. Breakers are also required to withstand line side TRV originating from a "kilometric fault" or SLF. This type of TRV normally reaches its peak during the delay time of the source side TRV (see Figure 11.40). When the actual fault current is less than the circuit breaker rated fault current, breakers can withstand higher TRV voltages in a short rise time vs. their rated value. As shown in Figure 11.40, when the actual fault current is 60% of rated value, the breaker can withstand a TRV of 7% higher voltage for a duration 50% shorter than rated time.

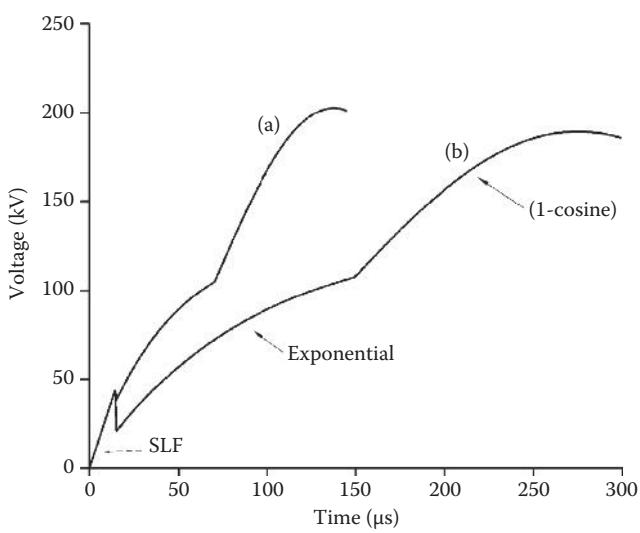

FIGURE 11.40 Typical TRV capability envelopes for 123 kV class circuit breaker at (a) 60% and (b) 100% of rated fault current.

www.EngineeringEbooksPdf.com

Therefore, when using reactors to reduce the short circuit level at a substation, it might be more beneficial from the TRV point of view, to install current limiting reactors at the upstream feeding substation where breakers are rated for higher short circuit level.

11.6.3 TRV Evaluation

Computer simulation or even manual calculation using the current-injection method can be employed to evaluate the TRV across the circuit breaker terminals. IEEE C37.011-1994 [18] also provides some guidance for evaluating the TRV. To conduct the study, electrical characteristics of all the equipment involved in the TRV circuit is required. Equipment characteristics can normally be obtained from the equipment nameplate. However, stray capacitances or inductances are not normally shown on the nameplates. To obtain this information, the equipment manufacturer should be consulted. When dealing with TRV associated with fault current limited by a current limiting reactor, normally the first pole to open experiences the highest peak of TRV during an ungrounded three-phase fault at terminal (for certain conditions during a two-phase-to-ground fault higher TRV can be experienced [19]). The shape of TRV when fault current is limited by a reactor is oscillatory (under-damped) and is very similar to the TRV generated when fault current is limited by a transformer impedance.

When modeling a reactor for TRV studies the following items shall be considered:

- All types of reactors have stray capacitances. These stray capacitances can be obtained from the manufacturers. Generally stray capacitance of a dry-type reactor is in the order of a few hundred pF and an oil filled reactor is in the order of a few nF, see Figure 11.41.
- Reactor losses at power frequency are very small and insignificant. However, as a result of skin effect and eddy losses at high frequencies (in the range of kHz), the reactor losses are significant (see Figure 11.41). This characteristic of the reactor can help to damp the transients and shall be reflected in the model by including a frequency dependent resistance in series with the reactance.

11.6.4 TRV Mitigation Methods

Should the system TRV exceed the breaker capability, one or a combination of the following mitigation methods can be employed:

- Installation of a capacitor across the reactor terminals.
- Installation of a capacitor to ground from the reactor terminal connected to the breaker. For bus tie reactors, capacitors shall be installed to ground at both reactor terminals.

From a TRV point of view, either of the previous mitigation methods is acceptable. However, from the economic point of view it is more cost effective to install the capacitor between the reactor terminals,

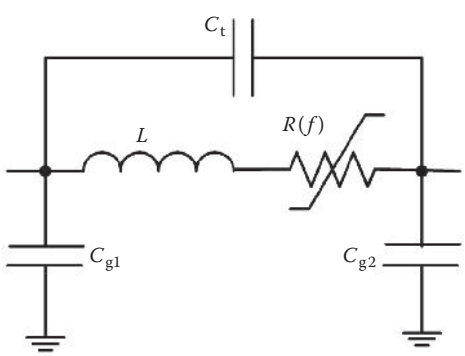

FIGURE 11.41 Reactor model for TRV studies where C_{g1} and C_{g2} are the stray capacitance of reactor terminals to ground. C_t, terminal to terminal stray capacitance; L, reactor inductance; $R(f)$, reactor frequency dependent resistance.

www.EngineeringEbooksPdf.com

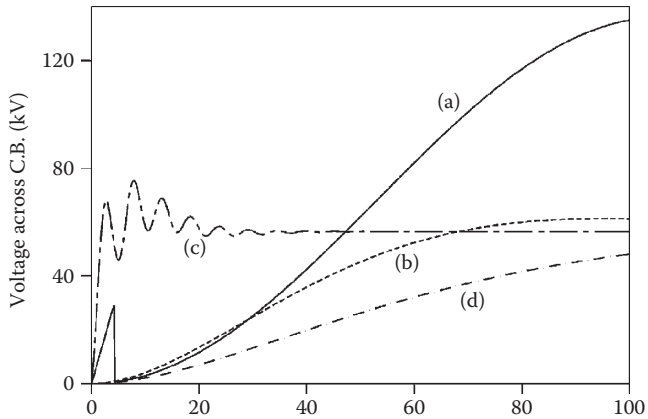

FIGURE 11.42 Results of a TRV study for a subtransmission substation: (a) Breaker TRV capability, (b) system TRV when no reactor installed, (c) system TRV when a current limiting reactor installed, and (d) system TRV with capacitor across reactor terminals.

since the steady-state voltage drop across the reactor is significantly lower than the line-to-ground voltage and as a result a lower voltage capacitor can be used.

Figure 11.42 shows the result of a TRV study for a subtransmission substation. Curve (b) in this figure shows the system TRV prior to installation of a current limiting reactor. It slightly exceeds the breaker capability depicted by curve (a). After installation of a current limiting reactor the system TRV (Figure 11.42, curve (c)), exceeds the breaker capability significantly. To reduce the rate of rise of TRV, a capacitor was installed across the reactor terminals. As is shown in curve (d) the system TRV has been modified to an acceptable level.

11.7 Reactor Loss Evaluation

Loss evaluation is often given a high profile by utilities in their tender analysis when purchasing reactors. The consideration of the cost of losses can be a significant factor in the design of reactors, so that the purchaser needs to ensure that loss evaluation, if applied, is made under clearly defined conditions according to clearly defined procedures. Reactor designs can readily be modified to provide the lowest loss evaluated total equipment cost (the sum of capital cost and cost of losses as calculated from the loss evaluation).

11.7.1 Reactor Losses

The losses in a reactor loaded with fundamental current and, if present, with harmonic current can be determined by

$$P = \sum_{n=1}^{N} \frac{I_n^2 X_n}{Q_n} \tag{11.40}$$

where

P is the reactor loss, kW
N is the harmonic number (n = 1.… fundamental current)
N is the maximum harmonic order
I_n is the current in the reactor at harmonic order n, A
X_n is the reactor reactance at harmonic order n, Ω
Q_n is the reactor Q-factor at harmonic order n

www.EngineeringEbooksPdf.com

Unlike transformers, reactors do not have no-load losses and in most cases nil or negligible auxiliary losses (oil-immersed reactors only; cooling fans, oil pumps, etc.). If a reactor is off-load, then the losses are zero; and if the reactor is energized, then it exhibits power loss consumption. Thus, reactor losses may be treated in the same way as transformer load losses.

The main aspects that need to be considered when assessing reactor losses are

1. Anticipated load profile (load factor)
2. Rated (operating) busbar voltage (for shunt and filter reactors)
3. Ambient temperature
4. Harmonics

Series reactors (current limiting and load balancing reactors) are load cycled and thus the loss will vary with current. Shunt reactors are constantly at full load when they are connected to the bus. Their losses will only depend on the operating voltage of the busbar and the cost of losses is a function of connection time (in-service time).

As the reactor losses vary with temperature, it is important to specify an appropriate reference temperature at which the losses shall be declared by the reactor manufacturer. A standard reference level is 75°C. In case of highly loss evaluated reactors, the temperature rise of the winding is usually low. For this condition, it is reasonable to specify a lower reference temperature. For example, if the average winding temperature rise of a reactor is 35°C and the average ambient is 20°C, then 55°C, instead of 75°C, will better represent a reference temperature for loss evaluation.

It should be noted that harmonic currents can be decisive in declaring the losses for filter reactors, but the losses at harmonic frequencies of reactors other than filter reactors are usually almost negligible in comparison to those at fundamental frequency. Also, harmonic losses (Q-factor) are not usually included in loss evaluations since filter quality factors at the tuning frequency are often dictated by other filter design considerations such as filter bandwidth, damping requirements, and required level of harmonic filtering.

11.7.2 Basic Concepts for Loss Evaluation

Each supply authority determines the cost of losses for its own particular operating conditions. Because these differ from authority to authority, the cost of capitalized losses will also vary. The cost of losses is generally the sum of two components:

1. The cost reflecting the generating capacity (installation cost): The cost required for installing the generating capacity to supply the peak losses in the supply system so that in turn it can supply the power losses in the reactors. The cost of capacity is generally assumed to be the lowest cost means of providing the peaking capacity, e.g., gas turbine peaking units, or alternatively it may be based on the average costs of new generating capacity.
2. The energy cost (kilowatt-hour cost) of reactor losses: The energy cost to reflect the actual cost of supplying the energy consumed by the reactor. Because energy is consumed through the entire life of the reactor, further factors need to be considered to determine a present value worth of the future losses. These include
   a. The load factor or in-service time (shunt reactors)
   b. The efficiency of supplying the energy consumed by the reactor
   c. The cost escalation rate for energy
   d. The discount rate for present valuing future costs
   e. The anticipated operating life of the reactor

   Typical loss evaluation figures (load power loss cost rates, LLCR), range from a few hundred dollars per kilowatt to a few thousands of dollars per kilowatt.

www.EngineeringEbooksPdf.com

Loss penalties for reactors with measured losses exceeding guaranteed values are often applied at the same rate as the evaluation. A method to calculate the LLCR is provided in IEEE Std. C57.120-1991 IEEE Loss Evaluation Guide for Power Transformers and Reactors [20].

11.7.3 Operational Benefits of Loss Evaluation

Where loss evaluations are significant and result in lower loss reactor designs, further operational advantages may ensue including

1. Lower reactor operating temperature and hence increased service life
2. Increased reactor overload capability
3. Less cooling required for indoor units

11.8 De-Q'ing

Various levels of electrical damping are required in a number of reactor applications including harmonic filters, shunt capacitor banks, and series capacitor banks. All are inductive or capacitive circuits and damping is usually governed by the resistive component of the reactor impedance. If this is insufficient, then other means of providing damping must be employed. The required level of damping in a harmonic filter depends on system parameters. In the case of harmonic filter, shunt capacitor bank, and series capacitor bank applications, the required level of damping is system design driven. Damping is usually required at a specific frequency. The Q-factor is a measure of the damping; the lower the Q the higher the damping. The Q-factor is the ratio of reactive power to active power in the reactor at a specific frequency. In cases requiring high damping, the natural Q-factor of the reactor is usually too high. However, there are methods available to reduce the Q of a reactor by increasing the stray losses through special design approaches, namely, increasing conductor eddy loss and mechanical clamping structure eddy loss. In the case of reactors for shunt capacitor banks and series capacitor bank applications this method is usually sufficient. In the case of reactors for harmonic filter applications other more stringent approaches may be necessary. One traditional method involves the use of resistors that, depending on their rating, can be mounted in the interior of the reactor or on the top of the reactor or separately mounted. Resistors are usually connected in parallel with the reactor. Figure 11.43 shows a tapped filter reactor, separately mounted resistor arrangement for an AC filter on an HVDC project.

Another more innovative and patented approach involves the use of de-Q'ing rings, which can reduce the Q-factor of the reactor by a factor of as much as 10. A filter reactor with de-Q'ing rings is illustrated in Figure 11.44. The de-Q'ing ring system comprises a single or several coaxially arranged closed rings that couple with the main field of the reactor. The induced currents in the closed rings dissipate energy in the rings, which lowers the Q-factor of the reactor.

Because of the large energy dissipated in the rings, they must be constructed to have a very large surface to volume ratio in order to dissipate the heat and are therefore usually constructed of thin tall sheets of stainless steel. Cooling is provided by thermal radiation and by natural convection of the surrounding air, which enters between the sheets at the bottom end of the de-Q'ing system and exits at its top end. The stainless steel material used for the rings may be operated up to about 300°C without altering the physical characteristics or parameters. Especially important is that the variation of resistance with temperature is negligible. The physical dimensions of the rings, their number, and location with respect to the winding are chosen to give the desired Q-factor at the appropriate frequency.

The Q characteristic of a reactor with de-Q'ing rings is very similar to that of a reactor shunted by a resistor. The basic theory for both approaches is described in the following paragraphs.

www.EngineeringEbooksPdf.com

FIGURE 11.43 AC filter for an HVDC project; capacitors, tapped filter reactors, and separately mounted resistors.

FIGURE 11.44 Tapped filter reactor with de-Q'ing rings.

www.EngineeringEbooksPdf.com

11.8.1 Paralleled Reactor and Resistor

Figure 11.45a shows the circuit diagram corresponding to a resistor in parallel with a fully modeled reactor, i.e., one having series resistance. For simplicity it is assumed that the series resistance is not frequency dependent. For this nonideal case, the expression for Q is given by the following equation:

$$Q = \frac{\omega L_1 R_p}{R_s R_p + R_s^2 + \omega^2 L_1^2} \tag{11.41}$$

where

L_1 is the self inductance of reactor, H
R_p is the resistance of parallel resistor, Ω
R_s is the series resistance of reactor, Ω

The Q vs. frequency characteristic is shown in Figure 11.45b. For very low frequencies the system behaves like a series R–L circuit, i.e., Q is approximately equal to $\omega L_1/R_s$ and Q equals zero when ω equals zero. For very high frequencies the system behaves like a paralleled R–L circuit, Q is approximately equal to $R_p/\omega L_1$ and Q approaches zero as ω approaches infinity. It can be shown that Q reaches a maximum at a frequency given by the following equation:

$$\omega = \frac{1}{L_1}\sqrt{R_s R_p + R_s^2} \tag{11.42}$$

and the maximum value of the Q is given by the following equation:

$$Q_{max} = \frac{R_p}{2\sqrt{R_s R_p + R_S^2}} \tag{11.43}$$

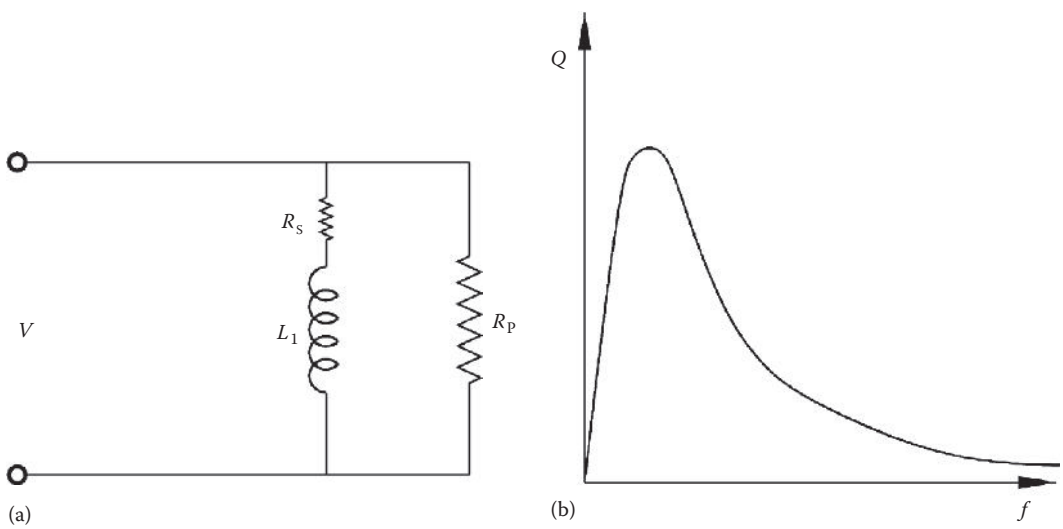

FIGURE 11.45 (a) Circuit diagram corresponding to a resistor in parallel with a fully modeled reactor, i.e., one having series resistance; (b) Q vs. frequency characteristic of a reactor with parallel resistor.

www.EngineeringEbooksPdf.com

11.8.2 Reactor with a De-Q'ing Ring

The circuit diagram is shown in Figure 11.46a. For simplicity, it will be assumed that the series resistance is not a function of frequency. The expression for Q as a function of frequency is given by the following equation:

$$Q = \frac{\omega^2(L_1L_2^2 - M^2L_2) + \omega R_2^2 L_2}{\omega^2(R_2M^2 + R_1L_2^2 + R_1R_2^2)} \tag{11.44}$$

where

L_1 is the self inductance of reactor, H
L_2 is the self inductance of de-Q'ing ring system, H
M is the mutual inductance between reactor and de-Q'ing ring system, H
R_1 is the series resistance of reactor, Ω
R_2 is the resistance of de-Q'ing ring system, Ω

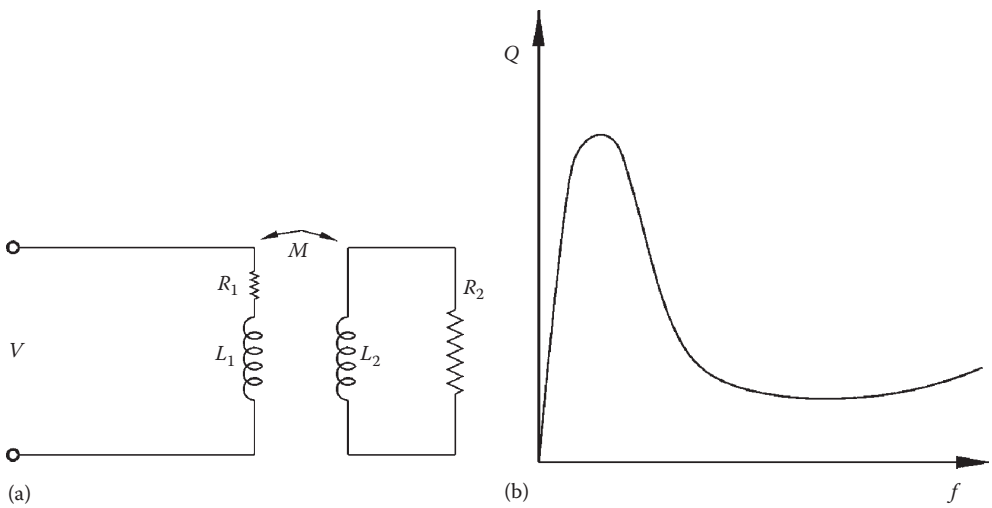

FIGURE 11.46 (a) Circuit diagram for a reactor with a de-Q'ing ring; (b) Typical graph of Q vs. frequency for a reactor plus de-Q'ing rings.

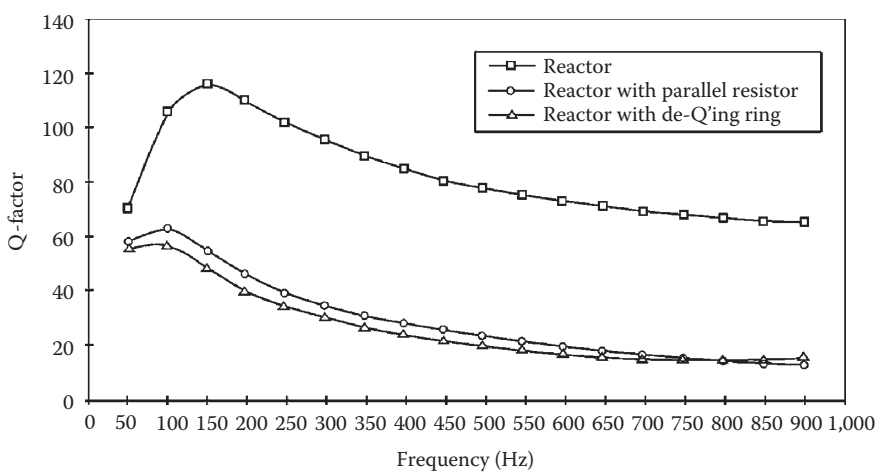

FIGURE 11.47 Graph of Q vs. frequency for natural Q-filter reactor, a filter reactor plus parallel resistor, and a filter reactor with a de-Q'ing ring system.

www.EngineeringEbooksPdf.com

The shape of the Q vs. frequency characteristic depends upon the value of the coupling factor and also on the values of the series resistance and load resistance. Figure 11.46b is a typical characteristic for a practical reactor. It is seen that the Q curve has both a maximum and a minimum. In general, the maximum depends mostly on the series resistance whereas the minimum depends primarily on the coupling factor and the ring resistance.

11.8.3 Summary

Figure 11.47 contains a graph of Q vs. frequency for a natural Q-filter reactor, a filter reactor plus parallel resistor, and a filter reactor with a de-Q'ing ring system. Note the virtually identical Q vs. f characteristic for the parallel resistor vs. de-Q'ing ring option.

11.9 Sound Level and Mitigation

11.9.1 General

The primary source of sound from dry-type and oil-immersed reactors is related to electromagnetic forces generated at fundamental power frequency current and where applicable, harmonic frequency. The sources of sound in dry-type air-core reactors are the "breathing mode" (expansion or relaxation) vibrations of the windings resulting from the interaction of the winding currents, and the "global" magnetic field of the reactor. In the case of oil-immersed reactors, the sound sources are more complex; and depending on design approach, they include combinations of and contributions from winding, core (including air gap), magnetic shields, and nonmagnetic shielding and ancillary equipment such as cooling fans. The basic mechanism involves the magnetic field at the iron–air interfaces and the resultant "pulling" forces on the magnetic core material.

11.9.2 Oil-Immersed Reactors

Oil-immersed shunt reactors utilize two basic design approaches; air-core magnetically shielded and distributed air-gap iron-core. Unlike power transformers, where magnetostriction in the core material is the primary source of noise in an unloaded transformer, the major source of noise in a shunt reactor is vibrational forces resulting from magnetic "pull" effects at iron–air interfaces, primarily at the air gaps. On a secondary order, leakage flux penetrates structural components of the reactor and the resultant electromagnetic forces generate vibrational movement and audible noise at twice the power frequency. In the case of oil-immersed magnetically shielded air-core designs, the forces primarily act on the end shield producing bending forces in the laminations. The resulting vibrations depend on the geometry of the laminated iron-core shields and the mechanical clamping structure. Additional forces or vibrations result from leakage flux interaction with the tank walls and any ancillary laminated magnetic core material used to shield the tank walls. Distributed air-gap iron-core reactors produce a major portion of their noise as a result of the large magnetic attraction forces in the gaps and also, due to similar forces, at the end yoke–core leg interfaces. The avoidance of mechanical resonance is key to minimizing sound levels. It should be noted that gapped iron-core technology was used in the past for the design of high voltage filter reactors for HVDC application and the issues described above were acerbated by the presence of harmonic currents.

Another design approach that can be used for oil-immersed reactors is essentially an air-core reactor design that is placed in a conducting tank (usually aluminum) or in a steel tank with continuous aluminum shielding; in other words, an oil-immersed air-core reactor with nonmagnetic conductive shielding. In this case, noise sources are the windings and the shielding.

Mitigation of sound begins at the design stage by ensuring that critical mechanical resonances are avoided in clamping structure, tank walls, etc., and where necessary by utilizing mechanical damping techniques such as vibration isolation mounting of core material. Site mitigation measures include the

www.EngineeringEbooksPdf.com

use of large, tank supported, external screens with thick acoustic absorbent material, walled compounds, and barriers made of, for instance, acoustic (resonator) masonry blocks and full acoustic enclosures.

11.9.3 Air-Core Reactors

For air-core reactors, the primary source of acoustic noise is the radial vibration of the winding due to the interaction of the current flowing through the winding and the "global" magnetic field. Air-core reactors carrying only power frequency current such as series reactors, shunt reactors, etc. produce noise at twice the fundamental power frequency current. In the case of filter reactors and TCRs, the noise generated by harmonic currents contributes more to the total sound level than the noise resulting from the fundamental power frequency current because of the A-frequency weighing of the sound. Because there are multiple harmonic currents present in reactors employed on HVDC systems, the design for low operating sound level is a challenge; avoidance of mechanical resonances at the numerous forcing functions requires excellent design linked modeling tools.

The winding may be regarded in simplified modeling as a cylinder radiating sound from the surface due to radial pulsation. A reactor winding has several mechanical self-resonance frequencies. However, predominately one mode shape, the first tension mode or the so-called "breathing" mode, will be excited, since this mode shape coincides with the distribution of the electromagnetic forces. The "breathing" mode mechanical frequency is inversely proportional to the winding diameter. For example, a cylindrical aluminum winding with a diameter of 1400 mm has a natural "breathing" mode mechanical frequency of approximately 1000 Hz. To avoid dynamic resonance amplification, the reactor should be designed so that the self resonance frequency is not near the forcing frequency.

The exciting electromagnetic forces are proportional to the square of the current and oscillate with twice the frequency of the current. If, however, the reactor is simultaneously loaded by several currents of different frequencies, in addition to vibration modes at double the electrical frequencies, additional vibration frequencies occur as shown below:

- Loading with two AC currents with frequencies f_1 and f_2 will generate acoustic sound with frequencies

$$2f_1, \quad 2f_2, \quad f_1 + f_2, \quad f_1 - f_2$$

- Loading with DC current and one AC current with a frequency f_1 will generate acoustic frequencies

$$f_1, \quad 2f_1$$

The acoustic frequency spectrum will substantially increase if the reactor's current spectrum includes multiple harmonics; "n" harmonic currents can generate at most n^2 forcing frequencies, and the practical number is usually less because some overlapping occurs.

With the increasing concern for the environment, there are now often stringent sound level requirements for many sites. Extensive sound modeling software and mitigation techniques have been developed for dry-type air-core reactors. The predictive software allows the design of air-core reactors with mechanical resonances distant from any major exciting frequency and the optimum use of component materials to reduce sound level. Where extremely low sound levels are required, mitigating methods such as acoustic foam lined sound shields are also available and have been used with great success.

Figure 11.48 shows an installation of harmonic filter reactors for an HVDC project with a sound shield enclosure. Sound shield enclosures can typically reduce the sound pressure level by up to 10–12 dB. Very low sound levels were required as people live in houses on the hillsides overlooking the HVDC site.

Figure 11.49 shows three curves of the sound pressure level (SPL) plotted as a function of the frequency of the filter reactor current for one of the filter reactors shown in Figure 11.48. One curve shows the sound characteristic of the original or natural design. The second curve shows the sound characteristic

www.EngineeringEbooksPdf.com

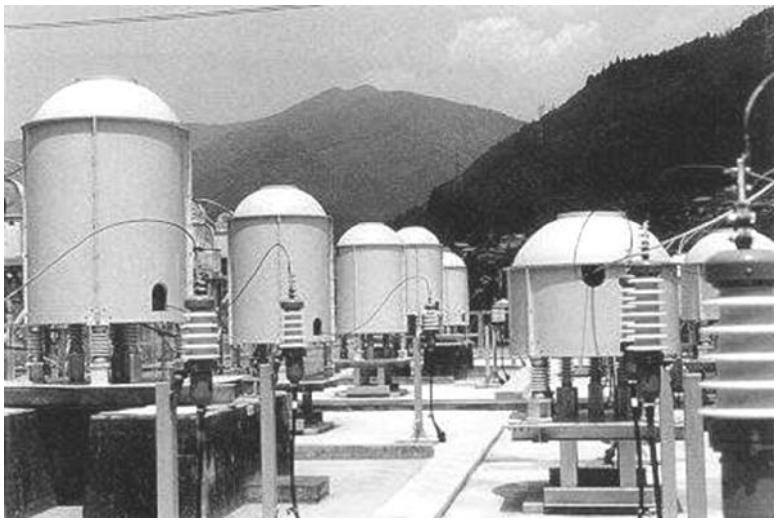

FIGURE 11.48 Installation of harmonic filter reactors for an HVDC project with a sound-shield enclosure.

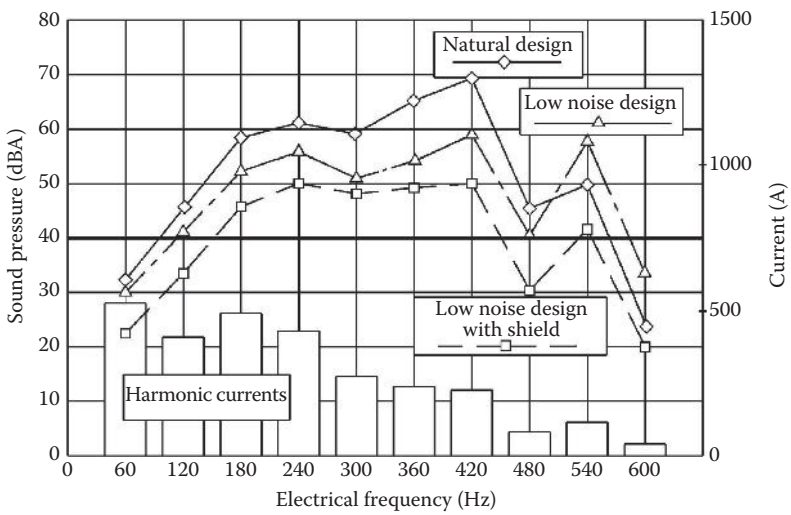

FIGURE 11.49 Design comparison of sound-pressure levels; natural design vs. reduced noise design vs. shielded reduced noise design.

of the reactor redesigned to avoid mechanical resonances and with increased damping material, thus resulting in a lower amplitude of the sound pressure level at the dominating frequencies of the forcing function. The third curve shows the effect of sound reduction due to a sound shield enclosure.

11.10 Line Traps and Power Line Carrier Communication/ Data/Protective Relaying Systems

Line traps are a major component of power line carrier communication/data transmission/protective relaying systems utilized by utilities. The power transmission lines provide the telecommunications medium. The power line carrier system consists of line traps, coupling capacitors (CC) or coupling capacitor voltage transformer (CCVT), line tuners, line matching units (LMU), and radio transmitters and receivers. The main coil component of a line trap is essentially a dry-type air-core reactor. The other

www.EngineeringEbooksPdf.com

FIGURE 11.50 Line traps mounted on top of CCVTs.

components of the line trap are the tuning device and the protective device, usually a distribution class metal oxide surge arrester. Figure 11.50 shows a fully encapsulated line trap mounted on a CCVT.

Power line carrier systems (depicted in Figure 11.50) are employed by utilities due to the high reliability of the transmission path or medium (power transmission line), utility ownership of the transmission "right of way" (and hence communication pathway), and low terminal equipment cost [21]. Figure 11.51 illustrates a typical PLC system. The line trap is a high frequency blocking filter that prevents the power line carrier radio frequency signal from entering the substation; conversely they provide a low impedance path for the power frequency line current. The high voltage coupling capacitor and line tuner unit provide a low impedance path for injection of the high frequency carrier signal and present a high impedance at power frequency. The radio terminal located at either end of the designated power

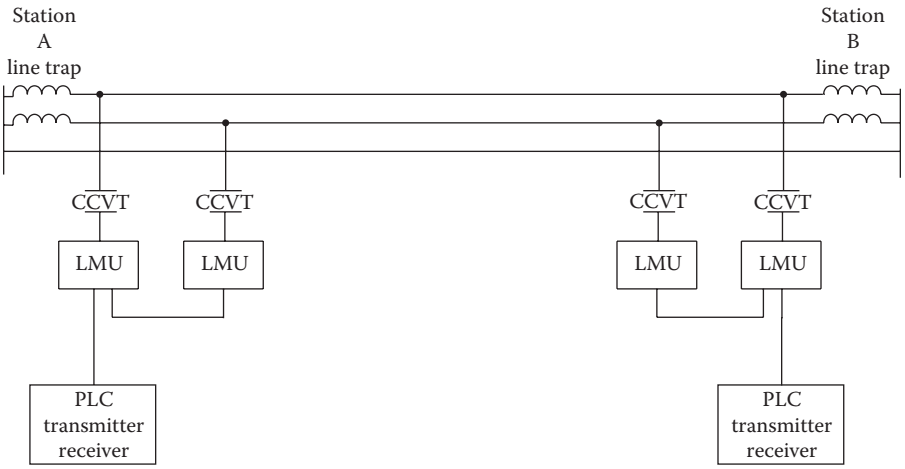

FIGURE 11.51 Block diagram of typical PLC system; interphase coupling.

www.EngineeringEbooksPdf.com

line link can be single function (frequency shift keyed carrier, "on–off" carrier), multichannel voice and data, or combinations of the preceding. Technology may be analog or digital, and techniques such as multiplexing are utilized to ensure the number of independent channels for protection signals, data, and voice. The most modern power line carrier terminals are computer technology based and include data processing, functionality, operational verification, as well as radio transmitter and receiver.

There are various methods of coupling power line carrier terminal equipment to the power transmission lines.

1. The simplest method is to utilize single-phase-to-ground coupling; usually the center phase.
2. A second method, which provides signal path redundancy, is interphase or inter-circuit coupling. In this case the power line carrier is coupled between two conductors of the transmission line or between one conductor of one line and one conductor of the second line. In this case two line traps, two coupling capacitors, and commensurate tuning equipment are required at each end of the transmission line. The advantage of this approach is that if one line conductor fails or is momentarily unavailable (due to a fault condition) the power line carrier system, and associated protection and relaying function will still operate (with possibly degraded performance). This is illustrated in Figure 11.51.
3. A third coupling methodology that is employed is a three-phase coupling. In this system the power line carrier is coupled to all three phases of the power line. This type of coupling results in much lower signal attenuation, and it is typically used on very long power lines. In addition, path redundancy is provided with three phases in use as transmission media.

As shown in Figure 11.51, the line trap is connected in series with the power line, between the point of connection of the coupling capacitor and the substation. Basically the line trap consists of a main coil designed to carry the rated continuous power frequency current and the rated short-time or short circuit current of the line. The other major components of the line trap are the protective device and tuning device. Figure 11.52 illustrates the main components of a line trap. The protective device (normally a distribution type metal oxide lightning arrester) is connected across the main coil and tuning device. Its main function is to protect the line trap components from being damaged by transient overvoltages normally associated with power lines. The tuning device can be composed of a combination of capacitors, inductors, and resistors connected across the main coil. Depending on the type of tuning arrangements,

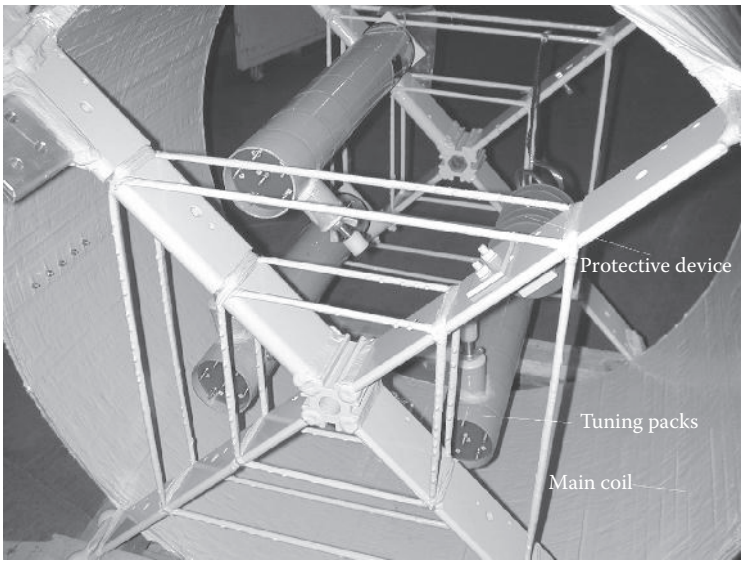

FIGURE 11.52 Internal view of line trap showing tuning device and protective device.

www.EngineeringEbooksPdf.com

all of these components may not be present in any given application. The main purpose of the tuning device is to improve the blocking efficiency of the main coil over a specified band of carrier frequencies. In addition to tuned line traps, specially constructed line traps without tuning devices are also available.

In summary, the main function of the line trap is to present high impedance at the carrier frequencies band while introducing negligible impedance at the power frequency. This main function must be maintained independent of the impedance connected on the station side of the line trap to prevent the carrier signals from (1) being dissipated in the station equipment, (2) being grounded in the event of a fault outside the carrier transmission path, or (3) being attenuated by a tap line or a branch of the main transmission path. In effect, the purpose of a line trap is to ensure that the carrier transmission path remains isolated, at carrier frequencies, from the rest of the system [22].

Line traps are available with a variety of performance characteristics that can allow the selection of the type most suitable for present and future system requirements. Line traps may be tuned or specially constructed to operate without tuning devices. The tuned type of line trap is essentially a parallel L/C network, and with variations in the tuning circuit, the choice of single frequency, double frequency, or wide-band tuning can be provided. In Figure 11.53, the equivalent circuits for the various blocking modes are illustrated along with the blocking characteristics. Tuning packs are normally designed to operate in a specific band of the carrier frequency spectrum. These bands are available from manufacturers in standard ranges or in custom-designed ranges to meet specific requirements.

The main coil of a line trap is basically a dry-type air-core reactor. Main coils may be open style or fully encapsulated. Open style designs are typically available in standard inductance and current ratings. Encapsulated designs are usually custom engineered and are available in a wide range of power frequency inductance and current ratings. The net result is that a wider range of high frequency blocking characteristics is possible.

Most designs can be accomplished by utilizing a 0.265 mH main coil, but any value can be used up to approximately 5 mH for practical reasons. The continuous current ratings are in the range of 100–6000 A. The international standards that cover line traps are ANSI C93.3-1995 [23] and IEC 60353-1989 [24].

11.10.1 Coupling Equipment and Hybrids

The high frequency signal is coupled into the transmission line by utilizing single frequency, double frequency, high pass, or band-pass frequency filters inside the line tuner that series resonate with the capacitance in a coupling capacitor (CC) or CCVT. The CCVT also has a voltage output to monitor phase voltage. The line tuner is usually located at the base of the CC or CCVT in the substation.

There is also a class of coupling equipment called hybrids. Hybrids are located alongside the receiver–transmitter equipment. They are used to combine or split multiple transmitter frequencies while maintaining isolation between transmitters and reducing intermodulation distortion. The types are

1. Balanced (resistive)
2. Unbalanced (skewed–resistive)
3. Reactance
4. L/C

11.10.2 Receiver–Transmitter Equipment

The state of the art receiver–transmitter equipment available today employs microprocessor controlled, programmable equipment that can be programmed to be either on–off or FSK carrier in one device. These devices also have built-in diagnostic and automatic transmitter and receiver sensitivity configuration functions. They also have Ethernet connections that allow them to be integrated into substation automation systems.

This equipment can provide 1–100 W signal output between 30 and 500 kHz in either 2-wire or 4-wire configuration.

www.EngineeringEbooksPdf.com

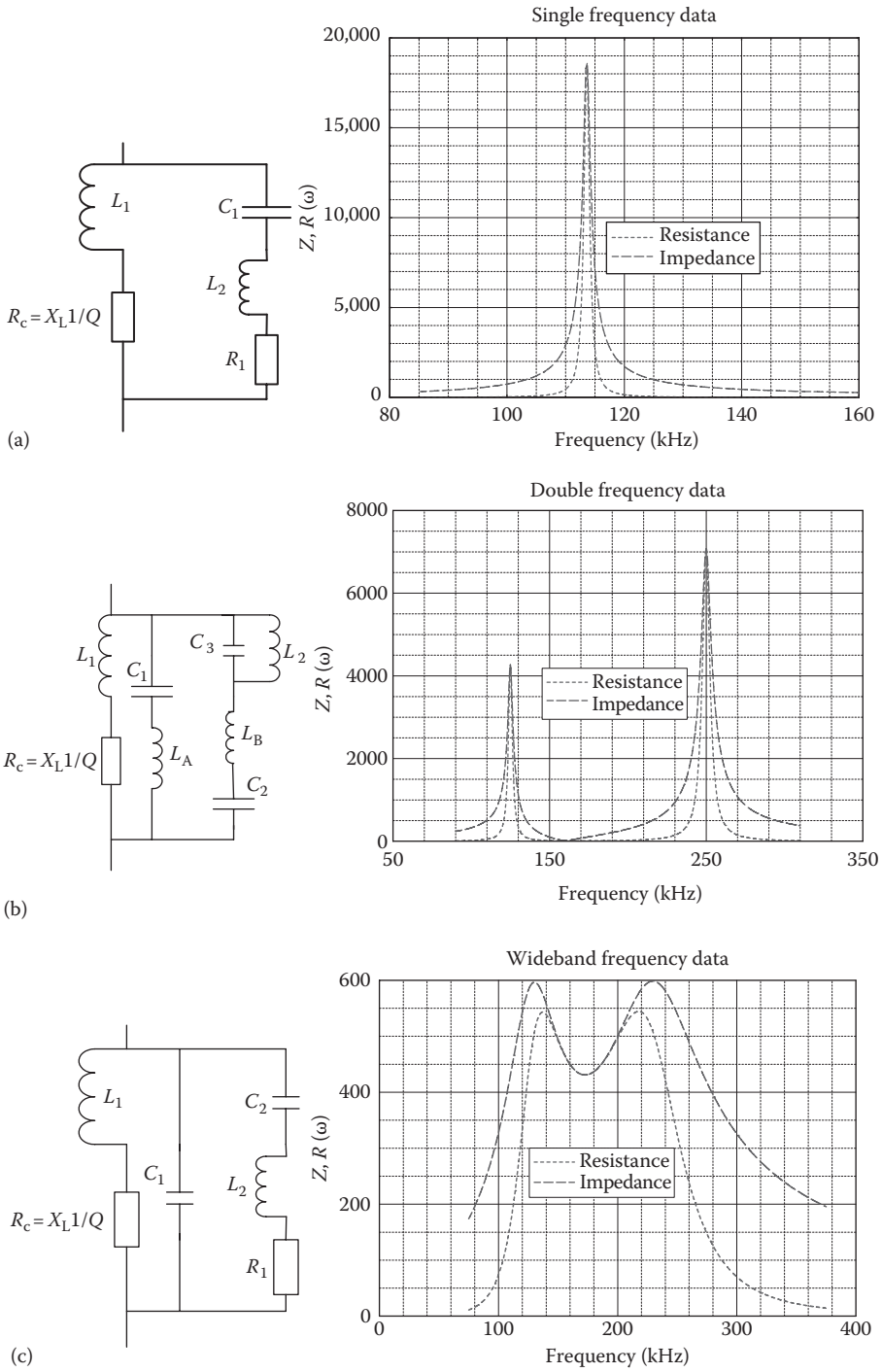

FIGURE 11.53 (a) Single frequency schematic and impedance response. (b) Double frequency schematic and impedance response. (c) Wideband frequency schematic and impedance response.

www.EngineeringEbooksPdf.com

11.11 Installation Considerations for Dry-Type Air-Core Reactors

11.11.1 Introduction

Installation considerations for oil-immersed reactors are generally the same as those for oil-immersed transformers. Therefore, the appropriate section of *Electric Power Transformer Engineering* can be referenced regarding issues and guidance related to the installation of oil-immersed reactors.

Installation considerations for dry-type iron-core reactors are similar to those for dry-type transformers. Hence, the appropriate section of *Electric Power Transformer Engineering* can be used for guidance concerning issues related to the installation of dry-type iron-core reactors.

In the case of dry-type air-core reactors, however, there are several unique and specific installation considerations. Therefore, this section focuses only on dry-type air-core reactor installation considerations.*

11.11.2 Notes on Safety

11.11.2.1 Electrical Safety

The dry-type air-core reactor winding and all associated elements, such as terminals, winding end electrodes, mounting fittings, are *live* when the reactor is in service. It is the responsibility of the contractor, customer, or user to safeguard persons in accordance with the applicable electrical safety code and regulations during the installation, operation, and maintenance of the reactors.

11.11.2.2 Magnetic Field

The magnetic field of a dry-type air-core reactor loaded with current is not constrained and will occupy the space around the reactor. Although the magnetic field decreases with increasing distance from the reactor, the presence of this field must be taken into consideration in the design of the installation. Information concerning the magnetic field strength around the reactor can often be provided by the reactor manufacturer.

11.11.3 Transport and Receiving Inspection

11.11.3.1 Transport

All transport to and from the installation site should be exclusively carried out with the packing still in place and using suitable lifting and transport equipment. During transport, the units must be adequately fixed onto the transport equipment and in compliance with government regulations. Impact loading during handling and any jerking during hoisting and lowering is to be avoided.

When lifting the units, all lifting lugs expressly marked for this purpose must be utilized and the load distributed equally; approved multilifting point slings should be utilized.

11.11.3.2 Inspection of the Equipment upon Arrival

When the reactor consignment arrives, the condition of the packing should be examined visually. If the packing is damaged, immediately inform the manufacturer via fax, email, or telephone about the exact extent of the damage. In such cases, the removal of the packing should only be performed in the presence of a representative of the transport insurance company, in order to determine the extent of possible damage to the reactors and to determine the liability. The manufacturer should be supplied

* The installation considerations presented are only provided for background information and general guidance and are not intended to replace installation information provided by the reactor manufacturer. Specific details are typically provided by the equipment manufacturer. The manufacturer's installation guidelines *only* should strictly be followed for the installation of dry-type air-core reactors as details are often equipment design specific.

www.EngineeringEbooksPdf.com

with a complete description of the damage to the reactors, in order that instructions can be provided regarding appropriate actions.

11.11.3.3 Unpacking

11.11.3.3.1 Crates or Cases

If possible, the unpacking should be performed in close vicinity to the place of assembly, on a firm and level base. Where applicable, the top of the crate or case should be cleaned before uncrating to avoid any contaminants falling into the reactor when the crate or case roof is removed. Remove all items from the case or crate and check them against the packing list for completeness.

11.11.3.4 Visual Inspection of the Equipment after Unpacking

After unpacking, a visual inspection of the units for possible damage should be made. Check all parts of the reactor for signs of deformation or damage. If damage is detected, do not install the reactor and contact the manufacturer for further information. Check for coating damage on the surface of unit. If damage to the surface below the coating is apparent, immediately contact the manufacturer for guidance. If the coating (paint) is only scuffed, installation may proceed. It is important that only manufacturer approved paint and recoating procedures be used to recoat the damaged area.

11.11.4 Installation

11.11.4.1 Assembly of the Reactor

1. Knocks or blows to reactor surfaces should be avoided to prevent possible damage to the reactor components.
2. If it is necessary for site personnel to go on top of the reactor, care must be taken to ensure footwear is clean.
3. When work is to be performed above or alongside of the reactor, any loose items should be removed from pockets to avoid dropping items into reactor cooling ducts, which could lead to premature reactor failure.
4. If an item is dropped, it is important to ensure that it is recovered and removed before energizing the reactor.
5. Falling items may also pose a safety hazard to those working below and may damage support insulator sheds.
6. If electrical connections are not made at the time of reactor erection, both reactor terminals should be grounded until system connections are made. This will eliminate the possibility of the accumulation of stray or induced charge from surrounding lines or equipment on the reactor winding.
7. It is important that only the hardware that is provided with the reactors is used for reactor assembly. In most cases hardware is austenitic stainless steel to avoid overheating due to eddy current induction effect.
8. For general information concerning erection of equipment, reference can be made to the local uniform building code (UBC).
9. The reactor manufacturer may be consulted for details regarding reactor forces resulting in overturning moments. This information is required for foundation design, including anchorage.

11.11.4.2 Electrical Connection, Grounding

As far as possible, the connecting leads are to be orientated in a radial direction and perpendicular to the coil vertical axis to minimize the electromagnetic force and the induced heating effect on the connectors by the magnetic field of the reactor.

www.EngineeringEbooksPdf.com

Connection cables should be provided with sufficient sag, and connecting bars should be equipped with suitable expansion elements, so as to provide adequate mechanical decoupling of the reactor terminals from the system.

Large ampacity connection cables can exert high static loads on the terminals. Also, long runs of cable may be subjected to large electrodynamic forces during short circuit conditions. Therefore, the connecting cables should be supported in the vicinity of the coil to minimize the forces and moments on the terminals.

Attention should be paid when using bundled cables so as to avoid torsional loads on terminals. Care should be taken to minimize any prestressing of reactor terminals. Terminal loading must be kept as far below maximum loads (provided by the manufacturer) as possible.

Before the electrical connections are made to the reactor terminals, the contact area of the terminals must be prepared. Application of a suitable electrical contact compound is recommended.

The bolts for electrical connection to the reactor terminals must meet the requirements given in the applied standards. For large dry-type air-core reactors, the use of nonmagnetic (austenitic) stainless steel bolts is recommended. To maintain the required contact pressure, bolted connections should be equipped with spring-type lock washers preferably made out of mechanically plated (to avoid hydrogen embrittlement) austenitic stainless spring steel.

The reactor winding and all elements, which are integrated with the winding, such as terminals, winding end electrodes, mounting fittings, etc., are live when the reactor is in service. Therefore, it is important to keep all grounded cable sheaths or other components well away from the reactor. Relevant clearances for phase-to-ground voltages must be met between all parts of each reactor and any grounded component.

The support structure of reactors (e.g., foundation brackets) should be grounded in a manner that avoids the creation of any electrical closed loops. The following pre-energization checklist is included as a guide.

11.11.4.3 Pre-Energization Checklist

Inspection Items: Operational Considerations Vibration

1.	Check the reactor and its components for damage during transportation/installation.	Π
2.	Verify that all magnetic clearances recommended by the reactor manufacturer have been considered.	Π
3.	Verify that electrical clearances from all parts of the reactor to surrounding grounded cable sheaths, structures, other equipment, etc. have been met.	Π
4.	Check the tightening torque of all bolted connections that have been made at site in the course of assembly, erection, and electrical connection.	Π
5.	Check the electrical leads to the reactor for proper alignment and sufficient sag to avoid introduction of undue static loads on the terminals.	Π
6.	Check the ground connections for possible closed loops.	Π
7.	Check the cooling ducts for foreign objects, in particular for bolts, nuts, washers, and wires, and remove them prior to energization.	Π
8.	Check the surface of the reactors and insulators for contamination. If applicable, clean reactors and insulators prior to energization.	Π
9.	Check the reactor winding for damage to the surface finish and repair damage, (after consultation with the manufacturer) if necessary.	Π
10.	Remove all components that do not pertain to the operation of the device, such as tools, bolts and other metal parts, ladders, tarpaulins, etc., prior to energization.	Π

11.11.4.4 Operational Considerations

11.11.4.4.1 Vibration

The magnetic field generated by the reactor, when crossing the current carrying winding of the reactor, produces electromagnetic forces. Further, electromagnetic forces act on the electrical leads to the reactor and on the terminals and winding end electrodes, if loaded with current. All of these forces are proportional to the square of the current. In the case of a single frequency AC current, the forces

www.EngineeringEbooksPdf.com

oscillate with twice the electrical frequency. The oscillatory forces on the winding cause the reactor to vibrate in the axial and in the radial direction. The winding vibrations are further transmitted to reactor components mechanically linked with the winding (winding end electrodes, support insulators, support columns, etc.). The extent to which vibrations are initiated depends on the reactor's power rating.

The vibrations may cause loosening of bolts and adjacent elements of the reactor and of its support structure if bolts are not properly tightened. Vibration of the windings and other large surfaces generates acoustic noise that is radiated by the reactor. This noise is tonal in nature and is subject to change with the reactor's load current. However, noticeable variations from the typical noise pattern (e.g., rattling sound) may be an indication of loose parts.

11.11.4.4.2 External Magnetic Field

The magnetic field generated by the energized reactor induces eddy currents in neighboring metallic parts, in the steel rebar of the concrete foundation, or in the grounding system. Depending on the size and shape of these elements certain thermal and electrodynamic effects may occur.

Signal wiring for system control, protection, voice or data communication, and any electronic apparatus should be properly shielded or moved away from the reactor area. The reactor manufacturer can provide detailed analysis and consequent recommendations.

11.11.4.4.3 Magnetic Field Background and Examples of Stray Magnetic Heating

An air-core reactor generates an unconstrained magnetic field whenever electrical current is passed through its windings. This magnetic field is most intense in the internal air-core and adjacent to the windings, and decreases in strength with increasing distance away from the reactor outer surface.

Since reactors are commonly used where the applied voltages and currents are AC, the magnitude of the magnetic field generated by the reactor varies proportionally with the current and the induction effect is proportional to the frequency of the current. By magnetic induction, a time-varying magnetic field creates electric current in metallic structures. This current, usually called eddy current, will cause losses and consequently a temperature rise in these structures. The magnitude of these eddy currents is a function of the magnitude of the magnetic field and the time rate of charge of the magnetic field.

The following recommendations have the objective of avoiding undue heating effects in metallic structures due to eddy currents. The final outline drawing, which is usually part of the documentation supplied by the manufacturer with each reactor, normally contains some "rule of thumb" information regarding magnetic field effects and magnetic clearances. The clearances to metallic parts are often provided on the drawings in terms of a recommended magnetic clearance contour (MC) for small metallic parts. Further information regarding reactor magnetic clearances is provided in IEEE C57.16 standard requirements, terminology and test code for dry-type air-core series connectors, reactors, annex.

A typical magnetic clearance contour may derive from a limiting level for the magnetic field strength, typically on the order of a few milliTesla. Outside this contour, the magnetic field strength is attenuated to such a degree that stray heating of "small" metallic parts is negligible. Several factors such as the type of metal, geometry of the part, and its orientation vs. the magnetic field have an impact on the thermal effects. However, as a rule of thumb any metallic object that is less than 200 mm (8 in.) × 200 mm (8 in.) × 200 mm (8 in.) may be regarded as small.

The main concern regarding eddy current heating effects can be more extensive in metallic geometries or structures consisting of sheets, grids, rods, or wires forming closed loops that are crossed by the magnetic field; especially for large dry-type air-core reactors.

Examples of such structures are

- Reinforced concrete utilizing steel rebar or grids forming closed loops
- Metallic fences near a reactor
- Metal sheets for roofing and wall cladding
- Copper grounding grids or conductors forming closed loops
- Sky wires, etc. for lightning protection

www.EngineeringEbooksPdf.com

For such structures, it is recommended to maintain a distance to the reactor surface, which is at least twice the value shown on the reactor outline drawing for the magnetic clearance to small metallic parts. This contour is also usually included on drawings. In some cases, only a portion of the loop may lie within the second clearance contour identified above, with the other section of the circuit outside the contour. These types of loops should also be avoided.

The rebar in concrete pads and foundations for large reactors (typically ratings greater than 500 kVA), installed outdoors and the rebar in the floor underneath or in the ceiling above large reactors installed indoors, become of concern for possible eddy current heating effects, due to the magnetic field of the reactor. Such effects may be mitigated by providing a nonmetallic separation between all individual steel rebar rods so as to avoid the formation of loops. It is further recommended to maintain a maximum rebar rod diameter (roughly 12 mm) to minimize the induction of eddy currents in the rods themselves. Fiberglass rebar or non metallic fiber reinforced concrete may be used to eliminate potential stray magnetic heating of the concrete near a large reactor.

Continuous metallic fencing or other closed loops around reactors may also experience local hot spots or sparking as gates are opened or closed. Therefore, it is recommended to isolate (sectionalize) the fence sections by using double posts, including gates with only one ground per fence section. Another option is to consider nonmetallic fencing materials; true nonmetallic fencing materials and not vinyl clad.

Where large electrical loops exist around the reactors at distances even beyond the rule of thumb minimum clearances described above, it is recommended to avoid any high resistance contact points between loop sections. For example, where sheet steel roof or wall sections are used near the reactors (within say five times the magnetic clearance contour distance for small parts), care should be taken at the sheet joints and fastening points. The panel sections should either be electrically isolated from each other and from structural steel elements, or the electrical contact resistance between sheets and between sheets and structural members should be on the same order as the electrical resistance of the sheets themselves. In this case, any induced current in the panel sections will not be forced through high resistance contact points, which could cause local overheating. Instead, the panels will experience an insignificant, more uniform temperature rise over the entire surface area (see Figure 11.54).

A circulating current, *I*, is forced through points A and B. The concentrated current flowing through these points creates local hot spots. Therefore, these sheets should either be electrically isolated with some small barrier strip or the two sheets can be welded together or bolted at many points to form a low resistance contact between sheets.

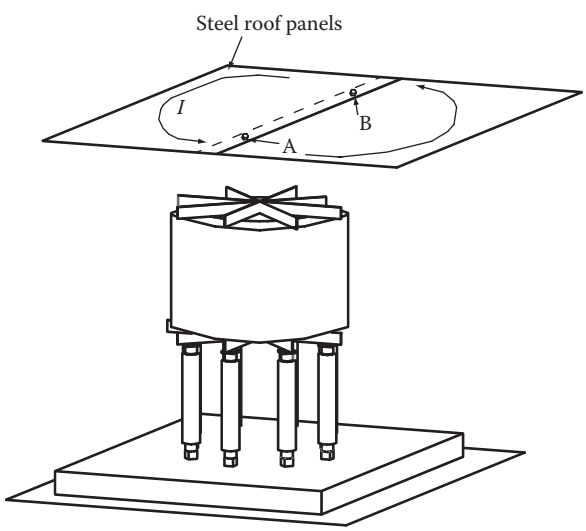

FIGURE 11.54 Example of improper joining of panels and potential local overheating.

www.EngineeringEbooksPdf.com

11.11.5 Partial Indoor Installation

Where a roof is constructed above the reactors, but one or more walls are left open to the environment, care should be taken to ensure that the reactors are adequately protected by the roof from contamination and rain. The roof overhang should extend out beyond the edge of each reactor at least the same distance as the roof is above the top edge of the reactors.

11.11.6 Room Ventilation

When dry-type air-core reactors are installed indoors, it is important to ensure adequate ventilation is provided to keep the ambient temperature around the reactors to temperature values stated in the reactor specification and per the appropriate international standard; consistent with maximum and 24 h average ambient temperature.

Ideally, the air around the reactors should be calm. Where forced air cooling is necessary, care should be taken not to force the air stream directly toward the reactors, since this may disturb the natural convective airflow up the reactor cooling ducts and cause the reactor windings to overheat in some areas.

Any forced air cooling should be directed as much as possible away from the reactor windings, with baffles or other apparatus used to disperse the air stream and calm the air around the reactor.

If these general recommendations are considered when installing reactors indoors, the potential for local hot spots can be eliminated. If in doubt, the reactor manufacturer, upon request can often provide specific guidance and analysis for particular reactor installation sites.

References

1. IEEE, *Standard Requirements, Terminology and Test Code for Shunt Reactors Rated Over 500 kVA*, IEEE C57.21-1990 (R1995), Institute of Electrical and Electronics Engineers, Piscataway, NJ, 1995.
2. IEEE, *Standard Requirements, Terminology and Test Code for Dry-Type Air Core Series Connected Reactors*, IEEE Std. C57.16-1996, Institute of Electrical and Electronics Engineers, Piscataway, NJ, 1996.
3. IEEE, *General Requirements and Test Code for Dry Type and Oil-Immersed Smoothing Reactors for DC Power Transmission*, IEEE Std. 1277-2002, Institute of Electrical and Electronics Engineers, Piscataway, NJ, 2002.
4. IEEE Green Book, IEEE Std. 142-1991, Institute of Electrical and Electronics Engineers, Piscataway, NJ, 1991.
5. NEMA, Motors and generators, Part 22, NEMA MG 1-1987, National Electrical Manufacturers Association, Rosslyn, VA, 1987.
6. Westinghouse Electric Corporation, Electrical transmission and distribution reference book, 4th ed., Westinghouse Electric Corporation, East Pittsburgh, PA, 1964.
7. IEEE, *Standard Requirements, Terminology, and Test Procedure for Neutral Grounding Devices*, IEEE Std. 32-1972, Institute of Electrical and Electronics Engineers, Piscataway, NJ, 1972.
8. IEEE, *Standard for AC High-Voltage Circuit Breakers on a Symmetrical Current Basis-Preferred Ratings and Related Required Capabilities for Voltages Above 1000 V*, IEEE C37.06–2009, Institute of Electrical and Electronics Engineers, Piscataway, NJ, 2009.
9. IEC, High-voltage switches, part 1: Switches for rated voltages above 1 kV and less than 52 kV. Part 2: High-voltage switches for rated voltages of 52 kV and above. IEC 60265-1998, International Electro Technical Commission, Geneva, Switzerland, 1998.
10. Bonheimer, D., Lim, E., Dudley, R.F., and Castanheira, A., A modern alternative for power flow control, IEEE/PES Transmission and Distribution Conference, Dallas, TX, September 22–27, 1991.
11. Power System Relaying Committee Report prepared by the Shunt Reactor Protection Working Group, Shunt reactor protection practices, IEEE/PES 1984 Meeting, Dallas, TX, January 19–February 3, 1984.

www.EngineeringEbooksPdf.com

12. IEEE, *Guide for the Protection of Shunt Reactors*, IEEE C37.109-1988, Institute of Electrical and Electronics Engineers, Piscataway, NJ, 1988.
13. Bonner, J.A., Hurst, W., Rocamora, R.G., Dudley, R.F., Sharp, M.R., and Twiss, J.A., Selecting ratings for capacitors and reactors in applications involving multiple single tuned filters, *IEEE Trans. Power Delivery*, 10(1), 547–555, January 1995.
14. Peelo, D.F. and Ross, E.M., A new IEEE application guide for shunt reactor switching, *IEEE Trans. Power Delivery*, 11, 881–887, 1996.
15. IEEE, *Application Guide for Shunt Reactor Switching*, IEEE Std. C37.015-1993, Institute of Electrical and Electronics Engineers, Piscataway, NJ, 1993.
16. CIGRE Working Group 13.02, Interruption of small inductive currents, Chapter 4, part A, *Electra*, 101, 13–39, 1985.
17. IEC, *High-Voltage Switchgear and Controlgear. Part 100: High-Voltage Alternating Current Circuit Breakers*, IEC 62271-100-2003, International Electrotechnical Commission, Geneva, Switzerland, 2003.
18. IEEE, *Application Guide for Transient Recovery Voltage for AC High-Voltage Circuit Breakers Rated on a Symmetrical Current Basis*, IEEE Std. C37.011-1994, Institute of Electrical and Electronics Engineers, Piscataway, NJ, 1994.
19. Skeats, W.F., Short-circuit currents and circuit breaker recovery voltages associated with two-phase-to-ground short circuits, *AIEE Trans. Power Appar. Syst.*, 74, 688–693, 1955.
20. IEEE, *Loss Evaluation Guide for Power Transformers and Reactors*, IEEE Std. C57.120.1991, Institute of Electrical and Electronics Engineers, Piscataway, NJ, 1991.
21. Diamanti, P., Power-line carrier: Still the lowest-cost medium for communications, Electrical World, August 1998.
22. McGuire, D. and Diamanti, P., Criteria for specification of line traps carrier frequency requirements, Pennsylvania Electric Association—Relay Committee Meeting, January 25, 1992.
23. ANSI C93.3-1995, American National Standard—Requirement for Power-Line Carrier Line Traps, National Electrical Manufacturers Association, Rosslyn, VA, 1996.
24. IEC 60353-1989 Line Traps for AC Power Systems, International Electrotechnical Commission, Geneva, Switzerland, 1989.

www.EngineeringEbooksPdf.com

12

Insulating Media

Thomas A. Prevost
Omicron Electronics Corp.

David L. Hanson
TJ/H2b Analytical Services

Leo J. Savio
ADAPT Corporation

Ted Haupert
TJ/H2b Analytical Services

12.1 Introduction **12**-1
12.2 Liquid Insulation: Oil **12**-1
Composition of Oil • Functions of Oil • Parameters That Affect Oil Degradation
12.3 Liquid Insulation: Alternative Fluids **12**-5
12.4 Solid Insulation **12**-5
Paper and Pressboard from Wood Pulp • Paper Insulation • Crepe Paper • Thermally Upgraded Paper • Pressboard Insulation • Mechanical Role of Insulation • Dielectric Role of Insulation • Moisture in the Insulation System
12.5 Contamination **12**-17
External • Internal
References **12**-17

12.1 Introduction

Transformers have been around for over 125 years. Very early in the development of transformers, the use of oil was established for its insulating as well as cooling functionality. Since the turn of the twentieth century, the standard insulating media for power transformers have been mineral oil and cellulose.

The life of a power transformer is established by the life of its insulation system. Since a transformer is a static device, there is essentially no wear due to movement. The life of a transformer is limited by the life of the insulation. When the insulation ultimately reaches its end of life, the transformer will fail due to a dielectric or mechanical failure. Fortunately, the oil can be drained from the transformer and reclaimed or replaced. The solid insulation, however, cannot be replaced and therefore is the limiting factor in the life of a transformer. Understanding the purpose and use of the insulation materials and controlling them are then essential in understanding the life of a transformer.

Insulating media in high-voltage transformers consist of paper wrapped around the conductors in the transformer coils plus mineral oil and pressboard to insulate the coils from ground. From the moment a transformer is placed in service, both the solid and liquid insulation begin a slow but irreversible process of degradation.

12.2 Liquid Insulation: Oil

The insulating fluid that has the greatest use in electrical equipment is mineral oil. There are insulating materials that may be superior to mineral oil with respect to both dielectric and thermal properties; however, to date, none has achieved the requisite combination of equal or better performance at an equal or better price. Consequently, mineral oil continues to serve as the major type of liquid insulation used in electrical equipment.

www.EngineeringEbooksPdf.com

12.2.1 Composition of Oil

12.2.1.1 Types of Hydrocarbons and Properties of Each

Mineral oil can vary greatly in its composition. All mineral oils are mixtures of hydrocarbon compounds with about 25 carbon atoms per molecule. The blend of compounds that is present in a particular oil is dependent on several factors, such as the source of the crude oil and the refining process. Crude oils from different geographical areas will have different chemical structures (arrangement of the carbon atoms within the molecules). Crude oils from some sources are higher in *paraffinic* compounds, whereas others are higher in *naphthenic* compounds. Crude oils also contain significant amounts of aromatic and polyaromatic compounds. Some of the polyaromatic compounds are termed "heterocyclics" because, besides carbon and hydrogen, they contain other atoms such as nitrogen, sulfur, and oxygen. Some heterocyclics are beneficial (e.g., oxidation inhibitors), but most are detrimental (e.g., oxidation initiators, electrical charge carriers).

The refining of crude oil for the production of dielectric fluids reduces the aromatic and polyaromatic content to enhance the dielectric properties and stability of the oil.

The terms *paraffinic* and *naphthenic* refer to the arrangement of carbon atoms in the oil molecule. Carbon atoms that are arranged in straight or branched chains, that is, carbon atoms bonded to one another in straight or branched lines, are referred to as being *paraffinic*. Carbon atoms that are bonded to one another to form rings of generally five, six, or seven carbons are referred to as being *naphthenic*. Carbon atoms that are bonded as rings of benzene are referred to as being *aromatic*. Carbon atoms that are contained in "fused" benzene rings are referred to as being *polyaromatic*. These forms of bonded carbon atoms are depicted in Figure 12.1. The straight lines represent the chemical bonds between carbon atoms that are present (but not depicted) at the ends and vertices of the straight lines.

Figure 12.2 illustrates a typical oil molecule. Remember that a particular oil will contain a mixture of many different molecular species and types of carbon atoms. Whether a particular oil is considered paraffinic or naphthenic is a question of degree. If the oil contains more paraffinic carbon atoms than naphthenic carbons, it is considered a paraffinic oil. If it contains more naphthenic carbons, it is considered a naphthenic oil.

The differences in the chemical composition will result in differences in physical properties and in the chemical behavior of the oils after they are put in service. The chemical composition has profound effects on the physical characteristics of the oil.

For electrical equipment, the main concerns are as follows:

- Paraffinic oils tend to form waxes (solid compounds) at low temperature.
- Paraffinic oils have a lower thermal stability than that of naphthenic and aromatic oils.
- Paraffinic oils have a higher viscosity at low temperature than that of naphthenic and aromatic oils.

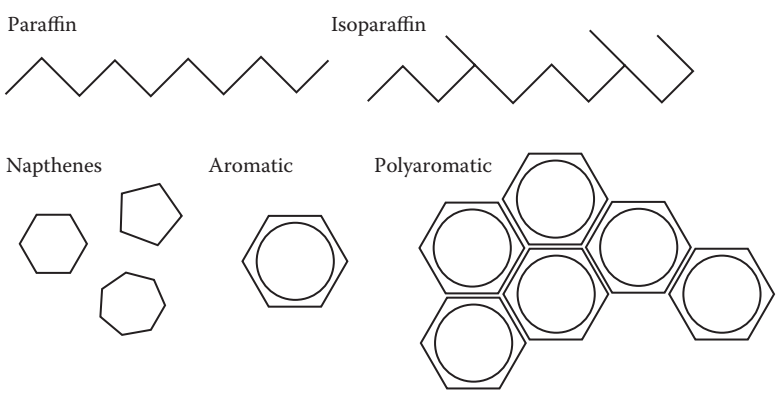

FIGURE 12.1 Carbon configuration in oil molecules.

www.EngineeringEbooksPdf.com

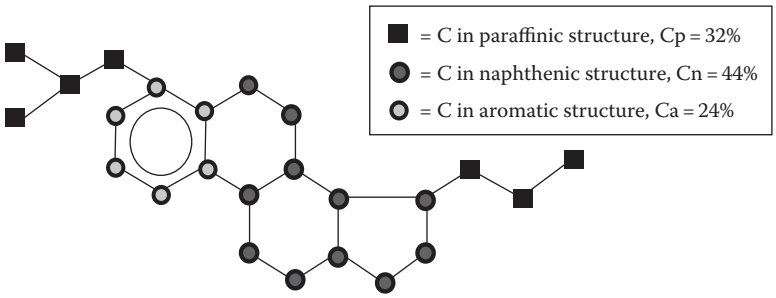

FIGURE 12.2 Typical oil molecule.

These factors can impair the performance of high-voltage electrical equipment. The first two factors have an unfavorable effect on the dielectric characteristics of the oil. The third factor unfavorably affects the heat/dissipation ability of the oil. Unfortunately, the availability of insulating oil is limited. Therefore, electrical equipment owners have a choice of only a few producers, who produce only a very few different products.

12.2.1.2 Oxidation Inhibitors

Oxidation inhibitors, such as DBPC (di-tertiary butyl paracresol) and DBP (di-tertiary butylphenol), are often added to oil to retard the oxidation process. These compounds work by attracting oxygen molecules to themselves rather than allowing oxygen to bind with oil molecules. With time, the inhibitor gets consumed because of its preferential reaction with oxygen. As a result, the oil will then oxidize at a more rapid rate. The remedy is to add inhibitor to oil that has lost its antioxidant capabilities.

12.2.2 Functions of Oil

12.2.2.1 Electrical Insulation

The primary function of insulating oil is to provide a dielectric medium that acts as insulation surrounding various energized conductors. Another function of the insulating oil is to provide a protective coating to the metal surfaces within the device. This coating protects against chemical reactions, such as oxidation, that can influence the integrity of connections, affect the formation of rust, and contribute to the consequent contamination of the system.

Insulating oil, however, is *not* a good lubricant. Despite this fact, it is widely used in load tap changers, circuit breakers, and transformers. Therefore, its use in these devices presents a challenge to the mechanical design of the system.

12.2.2.2 Heat Dissipation

A secondary function of the insulating fluid is to serve as a dissipater of heat. This is of particular importance in transformers where localized heating of the windings and core can be severe. The oil aids in the removal of heat from these areas and distributes the thermal energy over a generally large mass of oil and the tank of the device. Heat from the oil can then be transferred by means of conduction, convection, and radiation to the surrounding environment.

All mineral oils are comparable in their ability to conduct and dissipate heat. To ensure that a given oil will perform satisfactorily with respect to heat dissipation, several specifications are placed on the oil. These specifications are based upon certain factors that influence the oil's ability to dissipate heat over a wide range of possible operating conditions. These factors include such properties as viscosity, pour point, and flash point.

www.EngineeringEbooksPdf.com

12.2.2.3 Diagnostic Purposes

The third function of the insulating fluid is to serve as an indicator of the operational condition of the liquid-filled equipment. The condition (both chemical and electrical) of the insulating fluid reflects the operational condition of the electrical device. In a sense, the fluid can provide diagnostic information about the electrical device much like blood can provide diagnostic information about the human body. The condition of the blood is important as it relates to its primary function of transporting oxygen and other chemical substances to the various parts of the body. Indeed the condition of the blood is symptomatic of the overall health of the body. For example, the analysis of the blood can be used to diagnose a wide variety of health problems related to abnormal organ function.

In much the same way, insulating fluid can be viewed as serving its primary functions as an insulator and heat dissipater. It can also be viewed as serving another (and perhaps equally important) function as a diagnostic indicator of the operational health of liquid-filled equipment. This is possible because when faults develop in liquid-filled equipment, they cause energy to be dissipated through the liquid. This energy can cause a chemical degradation of the liquid. An analysis for these degradation products can provide information about the type of fault that is present.

12.2.3 Parameters That Affect Oil Degradation

12.2.3.1 Heat

Just as temperature influences the rate of degradation of the solid insulation, so does it affect the rate of oil degradation. Although the rates of both processes are different, both are influenced by temperature in the same way. As the temperature rises, the rates of degradation reactions increase.

For every 10°C rise in temperature, reaction rates double!

12.2.3.2 Oxygen

Hydrocarbon-based insulating oil, like all products of nature, is subject to the ongoing, relentless process of oxidation. Oxidation is often referred to as aging. The abundance of oxygen in the atmosphere provides the reactant for this most common degradation reaction. The ultimate products of oxidation of hydrocarbon materials are carbon dioxide and water. However, the process of oxidation can involve the production of other compounds that are formed by intermediate reactions, such as alcohols, aldehydes, ketones, peroxides, and acids.

12.2.3.3 Partial Discharge and Thermal Faulting

Of all the oil degradation processes, hydrogen gas requires the lowest amount of energy to be produced. Hydrogen gas results from the breaking of carbon–hydrogen bonds in the oil molecules. All of the three fault processes (partial discharge, thermal faulting, and arcing) will produce hydrogen, but it is only with partial discharge or corona that hydrogen will be the only gas produced in significant quantity. In the presence of thermal faults, along with hydrogen will be the production of methane together with ethane and ethylene. The ratio of ethylene to ethane increases as the temperature of the fault increases.

12.2.3.4 Arcing

With arcing, acetylene is produced along with the other fault gases. Acetylene is characteristic of arcing. Because arcing can generally lead to failure over a much shorter time interval than faults of other types, even trace levels of acetylene (a few parts per million) must be taken seriously as a cause for concern.

12.2.3.5 Acid

High levels of acid (generally acid levels greater than 0.6 mg KOH/g of oil) cause sludge formation in the oil. Sludge is a solid product of complex chemical composition that can deposit throughout the transformer. The deposition of sludge can seriously and adversely affect heat dissipation and ultimately result in equipment failure.

www.EngineeringEbooksPdf.com

12.3 Liquid Insulation: Alternative Fluids

There are other dielectric fluids used in liquid-filled transformers today. These fluids are used primarily for their enhanced thermal and flammability properties. Mineral oil has a fire point of 165°C. This value has proved to be too low for applications inside or near buildings. Large transformers for indoor use must either be of the dry type, that is, containing no liquid, or use a less-flammable liquid.

Well into the 1970s, polychlorinated biphenyls (PCBs) were often used as a dielectric fluid since they are not flammable. They are toxic, and under incomplete combustion, can form highly toxic products. Starting in the early 1970s, concerns about the toxicity of PCBs have led to their banning in many countries.

Today, silicon-based or fluorinated hydrocarbons are used, where the added expense of a fire-resistant liquid offsets additional building cost for a transformer vault. Combustion-resistant vegetable-oil-based dielectric coolants and synthetic esters are also becoming increasingly common as alternatives to naphthenic mineral oil. Esters are nontoxic to aquatic life, are readily biodegradable, and have a lower volatility and a higher flash point than mineral oil.

A comparison of these fluid properties is summarized in Table 12.1. Important criteria for the use of alternative fluids include viscosity, dielectric strength, oxidation stability, and material compatibility.

12.4 Solid Insulation

The primary material used for the solid insulation in liquid-filled transformers has, up to now, been cellulose-based material. The primary reasons for this are its availability, relatively low cost, and mechanical and dielectric performance. The earliest materials used in transformers were cotton-based cloths. These were quickly replaced with cellulosic papers and pressboards. It was quickly understood that the purity of the insulation for dielectric reasons and the strength of the insulation for mechanical reasons were paramount in the performance of the insulation system. Since early in the twentieth century, cellulose paper and pressboard made from unbleached pulp obtained by the kraft (sulfate) process have been the material of choice in liquid-filled transformers.

12.4.1 Paper and Pressboard from Wood Pulp

Electrical-grade paper and pressboard are mostly made from wood pulp processed by the kraft chemical process, hence known as kraft paper and kraft board (*kraft* is *German* for *strong*). The starting material is wood, both soft wood and hard wood. Wood is a natural composite material that is made up of flexible tubes of cellulose bound together by lignin, a brownish aromatic polymer that is mostly removed during the pulping process. A schematic representation of the fine structure of wood pulp is shown in Figure 12.3.[1]

TABLE 12.1 Typical Properties of Transformer Fluids

Property	Test Method	Mineral Oil	Silicone Fluid	Natural Ester
Viscosity, cSt, @ 100°C	ASTM D-445	2.6	15.0	8.4
Density, kg/dm^3, @ 20°C	ASTM D-1298	0.88	0.96	0.83
Pour point, °C	ASTM D-97	−50	−50	−21
Dielectric breakdown @ 0.080″ gap	ASTM D-1816	56	60	52
Dissipation factor @ 100°C	ASTM D-924	0.002	0.001	3.0
Dielectric constant @ 20°C	ASTM D-924	2.2	2.7	3.1
Neutralization number, mg KOH/g	ASTM D-974	0.03	0.01	0.03
Fire point, °C	ASTM D-924	165	350	360

www.EngineeringEbooksPdf.com

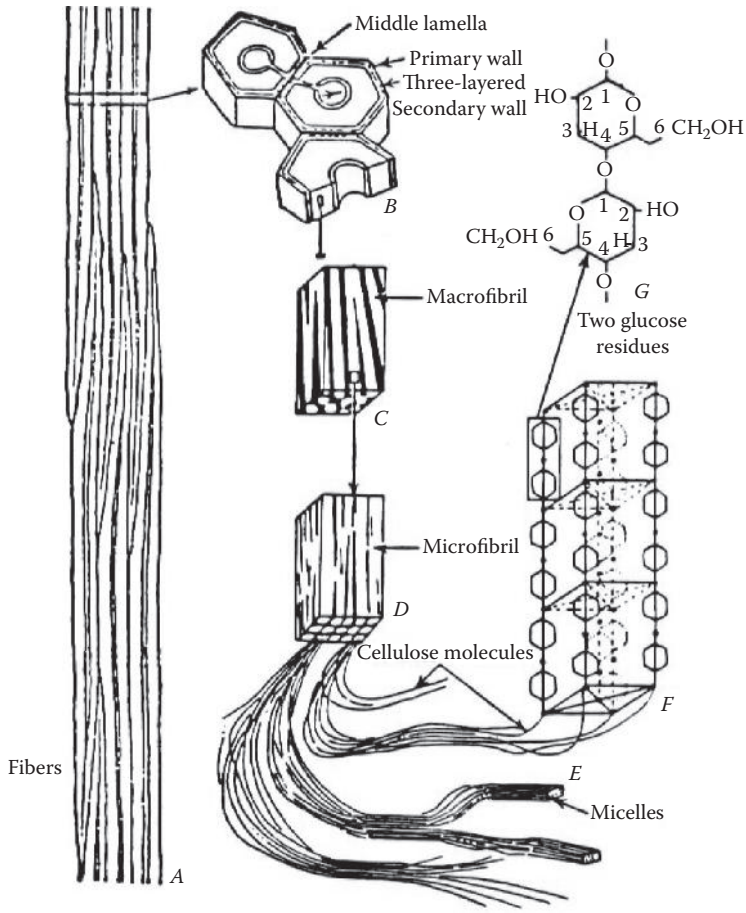

FIGURE 12.3 Structure of wood.

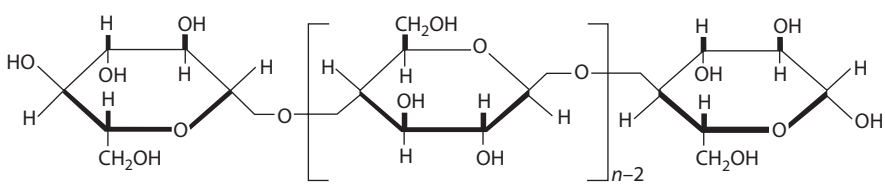

FIGURE 12.4 Chemical structure of cellulose.

Cellulose, the essential component of paper and pressboard, is a polymer of glucose units linked to one another in a special manner as shown in Figure 12.4. It may be represented simply as $[C_5H_{10}O_5]_n$ ignoring the extra atoms on the end groups, where n is the degree of polymerization (DP). The repeating unit, however, is cellobiose consisting of two glucose units.

The DP values for paper samples can be estimated from specified methods such as ASTM D-4243. The typical range of DP for kraft pulps is from 1100 to 1200. Other fiber blends such as hemp–kraft can have much higher DPs, for example, 1400–1600. These blends were developed to increase the initial mechanical strength of the paper; however, these blends degrade faster because of the impurities contained in the non-kraft fibers.

Soft woods (e.g., southern pine, Douglas fir, spruce, all conifers) contain typically 42% cellulose and 28% lignin; hardwoods (e.g., birch, aspen, red gum) contain 45% cellulose and 20% lignin [6].

www.EngineeringEbooksPdf.com

In addition to cellulose, wood contains hemicellulose composed of mixed sugars, for example, glucose and mannose (glucomannan) with smaller chain length than cellulose. Softwood may contain on the average 27% hemicellulose. Both the lignin and the hemicellulose need to be removed from the finished pulp as much as possible. The most significant differences between soft and hard woods are fiber length (softwoods, 2–6 mm; hardwoods, 0.6–1.5 mm) and coarseness (softwoods, 15–35 mg/100 mm; hardwoods, 5–10 mg/100 mm). Fiber coarseness is defined as weight per fiber length and is normally expressed in units of milligrams per meter or grams per meter. Coarseness depends on fiber diameter, cell wall thickness, cell wall density, and fiber cross section. Softwood fibers provide strength; hardwood fibers provide more smoothness and evenness in machine and cross machine directions. Mixed pulps are therefore of advantage in making paper and pressboard. Due to the need for higher mechanical strength, the majority of the pulp used for paper and pressboard insulation for transformers is from softwood.

In the chemical pulping process for making kraft pulp, wood chips are digested in a pressure-cooker-type digester with "white liquor," a mixture of sodium hydroxide and sodium sulfide solutions. Lignin is selectively dissolved and removed, though about 5% remains. For electrical-grade pulp, no bleaching is done, but careful washing is required to remove ionic materials. The pulp is made into easily breakable sheets.

The pulp sheets are fed into a large vat where the fibers are separated and mixed with water to the right consistency. The fibers are mechanically treated (refined), cleaned, and then transferred onto a moving felt. There are two processes for the application of pulp fibers onto the felt. One is the cylinder process in which pulp is deposited on a screen covering a rotating cylinder. Several cylinders can be placed in series in order to yield thicker papers. The cylinders are pressed against a rotating felt which thereby transfers the layer of pulp fibers onto the felt. The second process is the Fourdrinier process, in which the pulp is formed in one layer onto a screen and then transferred onto the rotating felt. The cylinder process is typically used for electrical-grade papers because the multiple layers provided by successive cylinders minimize the probability of getting a hole in the paper. The remainder of the process removes the water from the pulp layer through a series of rotating presses and drying cylinders. Figure 12.5 shows a cylinder press for papermaking.[2]

Pressboard is made in a similar manner as paper. The pulp fiber is applied to a rotating felt using the cylinder process. The layer of wet fiber is collected on a forming cylinder until the desired thickness is achieved. It is then cut from the cylinder forming a sheet which is subsequently dried.

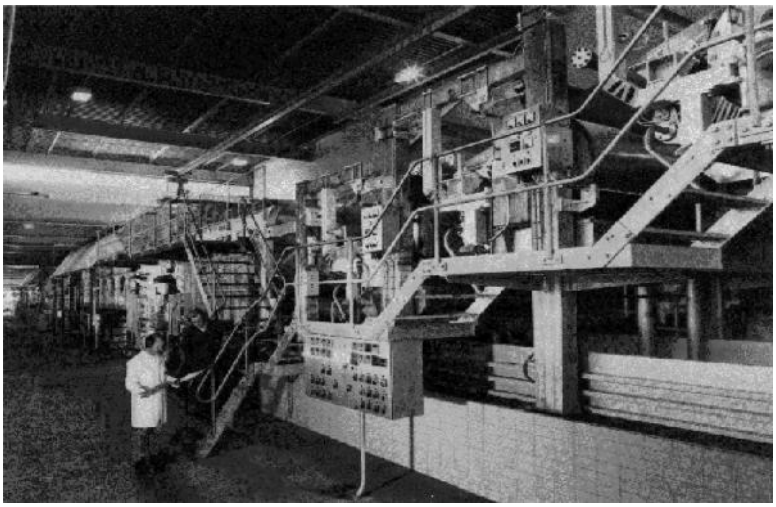

FIGURE 12.5 Cylinder-type paper machine.

www.EngineeringEbooksPdf.com

There are two types of pressboards manufactured today. These are based on the drying process of the pressboard sheets. In one process, the wet pressboard sheets are dried in an oven. The dried sheet is then calendared to achieve the desired thickness and density. This process yields a pressboard sheet with a density in the range of 0.95–1.05 gm/cm^3.

In the alternative process, the wet pressboard sheets are dried under pressure in a heated press. This process, which is known as the precompressed process, yields a pressboard sheet with a density in the range of 1.10–1.25 gm/cm^3. Calendared pressboard sheets are used as barriers and for components which require forming into shapes such as winding end insulation. Precompressed pressboard is used for winding spacers, winding cylinders, and end insulation. Several tons of pressboard and paper insulation are used in large and medium power transformers.

12.4.2 Paper Insulation

Paper insulation is used to insulate the conductors within each winding and the leads. Important characteristics for paper insulation are dielectric strength, mechanical strength, and thermal performance.

The dielectric strength of the paper will determine how much paper is required in order to withstand the voltage differential between turns. The transformer designer must have sufficient insulation to withstand the normal operating voltage at low frequency (50 or 60 Hz) as well as the higher stresses during impulse or switching surges. To optimize the dielectric strength of the paper insulation, it is preferred to build up the insulation in layers using thin paper (typically in the range of 0.003″–0.005″ (0.075–0.125 mm) (Figure 12.6).

The mechanical strength of paper conductor is controlled during the paper manufacturing process. The pulp type, fiber development, and machine speed are three of the critical parameters for strong paper. The paper strength is measured by tensile strength, tensile elongation, burst strength, and tear strength. The tear strength is typically the limiting factor for the transformer manufacturer when wrapping the copper conductor.

12.4.3 Crepe Paper

A significant improvement to conductor insulation was accomplished with the development of crepe paper turn insulation. Crepe paper for turn insulation was introduced in the 1970s. The transformer manufacturers of the time were interested in a tear-free paper for taping. The tough hemp–kraft paper used for taping at the time had very little stretch and frequently tore in application. The crepe paper has as much as 20% stretch (elongation). The creping is done on the regular sheet of paper. The paper goes through an aqueous bath containing a creping compound and is applied to a rotating drum and then picked up by another drum revolving at a slower speed. This process produces continuous folds in the paper which increase its elongation or stretch. The paper is then calendared to its desired thickness. The crepe paper described here should not be confused with uncalendared crepe insulation with stretch values ranging from 50% to 200%. These crepe papers are typically utilized to insulate leads. The high elongation values enable the insulation to remain tightly wrapped on the leads while the leads are bent into place.

The thermal performance of the conductor insulation is a critical parameter in the life of the transformer insulation system. The insulation must transfer the heat generated by losses in the conductor to the transformer fluid. Denser and thicker conductor insulation inhibits this heat transfer which leads to a compromise between the dielectric design and the thermal design.

12.4.4 Thermally Upgraded Paper

The thermal limit of transformer windings is the insulation on the conductor at the winding hot spot. The average winding rise is calculated in Table 12.2.

www.EngineeringEbooksPdf.com

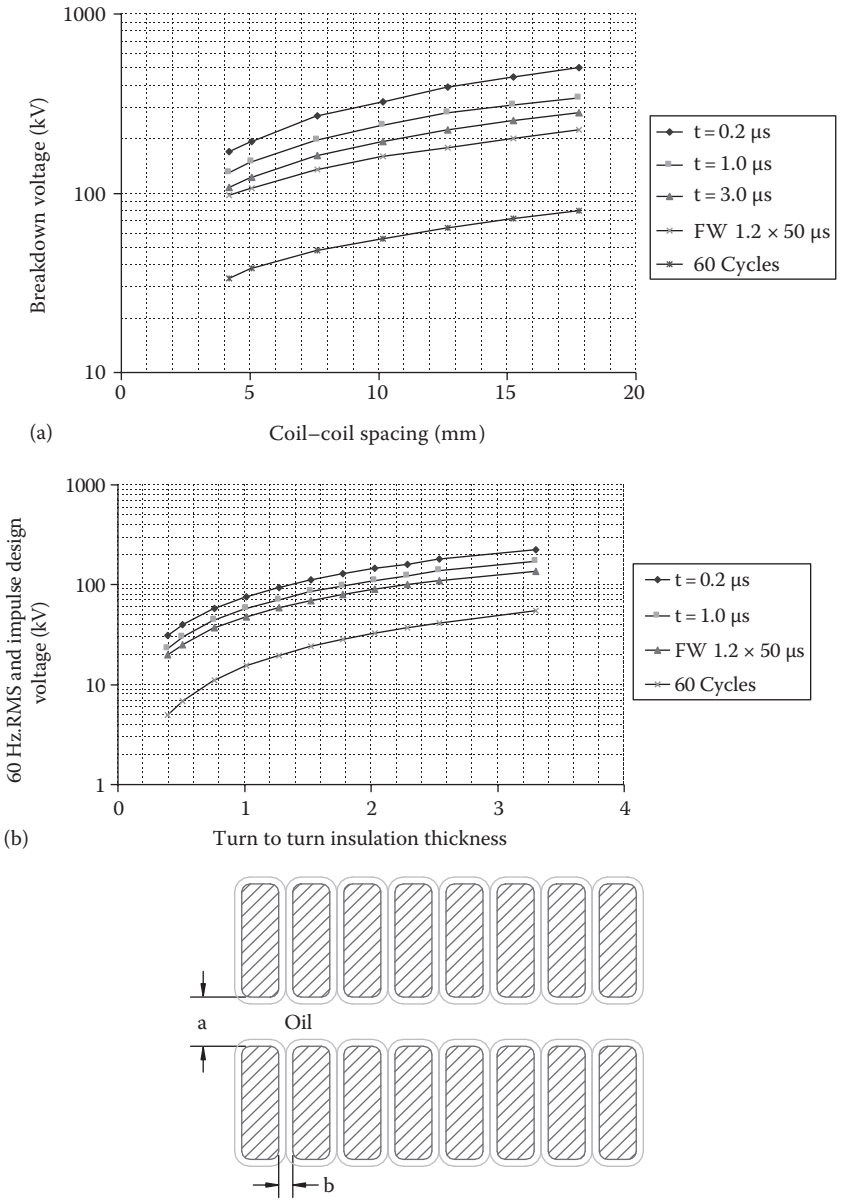

FIGURE 12.6 Example of section-to-section (a) and turn-to-turn (b) insulation design strength.

TABLE 12.2 Indicated Temperatures and Temperature Rises for 55°C and 65°C Insulation

	55°C Rise	65°C Rise
Ambient	30°C	30°C
Average winding rise	55°C	65°C
Hot spot differential	10°C	15°C
Hot spot temperature	95°C	110°C[a]

[a] Only attainable with thermally upgraded insulation.

www.EngineeringEbooksPdf.com

In the late 1950s, several transformer manufacturers introduced thermally upgraded cellulose insulation. In 1962, the National Electrical Manufacturers Association (NEMA) officially recognized the improved insulation in standard TR-1-1962 by establishing another temperature rise limit of 65°C for oil-immersed transformers using treated paper. Prior to that, the norm was a 55°C average winding rise transformer. This additional 10° allowed the manufacturer to increase the load by 12% or conversely ship a smaller transformer for the same power rating. The use of thermally upgraded insulation became the norm in transformers by the mid-1960s, with most units rated at 65°C rise.

Several upgrading agents were tested by different researchers; the most successful formulas used amine compounds, particularly dicyandiamide ("dicy"). Westinghouse Electric researchers introduced "Insuldur" in 1958, improved further in 1960.[3] The major component of this is dicy (over 60%); the others are melamine (over 30%) and polyacrylamide. The Insuldur content should be in the 2.75%–4.0% by weight range, corresponding to a nitrogen content of 1.74%–2.54% in the paper. The combination of the chemicals has been found to be more effective than just the dicy. However, some transformer papers are made with only dicy upgrading.

12.4.5 Pressboard Insulation

In liquid-filled power transformers, the insulation must provide three primary functions:

1. Dielectric
2. Mechanical
3. Thermal

While paper insulation is used to insulate the winding conductors and leads, it does not provide any mechanical support. Pressboard, a cellulose-based insulating material which can be manufactured in thickness ranging from 1 to 8 mm (0.040″–0.320″), is ideally suited for this purpose. Based on the manufacturing process, pressboard is available in two density ranges. Low-density pressboard is used in applications in which the insulation is used as a barrier and strength is not a factor. High-density pressboard is used when the insulation is under compression, such as within the winding or where high strength is required such as a cylindrical winding form. For additional strength, a laminated pressboard material is also available. Sheets as thick as 150 mm (6″) are manufactured by laminating sheets of pressboard with polyester-based adhesive. This material is used for support blocks, beams, and clamping plates.

12.4.6 Mechanical Role of Insulation

A primary role of pressboard insulation in power transformers is to support the windings during short circuits. Short circuit forces have two components: radial and axial (see Figure 12.7). Axial forces are such that the inner winding tries to compress, generating buckling forces, while the outer winding tries to expand, generating hoop forces. Many designs today are self-supporting, utilizing the mechanical strength of the conductor itself to withstand the radial short circuit forces. In some cases, the designer depends on the mechanical strength of the winding cylinder to withstand these forces. The axial forces which act on a winding under short circuit are compressive in nature. The winding spacer must be able to withstand this compressive force without significant permanent deformation. Ideally the winding height will return to its original dimension following a short circuit event.

Examples of radial and axial short circuit failures are shown in Figure 12.8.

Pressboard insulation must have sufficient mechanical strength to support the windings during short circuits. It was for this purpose that precompressed pressboard was developed. By compressing and drying the wet pressboard sheet simultaneously, a density of 1.2 gm/cm^3 is obtained. (For comparative purposes, maple wood has a density of 0.6 gm/cm^3.) The density is increased further by milling the top and bottom surfaces of the pressboard in order to remove the screen pattern resulting from the sheet drying process. The ideal spacer material would be purely elastic, that is, it would return to its original

www.EngineeringEbooksPdf.com

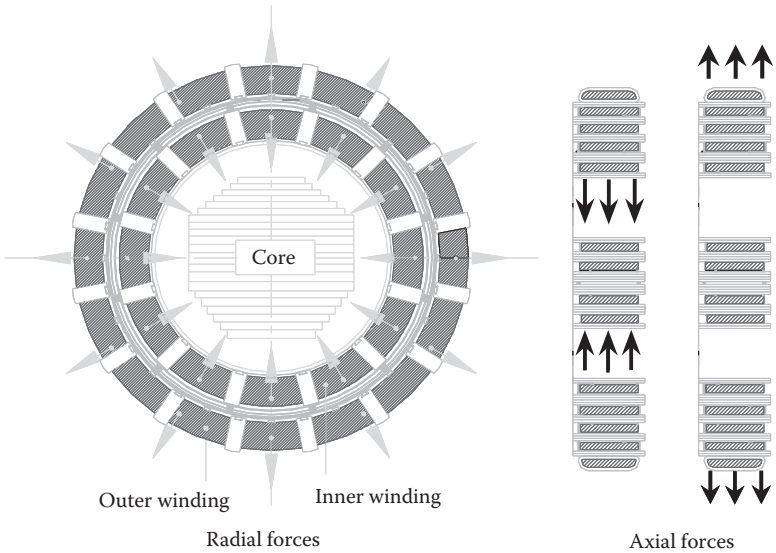

FIGURE 12.7 Transformer short circuit forces.

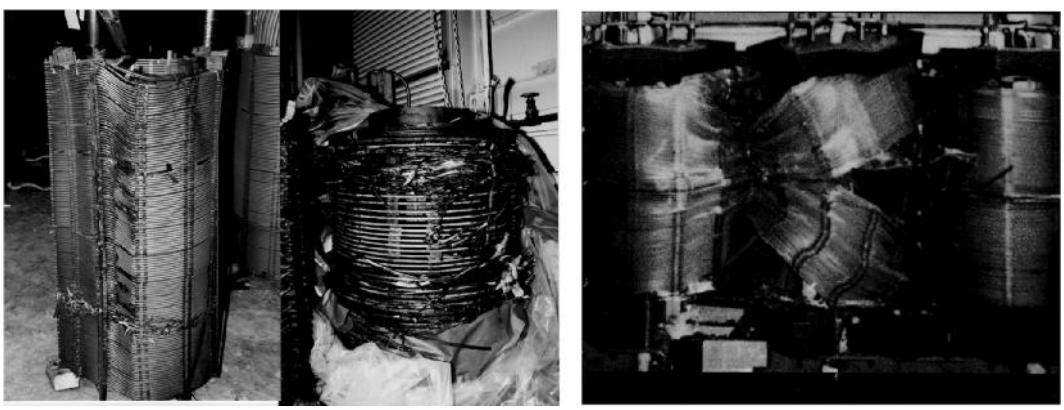

FIGURE 12.8 Radial short circuit failure and axial short circuit failure.

thickness after being compressed. High-density, milled pressboard spacers approach this characteristic as can be seen by the low compression set value in Figure 12.9. The high-density machined radial spacers are used within the winding to provide dielectric clearances and cooling ducts. The radial spacers have a slot machined on one end with a dovetail or "T" pattern so that it can be slid onto an axial spacer which is placed on the winding cylinder. Typically the axial spacer is machined so that the edges are smooth to avoid cutting into the conductor insulation.

12.4.7 Dielectric Role of Insulation

Cellulose insulation has excellent dielectric properties when it is properly dried and thoroughly impregnated with a high-quality dielectric fluid. There is significant discussion on what the proper level of dryout needs to be for the cellulose insulation. For medium power transformers up to 345 kV, a moisture level of 0.5% is considered by many to be acceptable. For EHV transformers greater than 345 kV,

www.EngineeringEbooksPdf.com

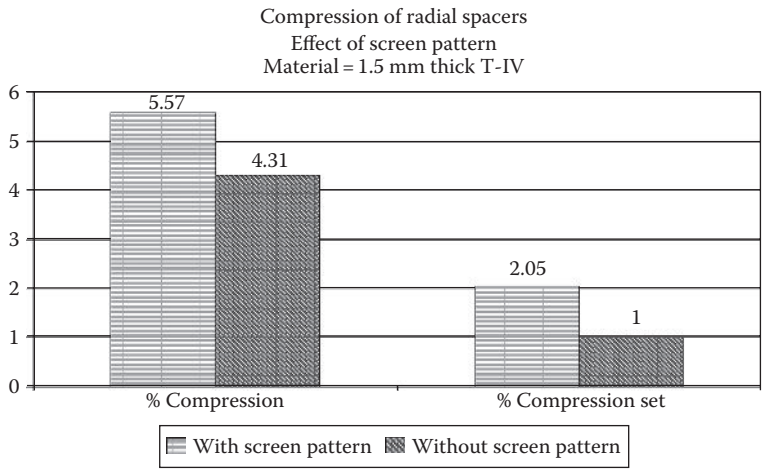

FIGURE 12.9 Compression characteristics of radial spacer material. *Note*: Tested in accordance with IEC 641-2 bedding pressure 1 MPa, compacting 20 MPa.

a moisture level of 0.3% is often required. High moisture content has other effects on the insulation system such as accelerated aging and bubble formation. These will be discussed later.

Cellulose insulation is utilized either to directly insulate components such as conductor and leads or to establish and maintain electrical clearances utilizing spacer material and barrier material. The dielectric strength of an insulation system is improved if it can be divided into smaller areas. Low-density pressboard barriers which can be formed into place are typically utilized for this purpose. For any specific insulation design, there exist in the transformer the following critical areas:

1. Solid insulation
2. Fluid
3. Interface between solid and fluid

In a transformer, the electrical stress will distribute capacitively. A simple model showing the stress distribution between two materials in a parallel plate capacitor is given in Figure 12.10. The voltage drop in each material is a function of the width (d) and the permittivity (ε) of the insulating material. The stress distributes inversely proportional to the permittivity of the material:

$$Z = (d_1/\varepsilon_1) + (d_2/\varepsilon_2)$$

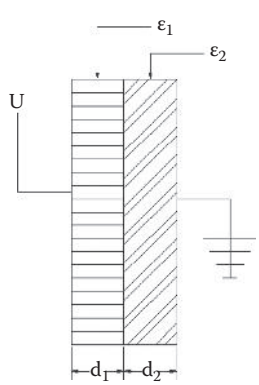

FIGURE 12.10 Dielectric stress distributes inversely proportional to the material permittivity.

www.EngineeringEbooksPdf.com

$$E_1 = U/(\varepsilon_1 * Z)$$

$$E_2 = U/(\varepsilon_2 * Z)$$

where

ε_1 is the permittivity in material 1
ε_2 is the permittivity in material 2
U is the applied voltage
E_1 is the stress in material 1
E_2 is the stress in material 2

The dielectric strength of the solid insulation (in this case, kraft insulation impregnated with a dielectric fluid) is close to an order of magnitude higher than the fluid itself. Thus, the weak material in the insulation structure is the fluid. By bringing the permittivities of the liquid and solid insulation closer together, more of the dielectric stress will be distributed in the solid material. This will reduce the stress in the fluid, which typically sets the design clearance. The permittivities of mineral oil and pressboard are given in Table 12.3.

The dielectric strength of a given oil gap is a function of the width of that gap as shown in Figure 12.11.[4] The insulation designer utilizes solid insulation barriers to divide an oil gap into smaller gaps

TABLE 12.3 Permittivity of Pressboard Impregnated with Mineral Oil and Mineral Oil

	Temperature		
Material	25°C	90°C	130°C
Mineral oil	2.4	2.3	2.2
Low density pressboard	3.9	3.9	4.1
High density pressboard	4.5	4.7	4.9

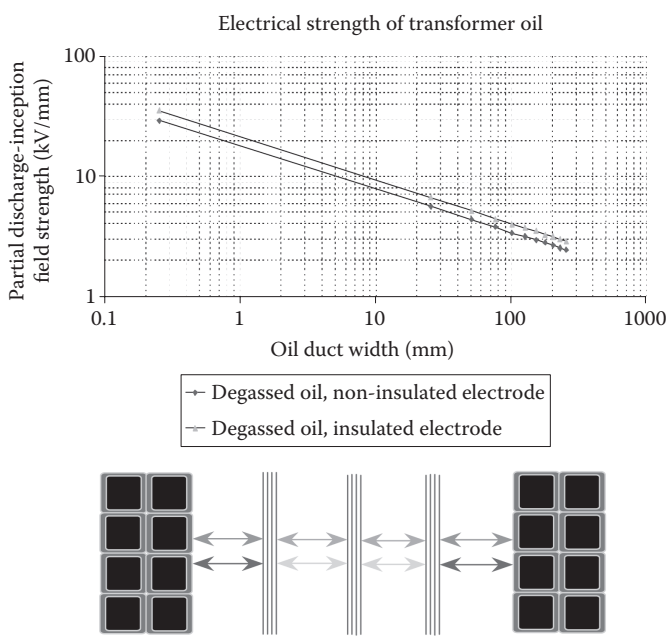

FIGURE 12.11 Weidmann oil curve.

www.EngineeringEbooksPdf.com

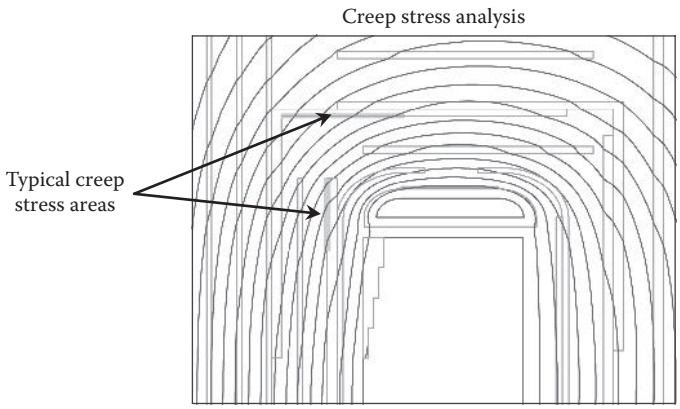

FIGURE 12.12 Field plot of end insulation creep stress.

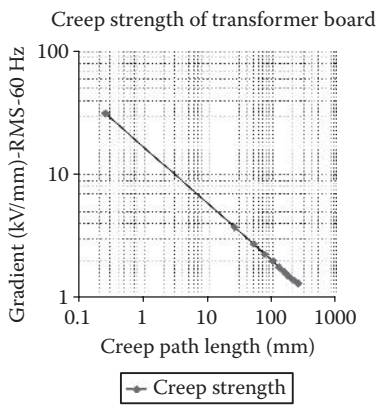

FIGURE 12.13 Weidmann creep curve.

in order to allow a higher average stress while preventing partial discharges. At the ends of windings, where the stress transitions from axial to radial orientation, contoured insulation is utilized.

Despite the application of contoured insulation components, there will exist in any transformer insulation system interfacial or creep stresses along the surface of the insulation components. This is shown graphically by a plot of the equipotential lines in a typical medium power transformer as shown in Figure 12.12.

Where the equipotential lines cross the surface of a given solid insulation component, there will be a voltage differential which creates a dielectric stress tangential to the surface of the solid insulation. The insulation system designer must be able to calculate this creep stress and assure that it is below design limits. Weidmann maintains a creep curve, which gives the design limit for creep stress in mineral oil based on 1% probability of partial discharge inception (see Figure 12.13).[5]

12.4.8 Moisture in the Insulation System

High moisture in the insulation system can cause the following:

- Accelerated aging of the cellulose
- Reduction in dielectric strength
- Bubble formation leading to dielectric failure

www.EngineeringEbooksPdf.com

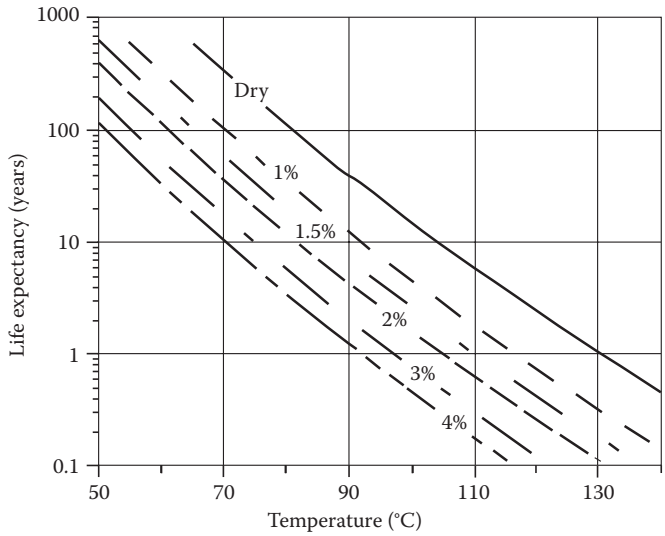

FIGURE 12.14 Aging acceleration due to moisture content of insulation in the winding.

Moisture acts as a catalyst to the aging process of cellulose as shown in Figure 12.14.[6] Water is also one of the primary by-products of the aging process. Due to the hygroscopic nature of the cellulose insulation, most of the water is absorbed into the paper. Moisture equilibrium charts are used to estimate the amount of water in the paper by measuring the water content of the oil. These can be very misleading because they are based on the assumption that the insulation system is in equilibrium.

Water in insulation will affect the dielectric strength of the insulation. Figure 12.15 gives a relationship between the dielectric strength of pressboard and the water content at various temperatures. At operating temperatures, the effect of moisture is even more pronounced. The water content will also affect the power factor of the insulation as can be seen in Figure 12.16. Power factor testing of transformers is a common test that will respond to the dryness of the insulation systems. Power factor levels of 0.5% or less are commonly used to verify adequately dried insulation systems.

One of the limits for loading a transformer beyond nameplate rating is the phenomenon of bubble formation. Depending on the temperature, pressure, and moisture content of the insulation, bubbles can be formed primarily due to the vaporization of the water (Figure 12.17).

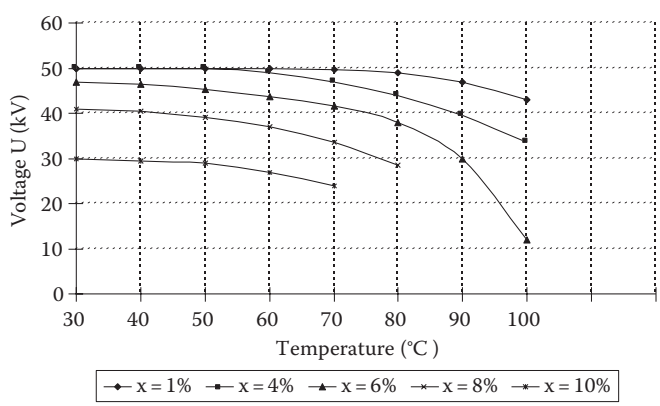

FIGURE 12.15 Influence of water content on the dielectric strength of pressboard in mineral oil.

www.EngineeringEbooksPdf.com

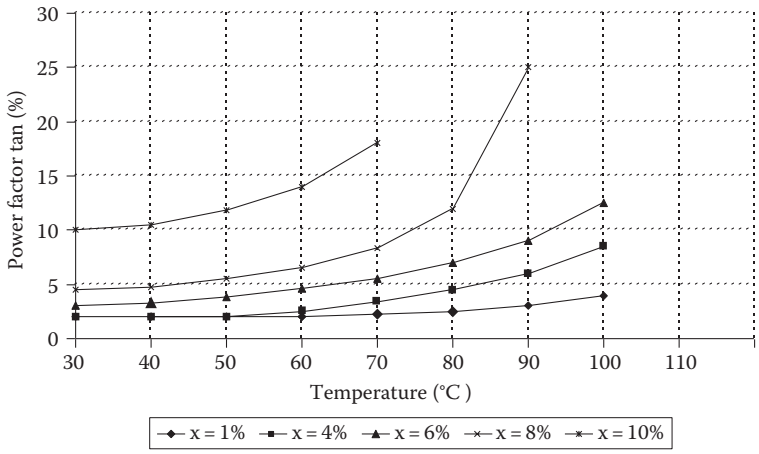

FIGURE 12.16 Influence of water content on the power factor of pressboard insulation in mineral oil.

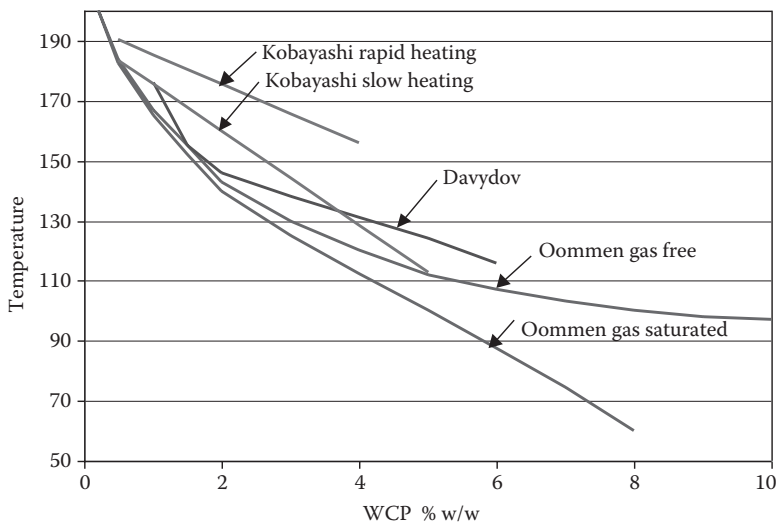

FIGURE 12.17 Critical temperature for bubble evolution.

There have been various studies which have investigated the phenomenon of bubble evolution in power transformers. Annex A in IEEE C57.91, *IEEE Guide for Loading Liquid-Immersed Transformers*, has a good description of the physical basis for bubble formation. This is being revised and updated with recent studies in the next revision of IEEE C57.91. Although the critical temperature curves may change with the results of recent investigations, the fundamental relationship that increased water content will lower the temperature at which bubbles are formed will not.

High moisture content has the largest impact on the performance of the insulation system. Transformers should be manufactured, depending on voltage class, to moisture levels below 0.5%. This moisture level will increase during the life of the transformer, resulting in an increase in the aging rate and the limiting of short-term overloading due to bubbling. Ideally the moisture level should be maintained below 1.0% in order to avoid these negative effects.

www.EngineeringEbooksPdf.com

12.5 Contamination

12.5.1 External

External sources of contamination can generally be minimized by maintaining a sealed system, but on some types of equipment (e.g., free-breathing devices), this is not possible. Examples of external sources of contamination are moisture, oxygen, and solid debris introduced during maintenance of the equipment or during oil processing.

12.5.2 Internal

Internal sources of contamination can be controlled only to a limited extent because these sources of contamination are generally chemical reactions (like the oxidation of cellulose and the oxidation of oil) that are constantly ongoing. They cannot be stopped, but their rates are determined by factors that are well understood and often controllable. Examples of these factors are temperature and the oxygen content of the system.

Internal sources of contamination are as follows:

- Nonmetallic particles such as cellulose particles from the paper and pressboard
- Metal particles from mechanical or electrical wear
- Moisture from the chemical degradation of cellulose (paper insulation and pressboard)
- Chemical degradation products of the oil that result from its oxidation (e.g., acids, aldehydes, ketones)

References

1. Sheppard, H.R., A century of progress in electrical insulation, *IEEE Electrical Insulation Magazine*, 2(5), September 1986, 20–30.
2. Oommen, T.V. and Prevost, T.A., Cellulose insulation in oil-filled power transformers: Part I—History and development, *IEEE Electrical Insulation Magazine*, 22(1), 31, January/February 2006.
3. Ford, A.J., Lockie, G.M., and Leonard, M.G., A new and improved heat-stabilized insulation, Conference paper 60-936, *Summer Meeting of the AIEE*, Atlantic City, NJ, June 22, 1960.
4. Moser, H.P., Transformer board, *Scientia Electrica*, 50–52, 1979.
5. Nelson, J.K., An assessment of the physical basis for the application of design criteria to dielectric structures, *Trans. IEEE*, EI-24, 835–847, 1989.
6. Lundgaard, L., Hanson, W., Linhjell, D., and Painter, T., Aging of oil-impregnated paper in power transformers, *IEEE Transactions on Power Delivery*, 19(1), 230–239, January 2004.

www.EngineeringEbooksPdf.com

www.EngineeringEbooksPdf.com

13

Electrical Bushings

13.1 Purpose of Electrical Bushings **13**-1
13.2 Types of Bushings **13**-2
According to Insulating Media on Ends • According to Construction • According to Insulation Inside Bushing
13.3 Bushing Standards **13**-7
13.4 Important Design Parameters **13**-8
Conductor Size and Material • Insulators • Flange • Oil Reservoir • Clamping System • Temperature Limits
13.5 Other Features of Bushings **13**-12
Voltage Taps • Bushing Current Transformer Pockets • Lower Support/Lower Terminal • Lower-End Shield
13.6 Bushings for Special Applications **13**-14
High-Altitude Applications • Highly Contaminated Environments • High-Current Bushings within Isolated-Phase Bus Ducts
13.7 Accessories Commonly Used with Bushings **13**-16
Bushing Potential Device • Upper Test Terminals • Draw-Lead Conductors
13.8 Tests on Bushings **13**-18
Categories of Tests • Dielectric Tests • Mechanical Tests • Thermal Tests
13.9 Maintenance and Troubleshooting **13**-22
Oil Level • Power-Factor/Capacitance Measurements • Damage or Contamination of Air-End Insulator • Improper Installation of Terminals • Misaligned or Broken Voltage Tap Connections • Dissolved-Gas-in-Oil Analysis
References **13**-24

Loren B. Wagenaar
WagenTrans Consulting, LLC

13.1 Purpose of Electrical Bushings

ANSI/IEEE Std. C57.19.00 [1] defines an electrical bushing as "an insulating structure, including a through conductor or providing a central passage for such a conductor, with provision for mounting a barrier, conducting or otherwise, for the purpose of insulating the conductor from the barrier and conducting current from one side of the barrier to the other." As a less formal explanation, the purpose of an electrical bushing is simply to transmit electrical power in or out of enclosures, i.e., barriers, of an electrical apparatus such as transformers, circuit breakers, shunt reactors, and power capacitors. The bushing conductor may take the form of a conductor built directly as a part of the bushing or, alternatively, as a separate conductor that is drawn through, usually through the center of, the bushing.

Since electrical power is the product of voltage and current, insulation in a bushing must be capable of withstanding the voltage at which it is applied, and its current-carrying conductor must be capable of carrying rated current without overheating the adjacent insulation. For practical reasons, bushings are

www.EngineeringEbooksPdf.com

not rated by the power transmitted through them; rather, they are rated by the maximum voltage and current for which they are designed.

13.2 Types of Bushings

There are many methods to classify the types of bushings. These classifications are based on practical reasons, which will become apparent in the following discussion in three broad areas. Bushings can be classified:

1. According to insulating media on ends
2. According to construction
3. According to insulation inside bushing

13.2.1 According to Insulating Media on Ends

One method is to designate the types of insulating media at the ends of the bushing. This classification depends primarily on the final application of the bushing.

An air-to-oil bushing has air insulation at one end of the bushing and oil insulation at the other. Since oil is more than twice as strong dielectrically as air at atmospheric pressure, the oil end is approximately half as long (or less) than the air end. This type of bushing is commonly used between atmospheric air and any oil-filled apparatus.

An air-to-air bushing has air insulation on both ends and is normally used in building applications where one end is exposed to outdoor atmospheric conditions and the other end is exposed to indoor conditions. The outer end may have higher creep distances to withstand higher-pollution environments, and it may also have higher strike distances to withstand transient voltages during adverse weather conditions such as rainstorms.

Special application bushings have limited usage and include: air-to-SF_6 bushings, usually used in SF_6-insulated circuit breakers; SF_6-to-oil bushings, used as transitions between SF_6 bus ducts and oil-filled apparatus; and oil-to-oil bushings, used between oil bus ducts and oil-filled apparatus.

13.2.2 According to Construction

There are basically two types of construction, the solid or bulk type and the capacitance-graded or condenser type.

13.2.2.1 Solid Bushing

The solid-type bushing, depicted in Figure 13.1, is typically made with a central conductor and porcelain or epoxy insulators at either end and is used primarily at the lower voltages through 25 kV. Generally, this construction is relatively simple compared with the capacitance-graded type. This was the construction method used for the original bushings, and its current usage is quite versatile with respect to size. Solid bushings are commonly used in applications ranging from small distribution transformers and circuit switchers to large generator step-up transformers (GSUT) and hydrogen-cooled power generators.

At the lower end of the applicable voltage range, the central conductor can be a small-diameter lead connected directly to the transformer winding, and such a lead typically passes through an arbitrarily shaped bore of an outer and inner porcelain or epoxy insulator(s). Between the two insulators there is typically a mounting flange for mounting the bushing to the transformer or other apparatus. In one unique design, only one porcelain insulator was used, and the flange was assembled onto the porcelain after the porcelain had been fired. At higher voltages, particularly at 25 kV, more care is taken to make certain that the lead and bore of the insulator(s) are circular and concentric, thus ensuring that the electric stresses in the gap between these two items are more predictable and uniform. For higher-current

www.EngineeringEbooksPdf.com

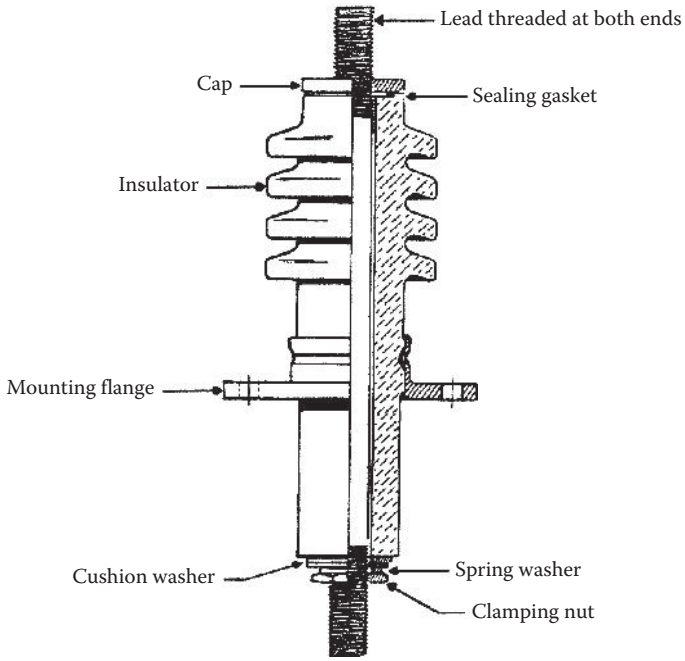

FIGURE 13.1 Solid-type bushing.

bushings, typically up to 20 kA, large-diameter circular copper leads or several copper bars arranged in a circle and brazed to copper end plates can be used.

The space between the lead and the insulator may consist of only air on lower-voltage solid-type bushings, or this space may be filled with electric-grade mineral oil or some other special compound on higher-voltage bushings. The oil may be self-contained within the bushing, or it may be oil from the apparatus in which the bushing is installed. Special compounds are typically self-contained. Oil and compounds are used for three reasons: First, they enable better cooling of the conductor than does air. Second, they have higher dielectric constants (about 2.2 for oil) than air, and therefore, when used with materials with higher dielectric constants, such as porcelain or epoxy, they endure a smaller share of the voltage than an equally sized gap occupied by air. The result is that oil and compounds withstand higher voltages than air alone. Third, oil and other compounds display higher breakdown strengths than air.

The primary limitation of the solid bushing is its ability to withstand 60 Hz voltages above 90 kV. Hence, its applications are limited to 25 kV equipment ratings, which have test voltages of 70 kV. Recent applications require low partial-discharge limits on the 25 kV terminals during transformer test and have caused further restrictions on the use of this type of bushing. In these cases, either a specially designed solid bushing, with unique grading shielding that enables low inherent partial-discharge levels, or a more expensive capacitance-graded bushing must be used.

13.2.2.2 Capacitance-Graded Bushings

Technical literature dating back to the early twentieth century describes the principles of the capacitance-graded bushing [2]. R. Nagel of Siemens published a German paper [3] in 1906 describing an analysis and general principles of condenser bushings, and A.B. Reynders of Westinghouse published a U.S. paper [4] that described the principles of the capacitance-graded bushing and compared the characteristics of these bushings with those of solid-type construction. Thereafter, several additional papers were published, including those by individuals from Micafil of Switzerland and ASEA of Sweden.

The value of the capacitance-graded bushing was quickly demonstrated, and this bushing type was produced extensively by those companies possessing the required patents. Currently, this construction is

www.EngineeringEbooksPdf.com

used for virtually all voltage ratings above 25 kV system voltage and has been used for bushings through 1500 kV system voltage. This construction uses conducting layers at predetermined radial intervals within oil-impregnated paper or some other insulation material that is located in the space between the central conductor and the insulator. Different manufacturers have used a variety of materials and methods for making capacitance-graded bushings. Early methods were to insert concentric porcelain cylinders with metalized surfaces or laminated pressboard tubes with embedded conductive layers. Later designs used conductive foils, typically aluminum or copper, in oil-impregnated kraft paper. An alternative method is to print semiconductive ink (different manufacturers have used different conductivities) on all or some of the oil-impregnated kraft-paper wraps.

Figure 13.2 shows the general construction of an oil-filled, capacitance-graded bushing. The principal elements are the central circular conductor, onto which the capacitance-graded core is wound; the top and lower insulators; the mounting flange; the oil and an oil-expansion cap; and the top and bottom terminals. Figure 13.3 is a representation of the equipotential lines in a simplified capacitance-graded bushing in which neither the expansion cap nor the sheds on either insulator are shown. The bold lines within the capacitance-graded core depict the voltage-grading elements. The contours of the equipotential lines show the influence of the grading elements, both radially within the core and axially along the length of the insulators.

The mathematical equation for the radial voltage distribution as a function of diameter between two concentric conducting cylinders is:

$$V(d) = \frac{V[\ln(D_2/d)]}{[\ln(D_2/D_1)]} \tag{13.1}$$

where

V is the voltage between the two cylinders

d is the position (diameter) at which the voltage is to be calculated

D_1 and D_2 are the diameters of the inner and outer cylinders, respectively

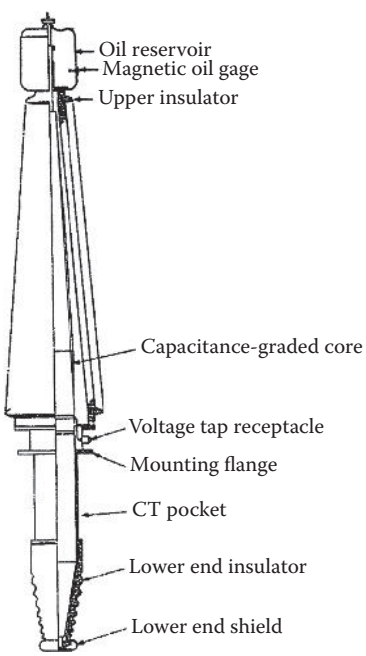

FIGURE 13.2 Oil-filled, capacitance-graded bushing.

www.EngineeringEbooksPdf.com

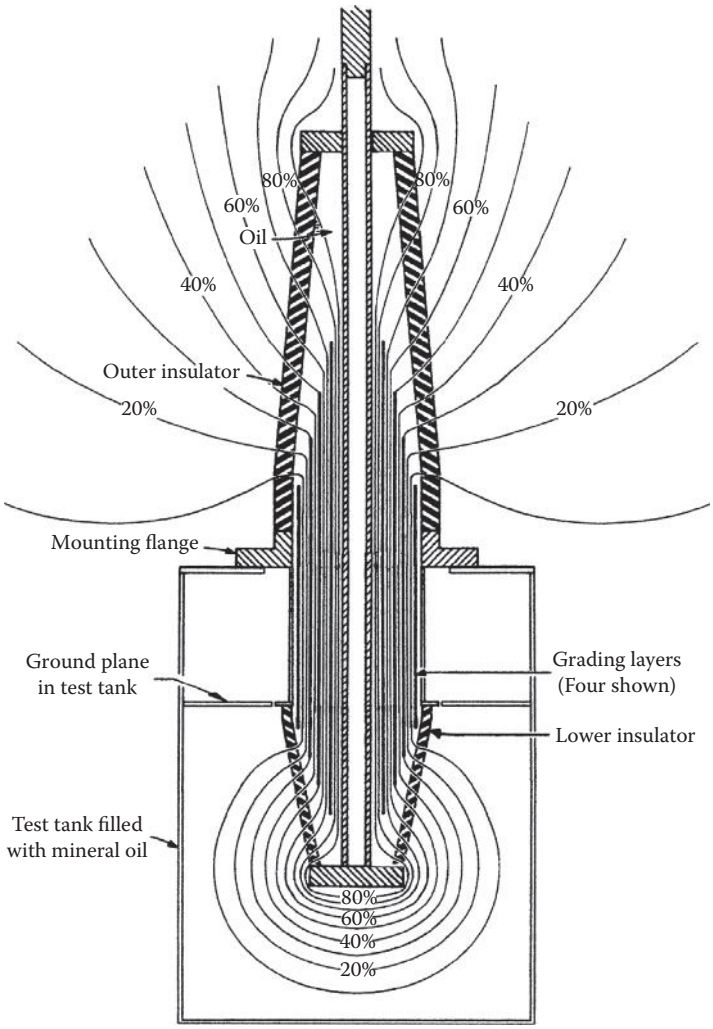

FIGURE 13.3 Exponential plot of oil-filled, capacitance-graded bushing.

Since this is a logarithmic function, the voltage is nonlinear, concentrating around the central conductor and decreasing near the outer cylinder. Likewise, the associated radial electric stress, calculated by

$$E(d) = \frac{2V}{[d \ln(D_2/D_1)]} \tag{13.2}$$

will be the greatest at $d = D_1$. The lengths of grading elements and the diameters at which they are positioned are such as to create a more uniform radial-voltage distribution than found in a solid-type bushing.

As seen from Figure 13.3, the axial voltage distribution along the inner and outer insulators is almost linear when the proper capacitance grading is employed. Thus both insulators on capacitance-graded bushings can be shorter than their solid-bushing counterparts.

Capacitance-graded bushings involve many more technical and manufacturing details than solid bushings and are therefore more expensive. These details include the insulation/conducting layer

www.EngineeringEbooksPdf.com

system, equipment to wind the capacitor core, and the oil to impregnate the paper insulation. However, it should be noted that the radial dimension required for the capacitance-graded bushing is much less than the solid construction, and this saves on material within the bushing as well in the apparatus in which the bushing is used. Also, from a practical standpoint, higher-voltage bushings could not possibly be manufactured with a solid construction.

13.2.3 According to Insulation Inside Bushing

Still another classification relates to the insulating material used inside the bushing. In general, these materials can be used in either the solid- or capacitance-graded construction, and in several types, more than one of these insulating materials can be used in conjunction. The following text gives a brief description of these types:

13.2.3.1 Air-Insulated Bushings

Air-insulated bushings generally are used only with air-insulated apparatus and are of the solid construction that employs air at atmospheric pressure between the conductor and the insulators.

13.2.3.2 Oil-Insulated or Oil-Filled Bushings

Oil-insulated or oil-filled bushings have electrical-grade mineral oil between the conductor and the insulators in solid-type bushings. This oil can be contained within the bushing, or it can be shared with the apparatus in which the bushing is used. Capacitance-graded bushings also use mineral oil, usually contained within the bushing, between the insulating material and the insulators for the purposes of impregnating the kraft paper and transferring heat from the conducting lead.

13.2.3.3 Oil-Impregnated Paper-Insulated Bushings

Oil-impregnated paper-insulated bushings use the dielectric synergy of mineral oil and electric grades of kraft paper to produce a composite material with superior dielectric-withstand characteristics. This material has been used extensively as the insulating material in capacitance-graded cores for approximately the last 50 years.

13.2.3.4 Resin-Bonded or Resin-Impregnated Paper-Insulated Bushings

Resin-bonded paper-insulated bushings use a resin-coated kraft paper to fabricate the capacitance-graded core, whereas resin-impregnated paper-insulated bushings use papers impregnated with resin, which are then used to fabricate the capacitance-graded core. The latter type of bushing has superior dielectric characteristics, comparable with oil-impregnated paper-insulated bushings.

13.2.3.5 Cast-Insulation Bushings

Cast-insulation bushings are constructed of a solid-cast material with or without an inorganic filler. These bushings can be either of the solid or capacitance-graded types, although the former type is more representative of present technology.

13.2.3.6 Gas-Insulated Bushings

Gas-insulated bushings [5] use pressurized gas, such as SF_6 gas, to insulate between the central conductor and the flange. The bushing shown in Figure 13.4 is one of the simpler designs and is typically used with circuit breakers. It uses the same pressurized gas as the circuit breaker, has no capacitance grading, and uses the dimensions and placement of the ground shield to control the electric fields. Other designs use a lower insulator to enclose the bushing, which permits the gas pressure to be different than within the circuit breaker. Still other designs use capacitance-graded cores made of plastic-film material that is compatible with SF_6 gas.

www.EngineeringEbooksPdf.com

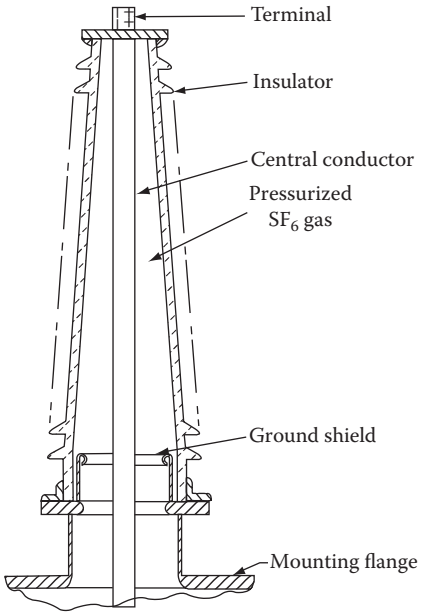

FIGURE 13.4 Pressurized SF_6 gas bushing.

13.3 Bushing Standards

Several bushing standards exist in the various countries around the world. The major standards have been established by the Transformers Committee within the IEEE Power Engineering Society and by IEC Committee 37. Five important standards established by these committees include the following:

1. ANSI/IEEE Std. C57.19.00, *Standard Performance Characteristics and Test Procedure for Outdoor Power Apparatus Bushings* [1]. This is the general standard that is widely used by countries in the Western Hemisphere and contains definitions, service conditions, ratings, general electrical and mechanical requirements, and detailed descriptions of routine and design test procedures for outdoor-power-apparatus bushings.
2. IEEE Std. C57.19.01, *Standard Performance Characteristics and Dimensions for Outdoor Power Apparatus Bushings* [6]. This standard lists the electrical-insulation and test-voltage requirements for power-apparatus bushings rated from 15 through 800 kV maximum system voltages. It also lists dimensions for standard-dimensioned bushings, cantilever-test requirements for bushings rated through 345 kV system voltage, and partial-discharge limits as well as limits for power factor and capacitance change from before to after the standard electrical tests.
3. IEEE Std. C57.19.03, *Standard Requirements, Terminology and Test Procedures for Bushings for DC Applications* [7]. This standard gives the same type of information as ANSI/IEEE Std. C57.19.00 for bushings for direct-current equipment, including oil-filled converter transformers and smoothing reactors. It also covers air-to-air dc bushings.
4. IEEE Std. C57.19.100, *Guide for Application of Power Apparatus Bushings* [8]. This guide recommends practices to be used (1) for thermal loading above nameplate rating for bushings applied on power transformers and circuit breakers and (2) for bushings connected to isolated-phase bus. It also recommends practices for allowable cantilever loading caused by the pull of the line connected to the bushing, applications for contaminated environments and high altitudes, and maintenance practices.
5. IEC Publication 137 [9], Bushings for Alternating Voltages above 1000 V. This standard is the IEC equivalent to the first standard listed above and is used widely in European and Asian countries.

www.EngineeringEbooksPdf.com

13.4 Important Design Parameters

13.4.1 Conductor Size and Material

The conductor diameter is determined primarily by the current rating. There are two factors at work here. First, the skin depth of copper material at 60 Hz is about 1.3 cm and that of aluminum is about 1.6 cm. This means that most of the current will flow in the region from the outer portion of the conductor and radially inward to a depth of the skin depth δ. Second, the losses generated within a conductor will be:

$$P_{loss} = I^2R = \frac{I^2\rho L}{A} = \frac{4I^2\rho L}{\pi(D_1^2 - D_0^2)} \tag{13.3}$$

where

I is the rated current
ρ is the resistivity of the conductor material, ohm · m
$\rho = 1.7241 \times 10^{-3}$ ohm · m for copper with 100% international annealed copper standard (IACS)
$\rho = 3.1347 \times 10^{-3}$ ohm · m for electrical aluminum alloy with 55% IACS
L is the length of conductor, m
A is the cross section of conductor = $\pi(D_1^2 - D_0^2)/4$
D_1 is the outside diameter of conductor, m
$D_0 = D_1 - \delta$, m
δ is the skin depth of the conductor in the case that a tubular conductor is used
$\delta \approx 0.0127$ m for copper, 0.0159 m for aluminum, both at 60 Hz frequency

It can be seen from Equation 13.3 that P_{loss} decreases as D_1 increases. Hence, design practice is to increase the outside diameter of the conductor for higher current ratings and to limit the wall thickness to near the skin depth. There are other technical advantages to increasing the outside conductor diameter: First, from Equation 13.2, observe that electric-field stress reduces as $d = D_1$ increases. Therefore, a larger diameter conductor will have higher partial-discharge inception and withstand voltages. Second, the mechanical strength of the conductor is dependent on the total cross-sectional area of the conductor, so that a larger diameter is sometimes used to achieve higher withstand forces in the conductor.

13.4.2 Insulators

Insulators must have sufficient length to withstand the steady-state and transient voltages that the bushing will experience. Adequate lengths depend on the insulating media in which the insulator is used and on whether the bushing is capacitively graded. In cases where there are two different insulating media on either side of an insulator, the medium with the inferior dielectric characteristics determines the length of the insulator.

13.4.2.1 Air Insulators

Primary factors that determine the required length of insulators used in air at atmospheric pressure are lightning-impulse voltage under dry conditions and power-frequency and switching-impulse voltages under wet conditions. Standard dry conditions are based on 760 mm (Hg) atmospheric pressure and 20°C, and wet conditions are discussed in Section 13.6.1.

Bushings are normally designed to be adequate for altitudes up to 1000 m. Beyond 1000 m, longer insulators must be used to accommodate the lower air density at higher altitudes. Under clean conditions, air insulators for capacitively graded bushings are normally shorter in length than insulator housings without grading elements within them. However, as the insulator becomes more contaminated, the effects of

www.EngineeringEbooksPdf.com

grading elements disappear, and the withstand characteristics of graded and nongraded insulators become the same over the long term (15–30 min) [10]. Further guidance on this subject is given in Section 13.6.2.

13.4.2.2 Oil Insulators

Since mineral oil is dielectrically stronger than air, the length of insulators immersed in oil is typically 30%–40% the length of air insulators. In equipment having oil with low contamination levels, no sheds are required on oil-immersed insulators. In situations where some contamination exists in the oil, such as carbon particles in oil-insulated circuit breakers, small ripples are generally cast on the outer insulator surface exposed to the oil.

13.4.2.3 Pressurized SF_6 Gas Insulators

Since various pressures can be used for this application, the length of the insulator can be equal to or less than an insulator immersed in oil. Since particles are harmful to the dielectric strength of any pressurized gas, precautions are generally taken to keep the SF_6 gas free of particles. In such cases, no sheds are required on the insulators.

13.4.3 Flange

The flange has two purposes: first, to mount the bushing to the apparatus on which it is utilized, and second, to contain the gaskets or other means of holding the insulators in place located on the extreme ends of the flange, as described in Section 13.4.5. Flange material can be cast aluminum for high-activity bushings, where the casting mold can be economically justified. In cases where production activities are not so high, flanges can be fabricated from steel or aluminum plate material. A further consideration for high-current bushings is that aluminum, or some other nonmagnetic material, is used in order to eliminate magnetic losses caused by currents induced in the flange by the central conductor.

13.4.4 Oil Reservoir

An oil reservoir, often called the expansion cap, is required on larger bushings with self-contained oil for at least one and often two related reasons: First, mineral oil expands and contracts with temperature, and the oil reservoir is required to contain the oil expansion at high oil temperatures. Second, oil-impregnated insulating paper must be totally submerged in oil in order to retain its insulating qualities. Hence, the reservoir must have sufficient oil in it to maintain oil over the insulating paper at the lowest anticipated temperatures. Since oil is an incompressible fluid, the reservoir must also contain a sufficient volume of gas, such as nitrogen, so that excessive pressures are not created within the bushing at high temperatures. Excessive pressures within a bushing can cause oil leakage.

On bushings for mounting at angles up to about 30° from vertical, the reservoir is mounted on the top end of the bushing. On smaller, lower-voltage bushings, the reservoir can be within the top end of the upper insulator. Oil-filled bushings that are horizontally mounted usually have an oil reservoir mounted on the flange, but some have bellows, either inside or outside the bushing, which expand and contract with the temperature of the oil.

For the purpose of checking the oil level in the bushing, an oil-level gauge is often incorporated into the reservoir. There are two basic types of oil gauges, the clear-glass type and the magnetic type. The former type is cast from colored or clear glass such that the oil level can be seen from any angle of rotation around the bushing. The second type is a two-piece gauge, the part inside the reservoir being a float attached to a magnet that rotates on an axis perpendicular to the reservoir wall. The part outside the reservoir is then a gauge dial attached to a magnet that follows the rotation of the magnet mounted inside the reservoir. This type of gauge suffers a disadvantage in that it can only be viewed at an angle of approximately 120° around the bushing. For this reason, bushings with this type of gauge are normally rotated on the apparatus such that the gauge can be seen from ground level.

www.EngineeringEbooksPdf.com

13.4.5 Clamping System

The clamping system used on bushings is very important because it provides the mechanical integrity of the bushing. A thorough discussion and excellent illustration of different types of clamping systems used for all insulators, including those used on bushings, is given in Section Q.2.2 of Appendix Q of the IEEE 693-1997, *Recommended Practice for Seismic Design of Substations* [11].

Two types of clamping systems are generally used on bushings, and a third type is used less frequently. The first, the mechanically clamped type, uses an external flange on the end of each insulator, and bolts are used to fasten them to mating parts, i.e., the mounting flange and the top and bottom terminals. A grading ring is often placed over this area on higher-voltage designs to shield the bolts from electric fields. The mechanically clamped type is economical and compact, but it has an increased potential for breakage due to stress concentration present at the bolted clamps.

The second type, the center-clamped type, involves the use of a compression-type spring assembly in the reservoir located at the top of the bushing, thereby placing the central conductor in tension when the spring assembly is released. This action simultaneously places the insulators, the flange and gaskets between these members, and the terminals at the extreme ends of the insulators in compression, thereby sealing the gaskets. The center-clamped type is also an economical, compact design, but it has the potential of oil leaks due to cantilever or seismic forces placed on the insulator. The capacitance-graded bushing shown in Figure 13.2 uses a center-clamped type of clamping system.

The third type, the cemented type, uses a metal flange to encircle of the ends of the insulator. A small radial gap is left between the outer diameter of the insulator and the inside diameter of the flange. This gap is filled with grout material rigid enough to transfer the compressive loads but pliable enough to prevent load concentrations on the porcelain. As with the mechanically clamped type, bolts are used to fasten them to mating parts, and grading rings are used at the higher voltages. This type of clamping system minimizes the potential for oil leakage or breakage due to mechanical stress concentrations, but the overall length of the insulator must be increased slightly in order to maintain electrical metal–metal clearances. The pressurized gas bushing shown in Figure 13.4 uses the cemented type of clamping system.

Whatever method is used for the clamping system, the clamping force must be adequate to withstand the cantilever forces that will be exerted on the ends of a bushing during its service life. The major mechanical force to which the top end of an outdoor bushing is subjected during service is the cantilever force applied to the top terminal by the line pull of the connecting lead. This force comprises the static force exerted during normal conditions plus the forces exerted due to wind loading and/or icing on the connecting lead. In addition, bushings mounted at an angle from vertical exert a force equivalent to a static cantilever force at the top of the bushing, and this force must be accounted for in the design.

In addition to the static forces, bushings must also withstand short-time dynamic forces created by short-circuit currents and seismic shocks. In particular, the lower end of bushings mounted in circuit breakers must also withstand the forces created by the interruption devices within the breaker.

Users can obtain guidance for allowable line pull from IEEE Std. C57.19.100-1995 [8], which recommends permissible loading levels. According to the standard, the static line loading should not exceed 50% of the test loading, as defined later in Section 13.8.3, and the short-time, dynamic loading should not exceed 85% of the same test loading.

13.4.6 Temperature Limits

Temperature limits within bushings depend on the type of bushing and the materials used in them. Solid-type bushings are made of only the central conductor, the porcelain or epoxy insulator(s), and the sealing gaskets. These bushings are therefore limited to the maximum allowable temperatures of the sealing gaskets and possibly the epoxy insulators, if used.

The kraft-paper insulation typically used to provide electrical insulation and mechanical support for the grading elements in a capacitance-graded bushing is severely limited by temperature. The maximum

www.EngineeringEbooksPdf.com

temperature that this paper can endure without accelerated loss of life is 105°C. Standards [1] have therefore established the following maximum temperatures for this type of bushing:

Temperature of immersion oil: 95°C average over a 24 h period, with a maximum of 105°C
Ambient air temperature: 40°C
Top terminal temperature: 70°C (30°C rise over ambient air)
Bushing hottest-spot temperature: 105°C

IEEE Guide C57.19.100 [8] gives a detailed procedure for establishing thermal constants for conductor hottest spot of bottom-connected bushings with no significant dielectric losses and no cooling ducts. After the tests have been performed, an estimate for the steady-state temperature rise at any current can be made with the following equation [12]:

$$\Delta\Theta_{HS} = k_1 I^n + k_2 \Delta\Theta_o \tag{13.4}$$

where
$\Delta\Theta_{HS}$ is the steady-state bushing hottest-spot rise over ambient air, °C
$\Delta\Theta_o$ is the steady-state immersion-oil rise over ambient air, i.e., transformer top-oil rise, °C
I is the per unit load current based on bushing rating
$k_2 = \Delta\Theta_{HS}/\Delta\Theta_o$, with both quantities being obtained by measurement when I = 0
$k_1 = \Delta\Theta_{HS} - k_2\Delta\Theta_o$, with both quantities being obtained by measurement when I = 1.0

$$n = \frac{\{\ln[\Delta\Theta_{HS}(I = X\,\text{p.u.}) - k_2\Delta\Theta_o(I = X\,\text{p.u.})]\}}{[k_1 \ln I(I = X\,\text{p.u.})]} \tag{13.5}$$

Typical values of k_1, k_2, and n generally range from 15 to 32, 0.6 to 0.8, and 1.6 to 2.0, respectively.

A transformer's top-oil temperature sometimes exceeds 95°C (55°C rise) at rated load. In such cases, the rating of the bushing must be derated such that the kraft-paper insulation does not exceed 105°C (65°C rise). The following equations can be used to establish a derating factor, based on the transformer's top-oil temperature, to be multiplied by the bushing's current rating in order to determine the maximum current rating for that particular application:

$$I_d = dI_r \tag{13.6}$$

where
I_d is the derated current at transformer top-oil temperature rise $\Delta\Theta_o$

$$d = \left[\frac{(65 - k_2\Delta\Theta_o)}{k_1}\right]^{1/n} \tag{13.7}$$

I_r is the rated current
$\Delta\Theta_o$ is the transformer top-oil rise, °C
Constants k_1, k_2, and n are as defined above

Note from Equation 13.7 that d = 1 when $\Delta\Theta_o$ = 55°C. This consequently leads to the following dependence between k_1 and k_2:

$$k_1 = 65 - 55k_2 \tag{13.8}$$

Figure 13.5 shows the bushing derating factors for transformer top-oil rises between 55°C and 65°C. The curves in Figure 13.5 are defined in Table 13.1.

www.EngineeringEbooksPdf.com

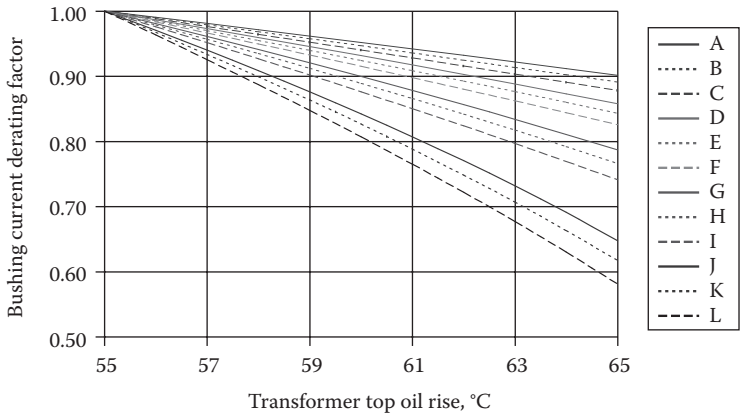

FIGURE 13.5 Bushing derating factors for transformer top-oil rises between 55°C and 65°C.

TABLE 13.1 Definition of Curves Depicted in Figure 13.5

Constants k_1 and k_2		Exponent, n		
k_1	k_2	1.6	1.8	2.0
15.5	0.9	L	K	J
21.0	0.8	I	H	G
26.5	0.7	F	E	D
32.0	0.6	C	B	A

13.5 Other Features of Bushings

13.5.1 Voltage Taps

It is possible within capacitance-graded bushings to create a capacitance divider arrangement wherein a small voltage, on the order of 5–10 kV, appears at the "voltage tap" when the bushing is operated at normal voltage. The voltage tap is created by attaching to one of the grading elements just to the inside of the grounded element. This tap is normally located in the flange, as shown in Figure 13.2 and in more detail as an example in Figure 13.6. Two sets of standard dimensions were used for voltage taps in the past, but modern bushings use only one set of standard dimensions [6]. The center conductor of the tap is grounded during normal operation unless voltage is required to power some measuring equipment.

The voltage tap can be used during the testing operation of the bushing and the apparatus into which it is installed, as well as during field operation. In the former application, it is used to perform power-factor and capacitance measurements on the bushing starting at the factory and throughout its life, as well as partial-discharge measurements within the bushing tested by itself or within the transformer. It is used during field operation to provide voltage to relays, which monitor phase voltages and instruct the circuit breakers to operate under certain conditions, in conjunction with the bushing potential device (BPD), discussed in Section 13.7.1.

13.5.2 Bushing Current Transformer Pockets

The bushing flange creates a very convenient site to locate bushing current transformers (BCTs). The flange is extended on its inner end, and the BCTs, having 500–5000 turns in the windings, are placed around the flange. This location is called the BCT pocket and is shown in Figure 13.2. In this

www.EngineeringEbooksPdf.com

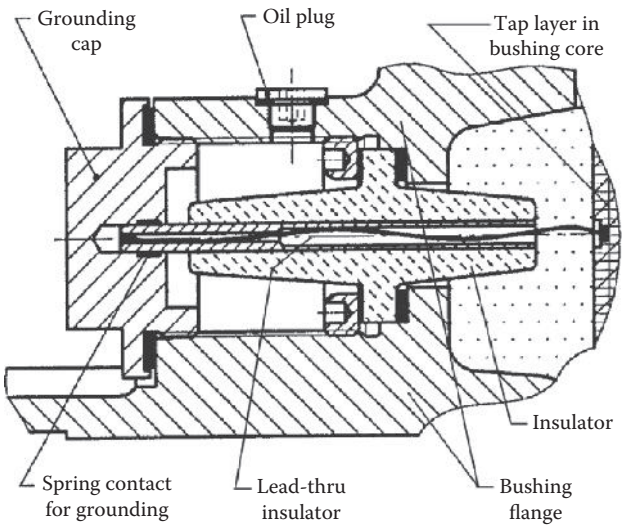

FIGURE 13.6 Voltage tap.

case, the bushing central conductor forms the single-turn primary of the BCT, and the turns in the windings form the secondary. Bushings built with standard dimensions have standard lengths for the BCT pocket [6].

13.5.3 Lower Support/Lower Terminal

Bushings that do not use draw-through leads, described in Section 13.7.3, must have a lower terminal in order to connect to the transformer winding or the circuit-breaker internal mechanism. This terminal can be one of any number of shapes, e.g., a smooth stud, threaded stud, spade, tang, or simply a flat surface with tapped holes for an additional terminal to be attached. Standards [6] prescribe several of these for various sizes of bushings.

One lower terminal specified by standards for bushings with voltage ratings 115 through 230 kV incorporates the lower-support function of the bushing with the lower terminal. The lower support is an integral part of the second type of clamping system (compression) described above, and in this function, it helps create the required forces for compressing the seals. The lower surface of the flat support has tapped holes in it so that the desired lower terminal can be attached. Two lower terminals specified by standards have a spherical radius of 102 mm (4.0 in.) machined into their bottom surfaces. This spherical radius enables the use of an additional lower terminal with a suitably shaped matching surface to be attached via the tapped holes, but at a small angle with the bottom of the bushing. This feature is useful for attaching rigid leads that are not always perfectly true with respect to the placement of the bushing, or when bushings are mounted at a small angle from vertical.

13.5.4 Lower-End Shield

It can be seen from Figure 13.3 that all regions of the lower end of air-to-oil bushings experience high dielectric stresses. In particular, the areas near the corners of the lower support and terminal are very highly stressed. Therefore, electrostatic shields with large radii, such as the one shown in Figures 13.2 and 13.7, are attached to the lower end of these bushings in order to reduce the electric fields that appear in this area. Shields also serve the purpose of shielding the bolted connections used to connect the leads to the bushing. Since shields with a thin dielectric barrier are somewhat stronger dielectrically, crepe paper is wrapped, or molded pressboard is placed on, the outer surfaces of the shield.

www.EngineeringEbooksPdf.com

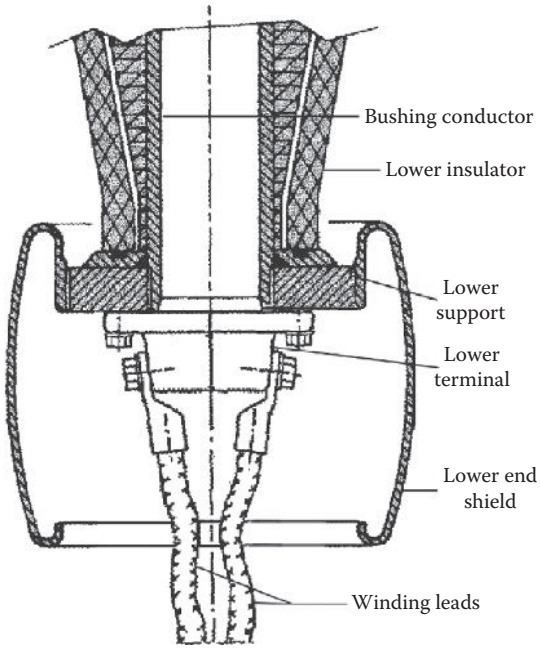

FIGURE 13.7 Lower-end shield.

13.6 Bushings for Special Applications

13.6.1 High-Altitude Applications

Bushings intended for application at altitudes higher than 1000 m suffer from lower air density along the outer insulator. Standards [1] specify that, when indicated, the minimum insulation necessary at the required altitude can be determined by dividing the standard insulation length at 1000 m by the correction factor given in Table 13.2. For instance, suppose that the required length of the air insulator on a bushing is 2.5 m at 1000 m altitude. Further, suppose that this bushing is to be applied at 3000 m. Hence, the air insulator must be at least 2.5/0.8 = 3.125 m in length. The air insulator on the bushing designed for 1000 m must be replaced with a 3.125 m long insulator, but the remainder of the bushing, i.e., the central core and the oil insulator, will remain the same as the standard bushing because these parts are not affected by air insulation. These rules do not apply to altitudes higher than 4500 m.

13.6.2 Highly Contaminated Environments

Insulators exposed to pollution must have adequate creep distance, measured along the external contour of the insulator, to withstand the detrimental insulating effects of contamination on the insulator surface. Figure 13.2 shows the undulations on the weather sheds, and additional creep distance is obtained by adding undulations or increasing their depth. Recommendations for creep distance [8] are shown in Table 13.3 according to four different classifications of contamination.

For example, a 345 kV bushing has a maximum line-to-ground voltage of 220 kV, so that the minimum creep is 220 × 28 = 6160 mm for a light contamination level and 220 × 44 = 9680 mm for a heavy contamination level. The term equivalent salt-density deposit (ESDD) used in Table 13.3 is the conductivity of the water-soluble deposits on the insulator surface. It is expressed in terms of the density of

www.EngineeringEbooksPdf.com

TABLE 13.2 Dielectric-Strength Correction Factors for Altitudes Greater Than 1000 m

Altitude, m	Altitude Correction Factor for Dielectric Strength
1000	1.00
1200	0.98
1500	0.95
1800	0.92
2100	0.89
2400	0.86
2700	0.83
3000	0.80
3600	0.75
4200	0.70
4500	0.67

Source: ANSI/IEEE, *Standard Performance Characteristics and Test Procedure for Outdoor Power Apparatus Bushings*, IEEE Std. C57.19.00-1991 (R1997), Institute of Electrical and Electronics Engineers, Piscataway, NJ, 1997. With permission.

TABLE 13.3 Recommended Creep Distances for Four Contamination Levels

Contamination Level	Equivalent Salt-Deposit Density (ESDD), mg/cm^2	Recommended Minimum Creep Distance, mm/kV
Light	0.03–0.08	28
Medium	0.08–0.25	35
Heavy	0.25–0.6	44
Extra heavy	Above 0.6	54

Source: IEEE, *Guide for Application of Power Apparatus Bushings*, IEEE Std. C57.19.100-1995 (R1997), Institute of Electrical and Electronics Engineers, Piscataway, NJ, 1997. With permission.

sodium chloride deposited on the insulator surface that will produce the same conductivity. Following are typical environments for the four contamination levels listed [8]:

1. Light-contamination areas include areas without industry and with low-density emission-producing residential heating systems, and areas with some industrial areas or residential density but with frequent winds and/or precipitation. These areas are not exposed to sea winds or located near the sea.
2. Medium-contamination areas include areas with industries not producing highly polluted smoke and/or with average density of emission-producing residential heating systems, areas with high industrial and/or residential density but subject to frequent winds and/or precipitation, and areas exposed to sea winds but not located near the sea coast.
3. Heavy-contamination areas include those areas with high industrial density and large city suburbs with high-density emission-producing residential heating systems, and areas close to the sea or exposed to strong sea winds.
4. Extra-heavy-contamination areas include those areas subject to industrial smoke producing thick, conductive deposits and small coastal areas exposed to very strong and polluting sea winds.

www.EngineeringEbooksPdf.com

13.6.3 High-Current Bushings within Isolated-Phase Bus Ducts

As already noted, there are applications where temperatures can exceed the thermal capabilities of kraft-paper insulation used within bushings. One such application is in high-current bushings that connect between GSUT and isolated-phase bus duct. Typically, forced air is used to cool the central conductors in the isolated-phase bus duct, air forced toward the GSUT in the two outer phases and returned at twice the speed in the center phase. Air temperatures at the outer ends of the bushings typically range from 80°C to 100°C, well above the standard limit of 40°C. This means that either a derating factor, sometimes quite severe, must be applied to the bushing's current rating, or materials with higher temperature limits must be used.

In older bushings, which were of the solid type, the only materials that were temperature limited were the gaskets, typically cork neoprene or nitrile. In this case, these gasket materials were changed to higher-temperature, oil-compatible fluorosilicon or fluorocarbon materials. However, solid-type bushings do not have low-partial-discharge characteristics. Therefore, as requirements for low-partial-discharge characteristics arose for GSUTs, a capacitance-grade core was used. As has already been explained, kraft-paper insulation is limited to 105°C, so that higher-temperature materials have been adapted for this purpose. This material is a synthetic insulation called aramid, i.e., Nomex®, and it has a limiting temperature in the order of 200°C. The material with the next-highest limiting temperature is the mineral oil, and to date, its temperature limits have been adequate for the high-temperature, high-current bushing application.

13.7 Accessories Commonly Used with Bushings

13.7.1 Bushing Potential Device

It is often desirable to obtain low-magnitude voltage and moderate wattage at power frequency for purposes of supplying voltage to synchroscopes, voltmeters, voltage-responsive relays, or other devices. This can be accomplished by connecting a BPD [13] to the voltage tap of a condenser-type bushing. Output voltages of a BPD are commonly in the 110–120 V range, or these values divided by 1.732, and output power typically ranges from about 25 W for 115 kV bushings to 200 W for 765 kV bushings.

A simple schematic of the BPD and bushing voltage tap is shown in Figure 13.8. The BPD typically consists of several components: a special fitting on the end of a shielded, weatherproof cable that fits into the voltage tap of the bushing; a padding capacitor that reduces the voltage seen by the BPD; a main transformer having an adjustable reactance; an adjustable-ratio auxiliary transformer; a tapped capacitor used to correct the power factor of the burden; a protective spark gap in case a transient voltage appears on the bushing; and a grounding switch that enables de-energization of the device. All items except the first are housed in a separate cabinet, typically mounted to the side of the transformer or circuit-breaker tank. Since the BPD is essentially a series-tuned device, output phase shift is sensitive to output frequency. The greatest phase shift is experienced when the BPD is loaded to its rating and system voltage is low relative to the bushing rating.

If the BPD is called upon to carry a burden beyond its capacity, the voltage appearing on the tap rises. If it rises enough, it will cause the protective gap to operate. This phenomenon is also a consequence of the series-resonant circuit in the BPD.

13.7.2 Upper Test Terminals

In order to perform periodic maintenance tests on bushings, transformers, and other electrical equipment, it is necessary to disconnect the line leads from the bushing terminals. This often requires the use of bucket trucks and/or lifting cranes to loosen the connections and lower the leads, particularly on the higher voltage ratings. This operation therefore requires several people and a substantial amount of time.

www.EngineeringEbooksPdf.com

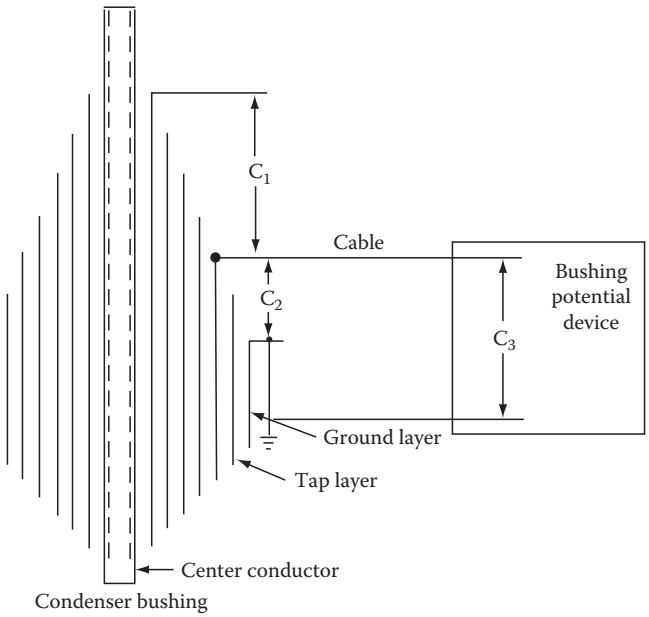

FIGURE 13.8 Bushing potential device.

A device known as the Lapp test terminal [14] is used to simplify this operation. This device, shown with the shunting bars opened and closed in Figure 13.9, is made of a short length of porcelain, mounting terminals on both ends, and some shunting bars that connect both terminals during normal operation. Its bottom terminal connects to the top terminal of the bushing, and the line leads are connected to its top terminal. When maintenance tests are required, one end of each shunt is loosened, and the shunts are swung away so that there is no connection from top to bottom. This enables the line to be isolated from the bushing without actually removing the line, and the testing on the transformer or other equipment can proceed, saving both time and manpower.

The bushing and outer-terminal design for the bushing must be adequate for the use of the Lapp test terminal. The outer terminal must be capable of withstanding the moment placed on the top of the test

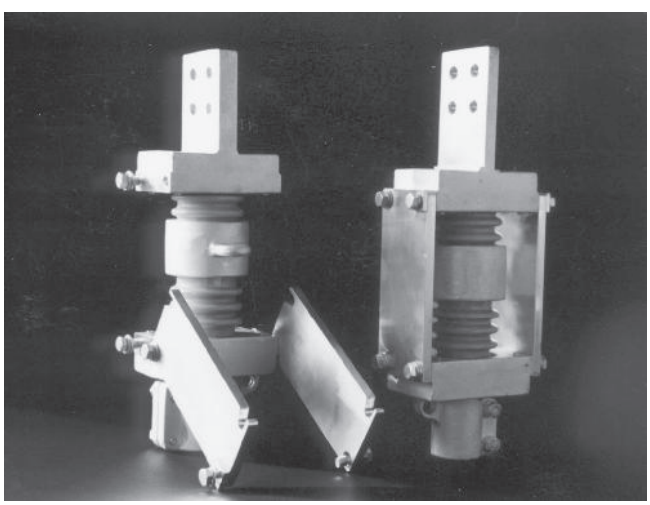

FIGURE 13.9 Lapp test terminal. (Photo courtesy of Lapp Insulator Company, Le Roy, NY.)

www.EngineeringEbooksPdf.com

TABLE 13.4 Current Ratings of Bushings Capable of Being Used with Draw-Leads

Nominal System Voltage, kV	Maximum Draw-Lead Current Rating, A	Bottom-Connected Current Rating, A	Minimum Diameter inside Tube, mm
34.5–69	400	1200	22
138–230	800	1200	41
345–765	800	1200	51

terminal without permanently bending the bushing's top terminal or upper part of the central conductor, and the bushing must be capable of withstanding the extra moment placed on it. The primary location of concern is at the bottom of the upper insulator, which can be lifted up off the sealing gasket, if one is used, and allow leakage of the internal insulating oil.

At higher voltages, excessive amounts of corona may occur due to the relatively sharp edges present on the top or both ends of the Lapp test terminal. Large-diameter corona rings are therefore placed over one or both ends of the terminal.

13.7.3 Draw-Lead Conductors

Normally, bushings have current ratings of 1200 A or higher. Some applications of bushings mounted in transformers with lower MVA ratings do not require these current-carrying capacities. In these cases, it is practical to run a smaller-diameter cable inside the hollow central tube in the bushing and connect it directly to the transformer winding. If the bushing must be removed for some reason, the transformer oil can be lowered, as necessary, to a level below the top of the transformer tank or turret. Then, the top of the draw-lead is unfastened from the top terminal of the bushing. The bushing can then be lifted out of the transformer and replaced with a new one, and the top terminal is reinstalled to the draw-lead. Finally, the oil can be adjusted to the proper level in the transformer. The use of a draw-lead therefore enables much faster replacement of bushings and eliminates the need for time-consuming processing of oil for the transformer.

Current-carrying capabilities of draw-leads are established by transformer manufacturers and are not standardized at this time. In general, the capability will increase with the cross-sectional area of the cable and decrease with the length of the cable. For these reasons, larger-sized holes are placed in the central tubes of bushings with higher voltage ratings. Table 13.4 gives the maximum current ratings of draw-lead applications, the current rating of the same bushing for bottom-connected applications, and the minimum hole size in the central conductor [6].

13.8 Tests on Bushings

13.8.1 Categories of Tests

Standards [1] designate three types of tests to be applied to bushings:

1. Design tests
2. Routine tests
3. Special tests

13.8.1.1 Design Tests

Design, or type, tests are only made on prototype bushings, i.e., the first of a design. The purpose of design tests is to ascertain that the bushing design is adequate to meet its assigned ratings, to ensure that the bushing can operate satisfactorily under usual or special service conditions, and to demonstrate compliance with industry standards. These tests need not be repeated unless the customer deems it necessary to have them performed on a routine basis.

www.EngineeringEbooksPdf.com

Test levels at which bushings are tested during design tests are higher than the levels encountered during normal service so as to establish margins that take into account dielectric aging of insulation as well as material and manufacturing variations in successive bushings. Bushings must withstand these tests without evidence of partial or full failure, and incipient damage that initiates during the dielectric tests is usually detected by comparing values of power factor, capacitance, and partial discharge before and after the testing program.

Standards [1] prescribe the following design tests:

Low-frequency wet-withstand voltage on bushings rated 242 kV maximum system voltage and less
Full-wave lightning-impulse-withstand voltage
Chopped-wave lightning-impulse-withstand voltage
Wet-switching-impulse-withstand voltage on bushings rated 345 kV maximum system voltage and greater
Draw-lead bushing-cap pressure test
Cantilever-withstand test
Temperature test at rated current

13.8.1.2 Routine Tests

Routine, or production, tests are made on every bushing produced, and their purpose is to check the quality of the workmanship and the materials used in the manufacture. Standards [1] prescribe the following routine tests:

Capacitance and power-factor measurements at 10 kV
Low-frequency dry-withstand test with partial-discharge measurements
Tap-withstand voltage test
Internal hydraulic pressure test

13.8.1.3 Special Tests

Special tests are for establishing the characteristics of a design practice and are not part of routine or design tests. The only special test currently included in standards [1] is the thermal-stability test, only applicable to extra high voltage (EHV) bushings, but other tests could be added in the future. These include short-time, short-circuit withstand and seismic capabilities.

13.8.2 Dielectric Tests

13.8.2.1 Low-Frequency Tests

There are two low-frequency tests:

1. Low-frequency wet-withstand voltage test
2. Low-frequency dry-withstand voltage test

13.8.2.1.1 Low-Frequency Wet-Withstand Voltage Test

The low-frequency wet-withstand voltage test is applied on bushings rated 242 kV and below while a waterfall at a particular precipitation rate and conductivity is applied. The values of precipitation rate, water resistivity, and the time of application vary in different countries. American standard practice is a precipitation rate of 5 mm/min, a resistivity of 178 ohm m, and a test duration of 10 s, whereas European practice is 3 mm/min, 100 ohm · m, and 60 s, respectively [15]. If the bushing flashes over externally during the test, it is allowed that the test be applied one additional time. If this attempt also flashes over, then the test fails and something must be done to modify the bushing design or test setup so that the capability can be established.

www.EngineeringEbooksPdf.com

13.8.2.1.2 Low-Frequency Dry-Withstand Voltage Test

The low-frequency dry-withstand test was, until recently, made for a 1 min duration without the aid of partial-discharge measurements to detect incipient failures, but standards [1] currently specify a 1 h duration for the design test, in addition to partial-discharge measurements. The present test procedure is:

Partial discharge (either radio-influence voltage or apparent charge) shall be measured at 1.5 times the maximum line-ground voltage. Maximum limits for partial discharge vary for different bushing constructions and range from 10 to 100 μV or pC.

A 1 min test at the dry-withstand level, approximately 1.7 times the maximum line-ground voltage, is applied. If an external flashover occurs, it is allowed to make another attempt, but if this one also fails, the bushing fails the test. No partial-discharge tests are required for this test.

Partial-discharge measurements are repeated every 5 min during the 1 h test duration at 1.5 times maximum line-ground voltage required for the design test. Routine tests specify only a measurement of partial discharge at 1.5 times maximum line-ground voltage, after which the test is considered complete.

Bushing standards were changed in the early 1990s to align with the transformer practice, which started to use the 1 h test with partial-discharge measurements in the late 1970s. Experience with this new approach has been good in that incipient failures were uncovered in the factory test laboratory, rather than in service, and it was decided to add this procedure to the bushing test procedure. Also from a more practical standpoint, bushings are applied to every transformer, and transformer manufacturers require that these tests be applied to the bushings prior to application so as to reduce the number of bushing failures during the transformer tests.

13.8.2.2 Wet-Switching-Impulse-Withstand Voltage

This test is required on bushings rated for 345 kV systems and above. The test waveshape is 250 μs time-to-crest and 2500 μs time-to-half-value with tolerance of ±30% on the time to crest and ±20% on the time-to-half-value. This is the standard waveshape for testing insulation systems without magnetic-core steel present in the test object and is different than the waveshape for transformers.

Three different standard test procedures are commonly used to establish the wet-switching-impulse-withstand voltage of the external insulation:

Fifteen impulses of each polarity are applied, with no more than two flashovers allowed.

Three impulses of each polarity are applied. If a flashover occurs, then it is permitted to apply three additional impulses. If no flashovers occur at either polarity, then the bushing passes the test. Otherwise, the bushing fails the test.

The 90% (1.3 σ) level is established from the 50% flashover tests.

13.8.2.3 Lightning-Impulse Tests

The same waveshapes are used to establish the lightning-impulse capability of bushings and transformers. The waveshape for the full wave is 1.2 μs for the wavefront and 50 μs for the time-to-half-value, and the chopped wave flashes over at a minimum of 3.0 μs. One of the same procedures as described above for the wet-switching-impulse tests is followed to establish the full-wave capability for both polarities. The chopped-wave capability is established by applying a minimum of three chopped impulses at each polarity.

13.8.3 Mechanical Tests

IEEE Std. C57.19.01 [6] specifies the static-cantilever-withstand forces to be applied separately to the top and bottom ends of outdoor-apparatus bushings. The forces applied to the top end range from 68 kg (150 lb) for the smaller, lower-voltage bushings to 545 kg (1200 lb) for the larger, higher-voltage or current bushings, and the forces applied to the lower end are generally about twice the top-end forces.

The test procedure is to apply the specified forces perpendicular to the bushing axis, first at one end then at the other, each application of force lasting 1 min. Permanent deflection, measured at the bottom

www.EngineeringEbooksPdf.com

end, shall not exceed 0.76 mm, and there shall be no oil leakage at either end at any time during the test or within 10 min after removing the force.

13.8.4 Thermal Tests

There are two thermal tests. The first is the thermal test at rated current, and it is applied to all bushing designs. The second test is the thermal-stability test [11], and it is applied for only EHV bushings.

13.8.4.1 Thermal Test at Rated Current

This test demonstrates a bottom-connected bushing's ability to carry rated current. The bushing is first equipped with a sufficient number of thermocouples, usually placed inside the inner diameter of the hollow-tube conductor, to measure the hottest-spot temperature of the conductor. The bushing is then placed in an oil-filled tank, the oil is heated to a temperature rise above ambient air of 55°C for transformers and 40°C for circuit breakers, and rated current is passed through the central conductor until thermal equilibrium is reached. The bushing passes the test if the hottest-spot temperature rise above ambient air does not exceed 65°C.

13.8.4.2 Thermal-Stability Test

Capacitive leakage currents in the insulating material within bushings cause dielectric losses [16]. Dielectric losses within a bushing can be calculated by the following equation using data directly from the nameplate or test report:

$$P_d = 2\pi f C V^2 \tan\delta \tag{13.9}$$

where

P_d is the dielectric losses, W
f is the applied frequency, Hz
C is the capacitance of bushing (C_1), F
V is the operating voltage, rms V
tan δ is the dissipation factor, p.u.

A bushing operating at rated voltage and current generates both ohmic and dielectric losses within the conductor and insulation, respectively. Since these losses, which both appear in the form of heat, are generated at different locations within the bushing, they are not directly additive. However, heat generated in the conductor influences the quantity of heat that escapes from within the core. A significant amount of heat generated in the conductor will raise the conductor temperature and prevent losses from escaping from the inner surface of the core. This causes the dielectric losses to escape from only the outer surface of the core, consequently raising the hottest-spot temperature within the core. Most insulating materials display an increasing dissipation factor, tan δ, with higher temperatures, such that as the temperature rises, tan δ also rises, which in turn raises the temperature even more. If this cycle does not stabilize, then tan δ increases rapidly, and total failure of the insulation system ensues.

Bushing failures due to thermal instability have occurred both on the test floor and in service. One of the classic symptoms of a thermal-stability failure is the high internal pressure caused by the gases generated from the deteriorating insulation. These high pressures cause an insulator, usually the outer one because of its larger size, either to lift off the flange or to explode. If the latter event occurs with a porcelain insulator, shards of porcelain saturated with oil become flaming projectiles, endangering the lives of personnel and causing damage to nearby substation equipment.

Note from Equation 13.9 that the operating voltage, V, particularly influences the losses generated within the insulating material. It has been found from testing experience that thermal stability only becomes a factor at operating voltages 500 kV and above.

www.EngineeringEbooksPdf.com

The test procedure given in ANSI/IEEE Std. C57.19.00-1991 [1] is to first immerse the lower end of the bushing in oil at a temperature of 95°C and then pass rated current through the bushing. When the bushing comes to thermal equilibrium, a test voltage equal to 1.2 times the maximum line-ground voltage is applied, and tan δ is measured at regular, normally hourly, intervals. These conditions are maintained until tan δ rises no more than 0.02% (0.0002 p.u.) over a period of 5 h. The bushing is considered to have passed the test if it has reached thermal stability at this time and it withstands all of the routine dielectric tests without significant change from the previous results.

13.9 Maintenance and Troubleshooting

Once a bushing has been successfully installed in the apparatus, without breakage or other damage, it will normally continue to operate without problems for as long as its parent apparatus is in service unless it is thermally, mechanically, or electrically overloaded. However, such overloads do occur, plus some designs have design flaws, and bushings can sustain incipient damage during shipment or installation. All of these potential problems must be watched by periodic inspections and maintenance. The type and frequency of inspection and maintenance performed on bushings depend on the type of bushing plus the relative importance and cost of the apparatus in which the bushing is installed. The following gives a brief description of some common problems and maintenance that should be performed [8,17,18]:

13.9.1 Oil Level

Proper oil level is very important in the operation of a bushing, and abnormal change in oil level can indicate problems within the bushing. Loss of oil can indicate that the bushing has developed a leak, possibly through a gasket, a soldered or welded seal, or an insulator that has been cracked or broken. A leak on the air-end side may be an indication that water has entered the bushing, and the water content and dielectric properties of the bushing oil should be checked as soon as possible to determine whether this has occurred. Excessive water can cause deterioration of the dielectric integrity along the inside of the insulators, particularly the oil-end insulator and, if used, the bushing core. Furthermore, excessive loss of oil in a capacitance-graded bushing can cause oil level to drop below the top of the core. Over time, this will cause the insulating paper to become unimpregnated, and the bushing can suffer dielectric failure, possibly an explosive one.

An abnormal increase in oil level on a bushing installed in a transformer with a conservator oil-preservation system may indicate a leak in an oil-end gasket or seal, or the oil-end insulator may be cracked or broken.

13.9.2 Power-Factor/Capacitance Measurements

Two methods are used to make power (dissipation) factor and capacitance measurements [17,18]. The first is the grounded specimen test (GST), where current, watts, and capacitance of all leakage paths between the energized central conductor and all grounded parts are measured. Measurements include the internal core insulation and oil as well as leakage paths over the insulator surfaces. The use of a guard-circuit connection can be used to minimize the effects of the latter.

The second method is the ungrounded specimen test (UST), where the above quantities are measured between the energized center conductor and a designated ungrounded test electrode, usually the voltage or test tap. The two advantages of the UST method are that the effects of unwanted leakage paths, for instance across the insulators, are minimized, and separate tests are possible while bushings are mounted in apparatus.

Standards [8] recommend that power factor and capacitance measurements be made at the time of installation, a year after installation, and every 3–5 years thereafter. A significant increase in a bushing's power factor indicates deterioration of some part of the insulating system. It may mean that one of the

www.EngineeringEbooksPdf.com

insulators, most likely the air-end insulator, is dirty or wet, and excessive leakage currents are flowing along the insulator. A proper reading can be obtained by cleaning the insulator. On the other hand, a significant increase of the power factor may also indicate deterioration within the bushing. An increase in the power factor across the C_1 portion, i.e., from conductor to tap, typically indicates deterioration within the core. An increase across the C_2 portion of a bushing using a core, i.e., from tap to flange, typically indicates deterioration of that part of the core or the bushing oil. If power factor doubles from the reading immediately after initial installation, the rate of change of the increase should be monitored at more frequent intervals. If it triples, then the bushing should be removed from service [8].

An increase of bushing capacitance is also a very important indicator that something is wrong inside the bushing. An excessive change, on the order of 2%–5%, depending on the voltage class of the bushing, over its initial reading probably indicates that insulation between two or more grading elements has shorted out. Such a change in capacitance is indication that the bushing should be removed from service as soon as possible.

13.9.3 Damage or Contamination of Air-End Insulator

Insulators, particularly those that are porcelain, are susceptible to damage during handling, shipping, or from flying parts of other failed equipment. Chips can be broken out of the sheds, and these can generally be repaired by grinding off the rough edges with a file and painting over the break with a suitable paint. In some cases, a composite material can be used to fill the void caused by the break [17]. On the other hand, some damage may extend into the body of the insulator. These areas should be watched closely for oil leakage for a period after the damage is noticed, since the impact may have cause the insulator to crack.

Bushings used in highly polluted environments should be washed periodically. Washing involves either de-energizing the apparatus and cleaning the insulators by hand with a cleaning agent or using a suitable jet of low-conductivity water while energized [17].

13.9.4 Improper Installation of Terminals

Improper installation of either the top or bottom terminals can cause thermal problems. A common problem with threaded terminals is that force of some kind must be placed on the mating threads so that a good current path is formed; in the absence of such force on the joint, the terminal is not suitable for carrying large currents. These problems can be found by using thermography methods [17].

Some manufacturers require that threaded terminals be torqued to a certain minimum value. Another method commonly used is to cut the member with the female threads in half. Then, it is first threaded onto the bushing top terminal and finally clamped such that it compresses onto the male threads of the top terminal.

13.9.5 Misaligned or Broken Voltage Tap Connections

In some cases, usually during rough shipment of bushings, the core will rotate within the insulators. This can cause the connection to the tap layer to break. In some older bushings, a spring connection was used to make the tap connection, and this connection sometimes shifted during handling or shipment. Both of these problems cause the tap to become inoperative, and the power-factor/capacitance measurements involving the tap cannot be made.

13.9.6 Dissolved-Gas-in-Oil Analysis

It is not recommended that dissolved-gas-in-oil analysis (DGA) samples be made on a routine basis because bushings have only a limited supply of oil, and the oil will have to be replenished after several such oil samples have been taken. However, if power-factor/capacitance measurements indicate that

www.EngineeringEbooksPdf.com

something is wrong with the bushing, DGA samples are indicated. Large amounts of CO and CO_2 gases indicate deterioration of paper insulation within the bushing, whereas other DGA gases indicate by-products of arcing or thermal overheating, just as they do in transformer insulation.

References

1. ANSI/IEEE, *Standard Performance Characteristics and Test Procedure for Outdoor Power Apparatus Bushings*, IEEE Std. C57.19.00-1991 (R1997), Institute of Electrical and Electronics Engineers, Piscataway, NJ, 1997.
2. Easley, J.K. and Stockum, F.R., Bushings, IEEE tutorial on transformers, IEEE EH0209-7/84/0000-0032, Institute of Electrical and Electronics Engineers, Piscataway, NJ, 1983.
3. Nagel, R., Uber Eine Neuerung An Hochspannungstransformer Der Siemens-Schuckertwerke, *Elektrische Bahnen Betriebe*, 4, 275–278, May 23, 1906.
4. Reynders, A.B., Condenser type of insulation for high-tension terminals, *AIEE Trans*., 23(Part I), 209, 1909.
5. Spindle, H.E., Evaluation, design and development of a 1200 kV prototype termination, USDOE Report DOE/ET/29068-T8 (DE86005473), U.S. Department of Energy, Washington, DC.
6. IEEE, *Standard Performance Characteristics and Dimensions for Outdoor Power Apparatus Bushings*, IEEE Std. C57.19.01-2000, Institute of Electrical and Electronics Engineers, Piscataway, NJ, 2000.
7. IEEE, *Standard Requirements, Terminology and Test Procedures for Bushings for DC Applications*, IEEE Std. C57.19.03-1996, Institute of Electrical and Electronics Engineers, Piscataway, NJ, 1996.
8. IEEE, *Guide for Application of Power Apparatus Bushings*, IEEE Std. C57.19.100-1995 (R1997), Institute of Electrical and Electronics Engineers, Piscataway, NJ, 1997.
9. IEC, Bushings for alternating voltages above 1000 V, IEC 137, International Electrotechnical Commission, Geneva, Switzerland, 1995.
10. Ueda, M., Honda, M., Hosokawa, M., Takahashi, K., and Naito, K., Performance of contaminated bushing of UHV transmission systems, *IEEE Trans*., PAS-104, 891–899, 1985.
11. IEEE, *Recommended Practice for Seismic Design of Substations*, IEEE Std. 693-1997, Institute of Electrical and Electronics Engineers, Piscataway, NJ, 1997.
12. McNutt, W.J. and Easley, J.K., Mathematical modeling—A basis for bushing loading guides, *IEEE Trans*., PAS-97, 2395–2404, 1978.
13. ABB, Inc., Instructions for bushing potential device type PBA2, Instruction leaflet IB 33-357-1F, ABB, Inc., Alamo, TN, September 1993.
14. Lapp Insulator Co., Extend substation equipment life with lapp-doble test terminal, Bulletin 600, Lapp Insulator Co., Le Roy, NY, 2000.
15. IEEE, *Standard Techniques for High Voltage Testing*, IEEE Std. 4–1995, Institute of Electrical and Electronics Engineers, Piscataway, NJ, 1995.
16. Wagenaar, L.B., The significance to thermal stability tests in EHV bushings and current transformers, Paper 4–6, presented at *1994 Doble Conference*, Boston, MA.
17. EPRI, Guidelines for the life extension of substations, EPRI TR-105070-R1CD, Electric Power Research Institute, Palo Alto, CA, November 2002.
18. Doble Engineering Co., AC dielectric-loss, power factor and capacitance measurements as applied to insulation systems of high voltage power apparatus in the field (a review), Part I, Dielectric theory, and Part II, Practical application, Report ACDL-I and II-291, Doble Engineering Co., Boston, MA, February 1991.

www.EngineeringEbooksPdf.com

14

Tap Changers and Smart Intelligent Controls

14.1 Introduction **14**-2
14.2 De-Energized Tap Changers **14**-3
Design of De-Energized Tap Changers • Type of Tap Connections of De-Energized Tap Changers
14.3 Switching Principle of Load Tap Changers **14**-7
14.4 Design Concepts of Today's Load Tap Changers **14**-8
Oil-Type Load Tap Changers • Vacuum-Type Load Tap Changers • Tap Position Indication
14.5 Applications of Load Tap Changers **14**-21
Basic Arrangements of Regulating Transformers • Examples of Commonly Used Winding Arrangements
14.6 HVDC-Transformers **14**-24
14.7 Phase-Shifting Transformers **14**-26
14.8 Rated Characteristics and Requirements for Load Tap Changers **14**-27
14.9 Selection of Load Tap Changers **14**-30
General Selection Criteria • Voltage Connection of Tap Winding during Change-Over Operation • Effects of the Leakage Inductance of Coarse Winding/Tap Winding during the Operation of the Diverter Switch (Arcing Switch) When Passing the Mid-Position of the Resistor-Type Load Tap Changer
14.10 Tap Changers Not Immersed in Mineral Oil **14**-33
14.11 Protection Devices for Load Tap Changers **14**-34
14.12 Maintenance of Load Tap Changers **14**-36
14.13 Refurbishment and Replacement of Load Tap Changers **14**-37
14.14 Smart State-of-the-Art Regulating Unit for LTCs **14**-38
Communication Technology • Distributed Functions • Synchronization • Tests • Basic Communication Structure: Mode Description • Device Parameter Configuration • Definition of General Precondition • Data Requirements for IEC 61850 Automatic Voltage Regulating Relay—Interfaces
14.15 Advanced Method for the Operation of LTC Controls of Transformers in Parallel **14**-42
14.16 Parallel Operation of Transformers with Automatic Detection of Switchgear System Topology **14**-44
14.17 Summary **14**-47
References **14**-48

Dieter Dohnal
Maschinenfabrik Reinhausen GmbH

Axel Kraemer
Maschinenfabrik Reinhausen GmbH

Karsten Viereck
Maschinenfabrik Reinhausen GmbH

www.EngineeringEbooksPdf.com

The common method of controlling the voltage level of transformers is to equip the transformer with tappings in the winding. The voltage variation will be achieved by changing the turn ratio. The tap changer changes the ratio of a transformer by adding turns to or subtracting turns from either the primary or the secondary winding. Therefore, the transformer is equipped with a so-called regulating or tap winding that is connected to the tap changer. The execution of a tap-change operation with a tap changer can be done with the transformer de-energized, when tap-changing is required rare, or it can be done with the transformer energized that means on-load. For these different demands, de-energized tap changers or on-load tap changers are used, controlled by intelligent regulating devices.

Today, both the IEEE term "load tap changer (LTC)" and the IEC term "on-load tap changer (OLTC)" as well as the term "de-energized tap changer (DETC)" and the IEC term "off-circuit tap changer (OCTC)"are in the terminology of international standards, but the terms "load tap changer (LTC)" and "de-energized tap changer (DETC)" are used primarily in this chapter. Tap changers are one of the indispensable components for the regulation of power transformers used in electrical energy networks and industrial application. This contribution explains the technological developments of DETCs, resistor-type LTCs as well as of reactor-type LTCs. The general switching principles for LTCs are discussed, and applications of LTCs are introduced. Today's design concepts of LTCs are described including the new generation of vacuum-type LTCs. The vacuum switching technology—used in LTCs—is the "state-of-the-art" design at the present time and for the foreseeable future. Examples of LTC designs and the associated switching principles show the variety of the use of vacuum interrupters. Advanced smart control technologies are presented for single transformer control as well as paralleling of transformers.

14.1 Introduction

For many decades, power transformers equipped with tap changers have been the main components of electrical networks and industry. Contrary to DETCs, the LTC allows voltage regulation and/or phase shifting by varying the transformer ratio under load without interruption.

From the beginning of LTC development, two switching principles have been used for the load-transfer operation, the high-speed-resistor-type and the reactor-type. Over the decades, both principles have been developed into reliable transformer components available in a broad range of current and voltage applications to cover the needs of today's network and industrial-process transformers as well as ensuring optimum system and process control (Goosen, 1996).

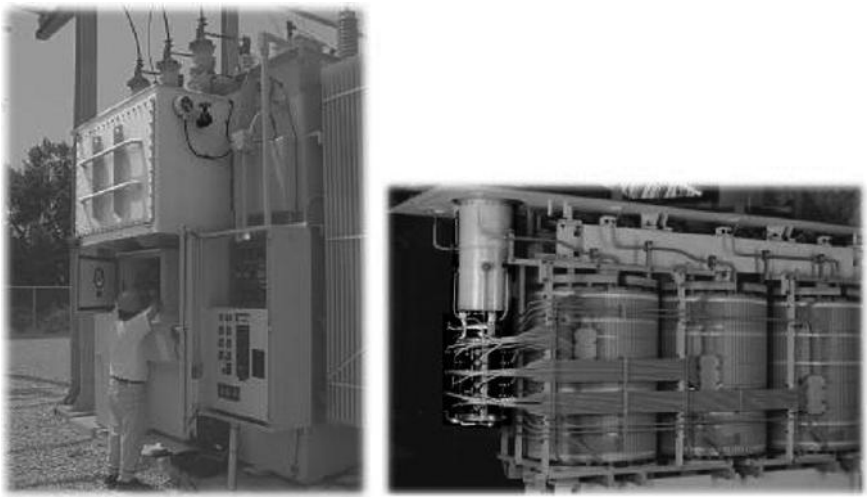

FIGURE 14.1 General LTC designs.

www.EngineeringEbooksPdf.com

It has to be noted here that the variation of voltage ratio by tap windings is directly connected to variation of the transformer impedance. Variable tap positions result in different ampere-turn distributions or in different volts-per-turn. Both effects are causing impedance variations in the transformer, and the characteristic is dependent on the design.

The majority of resistor-type LTCs and the DETCs are installed inside the transformer tank (in-tank tap changer), whereas the reactor-type LTCs are in a separate compartment, which is normally welded to the transformer tank (Figure 14.1).

This contribution mainly refers to tap changer immersed in transformer mineral oil. The use of other insulating liquids or gas insulation requires the approval of the manufacturer of the tap changer and may lead to a different tap changer design as shown in Section 14.4.2.2, for example. The history and wide range of tap changer controls and monitoring devices are explained in Chapters 17 and 23. In this contribution (Sections 14.13 through 14.15), advanced smart control technologies including today's standards of communication are given.

14.2 De-Energized Tap Changers

De-energized tap-changing is mainly used when the variation in the nominal operating voltage which requires a tap changer operation is not expected frequently. This mode of tap-changing is chosen, for example, to allow the application of one transformer layout at different points of a network with slight differences in the needed voltage ratio. A further area of application are transformers designed for developing networks, which might be subject to long-term system changes. All these requirements can also be fulfilled by the use of connecting links; however, the use of a DETC is quite more comfortable. Those transformers are usually equipped with a DETC for adjusting the transformer to the network requirements and, in addition, with an LTC for regulating purposes.

When using DETCs, attention has to be paid to the fact that the DETC may only be operated while the transformer is de-energized that means when the transformer is disconnected on both, the primary and the secondary. Otherwise, the operation may result in failure of the transformer or/and injury to the operator.

Every DETC has to be equipped with at least one safety device to prevent the DETC from being actuated unintentionally or by unauthorized personnel. Such a device may consist of a locking device (e.g., pad lock) at the manual drive mechanism. When using the DETC together with a motor drive, automatic interlocks by means of electrical interlocking circuits are preferred.

The DETC or its drive (hand drive as well as motor drive) has to be equipped with mechanical end stops, which prevent operation past the first and last positions.

For certain applications, such as change of the load direction (advance-retard) in phase-shifting transformers (PSTs) (see Section 14.7) or as two-way change-over selector to overcome the recovery voltage problem selectors are needed, which allow an operation while the transformer is not off circuit. Figure 14.36 shows such a selector, a so-called ARS (advanced-retard switch). The overall design is based on a common DETC, however, with special measures to allow operation without disconnecting the transformer from the network.

14.2.1 Design of De-Energized Tap Changers

DETCs are available as rotary or linear mechanical designs. The designation results from the mode of the mechanical movement of the DETC. The first is characterized by a linear mechanical operation of the movable contact along the stationary contacts (see Figure 14.2), which are arranged in a row. The latter is characterized by a rotation of the moving contact around a fixed axis with the stationary contacts arranged in a circle (see Figures 14.3 and 14.5).

These two major designs from the mechanical point of view are realized in different types for different electrical applications. They are available either as hand- or motor-driven devices. The hand-driven DETCs are typically operated with a handwheel or a hand crank, which are either directly fitted to the

www.EngineeringEbooksPdf.com

FIGURE 14.2 DETC with linear mechanical operation. (Photo courtesy of Maschinenfabrik Reinhausen GmbH, Regensburg, Germany.)

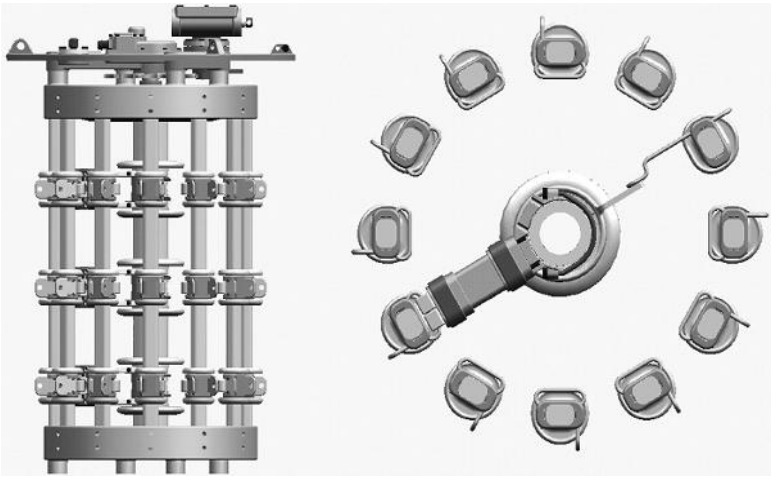

FIGURE 14.3 Side and top view (schematic) on a DETC with rotary mechanical operation. (Photo courtesy of Maschinenfabrik Reinhausen GmbH, Regensburg, Germany.)

www.EngineeringEbooksPdf.com

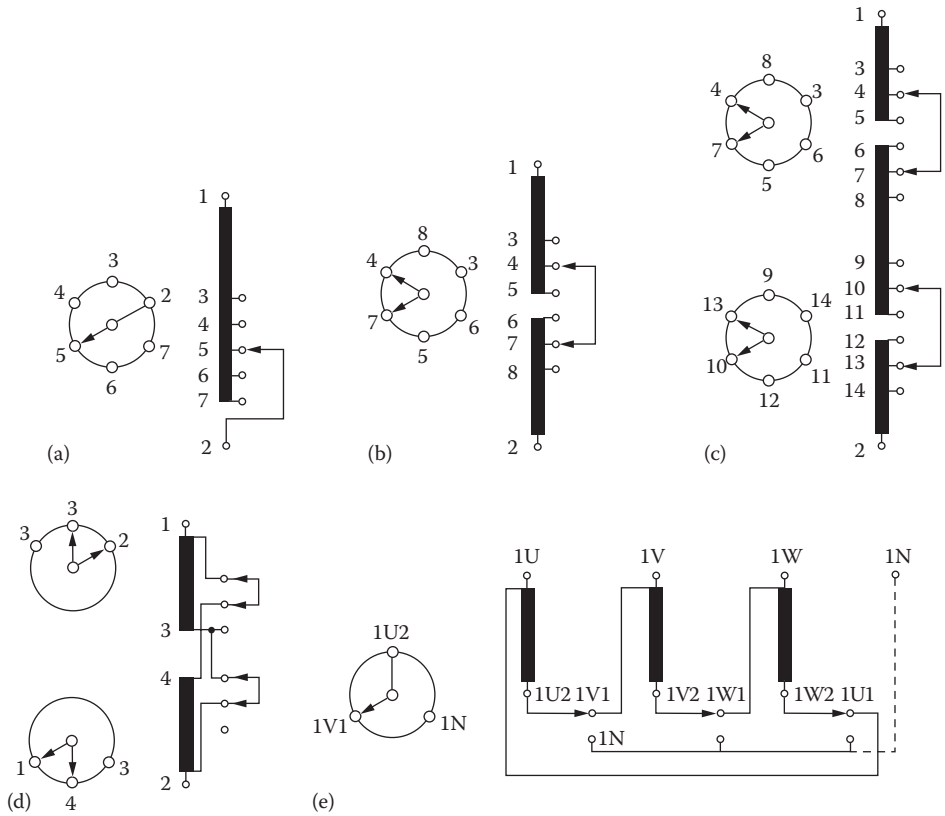

FIGURE 14.4 Basic connections of de-energized tap changers: (a) linear DETC, (b) single-bridging DETC, (c) double-bridging DETC, (d) series–parallel DETC, and (e) star–delta DETC.

DETC for transformer lid mounting, for example, fitted to the DETC head cover or fitted to a remote gland housing mounted on the outside of the transformer. For small-sized DETCs, the handwheel is very often designed as a knob.

14.2.2 Type of Tap Connections of De-Energized Tap Changers

Common applications for de-energized tap-changing are DETCs for linear connection or bridging connection. But also DETCs for special applications as the series–parallel connection for dual voltage transformers or as the star–delta connection for arc furnace transformer are widespread. See Figure 14.4a through e for the winding arrangements.

14.2.2.1 DETC with Linear Connection

The linear regulation is comparable to the typical regulation principle of an OLTC. The tap winding is generally located at one side of the main winding, primarily at the opposite side of the HV terminal. The tapped section of the winding can be part of the main winding, which is typically used in case of distribution and small power transformers, or can be designed as a separate winding, which is common for medium and large power transformers. Winding arrangements, where the tap winding is part of the main winding, produce a magnetic unbalance with the consequence of very high short-circuit forces, which are very often impractical to withstand. Other than in transformers with the lowest ratings, a winding arrangement with a separate tap winding has to be considered as

www.EngineeringEbooksPdf.com

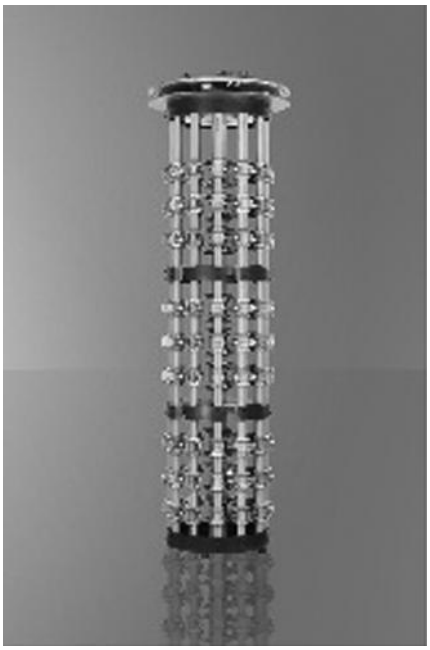

FIGURE 14.5 4000 A linear DETC (rotary design) with 11 operating positions. (Photo courtesy of Maschinenfabrik Reinhausen GmbH, Regensburg, Germany.)

the only choice, because it offers more degree of freedom to maintain a symmetrical ampere-turn distribution over the entire regulating range.

In the linear connection design, all taps are arranged in one group and are added to or subtracted from the main winding by the DETC. The winding terminals of the DETC are connected to the taps of the tap winding. The output terminal of the DETC can be connected to the different tap terminals via the movable contact. Very often, those arrangements are realized with category I (IEEE C57.131-1995) resp. class I (IEC 60214-1:2003) DETCs, if the tap winding can be located at the neutral point of the winding. For this electrical linear regulation, mainly mechanical rotary designs are used. Figure 14.5 shows a linear DETC with 11 operating positions and a maximum rated through-current of 4000 A.

14.2.2.2 DETC with Single-/Double-Bridging Connection

The single-bridging arrangement, sometimes also called zigzag electrical switching design, maintains an overall axial-turn symmetry. However, with increasing number of taps, out of circuit arising flux disturbances result in increased local forces and eddy losses in the windings. This effect becomes more and more important with increasing size of the transformer and can be reduced by choosing a double-bridging arrangement, where the taps are divided in two smaller and symmetrical sections. As a consequence, the single-bridging principle is used for distribution and small power transformers, whereas the double-bridging principle is used in medium and large power transformers.

Those tap-changing arrangements are usually limited to small regulating ranges. Typical values are, for example, ±5% in ±2 steps, which are very often used in autotransformers within the series winding.

The voltage appearing between DETC terminals out of circuit is usually less using the single-/double-bridging principle and allows therefore compact designs, which results in small dimensions of the DETC. This is also true for the design of the windings, which allows smaller clearances of the tap sections.

Figure 14.6 shows a single-bridging DETC with five operating positions and a maximum rated-through current of 3000 A realized as a wedge-type design.

www.EngineeringEbooksPdf.com

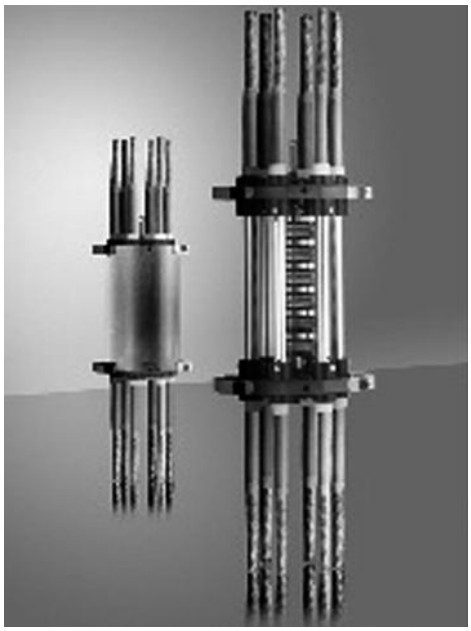

FIGURE 14.6 3000 A single-bridging DETC (wedge type) with five operating positions. (Photo courtesy of Maschinenfabrik Reinhausen GmbH, Regensburg, Germany.)

14.2.2.3 DETC with Series–Parallel Connection

This principle will be used for network transformers, which can be used for two different voltage levels. The winding (generally the main winding) consists of two parts with the same number of turns and can be connected in series or parallel. The series connection serves for the higher voltage level. Those DETCs are available as mechanical rotary designs.

14.2.2.4 DETC with Star–Delta Connection

Those DETCs are used very often in arc furnace applications together with LTCs, where very large voltage regulating ranges are required. Such an arrangement offers the advantage of two regulating ranges with different step voltages. In the delta connection, the step voltages are higher by the factor of $\sqrt{3}$. When changing from the delta connection to the star connection or vice versa, the transformer has to be disconnected. This interruption can be limited to a few seconds and has no impact on the overall process. The tap-changing within the delta or star connection will be achieved in this arrangement with an LTC and can be done on-load. Those DETCs are available as mechanical rotary designs.

14.3 Switching Principle of Load Tap Changers

Figure 14.7 shows the principle winding arrangement of a three-phase regulating transformer, with the LTC located at the wye connection in the high-voltage winding.

Simple changing of taps during energized condition is unacceptable due to momentary loss of system load and/or short-circuit condition between adjacent taps during the switching operation (Figure 14.8). Therefore, the "make (2) before break (1) contact concept," shown in Figure 14.9, is the basic design for all LTCs. The transition impedance in form of a resistor or reactor consists of one or more units that are bridging adjacent taps for the purpose of transferring load from one tap to the other without interruption or appreciable change in the load current. At the same time, they are limiting the circulating current (I_C) for the period when both taps are used. Normally, reactor-type LTCs use the bridging position as a service position, and therefore, the reactor is designed for continuous operation.

www.EngineeringEbooksPdf.com

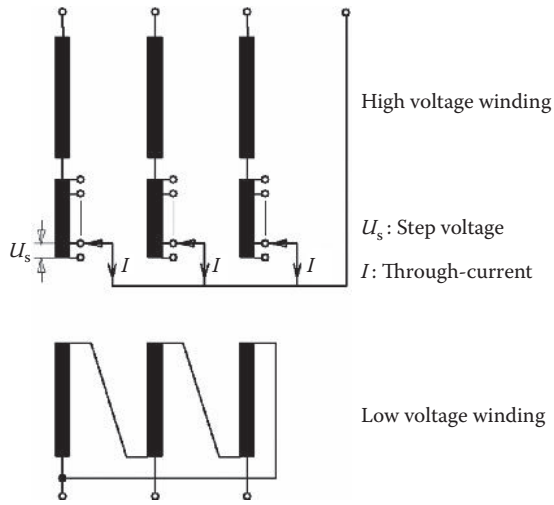

FIGURE 14.7 Principle winding arrangement of a regulating transformer in wye connection.

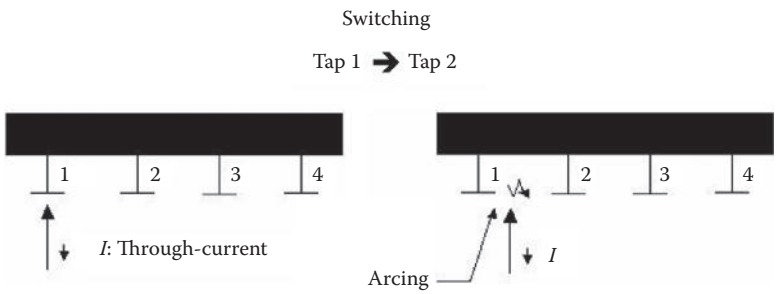

FIGURE 14.8 Loss of system load with single contact switching.

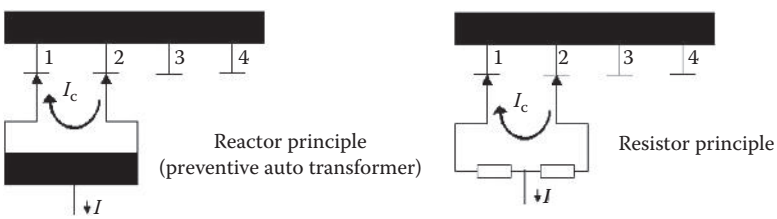

FIGURE 14.9 Basic switching principle "make (2) before break (1)" using transition impedances.

The voltage between the mentioned taps is the step voltage; it normally lies between 0.8% and 2.5% of the rated voltage of the transformer.

The main components of an LTC are contact systems for make and break currents as well as carrying currents, transition impedances, gearings, spring energy accumulators, and a drive mechanism. Depending on the various winding arrangements (details in Section 14.5.1) and LTC designs, separate selector switches and change-over selectors (reversing or coarse type) are used in addition.

14.4 Design Concepts of Today's Load Tap Changers

Beside the selection of taps, the most important duty of an LTC is the break function or current (load) transferring action (see Figure 14.9). After transferring the current, the contact that "breaks" must be capable to withstand the recovery voltage. The so-called required switching capacity (product of

www.EngineeringEbooksPdf.com

switched current and recovery voltage) for a specific contact in an LTC is based on the relevant step voltage and current but is also determined by the design and circuit of the LTC. The switching capacity itself is primarily a function of the contact design, contact speed, and arc-quenching agent.

Historically, most power transformers use mineral oil as a cooling and insulation medium. Also the development of LTCs toward the present state-of-the-art designs was focused on transformer oil. Beside the insulation properties of the transformer oil, the arc-quenching behavior for the switching contacts determined the design and size of so-called oil-type LTCs.

Oil-type LTC means the LTC is immersed in transformer oil, and switching contacts make and break current under oil (e.g., see Section 14.4.1). This conventional LTC technology has reached a very high level and is capable of meeting most requirements of the transformer manufacturer. This applies to the complete voltage and power fields of today, which will probably remain unchanged in the foreseeable future.

Along with the increase in demand for electrical energy in metropolitan areas, the necessity for installing transformers in buildings creates a need for regulating transformers with reduced fire hazards. In addition to this and with respect to the prevention of water pollution, those regulating transformers are preferable that do not require conventional mineral oil as insulating or switching medium.

Apart from gas-immersed transformers, mainly used in Japan, dry-type transformers and transformers with alternative insulating liquids meet these requirements, which are increasingly specified.

For these kind of regulating transformers, the conventional tap changers are little suitable because the use of mineral oil as switching medium is—for the reasons mentioned previously—not desirable and would moreover require technically complex and expensive overall solutions.

Furthermore, worldwide deregulation in the electric industry is still of concern. As part of this market, mechanisms have been encouraged to price transmission services and encourage both generation and transmission investment. In consequence, increased cost pressure on utilities as well as for the industry has led to increased performance expectations on the transformer equipment and LTC, in particular,

1. Long-term uninterrupted availability of the regulating transformer, that is,
   a. Extension of the maintenance intervals
   b. Reduction of the maintenance work
2. Low failure rate
3. Reduction of the operating costs

For all aforementioned new application fields and increased performance expectations, a new common switching technology was asked for.

Various approaches with solid-state technology are being discussed since the 1980s, like static LTCs and hybrid LTCs as resistor or commutating-type, but only a few applications have been realized.

More successful was the first use of vacuum interrupters in reactor-type LTCs in the United States, which started at the same time. The size of the vacuum interrupters at that time, especially for the range of high currents, was not a limiting factor because of the compartment-type design, but it was not so for in-tank resistor-type LTCs.

Looking at the overall profile of

- Quality
- Reliability
- Economy
- LTC lifespan
- Range of ratings

at present time and foreseeable future, the vacuum switching technology in LTCs provides the best solution for today's expectations.

All new LTC designs (resistor and reactor types) of Maschinenfabrik Reinhausen GmbH are based on the vacuum switching technology. Therefore, these new designs are described in more detail (see Section 14.4.2) compared to oil-type LTCs.

www.EngineeringEbooksPdf.com

14.4.1 Oil-Type Load Tap Changers

14.4.1.1 Resistor Oil-Type Load Tap Changer

The LTC design that is normally applied to larger powers and higher voltages comprises a diverter switch (arcing switch) and a tap selector. For lower ratings, LTC designs are used where the functions of the arcing switch and the tap selector are combined in a so-called selector switch (arcing tap switch).

With an LTC comprising an arcing switch and a tap selector (Figure 14.10), the tap change takes place in two steps (Figure 14.11).

First, the next tap is preselected by the tap selector at no load (Figure 14.11a through c). Then the arcing switch transfers the load current from the tap in operation to the preselected tap (Figure 14.11d through g). The LTC is operated by means of a drive mechanism. The tap selector is operated by a gearing directly from the drive mechanism. At the same time, a spring energy accumulator is tensioned. This operates the arcing switch—after releasing in a very short time—independently of the motion of the drive mechanism. The gearing ensures that this arcing switch operation always takes place after the tap preselection operation has been finished. With today's designs, the switching time of an arcing switch lies between 40 and 60 ms.

During the arcing switch operation, transition resistors are inserted (Figure 14.11d through f), which are loaded for 20–30 ms, that is, the resistors can be designed for short-term loading. The amount of resistor material required is therefore relatively small. The total operation time of an LTC is between 3 and 10 s, depending on the respective design.

A selector switch (arcing tap switch) (Figure 14.12) carries out the tap change in one step from the tap in service to the adjacent tap (Figure 14.14). Beside that shown in-tank-type LTC, arcing tap switches are designed as well as compartment-type LTCs (similar to Figure 14.1). The spring energy accumulator, wound up by the drive mechanism, actuates the arcing tap switch sharply after releasing. The earlier statements are valid for switching time and resistor loading (Figure 14.13b through d).

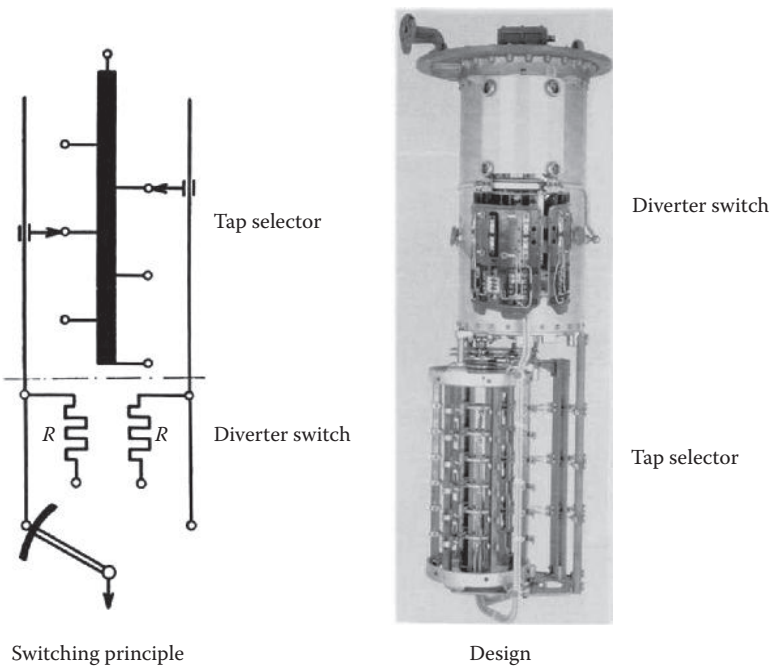

FIGURE 14.10 Design principle—diverter switch (arcing switch) with tap selector. (Photo courtesy of Maschinenfabrik Reinhausen GmbH, Regensburg, Germany.)

www.EngineeringEbooksPdf.com

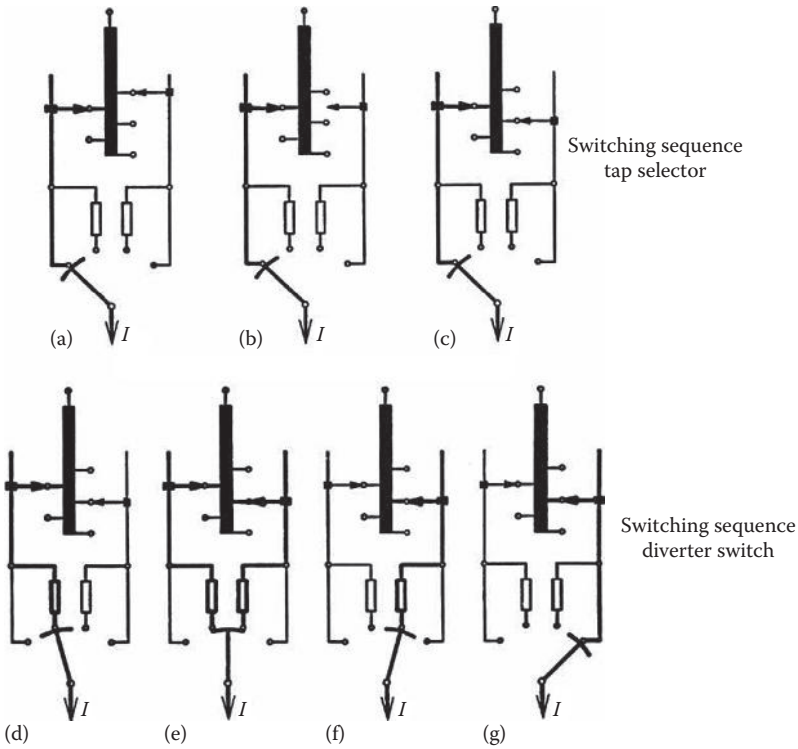

FIGURE 14.11 Switching sequence of tap selector—diverter switch (arcing switch).

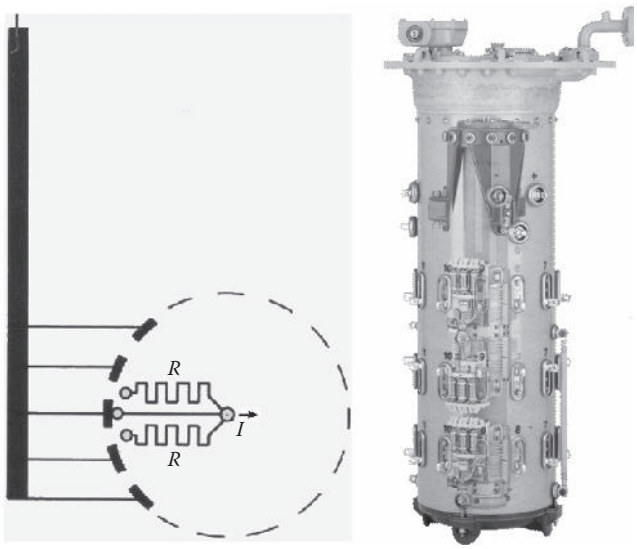

FIGURE 14.12 Design principle—selector switch (arcing tap switch). (Photo courtesy of Maschinenfabrik Reinhausen GmbH, Regensburg, Germany.)

www.EngineeringEbooksPdf.com

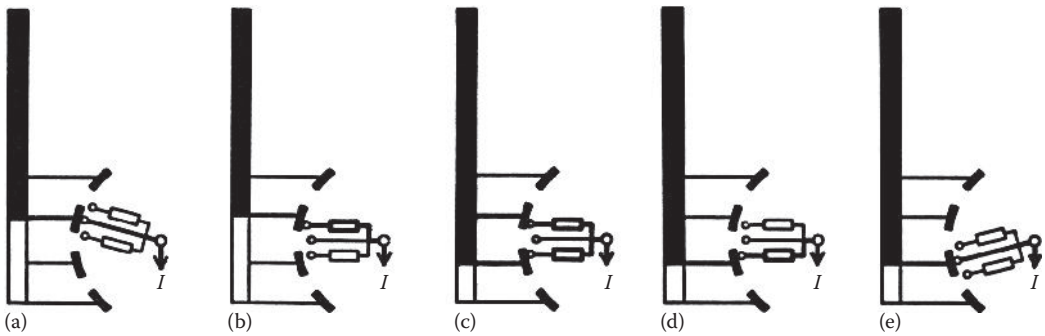

FIGURE 14.13 Switching sequence of selector switch (arcing tap switch).

The details of switching duty, including phasor diagrams, are described by IEEE (Annex A of IEEE C57.131-1995) and IEC (Annex A of IEC 60214-1:2003).

14.4.1.2 Reactor Oil-Type Load Tap Changers

For reactor oil-type LTCs, the following types of switching are used (Annex B of IEEE C57.131-1995 and IEC 60214-1:2003):

- Selector switch (arcing tap switch)
- Diverter switch (arcing switch) with tap selector

All reactor-type LTCs are compartment types where the preventive autotransformer (reactor) is not part of the LTC. The preventive autotransformer is designed by the transformer manufacturer and located in the transformer tank.

Today, only selector switches (arcing tap switches) for voltage regulators are still in production whereas the reactor vacuum-type LTCs (see Sections 14.4.2.2 and 14.4.2.3.2) are going to be the state-of-the-art in the field of power transformers. Therefore, this oil technology is not further discussed in this contribution. For more detailed information about switching duty and phasor diagrams of reactor oil-type LTCs, see Annex B of IEEE C57.131-1995 and IEC 60214-1:2003.

14.4.2 Vacuum-Type Load Tap Changers

14.4.2.1 Fundamentals of Vacuum Switching Technology

In the course of the last two decades, the vacuum switching technology has become the predominant switching technology in the areas of medium-voltage substations and high-capacity power contactors and has replaced oil and SF_6 technologies. Today, worldwide more than 60% of the demand for circuit breakers in the medium-power voltage segment is covered by vacuum-type circuit breakers (Reininghaus and Saemann, 1997; Slade, 1997; Saemann, 1999).

The vacuum switching technology offers also the best qualification to meet new application requirements and increased performance demands from end users on LTCs. Its superiority to competing switching technologies in the range of low and medium power is based on a number of its technical features (Dohnal and Kurth, 2001; Dohnal and Krämer, 2002; Dohnal et al., 2006):

1. Vacuum interrupter is a hermetically sealed system.
   a. There is no interaction with the surrounding medium, despite the arc.
   b. Switching characteristics do not depend on the surrounding medium.
2. Arc (drop) voltage in vacuum is considerably lower than in oil or SF_6.
   a. Low energy consumption.
   b. Reduced contact wear.

www.EngineeringEbooksPdf.com

3. Elimination of the insulating medium as the arc-quenching agent.
   a. Elimination of by-products, for example, carbon when using transformer oil.
   b. On-line filter becomes unnecessary.
   c. Easy disposal.
4. No aging of the quenching medium.
   a. Constant or even improving switching characteristics throughout the entire life of the vacuum interrupters (getter effect).
5. No interaction/oxidation during switching.
   a. High rate of recondensation of metal vapor on contacts extends contact life.
   b. Constantly low contact resistance.
6. Extraordinary fast dielectric recovery of up to 10 kV/μs.
   a. Ensuring short arcing times (maximum one half-cycle) even in case of large phase angles between current and voltage or high-voltage steepness *dU/dt* after the current zero (converter transformers).

14.4.2.2 Implementation of the Vacuum Switching Technology in Load Tap Changers

When developing a vacuum interrupter for use in LTCs, the unique parameters are as follows:

- Mechanical life in transformer oil (or any other given insulating medium) for the operating temperature range and expected lifetime of the LTC
- Switching performance
- Contact life
- Physical dimension

Since the early 1970s, vacuum interrupters that fulfilled the characteristics required by reactor-type LTCs have been developed. These LTCs, which in general are external compartment-type designs, did not dictate any special requirements in regard to the physical size of the interrupter.

Not so with resistor-type LTCs, which in general have a very compact design. Today, after more than three decades of development, vacuum interrupters have reached an advanced technical performance level. The use of modern clean room and furnace soldering technologies during the production process, and new designs of contact systems and material are some of the milestones for this reliable product. This has made the designing of considerably smaller vacuum interrupters possible, opening the door for its application in resistor-type LTCs with overall dimensions equivalent to those of conventional resistor-type LTC designs (see Figures 14.14 and 14.15).

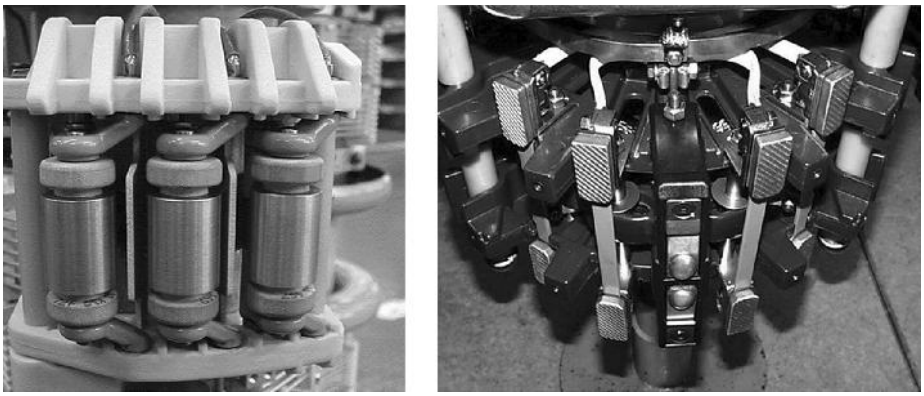

FIGURE 14.14 LTCs with tungsten–copper arcing contact system for mineral transformer oil (different scales). (Photo courtesy of Maschinenfabrik Reinhausen GmbH, Regensburg, Germany.)

www.EngineeringEbooksPdf.com

FIGURE 14.15 Vacuum interrupter designed for different LTC types. (Photo courtesy of Maschinenfabrik Reinhausen GmbH, Regensburg, Germany.)

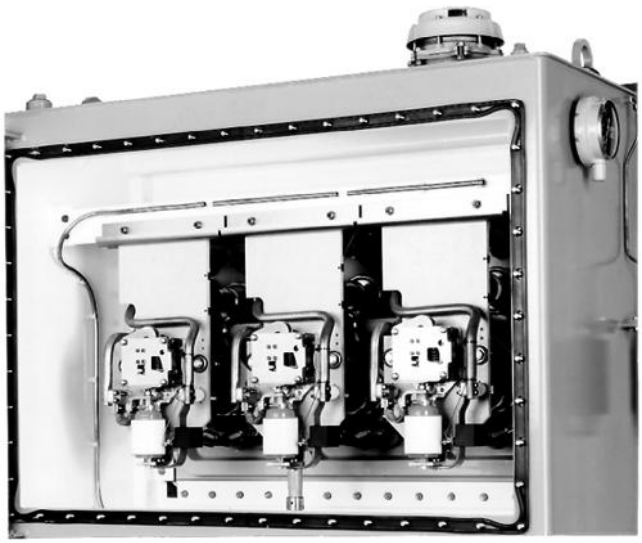

FIGURE 14.16 Reactor vacuum-type LTC with one vacuum interrupter per phase. (Photo courtesy of Maschinenfabrik Reinhausen GmbH, Regensburg, Germany.)

The breakthrough of the vacuum switching technology in LTCs started with the use in reactor-type LTCs. Since the introduction of a new designed reactor-type LTC using vacuum interrupters (Figure 14.16) in 1990, more than 8000 units of this type have been produced. This number represents a total of 24,000 vacuum interrupters in service today, with excellent experience for contact and mechanical lifetime. Particularly in industrial applications (furnace transformers) with extremely high number of switching operations (>100,000 per year), vacuum interrupters have demonstrated their safe operation and superiority compared to the conventional switching process in oil.

Some units have already reached the remarkable number of 1,000,000 operations under load condition where the vacuum interrupters have been changed the first time as a precautionary measure. As mentioned before, this is due to the extreme low loss of contact material of vacuum interrupters.

www.EngineeringEbooksPdf.com

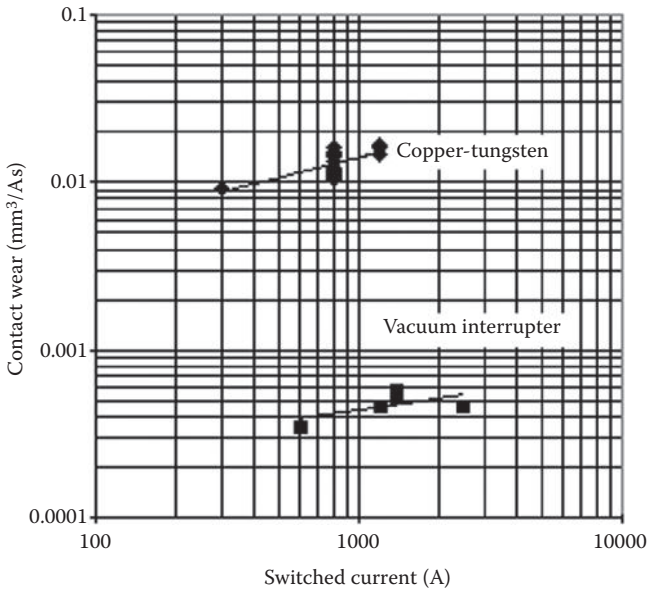

FIGURE 14.17 Comparison of the rates of contact wear of conventional copper–tungsten contacts and vacuum interrupters.

In Figure 14.17, the contact wear due to current breaking is shown for conventional copper–tungsten contacts under oil and for vacuum interrupters. The rate is more than one decade smaller for vacuum interrupters (e.g., rate: 1/30 at 1000 A). Besides the contact material, the contact geometry is the most important factor for this current range and LTC applications. This results in improved contact life, where vacuum interrupters easily reach numbers of switching operations up to 600,000, without changing the interrupters.

In parallel to the aforementioned development in the field of reactor-type tap changers, in 1995, the first resistor-type LTC using vacuum interrupters was designed for the regulation of dry-type transformers and therefore operates in air (see Figure 14.18). So far, more than 1700 single-phase units with 5100 vacuum interrupters have been built and are in service successfully.

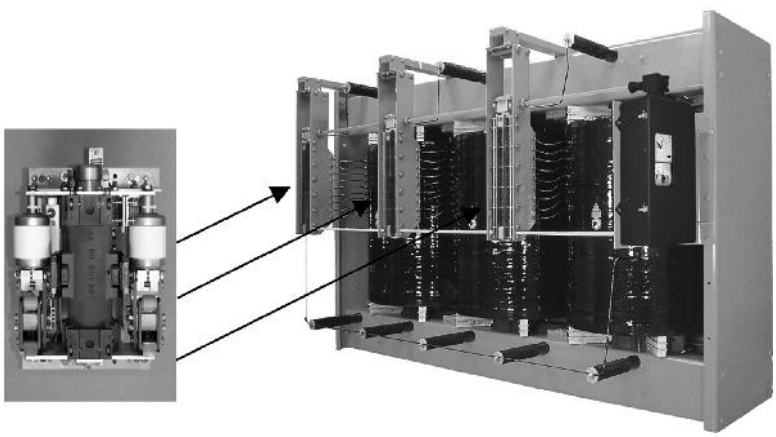

FIGURE 14.18 Resistor vacuum-type LTC for dry-type transformers. (Photo courtesy of Maschinenfabrik Reinhausen GmbH, Regensburg, Germany.)

www.EngineeringEbooksPdf.com

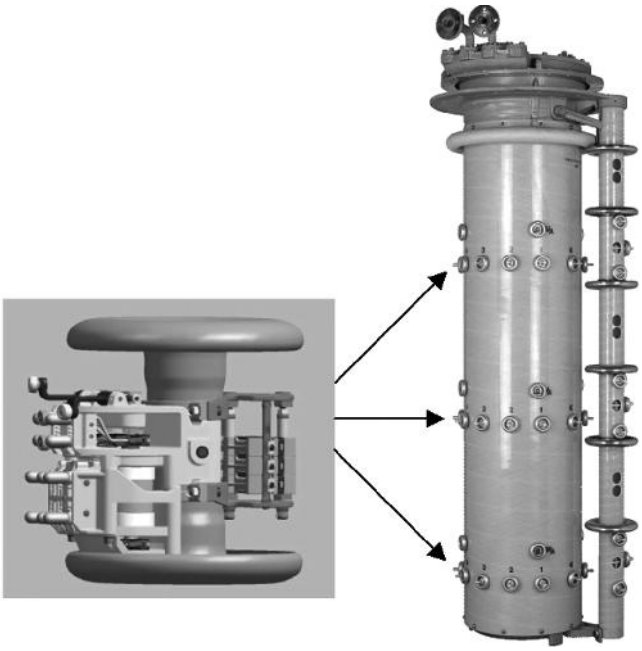

FIGURE 14.19 Resistor vacuum-type LTC for in-tank installations in oil-filled power transformers. (Photo courtesy of Maschinenfabrik Reinhausen GmbH, Regensburg, Germany.)

Since the year 2000, the LTC shown in Figure 14.19 is the first commercially available integrated high-speed resistor vacuum-type LTC for in-tank installations (see Figure 14.19). It represents the first step of the consequent implementation of the vacuum switching technology in the worldwide-applied in-tank LTCs for oil-filled power transformers. Already 7,000 LTCs with 42,000 vacuum interrupters are in service.

The design principle comprising a separate diverter switch and tap selector is shown in Figure 14.20. This LTC design is normally applied to larger power and voltage requirements as well as tapping range. The shown LTC—introduced in the market in 2003—with ratings up to 700 A through-current, 4000 V step voltage, and 1050 kV BIL to ground is the beginning of the vacuum switching implementation in this design concept with its wide range of applications. Consequently, in the year 2006, the current range was extended to 1300 A to cover most of the network and industrial demand. Today, more than 6000 units of this LTC type are in service.

It can be stated that for the time being more than 100,000 vacuum interrupters built into LTCs are successfully in service.

14.4.2.3 Switching Principles of Resistor and Reactor Vacuum-Type Load Tap Changer

The switching principles of vacuum-type LTCs differ from those of conventional ones. A simple duplication of the switching contacts of a conventional LTC with vacuum interrupters would lead to a solution that is unnecessarily more expansive and greater in volume. Therefore, special designs with special switching principles were created on the one hand to reduce the number of necessary vacuum interrupters, but on the other hand to increase the switching duty only a little bit. In the following two sections, two possible designs are introduced.

14.4.2.3.1 Example of a Switching Principle for a Resistor Vacuum-Type Load Tap Changer

Usually, a conventional resistor-type LTC has different sets of switching contacts for the opening and the closing sides of the diverter switch. One idea needed to reduce the number of vacuum interrupters is to

www.EngineeringEbooksPdf.com

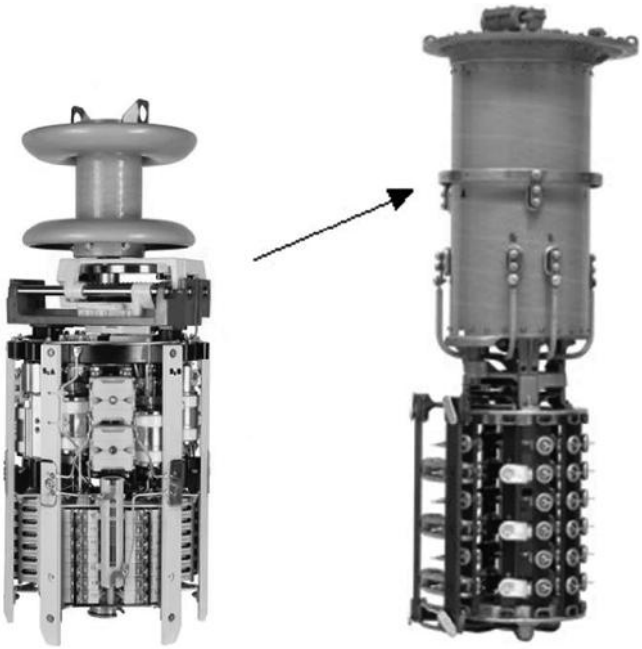

FIGURE 14.20 Resistor vacuum-type LTC with separate diverter switch and tap selector for in-tank installation in liquid-filled power transformers. (Photo courtesy of Maschinenfabrik Reinhausen GmbH, Regensburg, Germany.)

use the same vacuum interrupters for the opening and the closing sides. This method was applied for the switching principle shown in Figure 14.21 and is used in the resistor vacuum-type LTC in Figure 14.19.

This tap changer incorporates two current paths. The main path comprises the main switching contacts (vacuum interrupter MSV) and the corresponding main tap selector contacts MTS connected in series. The transition path comprises the transition contacts (vacuum interrupter TTV) with the corresponding transition tap selector contacts TTS connected in series, and the transition resistor *R*.

The sequence of operation is shown in Figure 14.21. In the initial position (step 1) at tap 1, both vacuum interrupters are closed. Consequently, the interrupters are not exposed to a voltage stress. The tap-change operation starts with the opening of the transition tap selector contacts TTS (step 2). The vacuum interrupter TTV in the transition path opens (step 3) before the transition tap selector contacts TTS close on the adjacent tap, eliminating the possibility of a predischarge arc. Once the transition tap selector contacts TTS has reached the adjacent tap (step 4), the vacuum interrupter TTV closes (step 5), and a circulating current starts to flow.

The circulating current is driven by the voltage difference between the two adjacent taps and is limited by the transition resistor *R*. Subsequently, the vacuum interrupter MSV opens (step 6), transferring the current flow from the main tap selector contacts MTS to the transition path. The load current now flows through tap 2. The main tap selector contacts can now move load free to the adjacent tap (steps 7 and 8). The tap-change operation is finalized with the closing of the vacuum interrupter MSV, which shunts the transition path (step 9).

Tap-change operations in this direction ($m \rightarrow m + 1$), here defined as "raise," follow the described sequence of steps 1–9. On the other hand, tap-change operations in the "lower" direction follow the inverse order of events (steps 9–1).

14.4.2.3.2 Example of a Switching Principle for a Reactor Vacuum-Type Load Tap Changer

The LTC in Figure 14.16 represents the state-of-the-art reactor vacuum-type design for three-phase application with full isolation between phases and to ground (nominal voltage level 69 kV, maximum

www.EngineeringEbooksPdf.com

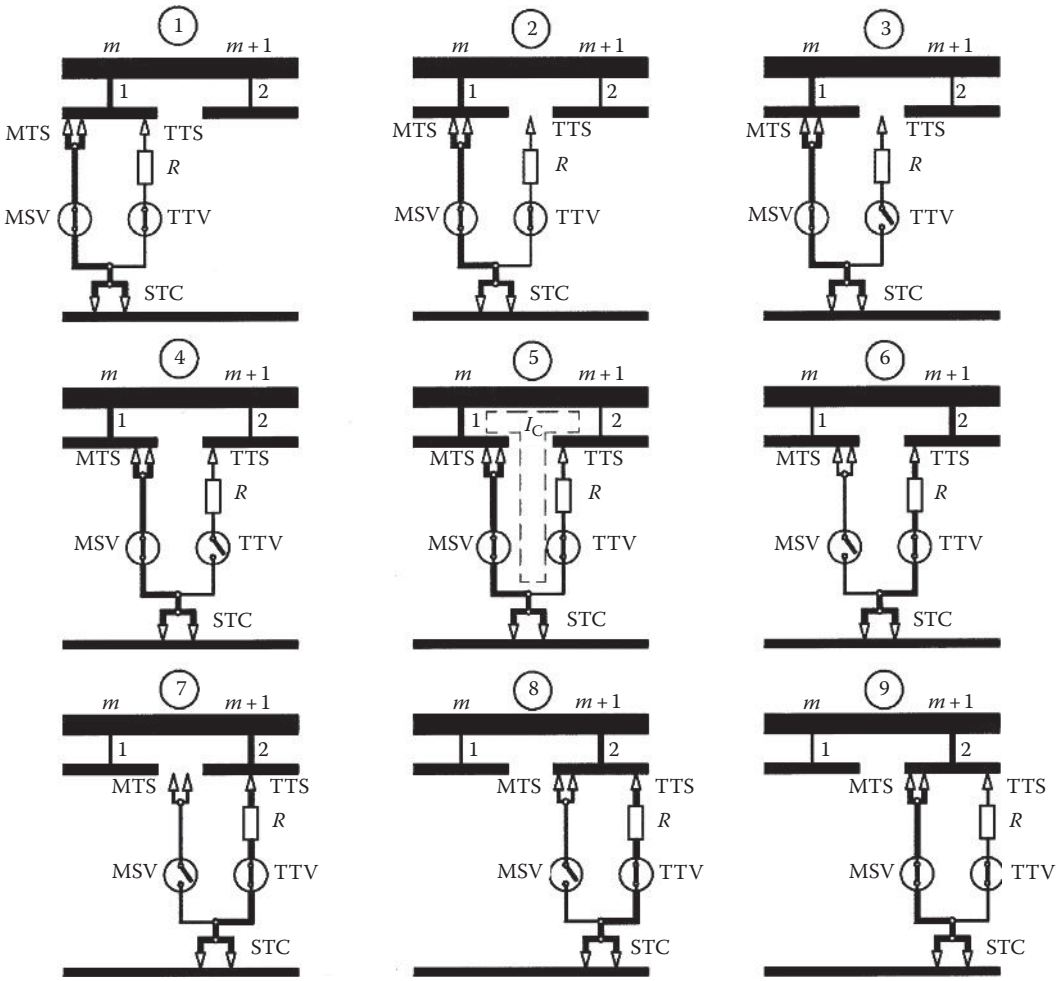

FIGURE 14.21 Switching sequence of resistor-type LTC with the same vacuum interrupters for the closing and opening side of the diverter switch.

through-current up to 2500 A). It consists of an oil compartment containing tap selector and reversing/coarse change-over selector, vacuum interrupters, and bypass switches.

A typical winding layout and the operating sequence of the said LTC are shown in Figure 14.22.

This design utilizes the switching principle (see Figures 14.23 and 14.24) most applied today when using a reactor, which incorporates two auxiliary contacts, the "bypass" switch contacts, to reduce the number of vacuum interrupters required to one interrupter per phase. The tap selector comprises two sets of contacts, which are operated by two separate Geneva wheels. Like any other reactor-type LTC, this tap changer can be operated continuously on "bridging" and "nonbridging" positions. Bridging positions are those positions where the two tap selector contacts connect to two adjacent taps of the regulating winding. On nonbridging positions, on the other hand, both selector contacts connect to the same tap of the regulating winding. Figure 14.23 shows the sequence of operation from a nonbridging position (step 1) to a bridging position (step 7). The continuation from the bridging position (step 7) to the next nonbridging position (step 13) is shown in Figure 14.24.

When on a nonbridging position (Figure 14.23, step 1), the LTC selector contacts and bypass contacts are closed, forming two separate current paths, each carrying 50% of the load current. The tap-change

www.EngineeringEbooksPdf.com

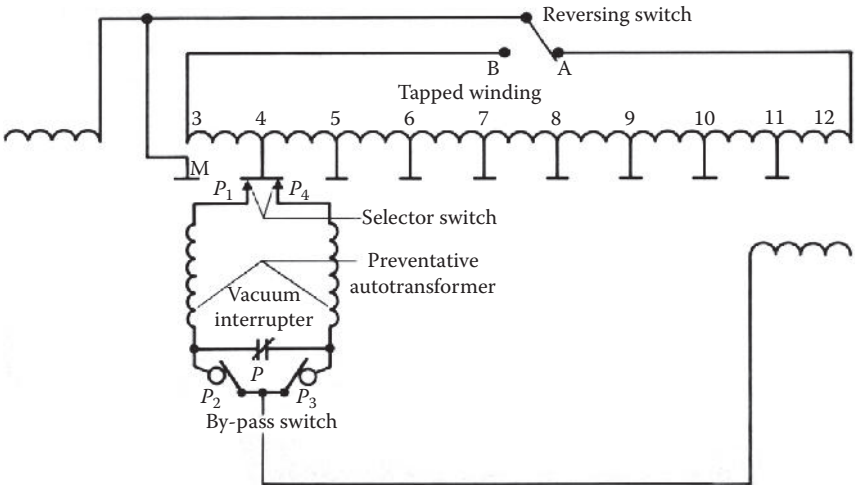

FIGURE 14.22 Reactor vacuum-type LTC—typical winding layout, LTC in position 16L.

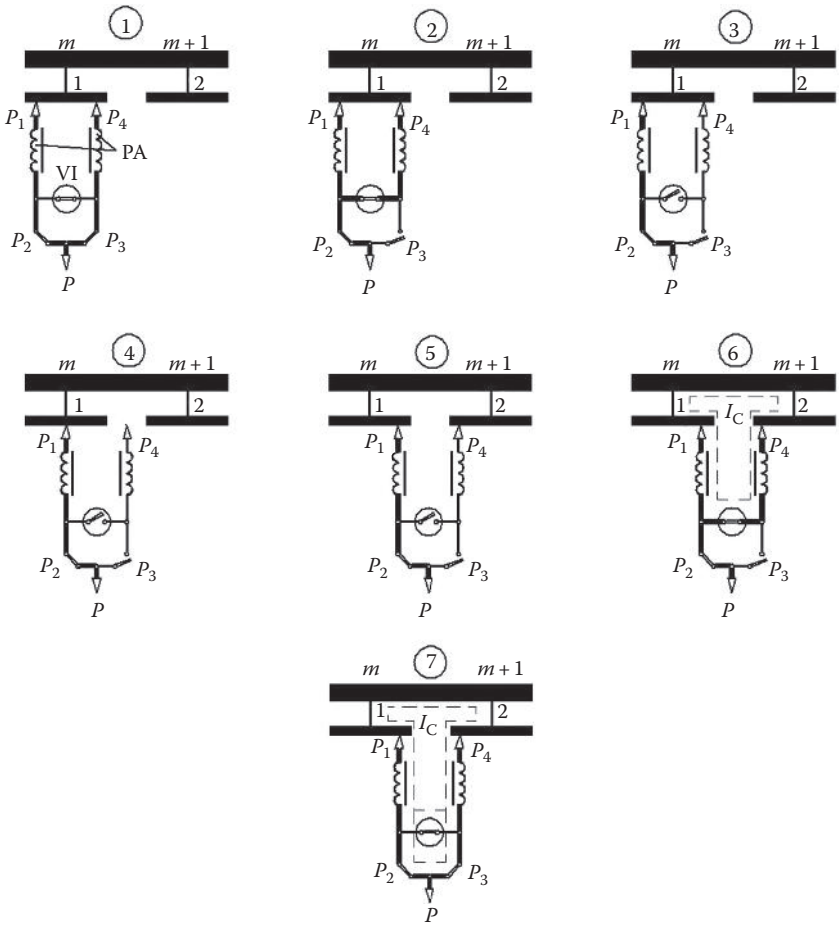

FIGURE 14.23 Switching sequence of reactor-type LTC with one vacuum interrupter per phase from nonbridging to bridging position.

www.EngineeringEbooksPdf.com

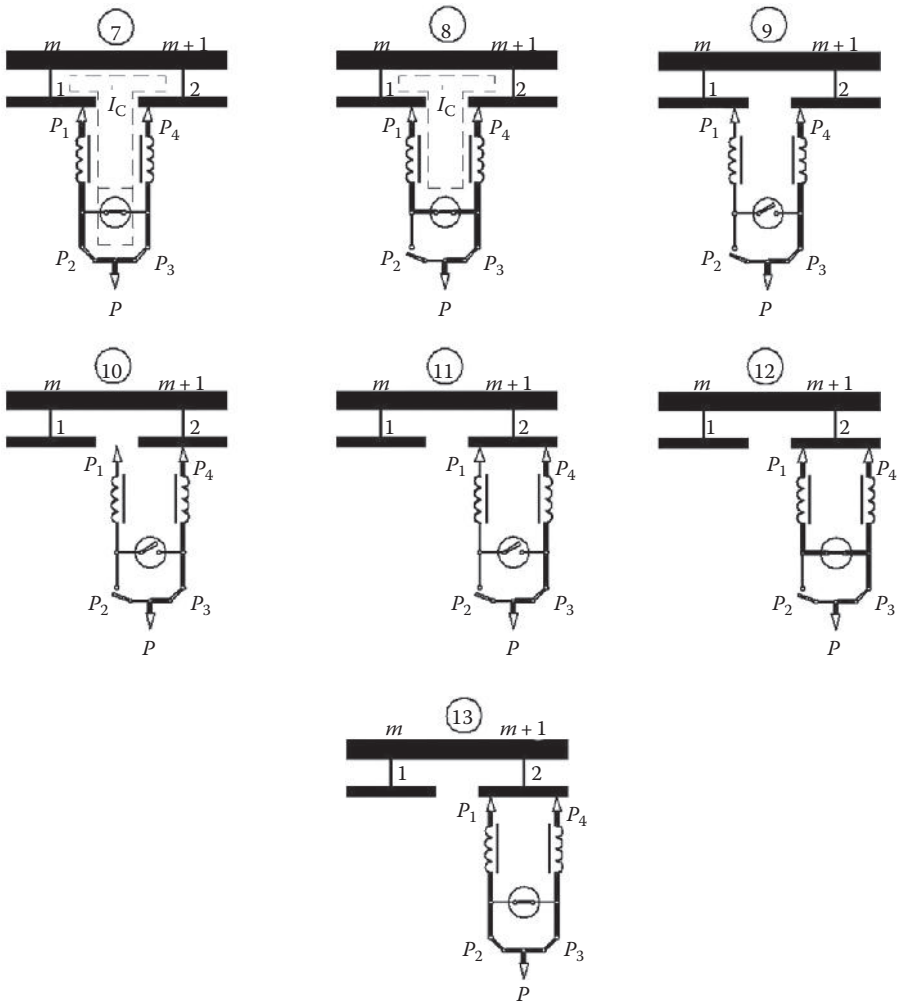

FIGURE 14.24 Switching sequence of reactor-type LTC with one vacuum interrupter per phase from bridging to nonbridging position.

operation starts with the opening of contact P_3 of the bypass switch (step 2). This action routes one-half of the load current through the vacuum interrupter. Subsequently, the vacuum interrupter opens (step 3) under spring force and extinguishes the arc within the first current zero. This transfers the current flow to the P_1–P_2 current path, and the tap selector contact P_4 can now advance load free to the adjacent tap (step 4). Once it has reached its new operating position (step 5), the vacuum interrupter recloses (step 6), followed by the reclosing of the bypass switch P_3 (step 7). The LTC is now on a bridging position. Bridging positions are characterized by a circulating current (I_C in Figures 14.23 and 14.24, step 7) that is driven by the voltage difference between the two adjacent taps and is limited by the impedance of the preventive autotransformer (reactor).

Contrary to resistance-type LTCs, the bridging position—in which the moving selector contacts P_1 and P_4 are on neighboring fixed selector contacts—is a service position, and therefore, the preventive autotransformer/reactor (normally produced by the transformer manufacturer) is designed for continuous operation; that is, the number of tap positions is twice the number of steps of the tap winding. In other words, the preventive autotransformer works as a voltage divider for step voltage of the tap winding

www.EngineeringEbooksPdf.com

in the bridging position. In comparison with the resistance-type LTC, the reactor-type LTC requires only half the number of taps of the tap winding for the equivalent number of service tap positions.

Continuing to the following nonbridging position, the tap-change operation starts now with the opening of the P_2 bypass switch contact (Figure 14.24, step 8). The current now routed through the vacuum interrupter is again extinguished within the first current zero after the opening of the interrupter (step 9). The P_1 selector contact can now move load free to the adjacent tap (step 10). Once the tap selector P_1 reaches its next operating position (step 11), the tap-change operations are completed with the reclosing of the vacuum interrupter (step 12) and bypass switch contact P_2 (step 13).

In order to double the number of positions, a reversing or coarse change-over selector is provided. For this operation, the moving selector contacts P_1 and P_4 have to be on the fixed selector contact M (Figure 14.22).

For more detailed information about switching duty and phasor diagrams, see Annex B of IEEE 57.131-1995 and IEC 60214-1:2003.

14.4.3 Tap Position Indication

There are no general rules for defining the numerals on the tap-position indicator dial. This is a question of the user's specifications or national standards. Some users are accustomed to designations such as 1–33 (or 0–32), while others have traditionally known 16L (lower), 15L, 14L, …, N (neutral); 1R (raise), 2R, …, 16R. An additional point of confusion comes about with the selection of the placement of the tap changer on the primary or secondary winding of the transformer. A tap changer on the primary is sometimes designated such as 1–33, but position #1 may indicate the greatest degree of voltage boost or buck, depending upon the transformer designer.

14.5 Applications of Load Tap Changers

14.5.1 Basic Arrangements of Regulating Transformers

The following basic arrangements of tap windings are used as shown in Figure 14.25.

Linear arrangement (Figure 14.25a) is generally used on power transformers with moderate regulating ranges up to a maximum of 20%.

With a reversing change-over selector (Figure 14.25b), the tap winding is added to or subtracted from the main winding so that the regulating range can be doubled or the number of taps reduced. During this operation, the tap winding is disconnected from the main winding (for a discussion on

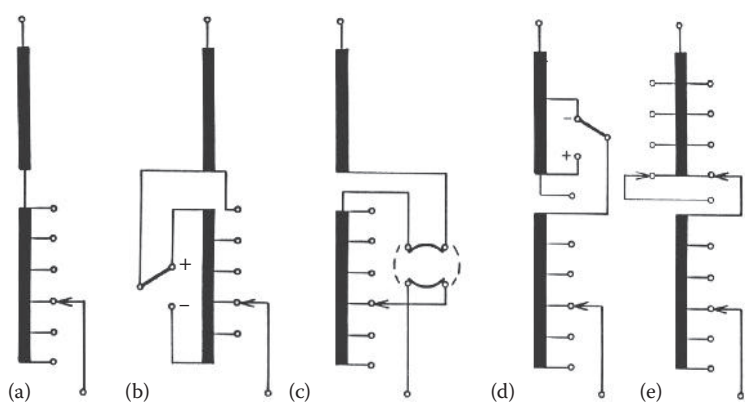

FIGURE 14.25 Basic arrangements of tap windings. (a) Linear. (b) Single reversing change-over selector. (c) Double reversing change-over selector. (d) Single coarse change-over selector. (e) Multiple coarse change-over selector.

www.EngineeringEbooksPdf.com

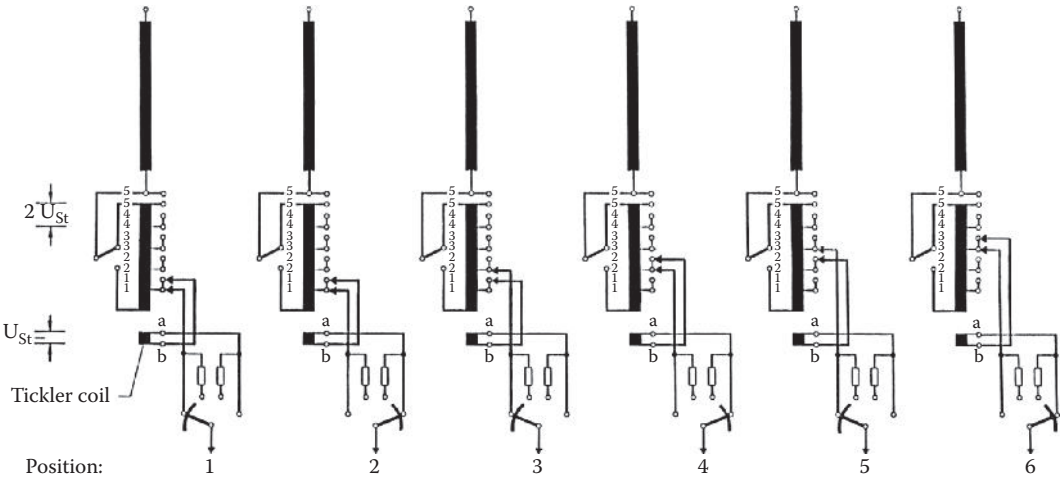

FIGURE 14.26 LTC for tap windings with tickler coil.

problems arising from this disconnection, see Section 14.8.2). The greatest copper losses occur, however, in the position with the minimum number of effective turns. This reversing operation is realized with the help of a change-over selector, which is part of the tap selector or of the arcing tap switch. The double reversing change-over selector (Figure 14.25c) avoids the disconnection of tap winding during the change-over operation. In phase-shifting transformers (PSTs), this apparatus is called an advanced-retard switch (ARS).

By means of a coarse change-over selector (Figure 14.25d), the tap winding is either connected to the plus or minus tapping of the coarse winding. Also during coarse-selector operation, the tap winding is disconnected from the main winding. Special winding arrangements can cause the same disconnection problems as discussed earlier. In addition, the value of the leakage inductance of the coarse winding/tap winding arrangement has to be checked (see Section 14.8.3). In this case, the copper losses are lowest in the position of the lowest effective number of turns. This advantage, however, puts higher demands on insulation material and requires a larger number of windings. The multiple coarse change-over selector (Figure 14.25e) allows a multiplication of the regulating range. It is mainly applied for industrial-process transformers (rectifier/furnace transformers). The coarse change-over selector is also part of the LTC.

An arrangement of LTC for tap winding with tickler coil is applied when the tap winding has, for example, eight steps and where the regulation should be carried out in ±16 steps. In this case, a tickler coil, whose voltage is half the step voltage of the tap winding, is used. The tickler coil is electrically separated from the tap winding and is looped into the diverter switch (arcing switch)/tap selector connection. Figure 14.26 shows the switching sequence: in positions 1, 3, 5, …, the tickler coil is out of circuit; in positions 2, 4, 6, …, the tickler coil is inserted.

Which of these basic winding arrangements is used in the individual case depends on the system and the operating requirements. These arrangements are applicable to two-winding transformers as well as to voltage and PSTs.

The position in which the tap winding and therefore the LTC is inserted in the windings depends on the transformer design.

14.5.2 Examples of Commonly Used Winding Arrangements

Two-winding transformers with wye-connected windings have the regulation applied to the neutral end as shown in Figure 14.27. This results in relatively simple and compact solutions for LTCs and tap windings.

www.EngineeringEbooksPdf.com

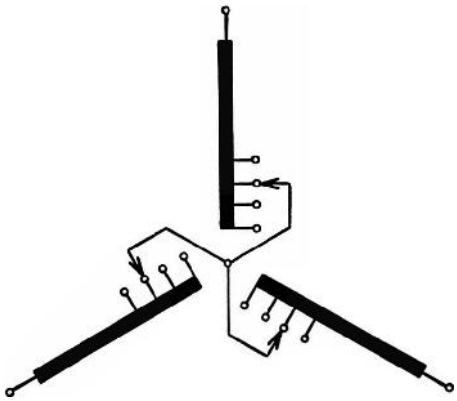

FIGURE 14.27 LTC with wye-connected windings.

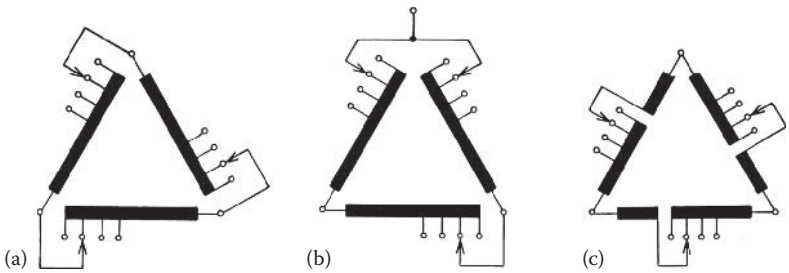

FIGURE 14.28 LTC with delta-connected windings. (a) Three pole line-end arrangement. (b) One and two pole line-end arrangement. (c) Three pole mid-winding arrangement.

Regulation of delta-connected windings (Figure 14.28) requires a three-phase LTC, whose three phases are insulated according to the highest system voltage applied (Figure 14.28a), or three single-phase LTCs, or one single-phase and one two-phase LTC (Figure 14.28b). Today, the design limit for three-phase LTCs with phase-to-phase insulation is a nominal voltage level of 138 kV (BIL [basic impulse insulation level] 650 kV). To reduce the phase-to-phase stresses on the delta LTC, the three-pole mid-winding arrangement (Figure 14.28c) can be used.

For regulated autotransformers, Figure 14.29 shows various schemes.

Depending on their regulating range, system conditions and/or requirements, weight, and size restrictions during transportation, the most appropriate scheme is chosen. Autotransformers are always wye connected:

- Neutral-end regulation (Figure 14.29a) may be applied with a ratio above 1:2 and a moderate regulating range up to 15%. It operates with variable flux.
- Scheme shown in Figure 14.29c is used for regulation of high voltage, U_1.
- For regulation of low voltage U_2, the circuits in Figure 14.29b, d through f are applicable. The arrangements in Figure 14.29e and f are two core solutions. Circuit (Figure 14.29f) is operating with variable flux in the series transformer, but it has the advantage that a neutral-end LTC can be used. In case of arrangement according to Figure 14.29e, main and regulating transformers are often placed in separate tanks to reduce transport weight. At the same time, this solution allows some degree of phase shifting by changing the excitation connections within the intermediate circuit.

www.EngineeringEbooksPdf.com

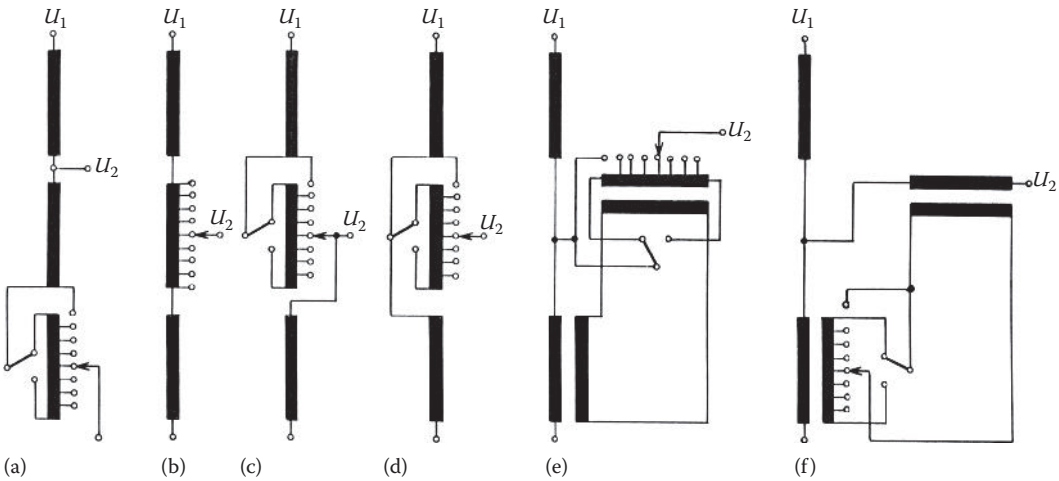

FIGURE 14.29 LTC in autotransformers. (a) Reversing regulation at the neutral point–HV variable, LV variable. (b) Linear regulation at the LV–HV constant, LV variable. (c) Reversing regulation at the LV–HV variable, LV constant. (d) Reversing regulation at the LV–HV constant, LV variable. (e) Reversing regulation–booster connection 1, HV constant, LV variable. (f) Reversing regulation–booster connection 2, HV constant, LV variable.

14.6 HVDC-Transformers

Nowadays high-voltage direct current (HVDC) systems find wide application in the long distance transmission of electric energy with a high economic advantage. In India and China, efforts have been made to increase the DC voltage up to 800 kV and to enlarge the transmission power per line up to 4500 MVA or higher. Consequently, the power rating per unit of converter transformers has been raised in the sending as well as in the receiving stations. LTCs are used in HVDC transformers to change the transformer winding ratio to optimize the firing angle of converter valves and to compensate voltage variations. The demand for operating the transmission line with reduced system voltage for reasons of the system reliability can be realized when changing the turns ratio of the converter transformer by the means of an LTC. In modern HVDC systems, there is a need for a very large regulation range of the converter transformer. Since the number of service positions is limited in a given application for design reasons, there is an increased demand on switching capacity per step of the LTCs due to higher step voltages.

The introduction of resistor-type LTCs with vacuum switching technology instead of conventional arcing contacts under oil not only eliminate the oil contamination due to arc quenching under oil, but are also advantageous for high current steepness during the breaking operation. The unique advantage of the vacuum switching technology is that the arc quenching and the regeneration of the switching/insulating medium happens very rapidly.

For LTCs in HVDC applications, the following special duties can be identified. In those transformers, the valve-side load current wave shape is not sinusoidal, even under normal operation of the valves, and is transferred to the AC side, where the LTC is electrically positioned. Such wave shapes significantly affect the rate of rise of the load current (di/dt), which has to be handled by the diverter switch of the LTC (see Figure 14.30, illustration idealized). The steepness of the current rise is a design parameter and is limited by the transformer short-circuit impedance and the smoothing reactance. This steepness is much higher than the rate of rise of an alternating current of 50 or 60 Hz.

The breaking of the load current on the main switching contacts of the diverter switch takes place at current zero. The recovery voltage on this contact is the voltage drop across the transition resistors caused by the load current and, therefore, the recovery voltage shows the same steepness.

On the transition contact, the recovery voltage is the vector sum of the sinusoidal step voltage and the voltage drop across the transition resistor, which has the waveform of the load current. It is sufficient to

www.EngineeringEbooksPdf.com

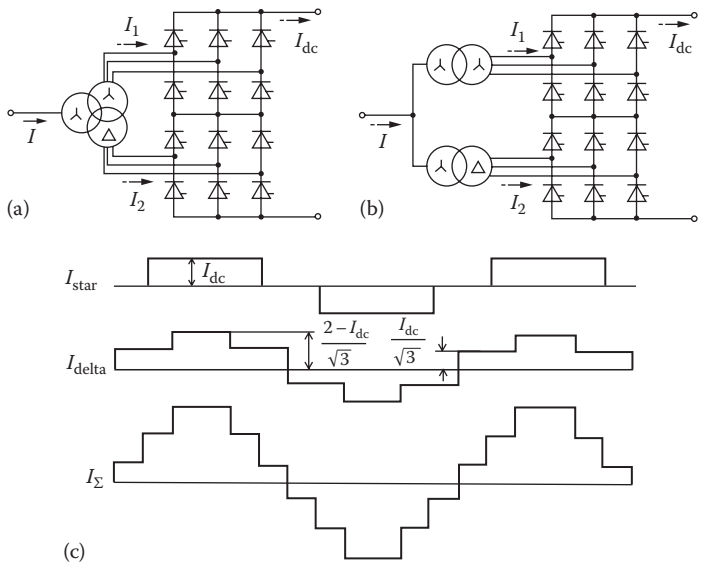

FIGURE 14.30 Twelve-pulse converter unit comprised of two three-phase bridges connected in series on the DC side: (a) fed by a three-windings transformer, (b) fed by two separate transformers, and (c) current wave forms at the AC side.

consider only the switching condition in case of delta connection, because the appearing steepness is representative of both connections. Although the maximum amplitude of the recovery voltage remains unchanged, the increase in rise after current zero of the recovery voltage is 5–10 times faster than that in network power transformers (Figure 14.31).

Each switching contact has a recovery strength curve of the contact distance for a given breaking current. The curve defines the maximum allowable rise and amplitude of the recovery voltage. The main influence factor is the quenching agent, but contact material and mechanical design also have their contribution.

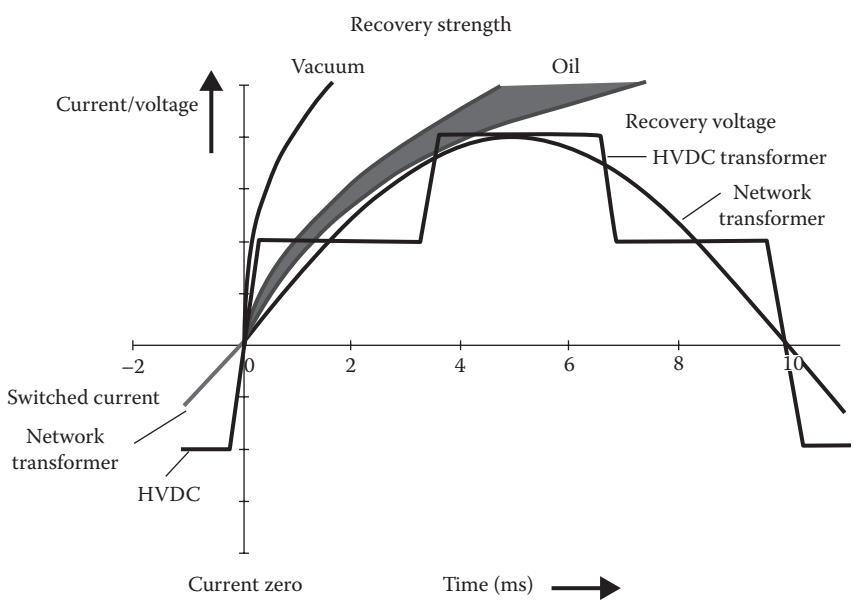

FIGURE 14.31 Recovery voltage at the main switching contacts of an LTC for HVDC converter transformer applications and recovery strength of opening contact configurations.

www.EngineeringEbooksPdf.com

The higher the current steepness is, the faster the recovery strength must rise. For conventional LTCs with oil switching technology, an increase of the recovery strength can only be achieved by taking devices that are tested and qualified for a phase shift between switched current and the rated rms value of the recovery voltage or for remarkably higher rms values of the step voltage without any phase shift (higher peak value causes higher steepness after current zero). This leads inevitably, in many cases, to an oversizing of the conventional LTC to cover the required switching capability.

The effect of the recovery voltage at the transition contacts is more complicated, but the impact is similar.

One big advantage of vacuum switching technology is an extraordinarily fast dielectric recovery of up to 10 kV/μs. This results in a recovery strength, which lies significantly above the curve for oil switching (see Figure 14.31). Besides short arcing times, this also ensures the successful breaking in the first half wave after current zero. With the introduction of vacuum switching technology, an optimization of the LTC rating is now possible. This may lead to smaller LTC solutions and can save space with respect to the volume of the incorporated LTCs in converter transformers and, as a consequence, can reduce the transport weight.

Furthermore, the high performance of vacuum interrupter contact life—today up to 600,000 operations under full load—complies with the required availability for HVDC application.

14.7 Phase-Shifting Transformers

In recent years, the importance of PSTs used to control the power flow on transmission lines in meshed networks has steadily been increasing (Krämer and Ruff, 1998; Preininger, 2004). The fact that IEEE has prepared a "Guide for the Application, Specification, and Testing of Phase-Shifting Transformers" proves the demand for PSTs (IEEE C57.135-2001). These transformers often require regulating ranges that exceed those normally used. To reach such regulating ranges, special circuit arrangements are necessary. Two examples are given in Figures 14.32 and 14.33. Figure 14.32 shows a circuit with direct line-end regulation (single-core design). Figure 14.33 shows an intermediate circuit arrangement (two-core design).

Figure 14.32 illustrates very clearly how the phase angle between the voltages of the source and load systems can be varied by the LTC position. Various other circuit arrangements have been realized.

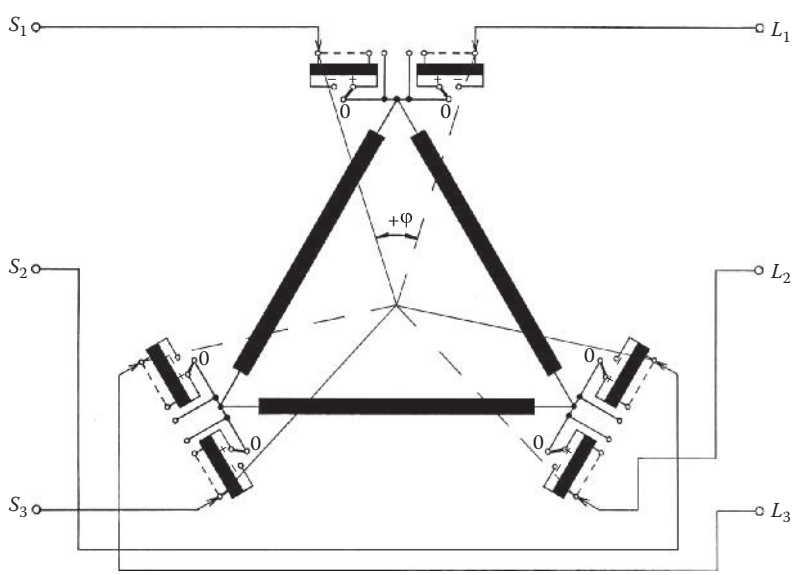

FIGURE 14.32 Phase-shifting transformer—direct circuit arrangement.

www.EngineeringEbooksPdf.com

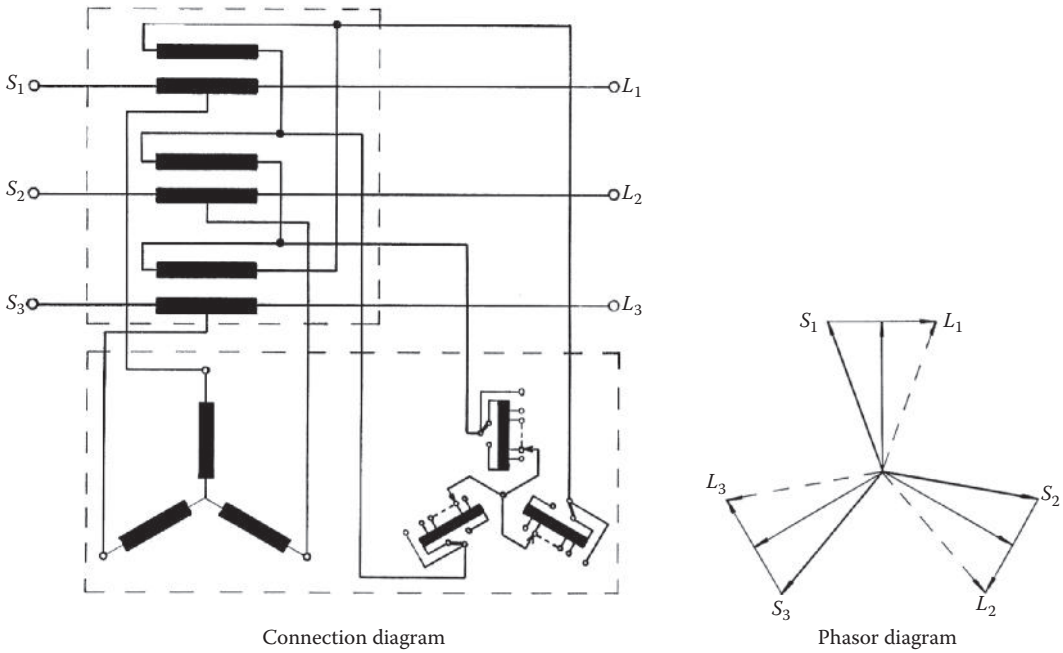

FIGURE 14.33 Phase-shifting transformer—intermediate circuit arrangement.

The number of LTC operations of PSTs is much higher than that of other regulating transformers in networks (10–15 times higher). In some cases, according to regulating ranges—especially for line-end arrangements (Figure 14.32)—the transient overvoltage stresses over tapping ranges have to be limited by the application of nonlinear resistors. Furthermore, the short-circuit-current ability of the LTC must be checked, as the short-circuit power of the network determines the said current. The remaining features of LTCs for such transformers can be selected according to the usual rules (see Section 14.9).

Significant benefits resulting from the use of a PST are as follows:

- Reduction of overall system losses by elimination of circulating currents
- Improvement of circuit capability by proper load management
- Improvement of circuit power factor
- Control of power flow to meet contractual requirements

14.8 Rated Characteristics and Requirements for Tap Changers

The rated characteristics of tap changers are as follows:

- Rated through-current (LTC)
- Maximum rated through-current (LTC, DETC)
- Rated step voltage (LTC)
- Maximum rated step voltage (LTC, DETC)
- Rated frequency (LTC, DETC)
- Rated insulation level (LTC, DETC)

Within the maximum rated through-current of an LTC, there may be different combinations of values of rated through-current and corresponding rated step voltage. Figure 14.34 shows the correlation in the rated step capacity diagram. When a value of rated step voltage is referred to as a specific value of rated through-current (I_u), it is called the relevant rated step voltage (U_i).

www.EngineeringEbooksPdf.com

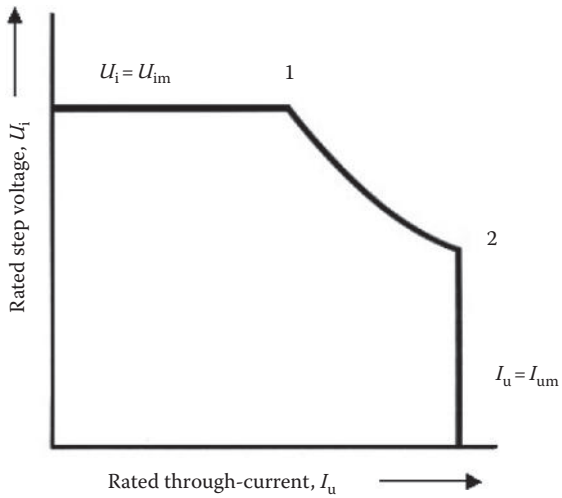

FIGURE 14.34 Rated step capacity diagram of a diverter switch: 1—upper limit point; 2—lower limit point.

The rated step capacity P_{StN} is the product of rated through-current I_u and relevant rated step voltage U_i:

$$P_{StN} = I_u * U_i \tag{14.1}$$

Furthermore, Figure 14.34 illustrates the typical load limits of a diverter switch (arcing switch). This means that the permissible range on the voltage side is limited by the maximum rated step voltage U_{im} and, on the current side, by the maximum rated through-current I_{um}.

The points of the curve located between limit points 1 and 2 are determined by the permissible rated switching capacity. The permissible switching capacity between limit points 1 and 2 corresponds to related pairs of values for I_u and U_i and may be constant or varying.

The rated step capacity diagram as well as individual values for I_u and U_i in limit points 1 and 2 is specified separately for each type of LTC.

The basic requirements for tap changers are laid down in various standards (IEEE Std. C57.131-1995, IEC 60214-1:2003 and IEC 60214-2:2004).

The main features to be tested during design tests are as follows:

- Contact life: IEEE Std. C57.131-1995-6.2.1.1 and IEC 60214-1:2003-5.2.2.1 (not applicable to DETCs, because their operation is always de-energized):
  Fifty thousand operations at the maximum rated through-current and the relevant rated step voltage shall be performed. The result of these tests may be used by the manufacturer to demonstrate that the contacts used for making and breaking current are capable of performing, without replacement of the contacts, the number of operations guaranteed by the manufacturer at the rated through-current and the relevant rated step voltage.
- Temporary overload: IEEE Std. C57.131-1995-6.1.3 and 6.2.2 and IEC 60214-1:2003-4.3, 5.2.1, 5.2.2.2, and 7.2.1:
  At 1.2 times maximum rated through-current, temperature-rise tests of each type of contact carrying current continuously shall be performed to verify that the steady-state temperature rise above the temperature of the insulating liquid, surrounding the contacts, does not exceed 20 K in case of LTCs and 15 K in case of DETCs. In addition for LTCs, breaking-capacity tests shall be performed with 40 operations at a current up to twice the maximum rated through-current and at the relevant rated step voltage.

  Tap changers that comply with the said design tests, and when installed and properly applied to the transformer, can be loaded in accordance with the applicable IEEE or IEC loading guides.

www.EngineeringEbooksPdf.com

TABLE 14.1 Number of LTC Switching Operations in Various Fields of Application

	Transformer Data			Number of On-Load Tap Changer Operations per Year		
Transformer	Power MVA	Voltage kV	Current A	Min.	Medium	Max.
Power station	100–1,300	110–765	100–2,000	500	3,000	10,000
Interconnected	200–1,500	110–765	300–3,000	300	5,000	25,000
Network	15–400	60–525	50–1,600	2,000	7,000	20,000
Electrolysis	10–300	20–110	50–3,000	10,000	30,000	150,000
Chemistry	1.5–80	20–110	50–1,000	1,000	20,000	70,000
Arc furnace	2.5–150	20–230	50–1,000	20,000	50,000	300,000

- Mechanical life (LTC): IEEE Std. C57.131-1995-6.5.1 and IEC 60214-1:2003-5.2.5.1:
  A mechanical endurance test of 500,000 tap-change operations without load has to be performed. During this test, the LTC shall be assembled and filled with insulating liquid or immersed in a test tank filled with clean insulating liquid and operated as for normal service conditions.

  Compared with the actual number of tap-change operations in various fields of application (Table 14.1), it can be seen that the mechanical endurance test covers the service requirements.

  DETCs have to be tested mechanically according to IEC 60214-1:2003-7.2.4.1 with 2000 operations. If the DETC is declared to be suitable for motor-drive operation, then the mechanical endurance test has to be carried out with 20,000 operations:
- Short-circuit-current strength: IEEE Std. C57.131-1995-6.3 and IEC 60214-1:2003-5.2.3 and 7.2.3:
  All contacts of different designs that carry current continuously shall be subjected to three short-circuit test currents of 10 times maximum rated through-current (valid for $I > 400$ A), with an initial peak current of 2.5 times the rms value of the rated short-circuit current, each current application of at least 2 s duration.
- Dielectric requirements: IEEE Std. C57.131-1995-6.6 and IEC 60214-1:2003-5.2.6 and 7.2.5:
  The dielectric requirements of a tap changer depend on the transformer winding to which it is to be connected.

  The transformer manufacturer shall be responsible not only for selecting a tap changer of the appropriate insulation level but also for the insulation level of the connecting leads between the tap changer and the winding of the transformer.

  The insulation level of the tap changer is demonstrated by dielectric tests—in accordance with the standards (basic lightning impulse/rated lightning impulse withstand voltage; switching impulse/rated switching impulse withstand voltage, if required; applied voltage/rated separate source AC withstand voltage; partial discharge, if required)—on all relevant insulation distances at the tap changer.

  The test and service voltages of the insulation between phases and to ground shall be in accordance with the standards. The values of the withstand voltages of all other relevant insulation distances of the tap changer shall be declared by the manufacturer of the tap changer.
- Oil tightness of diverter switch (arcing-switch) oil compartment, IEC 60214-1:2003-5.2.5.4 (not applicable to DETCs):
  The analysis of gases dissolved in the transformer oil is an important, very sensitive, and commonly used indication for the operational behavior of a power transformer. To avoid any influence of the switching gases produced by each operation of the arcing switch, on the results of the said gas-in-oil analysis, the arcing-switch oil compartment has to be oil tight. Furthermore, the arcing-switch conservator tank must be completely separated from the transformer conservator tank on the oil and on the gas side.

  Vacuum- and pressure-withstand values of the oil compartment shall be declared by the manufacturer of the LTC.

www.EngineeringEbooksPdf.com

14.9 Selection of Load Tap Changers

14.9.1 General Selection Criteria

The selection of a particular LTC will render optimum technical and economical efficiency if requirements due to operation and testing of all conditions of the associated transformer windings are met. In general, usual safety margins may be neglected as LTCs designed, tested, selected, and operated in accordance with IEEE standards C57.131-1995 and IEC standards 60214-1:2003 and 60214-2:2004 are most reliable. The details for the selection of LTCs are described in Krämer (2000).

To select the appropriate LTC or DETC, the following important data of associated transformer windings should be known:

- MVA rating
- Connection of tap winding (for wye, delta, or single-phase connection)
- Rated voltage and regulating range
- Number of service tap positions
- Insulation level to ground
- Lightning impulse and power-frequency voltage of the internal insulation

The following operating data which are important for an LTC may be derived from this information:

- Rated through-current, I_u
- Step voltage, U_{st}
- Step capacity, $P_{st} = I_u * U_{st}$

And the appropriate tap changer can be determined as follows:

- LTC or DETC type
- Number of poles
- Nominal voltage level of the tap changer
- Tap selector size/insulation level
- Basic connection diagram

If necessary, the following characteristics of the tap changer should be checked:

- Breaking capacity
- Overload capability
- Short-circuit current (especially to be checked in case of Figure 14.32 applications)
- Contact life

In addition to that, the following two important LTC stresses (not applicable to DETCs, because their operation is always de-energized)—resulting from the arrangement and application of the transformer design—have to be checked.

14.9.2 Voltage Connection of Tap Winding during Change-Over Operation

During the operation of the reversing or coarse change-over selector, the tap winding is disconnected momentarily from the main winding. It thereby takes a voltage that is determined by the voltages of the adjacent windings as well as by the coupling capacities to these windings and to grounded parts. In general, this voltage is different from the voltage of the tap winding before the change-over selector operation. The differential voltages are the recovering voltages at the opening contacts of the change-over selector, and when reaching a critical level, they are liable to cause inadmissible discharges on the change-over selector. If these voltages exceed a certain limit value (for special product series, said limit voltages are in the range of 15–35 kV), measures regarding voltage control of the tap winding must be taken.

www.EngineeringEbooksPdf.com

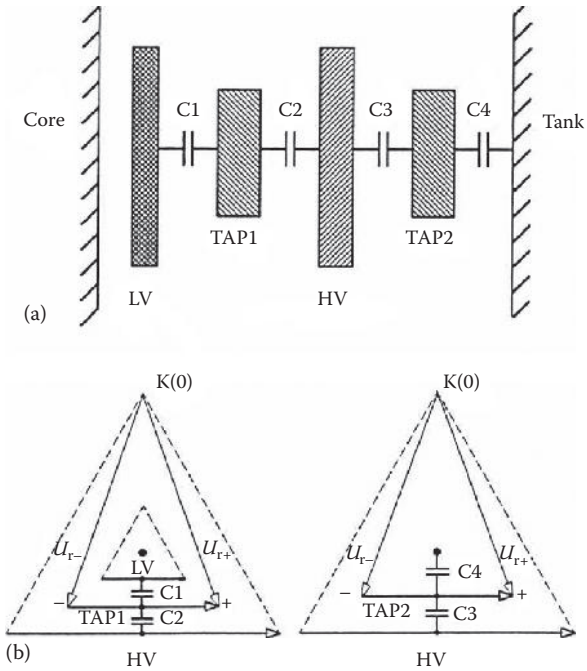

FIGURE 14.35 (a) Phase-shifting transformer, circuit (as shown in Figure 14.32); (b) typical winding arrangement with two tap windings; recovery voltages (U_{r+}, U_{r-}) for tap windings 1 and 2 (phasor diagram).

Especially in case of PSTs with regulation at the line end (e.g., Figure 14.32), high recovery voltages can occur due to the winding arrangement. Figure 14.35a illustrates a typical winding arrangement of PST according to Figure 14.32. Figure 14.35b gives the phasor diagram of that arrangement without limiting measures. As it can be seen, the recovery voltages appearing at the change-over selector contacts are in the range of the system voltages on the source and the load side.

It is sure that an LTC cannot be operated under such conditions. This fact has already been taken into account during the planning stage of the PST design. There are three ways to solve the aforementioned problem:

1. Install screens between the windings. These screens must have the voltage of the movable change-over selector contact 0 (Figure 14.32). See also Figure 14.36.
2. Connect the tap winding to a fixed voltage by a fixed ohmic resistor (tie-in resistor) or by an ohmic resistor, which is only inserted during change-over selector operation by means of a voltage switch. This ohmic resistor is usually connected to the middle of the tap winding and to the current take-off terminal of the LTC (Figure 14.37).
3. Use an ARS as change-over selector (Figure 14.38). This additional unit allows the change-over operation to be carried out in two steps without interruption. With this arrangement, the tap winding is connected to the desired voltage during the whole change-over operation. As this method is relatively complicated, it is only used for high-power PSTs.

The common method for the voltage connection of tap windings is to use tie-in resistors. The following information is required to dimension tie-in resistors:

- All characteristic data of the transformer such as power, high and low voltages with regulating range, winding connection, insulation levels
- Design of the winding, that is, location of the tap winding in relation to the adjacent windings or winding parts (in case of layer windings)

www.EngineeringEbooksPdf.com

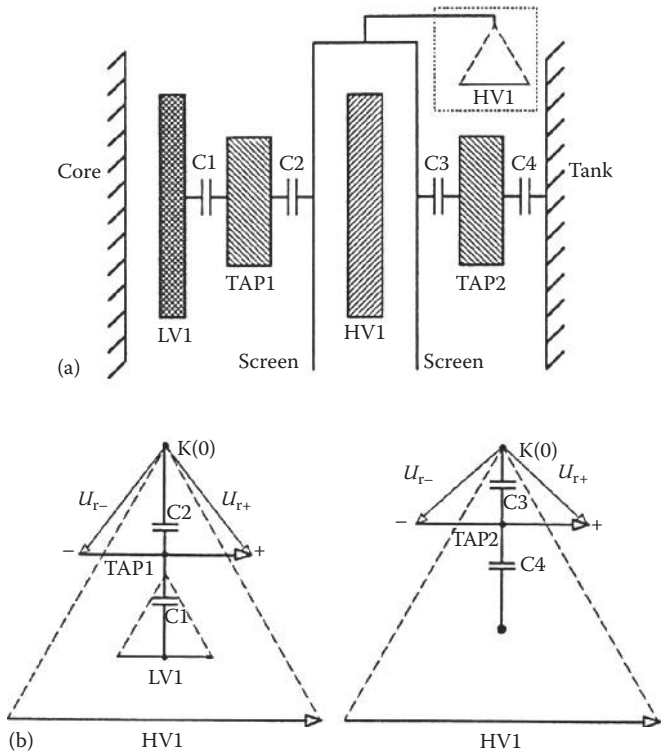

FIGURE 14.36 (a) Phase-shifting transformer, circuit (as shown in Figure 14.32); (b) winding arrangement with two windings and screens; recovery voltages (U_{r+}, U_{r-}) for tap windings 1 and 2 (phasor diagram).

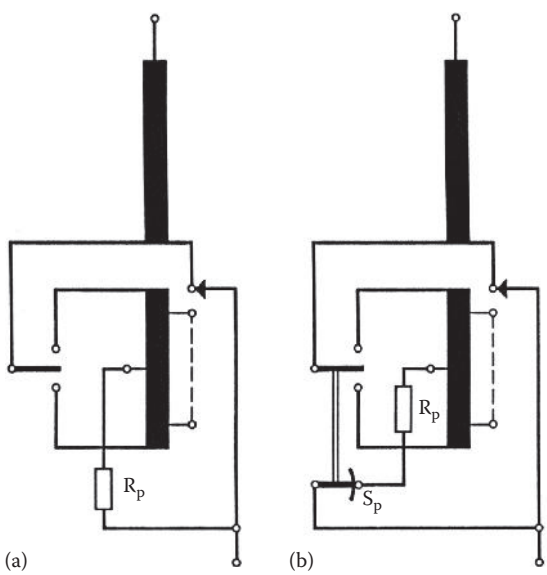

FIGURE 14.37 Methods of voltage connection (reversing change-over selector in mid-position): (a) fixed tie-in resistor R_p and (b) with voltage switch S_p and tie-in resistor R_p.

www.EngineeringEbooksPdf.com

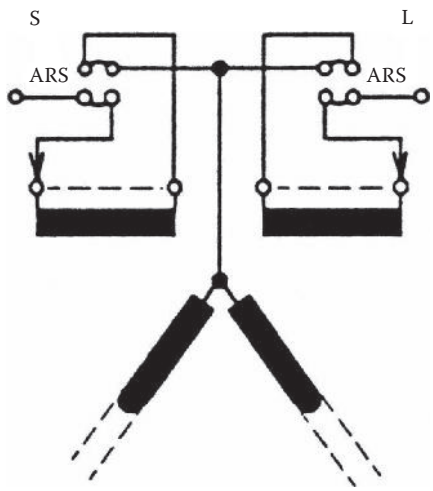

FIGURE 14.38 Phase-shifting transformer—change-over operation by means of an advance-retard switch (ARS).

- Voltages across the windings and electrical position of the windings within the winding arrangement of the transformer that is adjacent to the tap winding
- Capacity between tap winding and adjacent windings or winding parts
- Capacity between tap winding and ground or, if existing, grounded adjacent windings
- Surge stress across half of tap winding
- Service and test power-frequency voltages across half of the tap winding

14.9.3 Effects of the Leakage Inductance of Coarse Winding/Tap Winding during the Operation of the Diverter Switch (Arcing Switch) When Passing the Mid-Position of the Resistor-Type Load Tap Changer

During the operation of the arcing switch from the end of the tap winding to the end of the coarse winding and vice versa (passing mid-position, see Figure 14.39a), all turns of the whole tap winding and coarse winding are inserted in the circuit.

This results in a leakage inductance value that is substantially higher than during operation within the tap winding, where only negligible leakage inductance of one step is relevant (Figure 14.39b). The higher inductance value in series with the transition resistors has an effect on the circulating current, which is flowing in the opposite direction through coarse winding and tap winding during the arcing-switch operation.

Consequently, a phase shift between switched current and recovery voltage takes place at the transition contacts of the arcing switch and may result in an extended arcing time.

In order to ensure optimum selection and adaptation of the LTC to these operating conditions, it is necessary to specify the leakage inductance of coarse winding and tap winding connected in series.

14.10 Tap Changers Not Immersed in Mineral Oil

Increasing demands for more fire safety and higher environmental integrity become more and more important for distribution and power transformers as well as for tap changers. Transformers usually contain 1000 gallons of mineral oil as cooling and insulating medium. In general, tap changers use the transformer oil as insulating, cooling, and lubricating fluid. In case of LTCs, the oil is used in addition as arc-quenching medium in their diverter switch compartments.

www.EngineeringEbooksPdf.com

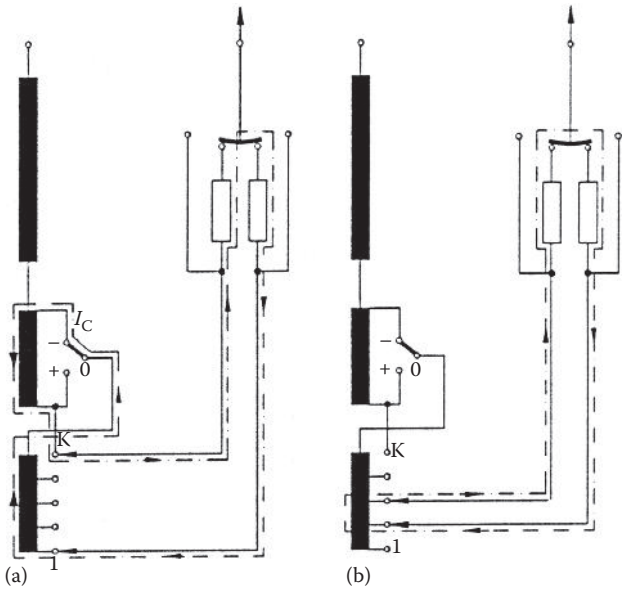

FIGURE 14.39 Effect of the leakage inductance of coarse winding/tap winding arrangement: (a) operation through mid-position and (b) operation through any tap position besides mid-position.

In the past, the arc-quenching requirement for LTCs was the biggest obstacle for the replacement of the mineral oil in LTCs. With the introduction of the vacuum switching technology in LTCs, other media within the transformer and the tap changer arose as possible solutions because the arcing is kept enclosed within the vacuum interrupter. Such media include several synthetic and natural esters, HMWHs (*h*igh-*m*olecular-*w*eight *h*ydrocarbons), silicon fluids as well as SF_6-gas and air. Regulating transformers with SF_6-gas-insulation are in service since several years in Japan and a few other countries.

One environmental friendliness aspect, the biodegradability, of a substance can be judged, for example, by its water hazard classification. In this regard, esters have an advantage compared to mineral oil, HMWH, and silicon oil because they are classified as "not hazardous to water." A second environmental aspect is renewable resources. Natural esters are obtained from seed oils such as canola, soya beans, sunflowers, or coconuts and therefore fulfill this requirement. Due to filtering and use of additives, these seed oils become high-quality electro insulating oils.

These environmental advantages together with a higher flash point of these fluids make the alternative liquids mentioned earlier to a seminal solution. The application of those alternative liquids may require modified selection criteria or even a different tap changer design.

14.11 Protection Devices for Load Tap Changers

The protective devices for LTCs are designed to limit or prevent the effect of the following stresses: inadmissible increase of pressure within the diverter switch (arcing-switch) compartment or the separate compartment of the reactor-type LTC, respectively; operation of LTCs with overcurrents above certain values; operation of LTCs at oil temperatures below the limit laid down in the standards (–25°C) (IEEE C57.131-1995; IEC 60214-1:2003); and inadmissible voltage stresses of the insulation in the arcing switch caused by transient overvoltages. The following control and protective equipment is in use:

- Liquid-flow relays inserted into the pipe between LTC head and conservator are mostly used for in-tank LTCs (Figure 14.40). They respond to disturbances in the arcing-switch compartment of relatively low-energy up to high-energy dissipation within a reasonable time, avoiding damages

www.EngineeringEbooksPdf.com

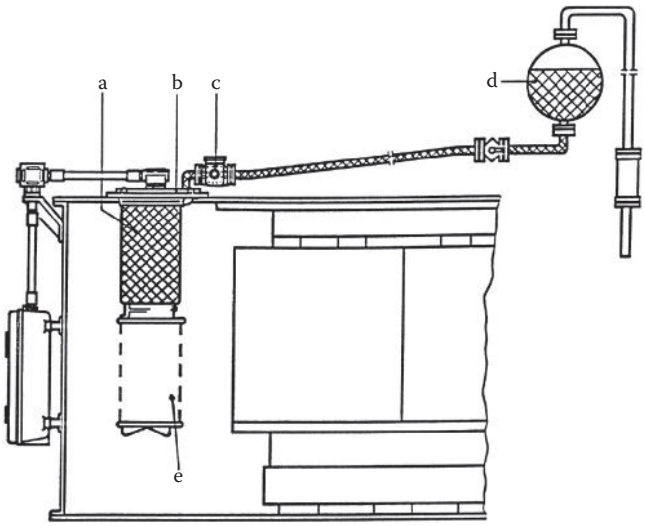

(a) Diverter switch oil compartment
(b) Integrated pressure relief diaphragm
(c) Liquid-flow relay
(d) Liquid conservator
(e) Tap selector

FIGURE 14.40 Arrangements of protection devices of internally mounted LTCs.

to the LTC and the transformer. The liquid-flow relay has to disconnect the transformer. To give alarm only, as it is practiced in some users' systems, is not allowed because it is dangerous and could lead to severe faults.

- Pressure-sensing and/or pressure-releasing relays are also often used parallel to the liquid-flow relay or alone. Their response time is a little bit shorter than that of the liquid-flow relay. But decrease in the response time is of minor importance because the complete disconnecting time of the transformer is determined by the total response time of the control circuit that trips the circuit breakers of the transformer and that is much longer than the response time of the liquid-flow relay.
- At oil temperatures below –25°C, it may be necessary to provide special devices, for example, blocking the drive mechanism to obtain reliable service behavior of the LTC.
- An overcurrent blocking device that stops the LTCs' drive mechanism during an overload is used in many utilities as a standard device. It is normally set at 1.5 times the rated current of the transformer.
- In transformers with regulation on the high-voltage side and coarse winding arrangements, extremely high-voltage stresses can occur at the inner insulation of the diverter switch (arcing switch) of the resistor-type LTC during impulse testing when the LTC is in mid-position (Figure 14.41). Up to 25% of the incoming wave for BIL tests or 40% for chopped-wave tests can appear over the said distance. Critical values could be reached above a BIL of 550 kV.
- There are two principles to protect the arcing switch from undue overvoltages. Spark gaps or non-linear resistors could be installed in series to the transition resistors, as shown in Figure 14.42. The spark gap is a safe overvoltage protection for applications in medium-size power transformers. Nonlinear resistors are solutions for high-power transformers and for all transformers where the service conditions would cause the spark gaps to respond frequently.

In the early stages, silicon carbide (SiC) elements were installed. The specific characteristics of this material did not allow full-range application. When high-power zinc-oxide (ZnO) varistors came on the market, the application of these elements for overvoltage protection was studied in detail with good results. For more than 30 years, ZnO varistors have been in use with excellent field experience.

www.EngineeringEbooksPdf.com

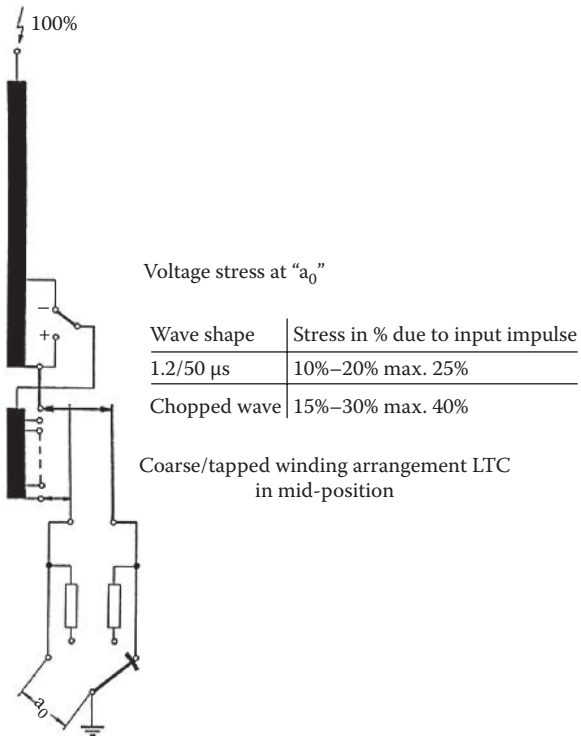

FIGURE 14.41 Voltage stress between selected and preselected tap of coarse/tapped winding arrangement, LTC in mid-position.

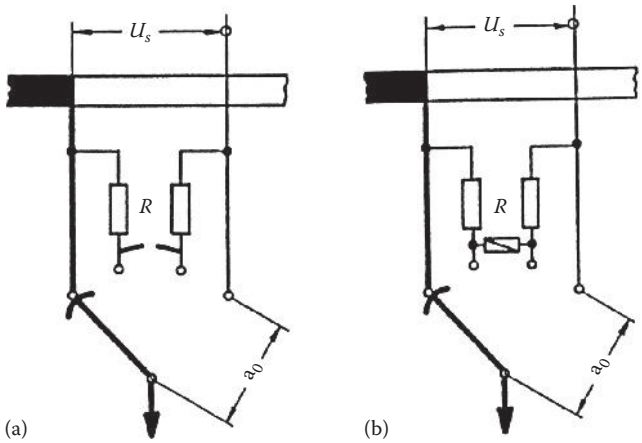

FIGURE 14.42 Overvoltage protection devices arranged within the diverter switch (arcing switch). (a) Spark gap. (b) Non-linear resistance.

14.12 Maintenance of Load Tap Changers

LTC maintenance is the basis for the regulating transformer's high level of reliability. The background for maintenance recommendations is as follows:

For LTCs where oil is used for arc quenching, the arcing at the diverter switch (arcing switch) or selector switch (arcing tap switch) contacts causes contact erosion and carbonization of the

www.EngineeringEbooksPdf.com

arcing switch oil. The degree of contamination depends upon the operating current of the LTC, the number of operations, and, to some degree, the quality of the insulating oil. For LTCs using vacuum interrupters for arc quenching, contact life of the vacuum interrupters and the mechanically stressed parts of the device are the key indicators for the maintenance recommendations. The overall performance of vacuum-type LTCs leads more and more toward maintenance-free LTC designs.

Maintenance and inspection intervals depend on the type of LTC, the LTC rated through-current, the field experience, and the individual operating conditions. They are suggested as periodical measures with respect to a certain number of operations or after a certain operating time, whichever comes first.

The recommended maintenance intervals for an individual LTC type are given in the operating and inspection manuals available for each LTC type. The maintenance criteria for LTCs with vacuum switching technology differ from those of the conventional LTCs with arcing in oil. Today, the maintenance interval is in most vacuum-type LTCs only dependent on the number of operations without any time limitation.

Normally, maintenance of an LTC can be performed within a few hours by qualified and experienced personnel, provided that it has been properly planned and organized. In countries with tropical or subtropical climate, the humidity must also be taken into consideration. In some countries, customers decide to start maintenance work only if the relative humidity is less than 75%.

Economical factors are taken more and more into consideration by users of large power transformers in distribution networks when assessing the operating parameters for cost-intensive operating equipment. While users are aiming at cost reduction for transformer maintenance, they are also demanding higher system reliability. Besides the new generation of LTCs with vacuum switching technology, modern supervisory concepts on LTCs (LTC monitoring) offer a solution for the control of these divergent development tendencies. Today, a few products that differ significantly in their performance are on the market.

A state-of-the-art LTC on-line monitoring system should include an early-fault-detection function and information on condition-based maintenance, which requires an expert system of the LTC manufacturer. The data processing and visualization should provide information about status-signal messages, trend analyses, and prognoses. Monitoring application is a judgment of transformer size and importance and of maintenance and equipment costs.

14.13 Refurbishment and Replacement of Load Tap Changers

With regard to system planning of power utilities, the lifetime of regulating transformers is normally assumed to be about 30 years of service. The actual lifetime is, however, much longer. Due to economic aspects and aging networks, as well as the requirement to improve reliability, refurbishment/replacement is becoming a major policy issue for utility companies.

Refurbishment includes a complete overhaul of the regulating transformer plus other improvements regarding loading capability, an increase in insulation levels, a decrease in noise levels, and the possible replacement of the bushings and of the LTC or a complete overhaul of the LTC. This overhaul should be performed by specialists from the LTC manufacturer in order to avoid any risk when judging the condition of the LTC components, when deciding which components have to be replaced, and with regard to the disassembly and the reassembly as well as the cleaning of insulation material.

The replacement of an old risky LTC (for which neither maintenance work nor spare parts are available) by a new LTC may economically be justified, compared with the expenses for a new regulating transformer, even if the transformer design has to be modified for that reason. The manufacturer of the new LTC must, of course, guarantee maintenance work and spare parts for the foreseeable future.

www.EngineeringEbooksPdf.com

14.14 Smart State-of-the-Art Regulating Unit for LTCs

The introduction of the IEC 61850 series of standards paved the way for standardization of digital communication between monitoring, protection, and control technology devices. On the other hand, a standardized digital connection of the primary devices via a process bus is now also possible for the first time. For one thing, this produces new ways of networking information within the switchgear system right down to the network control point. Digital communication is advantageous in comparison to today's usual parallel cabling if a large amount of information is being distributed. For example, this allows the many pieces of information from voltage regulating relays and also monitoring devices to be integrated in the protection and control technology. Bus communication can also provide a good alternative over long, star-configured cabling. And for another thing, electronic measuring converters can also be connected for the first time via a standardized digital interface. This means that the entire time-critical flow of information of a protection device can also be performed digitally.

14.14.1 Communication Technology

A switched Ethernet as per IEEE 802.1Q with a transmission capacity of 100 Mbit/s is usually used for the described demands on data transmission. This permits individual messages to be prioritized and the network to be divided up into virtual networks (VLAN: Virtual Local Area Network).

The IEEE has specified type identifiers which have worldwide validity for data packets for the transmission of measured values as well as for the transmission of time-critical messages and commands per GOOSE messages (generic object-oriented substation event).

The scanned values to be transferred can thus be transmitted much faster and with higher priority and, at the same time, are available as multicast data packets for several recipients.

However, time-critical data transmissions such as sampled values and GOOSE messages (e.g., protective-off command) are transmitted with the highest priority.

14.14.2 Distributed Functions

Even though the IEC 61850 standard is primarily a standard for the communication of the switchgear device, experience from implemented projects shows that use of distributed functions always requires the integration of additional devices. The function of voltage regulation as it is shown in Figure 14.43 is one example.

Here, the function distribution must be defined first for the physical devices. In addition, it must be specified who communicates with whom and which objects and services will be used to handle this communication. Finally, the functional specifications must be defined concerning how the devices are to react to certain states.

The standardized data models of standard sections IEC 61850-7-3 and 7-4 can be used to model these functional assignments.

The advantage here is the possible use of devices of different manufacturers for the same functions for similar projects. User-defined modeling is a prerequisite for this. This can be used to significantly reduce the engineering effort connected with modeling and, at the same time, possible use of replacement devices is simplified, if a malfunction occurs.

14.14.3 Synchronization

In addition to amplitude accuracy and fast data transmission, the transmission sequence and the synchronization of the sampling are of central importance to the processing of measured values from the different converters or merging units.

www.EngineeringEbooksPdf.com

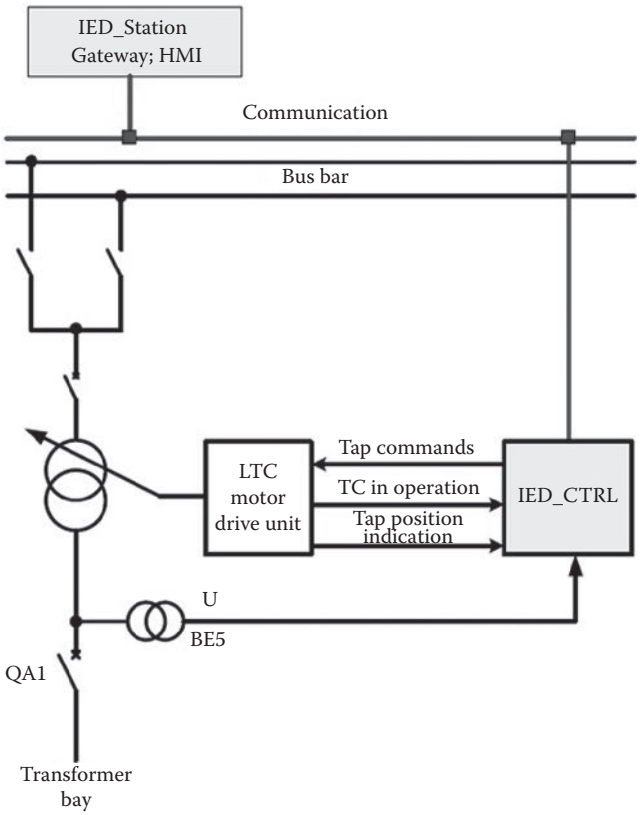

FIGURE 14.43 Automatic LTC controller-system overview. (From FGH e.V, Research Project InterOp, Mannheim, Germany, pp. 110–115, 2009.)

Since the measured values (e.g., for performance calculations and protective functions) are used, frequent measured values from different sources must be calculatively combined.

All scanning devices must be connected to one synchronous timer which can provide time signals with an accuracy of 1 μs.

In order to provide global synchronization, with the control technology with IEC61850—Interface, a GPS-synchronized clock is connected via fiber optic to all scanning devices of one substation.

A highly accurate time signal is emitted every second via this special data connection. The device-internal clock of the individual devices is synchronized with this time signal. This time pulse can also be directly transmitted via the Ethernet network if this uses the procedure specified by IEEE 1588 (Standard for a Precision Clock Synchronization Protocol for Networked Measurement and Control Systems).

14.14.4 Tests

Process bus technology also requires new procedures for tests. The individual devices have no longer physically to be disconnected from the secondary system (e.g., by test/operation switches), but the test procedure can be carried out preferably digitally via configuration. The standard provides various parameters for this. On the one hand, this can be used to put the devices into various states (On, Blocked, Test, Test-Blocked, Off). On the other hand, the data packets can also be marked as test messages. A connected test device can then send scanning values with test identification on the bus which are only processed by the test piece when it is in test mode.

www.EngineeringEbooksPdf.com

14.14.5 Basic Communication Structure: Mode Description

A voltage regulating relay (VRR) is used for automatic voltage control of transformers with motor-driven OLTCs.

The motor drive mechanism receives the corresponding control signals from the automatic tap changer controller. As a consequence of these control signals, the tap changer unit moves to the next position, and the transformer's voltage value is adapted to the preset reference voltage level.

A device configuration description must be prepared for the device-specific data points and presettings.

Normally, this *ICD* (*I*ED *C*onfiguration *D*escription) file can be downloaded from the automatic voltage controller itself.

Furthermore, the Model Implementation Conformance Statement (MICS) and the Protocol Implementation Conformance Statement (PICS) will be prepared by the manufacturer.

In general, there are two possible different operation modes for this *IED* (*I*ntelligent *E*lectronic *D*evice):

Automatic mode: Switching operations are controlled and initiated via the automatic tap-change controller regarding the measured voltage level (Figure 14.44).

Manual mode: Switching operations are forced by the user or others, for example, SCADA client, hard wired signal (Figure 14.45).

To allow individual adaption of the control system to the various field service conditions encountered, influencing variables such as

- Time delay
- Voltage set point value
- Bandwidth
- Line or load-dependent parameters for compensating voltage drops
- Different voltage or current-dependent limits

can be programmed.

As a special feature, the voltage controller is also capable of controlling parallel transformer operation.

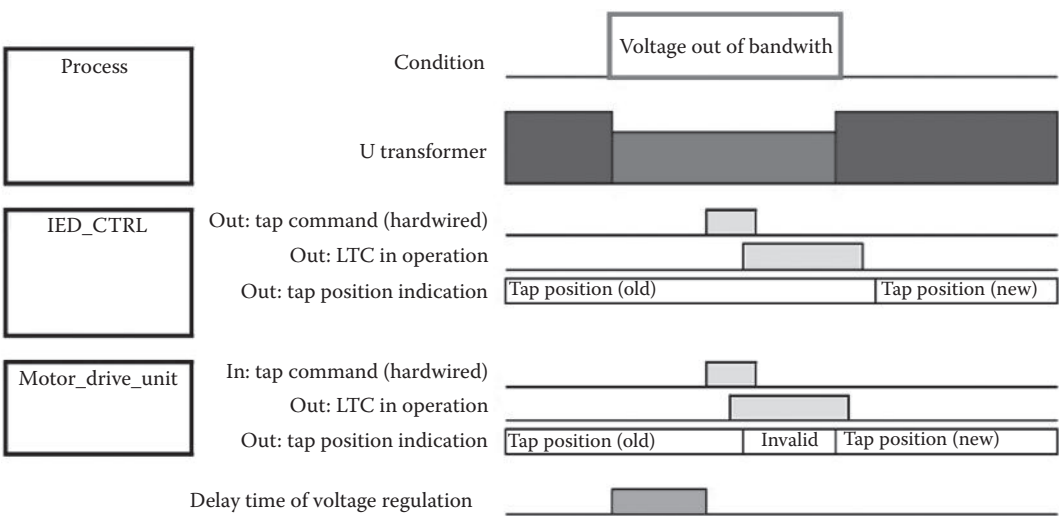

FIGURE 14.44 Automatic LTC controller—sequence chart [TC TCC1]. (From FGH e.V, Research Project InterOp, Mannheim, Germany, pp. 110–115, 2009.)

www.EngineeringEbooksPdf.com

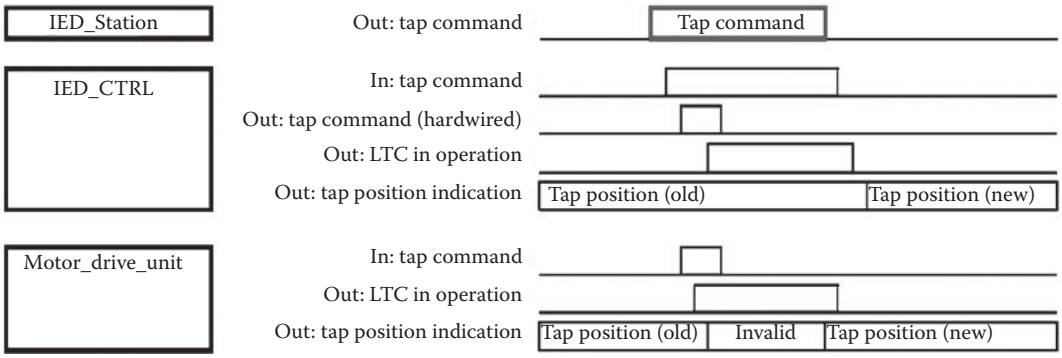

FIGURE 14.45 Automatic LTC controller—sequence chart [TC TCC2]. (From FGH e.V, Research Project InterOp, Mannheim, Germany, pp. 110–115, 2009.)

One of these advanced algorithms is described in the next chapter of this book.

The principal schematic for a generic *a*utomatic *v*oltage *r*egulating *r*elay (AVR) is shown in Figure 14.43.

14.14.6 Device Parameter Configuration

Figure 14.43 illustrates the schema of the intelligent electronic devices (IED_Station) within the substation and the automatic voltage regulator controls (IED_CTRL) and the needed necessary connection to the process.

The device parameterization can be set via software tools like an MMS explorer (manufacturing message specification) or via parameter files prepared from the vendor.

14.14.7 Definition of General Precondition

In order to start each use case in a defined condition, the following settings have to be initiated:

- IED_CTRL in manual regulation mode.
- IED_CTRL in remote control mode.
- Used voltage reference set to nominal voltage (V_{Ref1} = 120 V and active).
- VT (Voltage Transformer) measured voltage within set bandwidth (bandwidth [2% of nominal voltage level] = 100 … 135 V).
- Signalized tap position is valid and within LTC tap range.
- Communication between corresponding clients is working properly.
- Simulation equipment is prepared, adapted, and working properly.
- No error is reported by the device itself.

ATCC (Automatic Tap-Change Control) *in automatic mode* [*TC TCC1*]

Goal: Tap-change operation initiated by IED_CTRL itself

Summary: The AVR relay should force a tap-change in order to raise/lower the bus bar voltage back into permissible bandwidth.

ATCC (Automatic Tap-Change Control) *in manual mode* [*TC TCC2*]

Goal: Tap-change operation initiated by client

Summary: The AVR is forced to change the tap position in order to raise/lower the OLTC tap position.

www.EngineeringEbooksPdf.com

TABLE 14.2 Automatic Voltage Controlling Relay—Process Interface

Data	IDE_CTRL
Current value, input BE1, single phase, optional	A1
Voltage value, input BE5 phase-to-phase or phase-to-neutral voltage	A1
Tap commands (HW) to the motor drive unit	BO
TC in operation signal from the motor drive	BI
Tap position indication from the motor drive	BI

Source: From FGH e.V, Research Project InterOp, Mannheim, Germany, pp. 110–115, 2009.

TABLE 14.3 Automatic Voltage Controlling Relay—Communication Interface IEC 61850 Client/Server

	IEC 61850 Data				IED_CTRL	IED_Station
Use Case Data	IED_LD	LN	Data	CDC		
IED_CTRL U transformer	<IED_CTRL><LD>	ATCC	CtlV	MV	Server reporting	Client
IED_CTRL tap position	<IED_CTRL><LD>	ATCC	TapChg.valWtr.transInd	BSC	Server reporting	Client
IED_CTRL TC*) in operation	<IED_CTRL><LD> <IED_CTRL><LD>	ATCC ATCC	TapChg.valWtr.transInd MotDrv.stVal	BSC SPS	Server reporting	Client
IED_CTRL tap command	<IED_CTRL><LD>	ATCC	TapChg.ctlVal	BSC	Server	Client command

Source: From FGH e.V, Research Project InterOp, Mannheim, Germany, pp. 110–115, 2009.

14.14.8 Data Requirements for IEC 61850 Automatic Voltage Regulating Relay—Interfaces

The time requirements are uncritical in case of voltage regulation. Response times below 2 s are sufficient. That means, because of the operating time of the LTC, there is no real time data transmission system required (Tables 14.2 and 14.3).

14.15 Advanced Method for the Operation of LTC Controls of Transformers in Parallel

The purpose of this chapter is to provide power transformer paralleling user with an easily accessible, intelligent method of transformer paralleling and proper LTC control.

This "circulating reactive current method by equalizing the calculated power factor" makes it possible to provide all the electrical parameters required for the control of parallel-operating transformers with simple instrument transformer circuits, and it can be also used in IEC 61850 substation designs (Figure 14.46).

In advancement to minimum circulating reactive current control method, all the measured values required from the current and voltage transformers involved in the use of voltage regulating relays are processed mathematically.

The necessary data exchange is done by simple bus system between the controllers.

The method is suitable for transformers with approximately equal rated powers, voltage ratings, short-circuit voltages, and connection symbols, with balanced or unbalanced step voltages.

www.EngineeringEbooksPdf.com

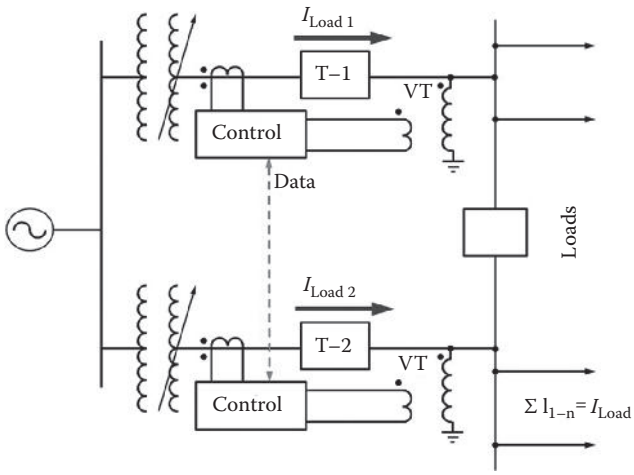

FIGURE 14.46 Basic diagram for the circulating reactive current method by equalizing calculated transformer power factor.

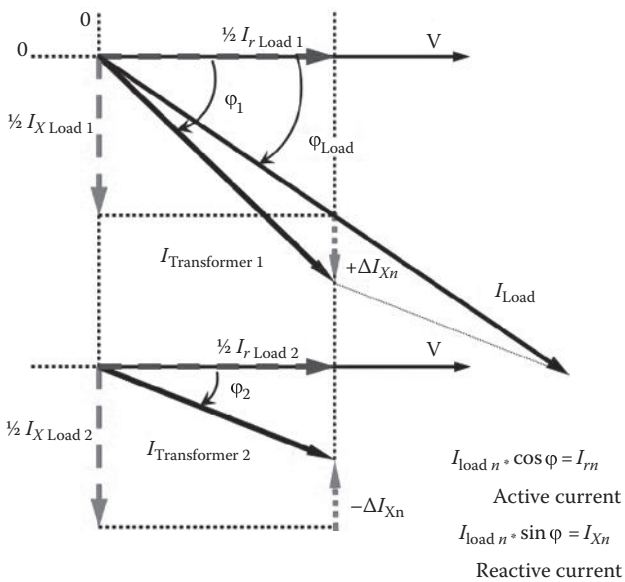

FIGURE 14.47 Phasor relationship of two transformers in parallel, operating on unequal voltage taps.

Here, the reactive current I_X and active current I_r parts are calculated from the transformer apparent load current $I_{\text{load } n}$.

The reactive current I_X and active current I_r can be displayed as vectors, polarity, and angle magnitude (Figure 14.47).

Hence, the following equations are all that are needed to calculate:

$$I_{\text{load}\,n} * \cos\varphi = I_{rn} \text{ the active current}$$

$$I_{\text{load}\,n} * \sin\varphi = I_{Xn} \text{ the reactive current}$$

So the method permits the use of different instrument transformer circuits and is able to handle the paralleling of LTC transformers with different impedances.

www.EngineeringEbooksPdf.com

Same simple calculations are useful for the paralleling of more than two transformers. The next step in the algorithm of the parallel control method is that it is essential to know that each parallel operated transformer has a voltage regulating relay assigned to it.

Each voltage regulator therefore determines the phase angle φ_{load} based on the sum of all active currents and the sum of all reactive currents of all parallel operated transformers:

$$I_{r1} + I_{r2} + I_{r3} + \cdots + I_{rn} = \Sigma I_r$$

$$I_{x1} + I_{x2} + I_{x3} + \cdots + I_{rn} = \Sigma I_x$$

$$\frac{(\Sigma I_x)}{(\Sigma I_r)} = \tan \varphi_{\text{load}}$$

$$\arctan \frac{(\Sigma I_x)}{(\Sigma I_r)} = \varphi_{\text{load}}$$

However, the phase angle of the load φ_{load} is predetermined solely by the electrical properties of the connected load.

Based on the already calculated phase angle of the load φ_{load} in combination with the measured active current I_{rn}, the voltage regulator recognizes the reactive current $I_{Xn\ \text{required}}$ required by the load and the magnitude of the reactive current I_{Xn} contributed by "its" transformer.

So there is no paralleling balance module required, and the method even works with different transformer impedances.

The difference between $I_{Xn\ \text{required}}$ and I_{Xn} represents the control deviation, with respect to the polarity of the aforementioned currents:

$$\Delta I_{Xn} = I_{Xn} - I_{Xn\ \text{required}}$$

This control deviation ΔI_{Xn} is to be minimized by operating the LTC accordingly.

If the control deviation ΔI_{Xn} is $\neq 0$ and the level of the deviation exceeds a predefined limit, the voltage regulating relay operates the LTC to a position at which the reactive current through the transformer is at a minimum.

Since this algorithm is applied on each parallel operated voltage regulating relay of all the transformers involved, all the regulators will move their assigned transformer to an LTC position at which the circulating reactive current ΔI_{Xn} is at a minimum.

Once the control operation has been completed, a minimum circulating reactive current flows through all the parallel operated transformers at any time.

14.16 Parallel Operation of Transformers with Automatic Detection of Switchgear System Topology

The primary job of modern voltage regulating relays is to ensure constant transformer voltage under a wide variety of load conditions by controlling the OLTC.

Additionally, they offer an automatic way to detect the topology of a switchgear system with its circuit breakers and power switches.

This means that these voltage regulating relays are able to recognize the configuration of a switchgear system and adjust its regulation behavior to the present switching state of the switchgear system.

At the same time, these devices can also control the parallel operation of transformers very easily.

www.EngineeringEbooksPdf.com

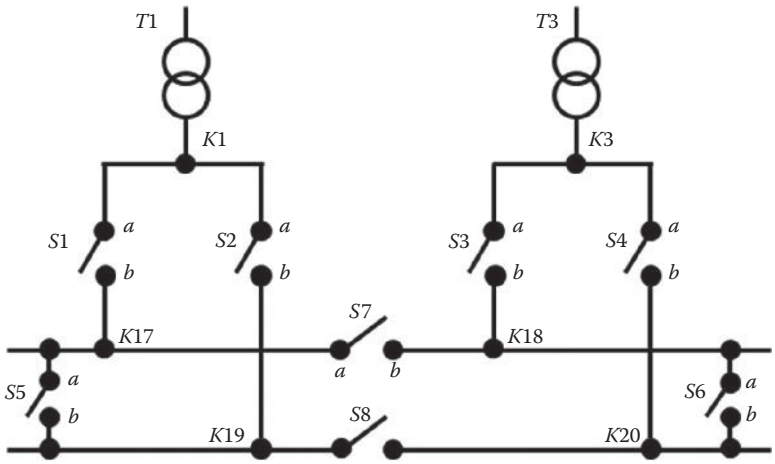

FIGURE 14.48 Topology of a switch gear system for the parallel operation of two transformers.

Such a higher level system with the same hardware as the voltage regulating relay itself can control up to 16 V regulators of the related transformers.

Information exchange between the voltage regulating relays can be performed, for example, via a CAN bus up to a distance of 1 mile.

A simple configuration example of a switchgear system will be used in the following to explain how the software works during parallel operation with switchgear system topology. In the following example diagram, parallel operation of two transformers *T*1 and *T*3 is shown on a double bus bar with longitudinal and cross coupling (Figure 14.48).

Each circuit breaker or disconnector is represented by only one switch. These switches *S* can be used to represent a wide variety of switching states of the system.

The feed-in points of the transformers are designated as *K*1 … 16.

All other connection points (nodes) of the system must be designated beginning with *K*17.

Each switch *S* has connection terminals *a* and *b* with which it can connect to other switches or transformers of the system.

To enable the voltage regulating relay to detect the switching state of a system with its binary inputs, the information about which switch terminals are connected with which connection or feed-in points is stored in the parameter file of the relay.

The parameter table (Table 14.4) for up to 16 switches results from the example, whereby nonexisting switches are just connected to the 0 nodes so that they do not exist for the analysis program of the relay during the subsequent query.

The software of the voltage regulating relay now uses a procedure, which distantly reminds one of the algorithm of a node voltage analysis to determine the switching state of the system so that it will be able to control the parallel operation of the transformers.

After the query of the switches by the relay, each closed switch of the system is internally assigned a number.

By comparing the connection nodes via the closed switches, the software sets up a connection matrix which is then reduced by comparing known connections. This allows the voltage regulating relay to unambiguously identify which transformers are switched in parallel.

Modern voltage regulating relays, which are available today, can recognize the topology of a switchgear system with up to 16 transformers and also recognize and control the parallel operation based on the position of the circuit breakers and power switches of the substation (Figure 14.49).

Furthermore, the transformers of a switchgear system can also now be circuited together as desired into individual groups for parallel operation, for example, transformer 1//transformer 3 and transformer 2//transformer 5//transformer 6.

www.EngineeringEbooksPdf.com

TABLE 14.4 Parameter Table

Parameter		Node
Transformer 1		
Transformer 2		
Transformer 3		
Circuit breaker 1	Terminal a	1
Circuit breaker 1	Terminal b	17
Circuit breaker 2	Terminal a	1
Circuit breaker 2	Terminal b	19
Circuit breaker 3	Terminal a	3
Circuit breaker 3	Terminal b	18
Circuit breaker 4	Terminal a	3
Circuit breaker 4	Terminal b	20
Circuit breaker 5	Terminal a	17
Circuit breaker 5	Terminal b	19
Circuit breaker 6	Terminal a	18
Circuit breaker 6	Terminal b	20
Circuit breaker 7	Terminal a	17
Circuit breaker 7	Terminal b	18
Circuit breaker 8	Terminal a	19
Circuit breaker 8	Terminal b	20
Circuit breaker 9	Terminal a	0
Circuit breaker 9	Terminal b	0
…	…	…
…	…	…
Circuit breaker 16	Terminal a	0
Circuit breaker 16	Terminal b	0

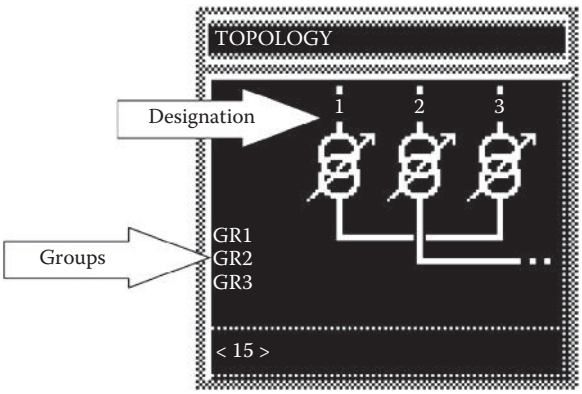

FIGURE 14.49 Topology of transformers switched in parallel displayed on the display of a voltage regulating relay.

www.EngineeringEbooksPdf.com

The transformers shown as symbols are then indicated together with their transformers switched in parallel on the topology side of the display of the voltage regulating relay, and also the transformer designations can be assigned by the user as they also appear in his or her own switchgear system.

A modern voltage regulating relay can thus perform the following tasks:

- Recognize the switching state of the switchgear system with the connected transformers
- Perform all tasks for the parallel control of these transformers
- Show the current topology of the system on its display

14.17 Summary

For the time being, no alternative to regulating transformers is expected. The tap changer will therefore continue to play an essential part in the optimum operation of electrical networks and industrial processes in the foreseeable future.

With regard to the future of LTC systems, one can say that a static LTC, without any mechanical system and consisting only of power electronics, leads today to extremely uneconomical solutions, and this will not change in the near future. Therefore, the mechanical LTC will still be used.

Conventional tap changer technology has reached a very high level and is capable of meeting most requirements of the transformer manufacturer. This applies to the complete voltage and power fields of today, which will probably remain unchanged in the foreseeable future. It is very unlikely that, due to new impulses given to development, greater power and higher voltages will be required.

Today, the main concern goes to service behavior as well as reliability of tap changers and how to keep this reliability at a consistently high level during the regulating transformer's life cycle.

At the present time and for the foreseeable future, the proper implementation of the vacuum switching technology in LTCs provides the best formula of quality, reliability, and economy achievable toward a maintenance-free design in the field of LTCs. The vacuum switching technology entirely eliminates the need for an on-line filtration system and offers reduced downtimes with increased availability of the transformer and simplified maintenance logistics. All this translates into substantial savings for the end user. Consequently, today's design concepts of LTCs—resistor- and reactor-type LTCs—are based more and more on vacuum interrupters. The vacuum switching technology—used in LTCs—is in fact state-of-the-art design of today and tomorrow.

The development of new alternative liquids for the use in transformers and tap changers will not be stopped yet. With the vacuum switching technology in LTCs, those liquids can be used. Today, mainly regulating transformers up to the medium range (<100 MVA) are available with alternative insulating liquids used, for example, in offshore applications like wind farms and drilling platforms. Due to the increased demand, those applications may be extended to transformers and tap changers with higher ratings in the future.

As an option to alternative insulating liquids, dry-type distribution transformers with regulation have been available for several years. The LTC is operating in air with vacuum interrupters. These transformers are used for indoor application with extreme fire hazard and/or pollution requirements, existing in metropolitan and special industrial areas.

A completely new subclause was created in the segment of intelligent controls for LTCs. This refers to the combination of motor drives and voltage regulating relays and their advanced operating algorithm for parallel control of transformers and data transfer in substation environment.

In addition to that, this new standard IEC 61850 offers best chances for striking a new path and integrating innovative solutions.

In any case, a symbiosis is being created by the smart control system according to IEC 61850 and the coaction of the controlled or monitored LTC. This symbiosis is impressive by its compactness and expandability. System-relevant data can be transferred and analyzed on different levels and subscribers.

This also will lead to a higher flexibility and reliability in the operation of LTCs in future.

www.EngineeringEbooksPdf.com

References

Dohnal, D. and Krämer, A., Vacuum switching technology in on-load tap changers becomes state of the art for regulating transformers, *Proceedings of the 14th Conference of the Electric Power Supply Industry*, T2A1, Fukuoka, Japan, 2002.

Dohnal, D., Krämer, A., and Shen, D., HVDC-applications significantly improved by the use of the new generation of on-load tap changers with vacuum switching technology, *Proceedings of the 16th Conference of the Electric Power Supply Industry*, Mumbai, India, pp. 1382–1392, 2006.

Dohnal, D. and Kurth, B., Vacuum switching, a well proven technology has found its way into resistance-type load tap changers, *IEEE Transmission and Distribution Conference Proceedings*, Atlanta, 2001.

FGH e.V., Research Project InterOp, Report, Mannheim, Germany, pp. 110–115, 2009.

Goosen, P.V., Transformer accessories (on behalf of Study Committee 12), CIGRE, pp. 12–104, 1996.

Haude, J., Viereck, K., Mainka, M. et al., "Smart switchgear" using IEC standard 61850—First experience gained with a pilot project in a 380/110 kV substation, CIGRÈ 2010, Paper B3_301_2010, 2010.

IEC, Tap changers—Part 1: Performance requirements and test methods, IEC 60214-1:2003, International Electrotechnical Commission, Geneva, Switzerland, 2003.

IEC, Tap changers—Part 2: Application guide, IEC 60214-2:2004, International Electrotechnical Commission, Geneva, Switzerland, 2004.

IEC, Communication networks and systems for power utility automation, IEC 61850, Edition 2.0:2010, International Electrotechnical Commission, Geneva, Switzerland, 2010.

IEEE, *Standard Requirements for Load Tap Changers*, IEEE Std. C57.131-1995, Institute of Electrical and Electronics Engineers, Piscataway, NJ, 1995.

IEEE, *Guide for the Application, Specification, and Testing of Phase-Shifting Transformers*, IEEE Std. C57.135-2001, Institute of Electrical and Electronics Engineers, Piscataway, NJ, 2001.

Krämer, A., *On-Load Tap-Changer for Power Transformers, Operation, Principles, Applications and Selection*, MR Publication, Regensburg, Germany, 2000, ISBN 3-00-005948-2.

Krämer, A. and Ruff, J., Transformers for phase angle regulation, considering the selection of on-load tap changers, *IEEE Trans. Power Deliv*., 13(2), 518–525, April 1998.

Preininger, G., Phase-Shifting Transformers, *Electric Power Transformer Engineering*, Chap. 4, Harlow, J.H., Ed., CRC Press, Boca Raton, FL, 2004.

Reininghaus, U. and Saemann, D., Schalten im Vakuum—das bewährte Schaltprinzip für die Mittelspannung, *etz* H.12, 14–17, 1997.

Saemann, D., Vakuumschalttechnik—Prinzip für das nächste Jahrzehnt, *etz Elektrotech. + Autom*. 120 H. 6, 26–29, 1999.

Schaefler, T., Viereck, K. et al., Process communication in switchgear according to IEC 61850—Architectures and application examples, CIGRÈ 2008, Paper B5_106_2008, 2008.

Slade, P.G., Vacuum interrupters: The new technology for switching and protecting distribution circuits, *IEEE Trans. Ind. Appl*., 33(6), 1501–1511, 1997.

www.EngineeringEbooksPdf.com

15

Loading and Thermal Performance

15.1 IEEE Loading Guide Approach to Modeling Transformer Temperatures and Seasonal Ratings **15**-1
Refined Analysis • Numerical Procedure
15.2 Design Criteria **15**-11
15.3 Nameplate Ratings **15**-12
15.4 Other Thermal Characteristics **15**-13
15.5 Thermal Profiles **15**-13
15.6 Temperature Measurements **15**-15
15.7 Predicting Thermal Response **15**-17
15.8 Science of Transformer Loading **15**-20
15.9 Water in Transformers under Load **15**-21
Dielectric Effects of Moisture in Oil • Bubble Evolution
15.10 Loading Recommendations **15**-22
References **15**-23

Robert F. Tillman Jr.
Southern Company Services Inc.

Don A. Duckett
HD Supply-Utilities

15.1 IEEE Loading Guide Approach to Modeling Transformer Temperatures and Seasonal Ratings

The nameplate rating for a transformer is a design criterion. For a 65°C rise design, ANSI/IEEE C57.12.00 limits the maximum rise over ambient to no greater than 65°C when the transformer is loaded to the nameplate rating. This test is done under factory or laboratory conditions during a heat run load as specified in guidelines provided by the C57 standards.

For a 55°C rise design, the average winding should not exceed 55°C rise over ambient. A 55°C rise unit with 65°C upgraded insulation will have about 12% additional load capacity if operated as a normal 65°C rise design.

The ANSI/IEEE C57.91 Guide for Loading Mineral-Oil-Immersed Transformers provides the methodology to calculate the oil temperatures and the hottest-spot temperatures and estimate the expenditure of insulation life expected during a specified load/ambient cycle for a specified transformer design. Clause 7 of this guide provides a "simplified" calculation methodology. This procedure, called the "1945 equations," is straightforward. Given the TORr (rated top-oil rise above ambient), the TORu (ultimate top-oil rise) is expressed as

$$\mathrm{TORu} = \left(\frac{(\mathrm{TORr} \times K^2 + R)}{R + 1} \right)^n \tag{15.1}$$

www.EngineeringEbooksPdf.com

where
K is the per-unit load
TORu is the ultimate TOR for several time constants
TORr is the TOR at the nameplate rating load
R is the ratio of the transformer losses (no-load and load loss)
The oil exponent n is between 0.7 and 1.0 (typically 0.8)

This expression provides the ultimate TOR above an ambient temperature that a given transformer with a rated TOR above ambient will reach if loaded to a load of K for period of time exceeding several time constants. For most liquid-filled transformers, the top-oil time constant is several hours.

Similarly to Equation 15.1 earlier, the (rated hottest-spot gradient) HSGr can be used to calculate the ultimate hottest-spot gradient (which is the rise of the hottest spot above the top-oil temperature rise):

$$\mathrm{HSGu} = \mathrm{HSGr} \times \mathrm{K}^{2m} \tag{15.2}$$

where
K is the per-unit load
HSGu is the ultimate hottest-spot temperature gradient above the top-oil temperature
HSGr is the hottest-spot gradient above the TOR at rated load
The winding exponent m is between 0.8 and 1.0 (typically 0.8)

15.1.1 Refined Analysis

Given a daily (repeating) load and ambient profiles, and the top-oil and winding time constants, it is possible to calculate the temperatures of the top oil and hottest spot for any point of time during a cycle. Dividing the daily profiles into intervals (i) of time, if the load K is rising, the instantaneous TOR (TORi) for each interval of time is calculated as

$$\mathrm{TORt} = \mathrm{Ti} + (\mathrm{Tu} - \mathrm{Ti}) \times (1 + e^{-t/tc}) \tag{15.3}$$

Or, if the load K is falling,

$$\mathrm{TORt} = \mathrm{Tu} + (\mathrm{Ti} - \mathrm{Tu}) \times e^{-t/tc} \tag{15.4}$$

where
TORt is the instantaneous TOR for the specific moment of time
Tu is the ultimate top-oil temperature rise at the load Ki
Ti is the initial top-oil temperature rise at the end of the previous moment in time
t is the interval of time (hours)
tc is the oil time constant (hours)

Similarly, the instantaneous hot-spot gradient HSGi, would be (for load rising)

$$\mathrm{HSGt} = \mathrm{gi} + (\mathrm{gu} - \mathrm{gi}) \times (1 + e^{-t/wtc}) \tag{15.5}$$

And, for load falling,

$$\mathrm{HSGt} = \mathrm{gi} + (\mathrm{gu} - \mathrm{gi}) \times (1 + e^{-t/wtc}) \tag{15.6}$$

www.EngineeringEbooksPdf.com

where

HSGt is the instantaneous hot-spot gradient (HSG) for the specific moment of time
gu is the ultimate HSG at the load Ki
gi is the initial HSG at the end of the previous moment in time
t is the interval of time (hours)
wtc is the winding time constant (typically 0.05–0.25 h [3–15 min])

Then, the hottest-spot temperature is then calculated for each time interval:

$$HSt = AMBt + TORt + HSGt \tag{15.7}$$

This is best calculated using a computer program as the cycle needs to be repeated enough times (usually about three or more) to stabilize the results. A reasonable approach would be to repeat the calculation until the starting temperatures are within ±1° from the previous cycle.

Note that during the cycle, the time constants for both the winding and oil change based on the initial to the ultimate points within each time segment. Refer to Clause 7 of the guide for more details.

The following examples will use the Clause 7 calculations to establish the seasonal rating examples making a few comparisons to the Annex G methodology when needed. A visual basic–based program is available from the author to investigate and compare both approaches if needed. Annex G includes a listing of BASIC code for this calculation using a slightly more complicated approach using the winding-duct oil temperatures. Note that this method can, under some situations, result in higher calculated hottest-spot temperatures. Both approaches are being investigated.

15.1.2 Numerical Procedure

15.1.2.1 Getting Started

Since they are needed for the calculations of both Clause 7 and Annex G of C57.91, where do you get values for the rated TOR and HSG? Since the interest is to determine the top rating values, the best estimates of these values at the top rating level are needed. Additionally, needed are values for the no-load and load losses. If Annex G is to be used, an estimate of the value of the bottom-oil rise (BOR) is required. Here, an infrared thermometer may be of help by scanning near the tank bottom.

The top-oil time constant is calculated from the weight of the interior (untanking weight), the tank and fittings, the oil gallons, and the type of cooling. For power transformers, these values are usually available on the nameplate. While the oil time constant is typically a few hours and the previously mentioned data can be used to provide a useful number, the winding time constant is usually in the range of a few minutes (generally 3–15 min) and is usually much shorter than the time intervals provided in the load/ambient profiles. An estimate of 3–15 min is usually fine.

When available, the best source of these data are the manufacturer's reports, preferably on the specific transformer to be studied and, if possible, from a heat run test on the unit being studied.

There does not seem to be much consistency in format between manufacturers, and the older the unit, the more difficult it may be to gather these data. The TORs needed are the ultimate values of the top oil above the ambient when the unit is operated at each stage of cooling, and in particular, at the top rating. Also needed is the hottest-spot gradients at these ratings.

The HSG, that is, the temperature rise of the hottest spot above the top oil, is sometimes not obvious as some reports present the average winding rise (AWR) above ambient. For disk wound construction, one can estimate that the HSG is about 1.1 times the gradient between the AWR and the TOR. For wound coil type of construction, typically used in distribution type windings but available for smaller size power units, the multiplier would be about 1.5 times.

For future fleet management purposes, a good recommendation would be to establish a collection of the best known values for these parameters for all critical units in the fleet.

www.EngineeringEbooksPdf.com

15.1.2.2 Estimating TOR and HSG Values

What would you use if you have very limited data? For a 65°C AWR transformer, the default TOR would be about 55°C above ambient. For disk wound construction, typical construction in most standard power type units, the hottest-spot gradient at the base rating would then be about 1.1 × (65–55) or about 11°C. Most units known to the author in actual reports are below these values at the "base" rating.

The standard power cooling ratings for most power transformers are of the multiples 1.000/1.333/1.667 for the base stage, stage 1, and stage 2 cooling states.

Which means that for this type of construction with all cooling ON, properly maintained, and working correctly, the unit will be able to operate at 1.667 times the base rating while the cooling system is designed to maintain the TOR to a level at or below the base level reading, or in this example, 55°C.

Depending on the type of cooling (fans or pumps), the hottest-spot gradient may not be able to achieve this level of adjustment, and at the top rating, this gradient may rise significantly higher as the losses will typically increase with the square of the load, that is,

$$HSG_t = HSGb \times 1.667^2 \tag{15.8}$$

where HSGb is the basis HSG. Using this approximation, we could estimate the TOR at stage 1 and stage 2 cooling levels to be maintained to 55°C rise while the HSG_0 = 11°C, HSG_1 = 19.5°C, and HSG_2 = 30.5°C.

15.1.2.3 Setting Recommended Top Ratings

While Clause 8 of C57.91 describes loading recommendations for distribution transformers, Clause 9 describes the limitations and recommendations for power transformers. In addition, Annex C of the guide presents a specific example of setting ratings and may prove useful.

Note that these are all "recommendations," and it is the users' responsibility to determine the limitations or "acceptable risk levels" for their application(s).

15.1.2.3.1 Limitations

Additional factors such as altitude, harmonics, restricted cooling locations (such as vaults, walls, or enclosures), equipment age and condition, previous load history and events, condition assessment including DGA and insulation history, and/or loss of cooling equipment and overall maintenances should be considered.

For power transformers, Clause 9 guide suggests the maximum allowable load is two times the top nameplate rating while the maximum top oil should not exceed 110°C with a maximum allowable hottest-spot temperature of 180°C. Depending on the moisture content in the paper, gas evolution may become an issue when the temperatures exceed 130°C–140°C (see Annex A).

In order to set loading recommendations, thermal data for the transformer and the profiles for the annual load and ambient temperatures for the application are required.

Consider the design characteristics for a 90/120/150 MVA 230–69 kV ONAN/ONAF/ONAF autotransformer recently installed in Central Florida.

The no-load losses provided on the manufacturers' report for this unit are listed at 53.21 kW with the load losses at the ONAN rating of 153,919 kW. The design and thermal ratings are listed as follows (Table 15.1):

The seasonal model used to make the ratings assessment for this example divides the year into six seasons, that is, summer (SUM), winter (WIN), spring/fall (SF), and the extremes for each. The ambient temperature data are available from the National Climatic Data Center in Ashville, NC. A disk is available for 260 cities in the United States where data were collected in hourly increments from 1990 to 1995. This example is for a location near Tampa, FL (Figure 15.1).

DPY (days per year) is the days estimated for each season. This can be used to calculate a value for annual life usage.

www.EngineeringEbooksPdf.com

TABLE 15.1 Thermal Characteristics 90/120/150 MVA Transformer

Ratings	90 MVA	120 MVA	150 MVA
AWR (°C)	65	65	65
TOR (°C)	35	39	42.4
HSG (°C)	15.8	21	27.3
BOR (°C)	23		

Total weight = 379,900 lbs; Interior = 174,400 lbs; Tank and fittings = 87,300 lbs; Oil volume = 15,911 gal; Top-oil time constant = 6.1 h; Hot-spot time constant = 5 min; Oil exponent n = 0.9; Winding exponent m = 0.8.

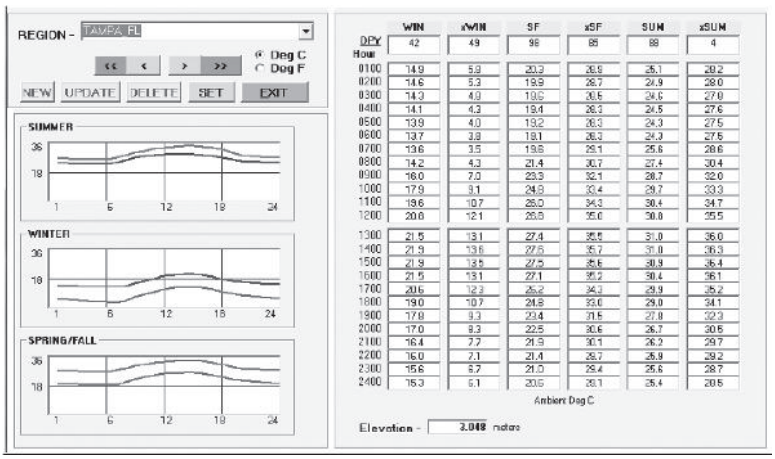

FIGURE 15.1 Annual ambient profile for Tampa, Florida.

The load profiles used in these studies are derived from user provided load data tables, typically of supervisory control and data acquisition (SCADA) data records, for multiple years in 1 h increments. The load selected for this example is from a similar load on an autotransformer in the Central Florida area. Over 3 years of collected data, in 1 h increments, was provided to generate this load profile data. The seasonal profile is similar to the ambient data. For this study, two load types will be considered (Figure 15.2).

The LsF (loss factor) is the RMS equivalent loading for the seasonal load profiles. For normalized hourly per-unit loading (Figure 15.3),

$$\mathrm{LsF} = \frac{{}^{\circ}\mathrm{K}^2}{24} \tag{15.9}$$

15.1.2.3.2 Setting Normal Life Expectancy Loading

Clause 9 of the loading guide suggests the maximum hottest spot for normal life expectancy would not exceed the range between 110°C and 120°C (Figure 15.4).

For example, using a target hottest spot of 115°C for all seasons for the previous transformer with the *Type I load* (distribution substation type of load), we can produce a *ratings table* (Table 15.2).

Type II is the loading profile more typical of a "Generation" or "Industrial" type of load (Table 15.3). Type II will be used for the remaining examples.

www.EngineeringEbooksPdf.com

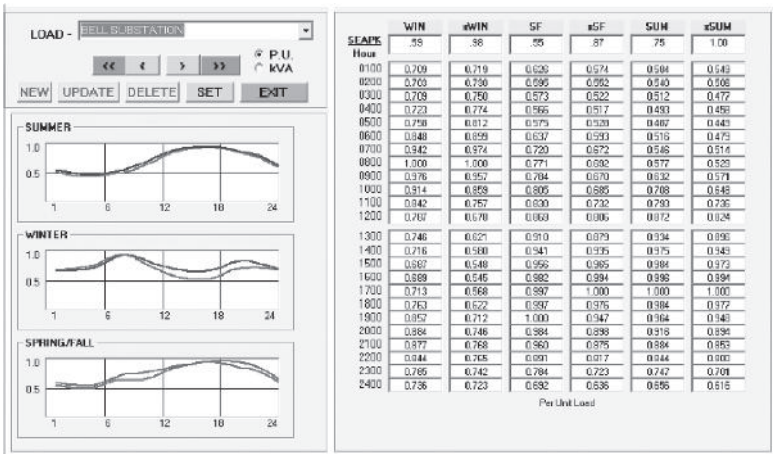

FIGURE 15.2 Annual per-unit load profile–Type I (distribution/residential type load LsF = 0.58–0.70).

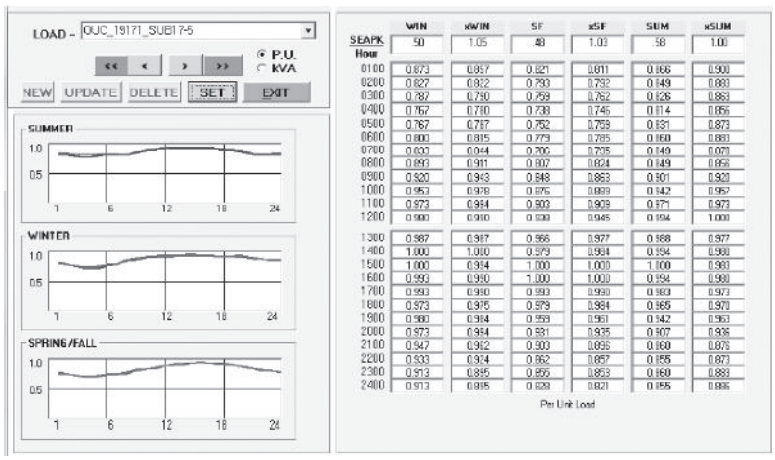

FIGURE 15.3 Annual per-unit load profile–Type II (industrial/generation type load LsF = 0.80–0.87).

For *older transformers*, lower-hot-spot targets can be used to suggest lighter loading guidelines, for example, if 115°C is the target hot spot for a new transformer, then one might chose 105°C (normal –10) or even 95°C (normal –20) to generate rating guidelines for an aged unit (Tables 15.4 and 15.5).

15.1.2.3.3 Loss of Cooling

In the event the cooling system is not functioning properly, the ratings may need to be reduced. For example, if the second-stage cooling is not available for the unit mentioned earlier, the normal ratings would be limited to first-stage cooling only (Tables 15.6 and 15.7).

15.1.2.3.4 Planned Loading beyond Nameplate Rating

For the case of planned loading beyond nameplate (PLBN) ratings, the load is allowed to be increased until the maximum hottest spot does not exceed a range between 120°C to 130°C (Table 15.8 using a target of 125°C).

15.1.2.3.5 Long-Time Emergency Loading

For the case of long-time emergency (LTE) rating, the daily load cycle is allowed to increase for a period of time (days, weeks, or even months) to allow arrangements to be made to adjust the loading in the

www.EngineeringEbooksPdf.com

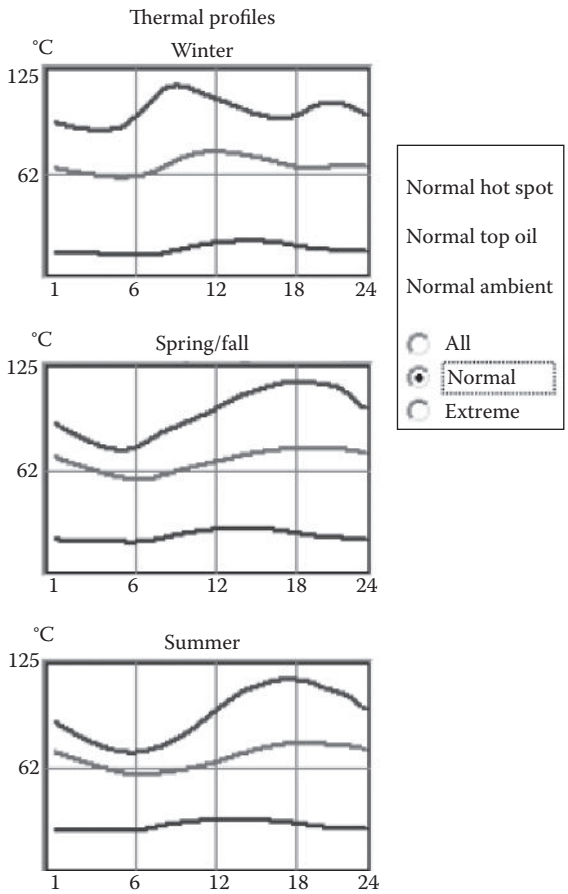

FIGURE 15.4 Seasonal hottest spot, top oil, and ambient temperatures.

TABLE 15.2 Rating Table for Type I Load

Season	Load	TopRat	MaxTO	MaxHS	FEQA	LsF
WIN	209,839	1.399	75.5	115	11.654	0.677
XWIN	224,457	1.496	70.2	115	6.818	0.594
SF	189,891	1.266	75.3	115	13.703	0.709
XSF	181,297	1.209	78.3	115	10.859	0.627
SUM	186,638	1.244	77.0	115	11.737	0.633
XSUM	181,359	1.209	78.6	115	10.075	0.585

future while the users remain in service today. Here, the maximum hottest spot suggested by Clause 9 would not be allowed to exceed the range between 130°C and 140°C (Table 15.9). For this example using a target hottest spot of 135°C for all seasons for the previous transformer, we get the following table:

In this case, it is recognized that accelerated life expenditure is a risk, and it would be a good recommendation to take DGA readings often during this event. On-line gas monitoring would be a good idea.

15.1.2.3.6 Short-Term Emergency Loading

The short-term emergency (STE) case allows a short-term switching contingency for significant short-term overload intervals. For this rating, the maximum hottest spot suggested by Clause 9 would not exceed the range between 140°C and 160°C (Tables 15.10).

www.EngineeringEbooksPdf.com

TABLE 15.3 Rating Table for Type II Loading

Season	Load	TopRat	MaxTO	MaxHS	FEQA	LsF
WIN	188,967	1.260	75.8	115	17.411	0.881
XWIN	199,650	1.331	72.5	115	17.444	0.891
SF	184,582	1.231	77.1	115	14.778	0.811
XSF	172,242	1.148	81.0	115	15.715	0.817
SUM	176,666	1.178	79.7	115	17.388	0.862
XSUM	169,587	1.131	82.8	115	18.688	0.888

TopRat = p.u. top rating; MaxTO = maximum top oil (°C); MaxHS = maximum hottest spot (°C); FEQA = equivalent aging factor (hours per daily cycle); 1 ANSI life = 65,000 h (PT).

TABLE 15.4 Normal (115°C) – 10°C Ratings

Season	Load	TopRat	MaxTO	MaxHS	FEQA
WIN	175,085	1.167	70.2	105	6.252
XWIN	186,379	1.243	66.8	105	6.208
SF	170,041	1.134	71.6	105	5.412
XSF	156,967	1.046	75.6	105	5.796
SUM	162.036	1.080	74.2	105	6.397
XSUM	154,387	1.029	77.2	105	6.825

TABLE 15.5 Normal (115°C) – 20°C Ratings

Season	Load	TopRat	MaxTO	MaxHS	FEQA
WIN	160,520	1.070	64.7	95	2.151
XWIN	172,557	1.150	61.3	95	2.122
SF	154,693	1.031	66.4	95	1.910
XSF	140,755	0.938	70.4	95	2.065
SUM	146,502	0.977	68.8	95	2.260
XSUM	138,158	0.921	71.8	95	2.275

TABLE 15.6 Normal Rating with Stage 1 Cooling Only

Season	Load	TopRat	MaxTO	MaxHS	FEQA
WIN	167,340	1.116	79.5	115	17.565
XWIN	176,530	1.177	76.7	115	17.497
SF	163,765	1.092	80.6	115	14.937
XSF	153,052	1.020	84.0	115	15.914
SUM	156,710	1.045	83.0	115	17.565
XSUM	150,392	1.003	85.8	115	18.850

Before starting the run for this example, a preload of 80% (for this example) top rating is applied prior to the contingency peak. Then a switching peak is applied. The peak is limited to a maximum of two times top rating as long as the hottest spot does not exceed the maximum allowed limit. Also, for-this example, after the 15 min surge peak, a 45 min ramp down period is added with a contingency adder of 1.4 times the base rating (Figure 15.5).

Note that for this event, Annex G can show higher-hot-spot intervals than shown with the Clause 7 methodology. Additional studies need to be done to verify both calculation procedures.

www.EngineeringEbooksPdf.com

TABLE 15.7 Normal Rating with No Cooling (ONAN)

Season	Load	TopRat	MaxTO	MaxHS	FEQA
WIN	139,528	0.930	83.4	115	17.565
XWIN	147,255	0.982	80.8	115	17.616
SF	136,670	0.911	84.3	115	14.884
XSF	127,901	0.853	87.3	115	15.799
SUM	130,995	0.873	86.4	115	17.498
XSUM	125,885	0.839	88.9	115	18.688

TABLE 15.8 PLBN Rating

Season	Load	TopRat	MaxTO	MaxHS	FEQA
WIN	202,024	1.347	81.4	125	45.7
XWIN	212,131	1.414	78.2	125	45.9
SF	198,137	1.321	82.6	125	38.0
XSF	186,441	1.243	86.4	125	40.3
SUM	190,310	1.269	85.2	125	44.6
XSUM	183,746	1.225	88.4	125	48.9

TABLE 15.9 LTE Rating

Season	Load	TopRat	MaxTO	MaxHS	FEQA
WIN	214,476	1.430	87.0	135	114.6
XWIN	224,108	1.494	83.9	135	115.6
SF	211,142	1.408	88.1	135	94.1
XSF	199,881	1.333	91.9	135	99.1
SUM	203,413	1.356	90.9	135	110.8
XSUM	197,211	1.315	94.0	135	122.5

TABLE 15.10 STE Rating

Season	InitLoad	InitTopRat	MaxTO	MaxHS	FEQA	TopRat	Start	Finish
WIN	120,000	0.8	57.0	135.2	0.155	2.000	1600	1615
XWIN	120,000	0.8	48.7	126.3	0.053	2.000	1600	1615
SF	120,000	0.8	61.4	139.6	0.226	2.000	1600	1615
XSF	120,000	0.8	69.8	148.0	0.642	2.000	1600	1615
SUM	120,000	0.8	65.9	144.2	0.451	2.000	1600	1615
XSUM	120,000	0.8	71.5	147.6	1.950	2.000	1600	1615

As the short-term ratings can exceed the two times top rating limit before reaching the thermal limits, it would be prudent to verify the ratings capabilities of the bushings and other connected equipment such as load tap changers (LTCs).

For this short time period example, the calculated temperature limitations are generally the two times (2×) peak load. The insulation life is small but the impact on bushings, connections, and switches should be considered.

15.1.2.3.7 Altitude Adjusted Ratings: Normal Life Expectancy

As the altitude increases, the cooling ability of a transformer decreases. Table E2 of Annex E of C57.91 provides guidelines for nameplate rating correction factors for altitudes greater than 1000 m (3300 ft).

www.EngineeringEbooksPdf.com

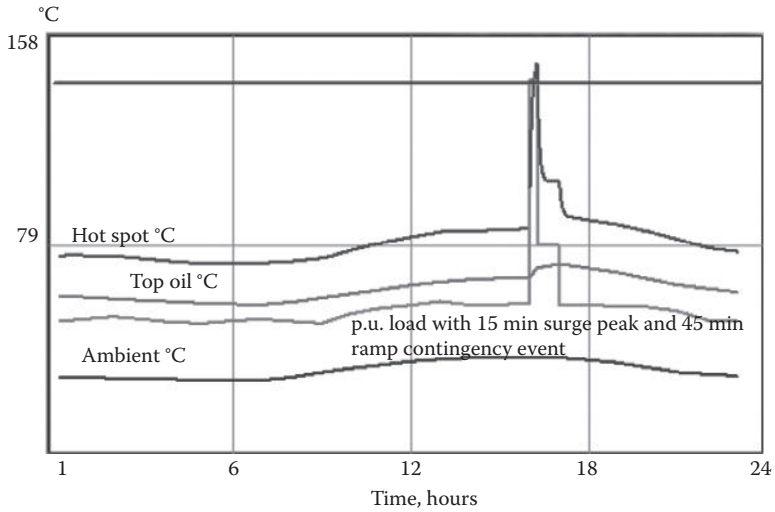

FIGURE 15.5 15 minute STE (short term emergency) contingency peak.

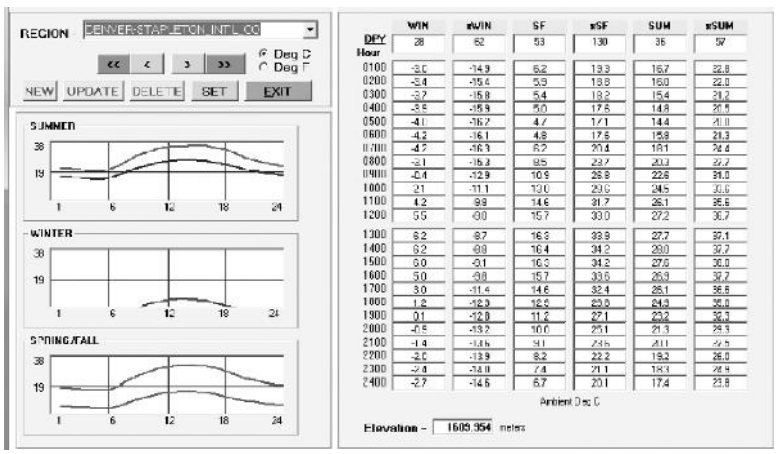

FIGURE 15.6 Ambient temperature data for Denver, Colorado (1609 meters).

Applying this rule for the earlier 150 MVA transformer, using Annex E of the guide, the nameplate top rating would be adjusted to about 145 MVA if it were relocated to the Denver Stapleton International Airport at 1610 m (5282 ft) (Figure 15.6).

The normal ratings in Denver limited to 115°C hottest spot would be (Table 15.11):

TABLE 15.11 The Normal Ratings for Denver Limited to 155°C Hot Spot

Season	Load	NPTopRat	MaxTO	MaxHS	FEQA
WIN	204,442	1.363	68.4	115	15.205
XWIN	221,716	1.478	62.5	115	17.854
SF	195,017	1.300	71.8	115	13.012
XSF	170,321	1.135	80.2	115	12.830
SUM	176,884	1.179	78.0	115	15.004
XSUM	163,073	1.087	83.4	115	15.760

www.EngineeringEbooksPdf.com

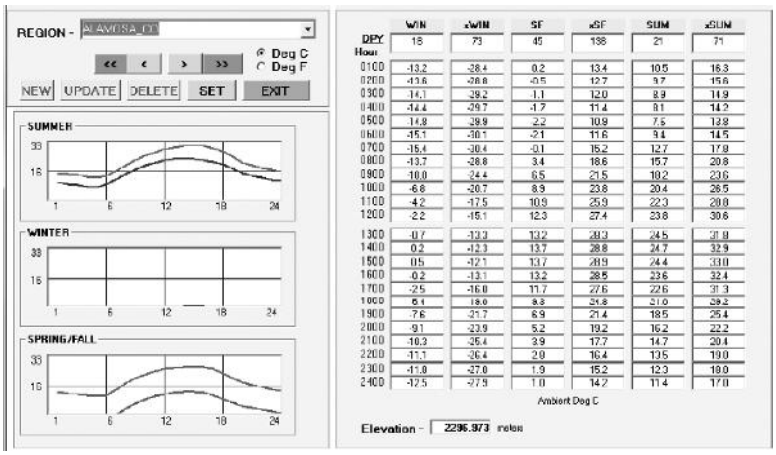

FIGURE 15.7 Ambient temperature data for Alamosa, Colorado (2296 meters).

Or taking the same unit to Alamosa, Colorado, at 2297 m (7536 ft) where the nameplate top rating is adjusted to 140 MVA (Figure 15.7).

The normal ratings in Alamosa limited to 115°C hottest spot would be (Table 15.12):

TABLE 15.12 The Normal Ratings for Alamosa Colorado Limited to 115°C

Season	Load	NPTopRat	MaxTO	MaxHS	FEQA
WIN	205,067	1.367	66.2	115	12.711
XWIN	218,871	1.459	61.1	115	12.190
SF	192,755	1.285	70.6	115	11.628
XSF	172,417	1.149	77.9	115	12.152
SUM	176,195	1.175	76.6	115	13.898
XSUM	165,442	1.103	81.1	115	14.254

Note that although we experience degraded cooling capacity recognized in Annex E as we increase altitude, the ambient temperatures are generally cooler, and the ratings may increase accordingly.

Note, however, the dielectric capability may also be reduced at these altitudes, and this should be taken into consideration as well.

15.2 Design Criteria

ANSI standards collection for the C57 series sets forth the general requirements for the design of power transformers. With respect to loading, the requirements of concern are those that define the transformer's thermal characteristics. The average ambient temperature of the air in contact with the cooling equipment for a 24 h period shall not exceed 30°C, and the maximum shall not exceed 40°C (IEEE, 1994). For example, a day with a high temperature of 35°C and a low of 25°C has an approximate average ambient temperature of 30°C.

The average winding temperature rise above ambient shall not exceed 65°C for a specified continuous-load current (IEEE, 1994). The industry uses this criterion rather than the more relevant

www.EngineeringEbooksPdf.com

hot-spot temperature rise because manufacturers can obtain it by simply measuring the resistance of the windings during temperature-rise tests. The manufacturer must guarantee to meet this requirement.

The hottest-conductor temperature rise (hot spot) in the winding shall not exceed 80°C under these same conditions (IEEE, 1994). This 80°C limit is no assurance that the hot-spot rise is 15°C higher than the average winding temperature rise. In the past, using the 15°C adder to determine the hot-spot rise produced very conservative test results. The greatest thermal degradation of cellulose insulation occurs at the location of the hottest spot. The hot-spot location is near the top of the high- or low-voltage winding. The most common reason for hot spots to occur is that these regions have higher localized eddy losses because the leakage flux fringes radially at the winding ends.

Standards specify requirements for operation of the transformer above rated voltage. At no load, the voltage shall not exceed 110% (IEEE, 1994). At full load, the voltage shall not exceed 105% (IEEE, 1994). Modern transformers are usually capable of excitation beyond these limits without causing undue saturation of the core. However, this causes the core to contribute greater than predicted heating. Consequently, all temperature rises will increase. While not critical at rated load, this becomes important when loading transformers above the nameplate rating.

15.3 Nameplate Ratings

The transformer nameplate provides the voltage (excitation) rating for all tap positions. If a transformer has a four-step de-energized high-voltage tap changer (DETC) and a 32-step LTC on the low-voltage winding, then it has 5 primary voltage ratings and 33 secondary voltage ratings. The excitation limits apply to all ratings.

The cooling class affects the design of the cooling package. Different cooling classes have different thermal profiles. Therefore, gauge readings can be different for equivalently rated transformers under the same loading conditions. Consequently, the operator must understand the cooling classes and their thermal profiles in order to confirm that a given transformer is responding properly.

ONAN cooling uses natural air flow through the radiators to dissipate heat. (See Chapter 2 for description of cooling classes.) ONAF cooling uses fans to force air through radiators in order to substantially increase the rate of cooling. There is natural flow by convection of the oil in the radiators from top to bottom with both ONAN and ONAF cooling. There may additionally be pumps used to draw the hot oil out of the top of the transformer and force it through the radiators into the bottom of the tank. If the design incorporates a cooling duct that directs the oil from the radiator outlet directly through the winding from bottom to top, it is classified as ODxx (Pierce, 1993).

Medium-size power transformers, 12 MVA and larger, commonly have three stages of cooling, that is, natural convection plus two stages of forced air through the radiators. Large power transformers usually employ directed-flow cooling to the main windings. Some large power transformers, especially generator step-up (GSU) transformers, are rated for only forced oil and air cooling; the nameplate reveals no rating unless the auxiliary cooling equipment is operating.

The nameplate kVA (or MVA) rating is the continuous load at rated voltage that produces an average winding temperature rise within the 65°C limit and hot-spot temperature rise within the 80°C limit (IEEE, 1994). The rating of each cooling stage is given. The transformer design must meet temperature-rise guarantees for each cooling stage. Operators and planners generally express loading capability as a percent (or per unit) of the maximum MVA rating.

The windings contribute most of the heat that produces the temperature rises. The winding heat results mostly from the I^2R loss in the conductor. When users express loading as a percent on an MVA basis, they are assuming that the transformer is operating at rated voltage, both primary and secondary. Operators should express the load for thermal calculations as a percent (or per unit) of the full-load current for a given set of primary and secondary tap positions (Tillman, 1998).

www.EngineeringEbooksPdf.com

15.4 Other Thermal Characteristics

Other thermal characteristics are dependent on the design, loss optimization, and cooling class. Top-oil temperature is the temperature of the bulk oil at the top of the tank. Users can directly measure this with a gauge mounted on the transformer tank. The temperature of the oil exiting the oil duct in the top of the winding is actually the important characteristic (Chew, 1978; Pierce, 1993). Users normally do not have a direct measurement of this in practice. Manufacturers can measure this during heat run tests, but that is not common practice.

For transformer cooling stages with natural oil flow cooling (ONAN or ONAF), the bulk top-oil temperature is slightly less than the oil temperature of the oil exiting the ducts. For transformer cooling stages with directed forced oil flow (ODAF), the bulk top-oil temperature is also slightly less than the oil temperature of the oil exiting the ducts. For transformer cooling stages with nondirected forced oil flow (OFAF), the bulk top-oil temperature is much less than the temperature of the oil exiting the ducts.

BOR is the temperature rise above ambient of the oil entering the bottom of the core and coil assembly. In all cooling classes, the bottom-oil temperature is approximately equal to the temperature of the oil exiting the radiators (Chew, 1978; Pierce, 1993). Manufacturers can easily measure it during heat run tests and provide the information on certified test reports. Users should require manufacturers to provide this information. In service, users can glean a measurement of the bottom-oil temperature with an infrared camera.

Average oil rise (AOR) is the key oil thermal characteristic needed to calculate the winding gradient (WG) (Chew, 1978). It is approximately equal to the average of the temperature rise of oil entering the bottom of the core and coil assembly and the oil exiting the top. The location of the average oil is approximately equal to the location of the mid-winding.

The WG is the difference between the average winding and average oil temperature rises (Chew, 1978). Designers assume that this gradient is the same from the bottom to the top of the winding except at the ends, where the hot spot exists. The HSG is somewhat higher than the WG. Designers calculate this gradient by determining the effects of localized eddy losses at the end of the winding. Computers allow designers to calculate this very accurately. An engineer can obtain an estimate of the HSG by multiplying the WG by 1.1 (Chew, 1978). Recent data have shown this multiplier to be as high as 1.3 depending on the specific design characteristics.

15.5 Thermal Profiles

Thermal profiles show the relationships between different temperatures inside a transformer. Operators must understand these thermal profiles for given cooling classes in order to understand a transformer's thermal response to a given load. A plot of winding temperature vs. its axial position in the tank is a thermal profile.

For ONxx cooling, the oil temperature outside the winding is approximately equal to the oil temperature inside the winding from bottom to top (Chew, 1978). This is due to the oil movement by natural convection both inside and outside the core and coil assembly. The oil temperature exiting the bottom of the radiators approximately equals that entering the bottom of the core and coil assembly (Chew, 1978; Pierce, 1993). The top-bulk-oil temperature approximately equals the oil temperature at the top of the winding (IEEE, 1995). It is relatively easy for engineers to determine the gradients for this cooling class. They can verify that a transformer is responding properly to a given load by obtaining load information, reading the top-oil temperature gauge, measuring the bottom-oil temperature by use of an infrared camera, and comparing with calculations and data from the manufacturer's test reports (Figure 15.8).

BOR (Bottom Oil Rise) – Bottom oil temperature rise (K) above ambient
AOR (Average Oil Rise) – Average oil temperature rise (K) above ambient
TOR (Top Oil Rise) – Top oil temperature rise (K) above ambient

www.EngineeringEbooksPdf.com

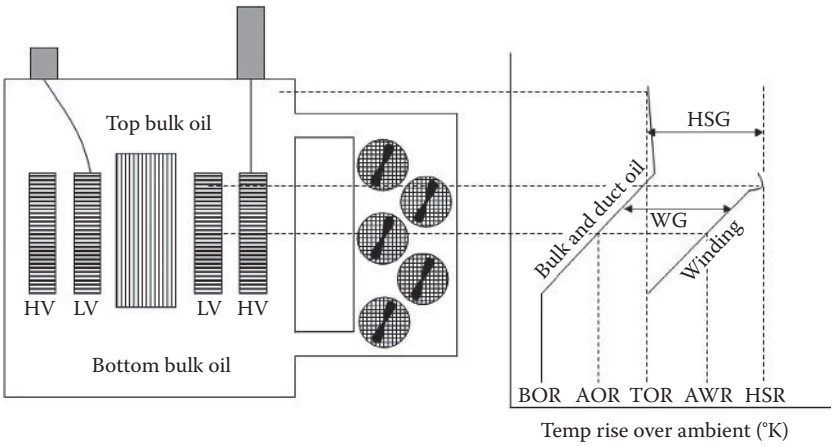

FIGURE 15.8 ONAF thermal profile.

AWR (Average Winding Rise) – Average winding temperature rise (K) above ambient
HSR (Hot Spot Rise) – Winding hot spot temperature rise (K) above ambient
WG (Winding Gradient) – WG is AWR minus AOR
HSG (Hot Spot Gradient) – Winding hot spot gradient is HSR minus TOR

For OFxx cooling, the oil pumps force oil into the bulk oil at the bottom of the tank. The higher rate of flow produces a smaller bottom-to-top temperature differential in the coolers than in the ONxx cooling described earlier. The oil flow in the winding is by natural convection. The pumps circulate cool oil throughout the tank and around the core and coil assembly while only a small portion passes through the windings. Therefore, the temperature profile of the oil internal to the windings does not match that of the external profile. The top winding-duct oil temperature, the key temperature, is much hotter than the top bulk oil (Pierce, 1992, 1993).

The definition of the terms in Figure 15.9 is the same as Figure 15.8. However, note some of the differences. The AOR is the average temperature rise of the bulk oil outside the winding ducts. The average temperature rise of the oil inside the winding is much greater than this value. Also the HSG is greater because it is referenced to the top bulk oil temperature.

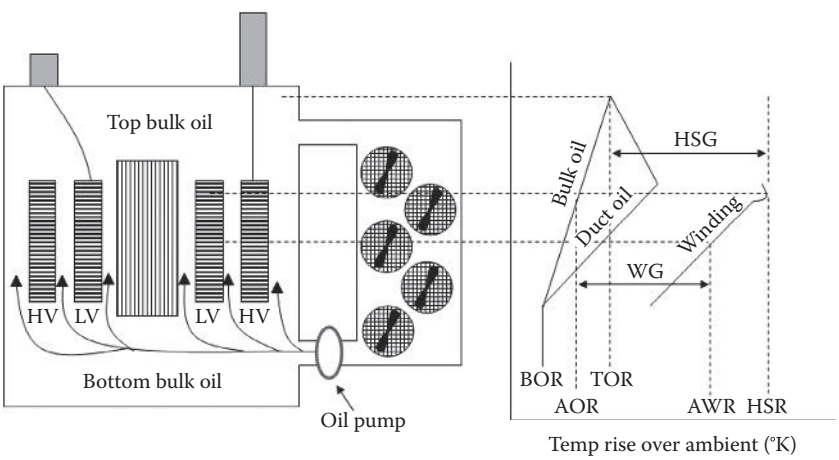

FIGURE 15.9 OFAF thermal profile.

www.EngineeringEbooksPdf.com

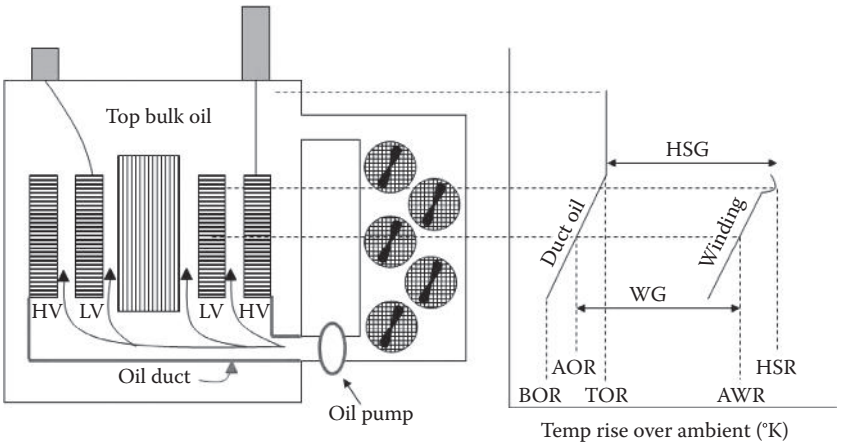

FIGURE 15.10 ODAF thermal profile.

For ODxx directed-flow cooling, the oil pumps force oil through a sealed oil duct directly into the bottom of the core and coil assembly. The oil flows within the winding and exits the top of the winding into the bulk oil. The temperature profile of the oil external to the winding approximately equals that of the oil internal to the winding. The bottom-to-top-oil temperature rise is very small. Top-oil temperature rises for this design are lower than equivalent ONxx designs. The hot-spot temperature is not lower because the HSG is much larger (Pierce, 1992, 1993).

The definition of the terms in Figure 15.10 is the same as Figure 15.8. However, this profile is different from both Figures 15.2 and 15.3. The AOR is the average temperature rise of the duct oil inside the winding ducts. The top-oil temperature is approximately equal to the top duct oil temperature. The difference between BOR and TOR is relatively small (approximately 5 K). The HSG is relatively large (up to 40 K).

15.6 Temperature Measurements

The user specifies the gauges and monitors installed by the manufacturer. The top-oil temperature gauge directly measures the temperature of the top bulk oil. Most oil gauges in service are mechanical and provide instantaneous and maximum temperature readings. They also have contacts for controlling cooling and providing alarms. Some of these gauges are electronic and provide analog and digital outputs for communication by SCADA. This gauge reading is approximately equal to the temperature of the top winding-duct oil for ONxx and ODxx cooling and is much lower for OFxx nondirected-flow cooling (Chew, 1978; Pierce, 1992, 1993; IEEE, 1995).

In most cases, the winding temperature gauge is actually an assembly that simulates the hot-spot winding temperature. This hot-spot temperature simulator measures top bulk oil and adds to it another temperature increment (HSG) proportional to the square of the load current. This incremental temperature is actually a simulation of the HSG. An oil-temperature probe inserted in a resistive well and a current obtained from a bushing-type current transformer (BTCT) in the main winding is a method used for simulating the hot-spot temperature (see Figure 15.11). Designers calibrate the resistor and the current to the HSG. For ODxx directed flow and ONxx cooling, this simulation is valid because the measured top-oil temperature is approximately equal to the top winding-duct oil temperature (Chew, 1978; IEEE, 1995). However, this simulation is not valid for OFxx nondirected-flow cooling because the measured top-oil temperature is less than the top winding-duct oil temperature (Pierce, 1992). It is more difficult to predict and verify the thermal response of a transformer with OFxx nondirected-flow cooling.

www.EngineeringEbooksPdf.com

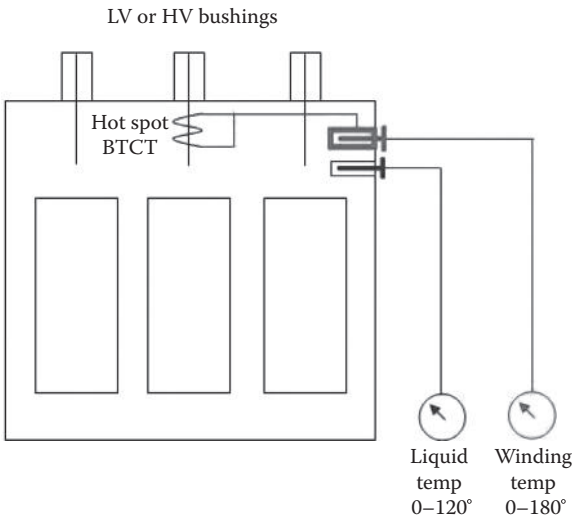

FIGURE 15.11 Electro-Mechanical Gauges.

The hot-spot simulator exhibits its greatest accuracy for constant loads. There is a thermal lag between the top-oil and hot-spot winding temperatures. It takes several hours for the bulk oil to attain its ultimate temperature after a change of the load. On the other hand, the same load change takes only a few minutes to heat up the winding conductors to near their ultimate temperature. Consequently, a transformer must have an applied constant load for several hours for the hot-spot simulator to indicate an accurate measurement. For transient loading, the instantaneous indication is meaningless to an operator. The actual hot-spot temperature is greater for increasing loads than the simulator indicates and lower for decreasing loads (IEEE, 1995).

Users also specify electronic temperature controllers. These have many features built into one box. They include many adjustable alarms and control contacts, both top-oil and calculated hot-spot temperatures, and analog/digital outputs for SCADA. Electronic temperature controllers typically do not simulate the HSG as described earlier. Instead of feeding a resistive well, the hot-spot BTCT feeds into the electronic controller. Designers calibrate the microprocessor in the electronic temperature controller to calculate the HSG. This provides a more reliable indication than mechanical gauges, but it is still a calculation with the same drawbacks discussed earlier (Figure 15.12).

Direct measurements of the hot-spot temperature are possible through application of fiber optics. A sensor inserted in the oil duct between two winding disks replaces a key spacer. Design engineers

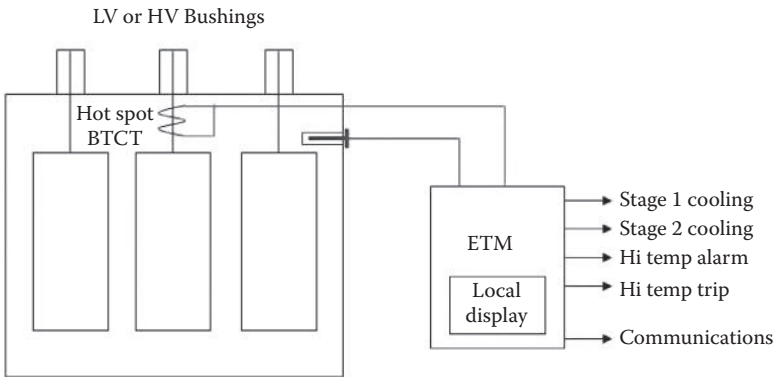

FIGURE 15.12 Electronic temperature controller.

www.EngineeringEbooksPdf.com

determine the locations to install the sensors. Fiber-optic probes transmit the temperature from the sensors to an electronic temperature controller or personal computer. The application of fiber optics also introduces additional risk of internal dielectric failure in the transformer. Fiber-optic sensors have become much more reliable over the years. Use of fiber optics is a good research tool and appropriate for special applications.

15.7 Predicting Thermal Response

The IEEE Std. C57.91-1995, *Guide for Loading Mineral-Oil-Immersed Transformers*, gives detailed formulas for calculating oil and winding temperatures. Section 15.1 of this document provides guidance for using these formulas. Operations personnel must be able to perform detailed thermal analyses for special applications, emergencies, and unforeseen events. For very short-term events, a transformer can be safely loaded way beyond its nameplate rating. However, there are other entities that use transformer loading criteria.

Transmission and distribution planners are also concerned with transformer loading. Loading criteria have a different perspective for planning purposes. Most transformers feed loads that are cyclical in nature. Most of the loading applications are for substations that serve residential, commercial, and light industrial customers. These loads depend on the time of year and time of day. They are also highly influenced by air conditioning and heating. Therefore, peaks occur in the summer and winter. The load is also cyclical during off-peak times of year (fall and spring), but the daily peaks are at a lower level than during summer and winter. A planners' major concern is providing enough capacity to serve summer and winter peak loads.

This load cyclicality is one of the major reasons why it is beneficial and prudent for users to load transformers past their nameplate rating. In the United States, summer peak loading is usually the critical factor. Figure 15.13 shows the shape of a typical 24 h load profile in summer, fall, and spring on a percent basis. For example, a transformer loaded to 120% at its daily peak (approximately 1600) has 54% load at its valley (approximately 0400). The load in this example would exceed the transformer 100% nameplate rating approximately 6 h/day. And the annual peak load does not occur every day during the summer. In the Southeastern United States, a transformer loaded to an annual peak load of 120% might only be loaded past its nameplate rating less than 400 h/year.

Figure 15.14 shows the shape of a typical 24 h load profile in winter. Even if higher than summer peaks, winter loading can usually be neglected because the peak loads occur at extremely low ambient temperatures.

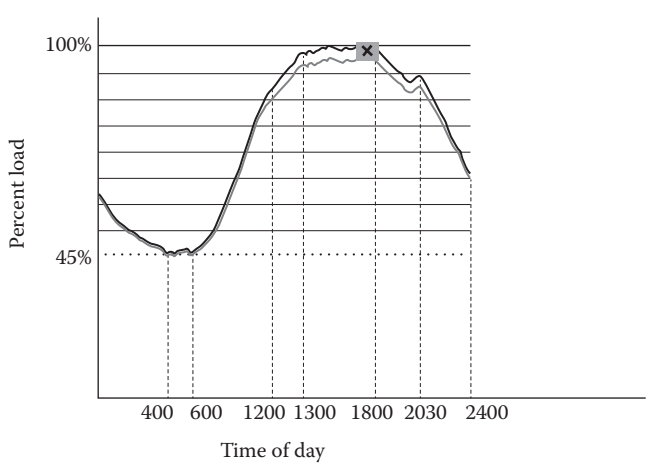

FIGURE 15.13 Summer-fall-spring load profile.

www.EngineeringEbooksPdf.com

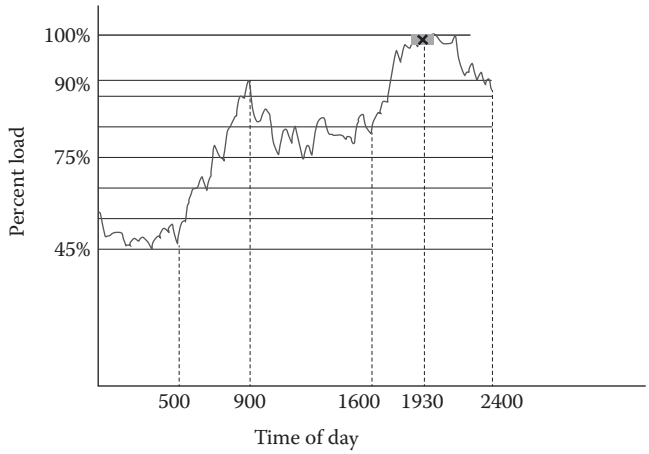

FIGURE 15.14 Winter load profile.

For planning purposes, a much simpler approach to predicting a transformer's thermal response is appropriate. The total losses in a transformer cause the oil temperature to rise for a given load (IEEE, 1995). Total losses include core, load, stray, and eddy losses. The oil temperatures vary directly with the ratio of the total losses raised to an exponent. The industry designation for the oil-rise exponent is n (Chew, 1978; Pierce, 1993; IEEE, 1995):

$$TO_2 = TO_1\left(\frac{TL_2}{TL_1}\right)^n \tag{15.10}$$

where

TO_2 is the ultimate top-oil rise
TO_1 is the initial or known top-oil rise
TL_2 are total losses at ultimate load
TL_1 are total losses at known load

Users can calculate a conservative approximation by neglecting the core, stray, and eddy losses and considering only the i^2r load losses:

$$TO_2 = TO_1\left(\frac{i_2^2 r}{i_1^2 r}\right)^n = TO_1\left(\frac{i_2^2}{i_1^2}\right)^n = TO_1\left(\frac{i_2}{i_1}\right)^{2n} \tag{15.11}$$

The value of n varies with different transformer designs. The industry generally accepts an approximate value of 0.9 for ONAF-class transformers (Chew, 1978; Pierce, 1993; IEEE, 1995). This is a conservative value:

$$TO_2 = TO_1\left(\frac{i_2}{i_1}\right)^{1.8} \tag{15.12}$$

If i_1 is the full-load current rating, then i_2/i_1 is the per-unit current loading. As an example, consider a transformer with ONAF cooling that has a top-oil temperature rise of 55°C at full-load current. Calculate the ultimate steady-state top-oil temperature rise due to a constant 120% load:

$$TO_2 = 55(1.2)^{1.8} = 76^\circ C \tag{15.13}$$

www.EngineeringEbooksPdf.com

If the maximum ambient temperature is 35°C, then the ultimate top-oil temperature is 111°C. The user can find detailed transient equations in IEEE C57.91 and Section 15.1. They appear complex but are only expanded forms of the previous equations.

The key issue is that the engineer must have the ability to predict a transformer's thermal response to a given load (steady state or transient) in order to ensure that the transformer is responding properly. They can use the previous simplified steady-state equations to calculate maximum temperatures reached for a given load cycle. Using a load equal to 90% of a peak cyclical load in the steady-state equations yields a good approximation of the peak temperature for a planner to expect. In the previous example, the expected resultant top-oil temperature for a cyclical 120% load is 98°C. These simplified equations become more valid as the transformer's percent load increases.

The relationships for winding-temperature equations are similar to the oil-temperature equations. The key element is the HSG. Once an engineer calculates this gradient, it is added to the calculated top-oil temperature to obtain the hot-spot temperature. Similar to Equation 15.2, the HSG varies directly with the ratio of the current squared raised to an exponent (Chew, 1978; Pierce, 1993; IEEE, 1995):

$$HSG_2 = HSG_1\left(\frac{i_2}{i_1}\right)^{2m} \tag{15.14}$$

where

HSG_2 is the ultimate HSG
HSG_1 is the initial or known HSG
i_2 is the current at the ultimate load
i_1 is the current at the known or initial load

As with n, the values of m vary between transformers. However, the variance for m is much greater. It is very dependent on the current density and loss optimization used to design a particular transformer. High losses and current densities produce large values of m. Low losses and current densities produce small values for m. For example, a high-loss transformer design may have a lower hot-spot temperature at rated load than a similar low-loss transformer design. However, the low-loss transformer is likely more suitable for loading past its nameplate criteria. The industry generally accepts an approximate value of 0.8 for ONAF-class transformers (Chew, 1978; Pierce, 1993; IEEE, 1995). Again, this is a conservative value:

$$HSG_2 = HSG_1\left(\frac{i_2}{i_1}\right)^{1.6} \tag{15.15}$$

Engineers can calculate the m and n constants by requiring manufacturers to perform overload temperature tests (e.g., 125% load). This, along with temperature data from standard temperature tests, provides two points for calculating these values.

There are limiting elements in a transformer other than the active part. These include bushings, leads, tap changers, and BTCTs. Sometimes it is difficult to determine the bushing rating in older transformers. Infrared scanning can help determine if a bushing is heating excessively. In modern transformers, manufacturers choose bushings with ample margin for overloading the transformer. Insulated leads are also subject to overheating, especially if the manufacturer applies too much insulation. LTC contact degradation can accelerate. For arcing-under-oil tap changers, oil contamination increases. It is also important to know if a transformer includes a series transformer to reduce the LTC current to a manageable value. The user will probably not know the ratio of the series transformer for older transformers.

www.EngineeringEbooksPdf.com

15.8 Science of Transformer Loading

The thermal rating of a power transformer differs from the thermal rating of other current-carrying elements in a substation. Examples of other elements are conductor, buswork, connectors, disconnects, circuit breakers, etc. The insulation system for these elements is air and solid support insulators. The cooling system is passive (ambient air). The thermal limits depend on the properties of the conductor itself. These elements are maximum-rated devices. In a power transformer, the cooling system is active. The thermal limits depend on the dielectric and mechanical properties of the cellulose and oil insulation system. As a maximum-rated device, the transformer capability may be 200% of the maximum nameplate rating (IEEE, 1995).

With overly conservative loading practices, cellulose insulation life due to thermal stress is practically limitless, theoretically more than 1000 years. In practice, deterioration of accessories and nonactive parts limits the practical life of the transformer. These elements include the tank, gauges, valves, fans, radiators, bushings, LTCs, etc. The average, practical life of a transformer is probably 30–50 years. Many fail beyond economical repair before 30 years. Therefore, it is reasonable and responsible to allow some thermal aging of the cellulose insulation system. The key is to identify the risk. Loss of insulation life is seldom the real risk. Most of the time, risks other than loss of insulation life are the limiting characteristics.

Paper insulation must have mechanical and dielectric strength. The mechanical strength allows it to withstand forces caused by through faults. When through faults occur, the winding conductors encounter forces to move. If the paper has sufficient mechanical strength, the coil assemblies will also have sufficient strength to withstand these forces. When aged paper loses its mechanical strength, through faults may cause winding movement sufficient to tear the paper. Physical damage due to excessive winding movement during through-fault conditions reduces the dielectric withstand of the paper insulation. At this point, the risk of dielectric failure is relatively high.

The Arrhenius reaction equation is the basic principle for thermal-aging calculations (Dakin, 1948; Kelly et al., 1988a):

$$L = Ae^{B/T} \tag{15.16}$$

L is the calculated insulation life in hours. A and B are constants that depend on the aging rate and end-of-life definition. They also depend on the condition of the insulation system. T is the absolute temperature in Kelvin (°C + 273) (Kelly et al., 1988a). There are a limited amount of functional life test data available. Most available data are over 20 years old. Past calculations of life expectancy used extremely conservative numbers for the A and B constants (Kelly et al., 1988a).

Normal life of cellulose insulation is the time in years for a transformer operated with a constant 110°C hot-spot winding temperature to reach its defined end-of-life criteria. Degree of polymerization (DP) and tensile strength are properties that quantify aging of cellulose paper insulation (Kelly et al., 1988b). In the past, the industry accepted approximately 7.5 years for normal life. This is a misleadingly low value. Actual practice and more recent studies show that normal life under these conditions is somewhere between 20 years and infinity (IEEE, 1995). It is not important for users to master these relationships and equations. However, the user should understand the following realities:

1. The relationship between life expectancy and temperature is logarithmic (McNutt, 1995). As the hottest-spot conductor temperature moves below 110°C, the life expectancy increases rapidly, and vice versa. An accepted rule of thumb is that the life doubles for every 8°C decrease in operating temperature. It halves for every 8°C increase in operating temperature (Kelly et al., 1988a).
2. Users seldom operate transformers such that the hot-spot winding temperature is above, at, or anywhere near 110°C. Even when peak loads cause 140°C hot-spot winding temperatures, the cumulative time that it operates above 110°C is relatively short, probably less than 200–400 h/year.

www.EngineeringEbooksPdf.com

3. Cellulose aging is a chemical reaction. As in all reactions, heat, water, and oxygen act as a catalyst. In the Arrhenius equation, the A and B constants are highly dependent on the presence of moisture and oxygen in the system (Kelly et al., 1988b). The expected life of the paper halves when the water content doubles (Kelly et al., 1988b; Bassetto et al., 1997). Also, tests indicate that the aging rate increases by a factor of 2.5 when oxygen content is high (Kelly et al., 1988b; Bassetto et al., 1997).

15.9 Water in Transformers under Load

The action of water in the insulation system of power transformers poses one of the major risks in loading transformers past their nameplate rating criteria. The insulation system inside a transformer consists of cellulose paper and oil working together. Water always exists in this system. Indeed, the paper must have some moisture content in order to maintain its tensile strength (Kelly et al., 1988b). However, the distribution of the water in this system is uneven. The paper attracts much more water than the oil (Kelly et al., 1988c). As the transformer cycles thermally throughout its life, the water redistributes itself. The water collects in the coldest part of the winding (bottom disks) and in the area of highest electrical stress (Kelly et al., 1988c). This redistribution of moisture is very unpredictable.

When a transformer is hot due to a heavy load, water moves from the paper to the oil. The heat in the conductor pushes the water out of the paper insulation, while the solubility of water in oil increases with temperature (Kelly et al., 1988b). When the transformer cools, water moves back to the paper. However, the water goes back into the paper much more slowly than it is driven out (Kelly et al., 1988b). As the oil cools, the water in the oil can approach saturation.

As long as changes take place gradually and temperatures do not reach extreme levels, the insulation system can tolerate the existence of a significant amount of water (Kelly et al., 1988b). However, loading transformers to a higher level causes higher temperatures and greater changes during the thermal cycling. Emergency loading causes greater temperature swings than normal loading. The key is to understand the point at which elevated temperatures introduce the risk of failure. That temperature level depends on the moisture content in the insulation system. There are two basic risks associated with the relationship between loading and water in the insulation system:

1. Reduction in dielectric strength due to saturation of moisture in oil
2. Bubble evolution

15.9.1 Dielectric Effects of Moisture in Oil

The dielectric strength of oil is a function of the average oil temperature and percent saturation of water in the oil (Moore, 1997). As long as the oil is hot, the water solubility is high (Kelly et al., 1988b). Therefore, a given amount of water in the oil produces a lower percent saturation at high temperature than at low temperature. As an example, consider a transformer with 1.5% water in the paper. A 100% load on a hot summer day produces a 70°C average oil temperature. The water content of the oil reaches 20 ppm as the moisture is driven from the paper into the oil (Kelly et al., 1988c). The water saturation at this point is 220 ppm, resulting in less than 10% saturation (Kelly et al., 1988b). The dielectric breakdown of the oil as measured by ASTM D1816 method is quite high, approximately 50 kV (Moore, 1997). In the evening, the load and temperature decrease, producing an average oil temperature of 50°C. The saturation level of water in the oil reduces to approximately 120 ppm (Kelly et al., 1988b). Since the oil goes back into the paper slowly, the water in oil is still 20 ppm, resulting in almost 20% saturation, which is still quite low. The dielectric breakdown is somewhat lower, approximately 45 kV (Moore, 1997). This is still quite high and poses no real problem.

Now consider the same example where the peak load increases to 120%. The resultant peak average oil temperature is 90°C, causing the moisture content of the oil to reach 60 ppm (Kelly et al., 1988c). The percent saturation at peak temperature is still less than 10% (Kelly et al., 1988b). However, during the evening, the average oil temperature is 55°C. The water saturation level is 140 ppm, greater than 40% saturation (Kelly et al., 1988b). The dielectric breakdown reduces significantly to approximately 35 kV (Moore, 1997).

www.EngineeringEbooksPdf.com

The conditions in this example should not cause problems, especially if the transformer in question is relatively new. However, the insulation systems in service-aged transformers have properties that magnify the risk illustrated in this example (Oommen et al., 1995). Severe emergency loading can produce higher risk levels, especially if they occur in winter. At 0°C, oil saturates at approximately 20 ppm (Kelly et al., 1988b). There is a point where the probability of failure increases to an unacceptable level.

15.9.2 Bubble Evolution

Bubble evolution is a function of conductor temperature, water content by dry weight of the paper insulation, and gas content of the oil (Oommen et al., 1995). Gas bubbles in a transformer insulation system are of concern because the dielectric strength of the gases is significantly lower than that of the cellulose insulation and oil. When bubbles evolve, they replace the liquid insulation. At this point, the dielectric strength decreases, and the risk of dielectric failure of the major and minor insulation systems increases.

Bubbles result from a sudden thermal change in the insulation at the hottest conductor. In a paper insulation system, there is an equilibrium state between the partial pressures of the dissolved gases in the paper. As temperature increases, the vapor pressure increases exponentially. When the equilibrium balance tips, the water vapor pressure causes the cellulose insulation to suddenly release the water vapor as bubbles (Oommen et al., 1995).

According to past studies, moisture content is the most important factor influencing bubble evolution. The temperature at which bubbles evolve decreases exponentially as the moisture content in the cellulose insulation increases. Increasing content of other gases also significantly influences bubble evolution when high moisture content exists. Increasing content of other gases does not significantly influence bubble evolution at low moisture content (McNutt, 1995). Data show that in a dry transformer (less than 0.5% moisture by dry weight), bubble evolution from overload may not occur below 200°C. A service-aged transformer with 2.0% moisture may evolve bubbles at 140°C or less (Oommen et al., 1995).

15.10 Loading Recommendations

The IEEE loading guide and many published papers give guidelines and equations for calculating transformer loading. In theory, operators can load modern transformers temporarily up to 200% of nameplate rating or 180°C hottest-conductor temperature. These limits are given as a design criteria and not a loading guide. These guidelines provide a tool to help a user understand the relationship between loading and the design limitations of a power transformer. However, understanding the relationship between loading and the general condition of and the moisture in the insulation system, along with voltage regulation, is also important. Unless conditions are ideal, these factors will limit a transformer's loading capability before quantified loss-of-life considerations.

The loading recommendations in Table 15.13 assume that the load is summer and winter peaking, that the fall and spring peak is approximately 60% of summer peak, that the average ambient temperature on a normal summer day is 30°C, that the daily load profile is similar to the cyclical load profile described earlier, that the winter peak is less than 120% of the summer peak, and that noncyclical loading is constant except for downtime:

1. The normal summer loading accounts for periods when temperatures are abnormally high. These might occur every 3–5 years. For every degree that the normal average ambient temperature during the hottest month of the year exceeds 30°C, derate the transformer by 1 percentage point (i.e., 129% loading for 31°C average ambient).
2. The percent load is given on the basis of the current rating. For MVA loading, multiply by the per-unit output voltage. If the output voltage is 0.92 per unit, the recommended normal summer MVA loading is 120%.

www.EngineeringEbooksPdf.com

TABLE 15.13 Loading Recommendations

Type of Load	ONAF[a] Maximum Top-Oil Temperature (°C)	OFAF[a] Maximum Top-Oil Temperature (°C)	Maximum Winding Temperature (°C)	Maximum Load (%)
Normal summer load	105	95	135	130
Normal winter load	80	70	115	140
Emergency summer load	115	105	150	140
Emergency winter load	90	80	130	150
Noncyclical load	95	85	115	110
	ONAF[a]	OFAF[a]		
Alarm settings	65°C rise	65°C rise		
Top oil	105°C	95°C		
Hot spot	135°C	135°C		
Load amps	130%	130%		

[a] See Table 2.2 for a list of fourth letter codes used in cooling-class designations.

3. Exercise caution if the load power factor is less than 0.95 lagging. If the power factor is less than 0.92 lagging, then lower the recommended loading by 10% (i.e., 130%–120%).
4. Verify that cooling fans and pumps are in good working order and oil levels are correct.
5. Verify that the oil condition is good: moisture is less than 1.5% (1.0% preferred) by dry weight, oxygen is less than 2.0%, acidity is less than 0.5, and CO gas increases after heavy load seasons are not excessive.
6. Verify that the gauges are reading correctly when transformer loads are heavy. If correct field measurements differ from manufacturer's test report data, then investigate further before loading past nameplate criteria.
7. During heavy load periods, verify with infrared camera or RTD that the LTC top-oil temperature relative to the main tank top-oil temperature is correct. For normal LTC operation, the LTC top oil is cooler than the main tank top oil. A significant and prolonged deviation from this indicates LTC abnormalities.
8. If the load current exceeds the bushing rating, do not exceed 110°C top-oil temperature (IEEE, 1995). If bushing size is not known, perform an infrared scan of the bushing terminal during heavy load periods. Investigate further if the temperature of the top terminal cap is excessive.
9. Use winding power-factor tests as a measure to confirm the integrity of a transformer's insulation system. This gives an indication of moisture and other contaminants in the system. High-BIL (basic insulation level) transformers require low winding power factors (<0.5%), while low-BIL transformers can tolerate higher winding power factors (<1.5%).
10. If the transformer is extremely dry (less than 0.5% by dry weight) and the load power factor is extremely good (0.99 lag to 0.99 lead), then add 10% to the previous recommendations.

References

Bassetto, A., Mak, J., Batista, R.P., and de Faria, T.A., Economic assessment of power transformer loading, *Doble Conference Proceedings, 64PAIC97*, Boston, MA, 1997, pp. 8–10.

Chew, O., Operation of transformers at loads in excess of nameplate ratings, presented at *IEEE Power Engineering Society Transformer Seminar*, New Orleans, LA, 1978.

Dakin, T.W., Electrical insulation deterioration treated as a chemical reaction rate phenomenon, *AIEE Trans.*, 67, 113–122, 1948.

IEEE, *Standards Collection Distribution, Power and Regulating Transformers*, IEEE Std. C57, Institute of Electrical and Electronics Engineers, Piscataway, NJ, 1994.

www.EngineeringEbooksPdf.com

IEEE, *Guide for Loading Mineral-Oil-Immersed Transformers*, IEEE Std. C57.91–1995, Institute of Electrical and Electronics Engineers, Piscataway, NJ, 1995.

Kelly, J.J., Myers, S.D., and Parrish, R.H., *A Guide to Transformer Maintenance*, S.D. Myers, Akron, OH, 1988a, pp. 200–209.

Kelly, J.J., Myers, S.D., and Parrish, R.H., *A Guide to Transformer Maintenance*, S.D. Myers, Akron, OH, 1988b, pp. 211–258.

Kelly, J.J., Myers, S.D., and Parrish, R.H., *A Guide to Transformer Maintenance*, S.D. Myers, Akron, OH, 1988c, pp. 297–322.

McNutt, W.J., Discussion of the T.V. Oommen, E.M. Petrie, and S.R. Lindgren paper, Bubble generation in transformer windings under overload conditions, *Doble Conference Proceedings, 62PAIC95*, Boston, MA, 1995, pp. 8–5A.1.

Moore, H.R., Water in transformers, presentation to Southern Company, Atlanta, GA, 1997.

Oommen, T.V., Petrie, E.M., and Lindgren, S.R., Bubble generation in transformer windings under overload conditions, *Doble Conference Proceedings, 62PAIC95,* Boston, MA, 1995, pp. 8–5.1.

Pierce, L.W., An investigation of the thermal performance of an oil-filled transformer winding, *IEEE Trans. Power Deliv.*, 7, 1347–1358, 1992.

Pierce, L.W., Current developments for predicting transformer loading capability, *1993 Minnesota Power Systems Conference*, 1993.

Tillman, R.F., Relationships between power factor, voltage regulation, and power transformer loading, *Doble Conference Proceedings, 65PAIC98*, Boston, MA, 1998, pp. 8–9.1.

www.EngineeringEbooksPdf.com

16

Transformer Connections

Stephen Shull
The Empire District Electric Company

Dan D. Perco
Perco Transformer Engineering

16.1 Introduction **16**-1
16.2 Polarity of Single-Phase Transformers **16**-1
16.3 Three-Phase Transformer Connections **16**-2
Double-Wound (Two-Winding) Transformers • Multiwinding (Three or More Windings) Transformers • Single-Phase Transformer Connections for Three-Phase Service
16.4 Common Specialty Connections **16**-11
Autotransformer Common Connection • Interconnected Wye and Grounding Transformers
References **16**-14

16.1 Introduction

Distribution transformers and power transformers have distinctive connections that are tailored to their application. These connections are described in various IEEE and IEC standards (IEEE C57.12.70, IEEE C57.105, and IEC 60076-1). The applications of these transformer connections are dependent on whether the transformation is distribution service, generation step-up, transmission transitions, or special applications. This chapter specifically addresses the most common connections for conditions of service in distribution and transmission systems.

16.2 Polarity of Single-Phase Transformers

The term *polarity* as applied to transformers is used to indicate the phase relationship between the primary and secondary windings of a given transformer or to indicate the instantaneous relative direction of voltage phasors in the windings of different transformers. This facilitates rapid and accurate connections of transformers in service. Transformer manufacturers have agreed to standardize the marking of terminals to indicate their polarity. For a single-phase, two-winding transformer, the high-voltage terminals are labeled H1 and H2, while the low-voltage terminals are labeled X1 and X2. When transformers are to be operated in parallel, like-marked terminals are to be joined together.

Transformers can be either subtractive or additive polarity. When like-numbered terminals such as H1 and X1 are joined together, the voltage between the other open terminals will be the difference of the individual impressed winding voltages for a transformer with subtractive polarity. For additive-polarity transformers, the voltage between the open terminals will be the sum of the individual winding voltages. The standards specify subtractive polarity for all transformers except for single-phase transformers 200 kVA and smaller and having high-voltage windings 8660 V and below. In either case, the polarity of the transformer is identified by the terminal markings as shown in Figure 16.1. Subtractive polarity has correspondingly marked terminals for the primary and secondary windings opposite to each other. For additive polarity, like-numbered winding terminal markings are diagonally disposed.

www.EngineeringEbooksPdf.com

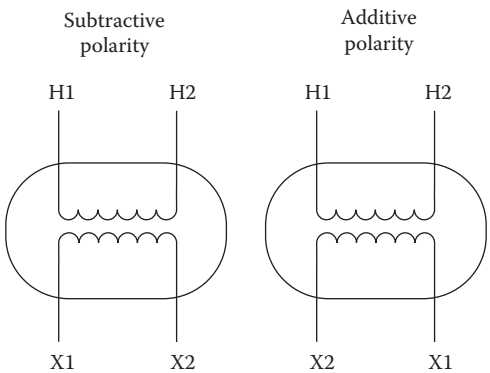

FIGURE 16.1 Single-phase transformer terminal markings.

Transformers with subtractive polarity normally have the primary and secondary windings wound around the core in the same direction. However, the transformer can have subtractive-polarity terminal markings with the primary and secondary coils wound in the opposite directions if the internal winding leads are reversed.

16.3 Three-Phase Transformer Connections

Three-phase connections can be made either by using three single-phase transformers or by using a three-phase transformer. Circuit computations involving three-phase transformer banks under balanced conditions can be made by dealing with only one of the transformers or phases. It is more convenient to use line-to-neutral values since transformer impedances can then be added directly to transmission-line impedances. All impedances must be converted to the same side of the transformer bank by multiplying them by the square of the voltage ratio.

There are two basic types of three-phase transformers, core type and shell type. The magnetic circuit of the shell type is very similar to three single-phase transformers. This type of transformer has a return circuit for each phase of the magnetic flux. Consequently, the zero-sequence impedance is equal to the positive-sequence impedance. The conditions with respect to magnetizing currents and zero-sequence impedances are essentially the same as for single-phase transformers connected in the same way. The center-phase coil is usually wound in a direction opposite to that of the two outer phases in order to decrease the core yoke required between phases. This reversal of polarity is corrected when the leads are terminated.

The magnetic circuit of each phase of a three-limb core-type transformer is mutually connected in that the flux of one phase must return through the other two phases. In this type of transformer, the total instantaneous magnetic flux in each core section due to the fundamental excitation current is zero. However, in the wye–wye-connected transformer, there are third-harmonic voltages in the phases caused by the third-harmonic current. These voltages and the resulting magnetic flux are all induced in the same direction. Since there is no return path for this flux in the core, the flux must return through the relatively low-reluctance path outside the core. The core-type transformer is occasionally manufactured with a five-limb core. In this case, the magnetic circuit and performance characteristics are similar to that of shell-type or single-phase transformers.

Unbalanced system faults and loads can cause significant zero-sequence magnetic flux to occur for some three-phase connections. Unless a magnetic return path for this flux is provided, the flux returns outside the core and can cause eddy-current heating in other transformer conductive components, such as the tank. The existence of zero-sequence flux either within or outside the core depends on both core configuration and winding connections. Three-phase transformer-core assemblies do not usually provide full-capacity return legs for zero-sequence flux. Thus, if sufficient zero-sequence flux occurs, it will be forced to return outside the core.

www.EngineeringEbooksPdf.com

Three-phase transformer connections can be compared with each other with respect to the following:

- Ratio of kVA output to the kVA internal rating of the bank
- Degree of voltage symmetry with unbalanced phase loads
- Voltage and current harmonics
- Transformer ground availability
- System fault-current level
- Switching and system fault and transient voltages

In some cases, there may also be other operating characteristics to determine the most suitable connection for each application.

As well when these transformers are connected, angular displacement can occur. Angular displacement can be described as the phase shift in degrees from a reference voltage to another. The transformers' primary voltage is usually set as the reference. The phase angle displacement of a transformer is the angular measurement from the reference to the secondary voltage defining a positive angle. These voltages can be phase to phase or phase to ground depending on the orientation of the three-phase winding, that is, grounded wye–grounded wye, delta–grounded wye. In North America, the phase shifts commonly found are shown in Figure 16.2. The references for the angular displacement

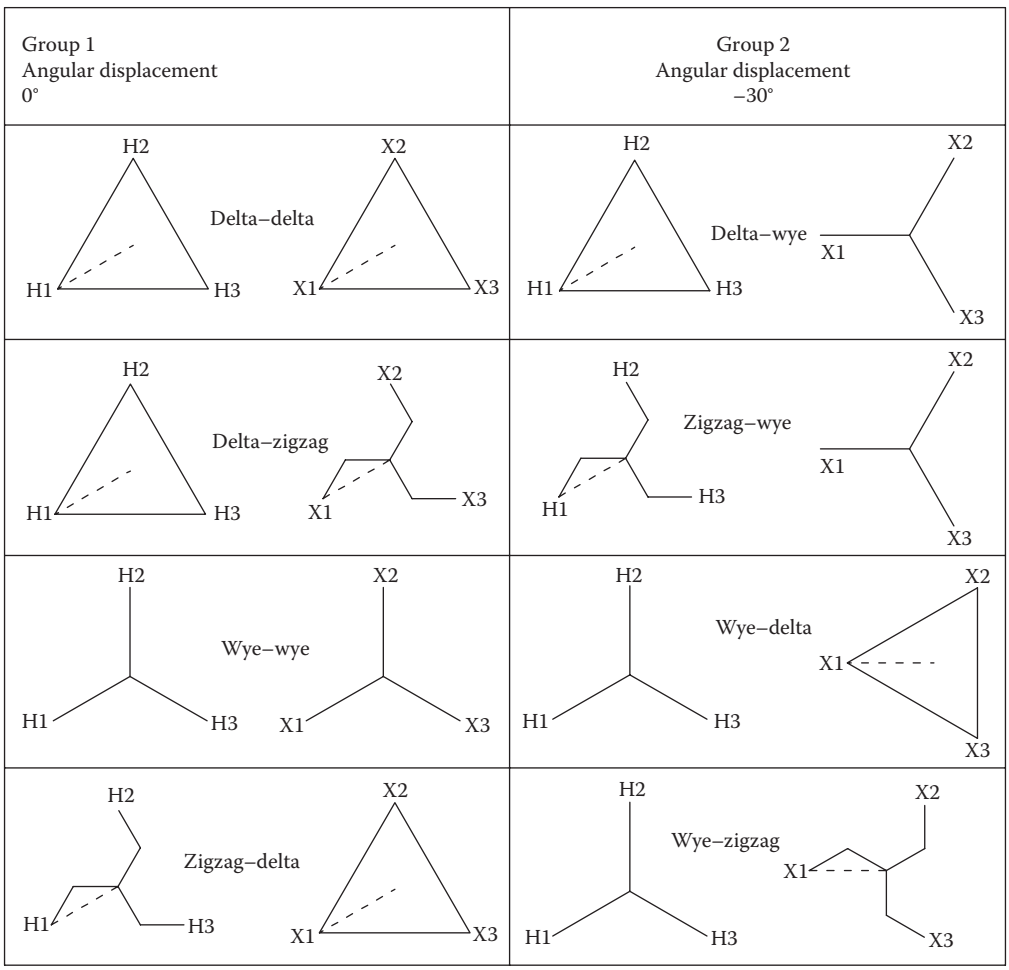

FIGURE 16.2 Common angular displacements for three-phase transformers.

www.EngineeringEbooksPdf.com

are shown as dashed lines. However, in other parts of the world, phase shifts can be quite pronounced due to the interconnection of various regionally developed electrical systems. This has resulted in a standard being developed to address these shifts. The shifts progress in increment of 30° from 0° to 330° (IEC 60076-1 and IEEE C57.12.70). Although this sounds rather simple, its application can be rather daunting.

Phasor grouping of wye- and delta-connected transformers is created by a series of letters and numbers. The letter designation representing the high-voltage winding is in the uppercase letters of Y, D, or Z. The lowercase letters of y, d, or z are for the low- or intermediate-voltage windings. The phasor grouping is listed from high voltage to low voltage. If a neutral point is externally available, the phasor group designation for the voltage set ends with an N or n as appropriate for the winding voltage level. For an autotransformer, the winding pairing will be followed with the word "auto" or an "a" (IEEE C57.12.70).

One of the ways to visualize this system is to think of the face of a 12 h analog clock starting at zero instead of 12:00. As you progress in clockwise direction around the clock face, the angle of difference increases by 30° for every 10 min of time, that is, from 0 to 1 (30°), from 0 to 2 (60°), from 0 to 3 (90°) (Lawhead et al. 2006). To represent a winding configuration and its phasor relationship, the winding designation is listed first, and the phase shift is represented by the end of the clock position, for example, Y2—wye winding connection with a 60° phase shift from the reference point.

Perhaps the best way to look at this configuration is to work through some of the more common configurations. The first presented in Figure 16.3 will be a wye–wye transformer with zero phase shift. To determine the phase relationship of positive sequence voltage and current between primary and secondary, the W_1 phasor will be used as the common reference for each winding. Its phase relationship will be done by measuring the resultant angle between the "A" phasor and the "a" phasor on each winding and thus the primary angle between the reference W_1 phasor minus the secondary angle. This can be represented as follows:

Y0 primary, Y0 secondary, Phase shift of the windings: $+0 - 0 = 0$.

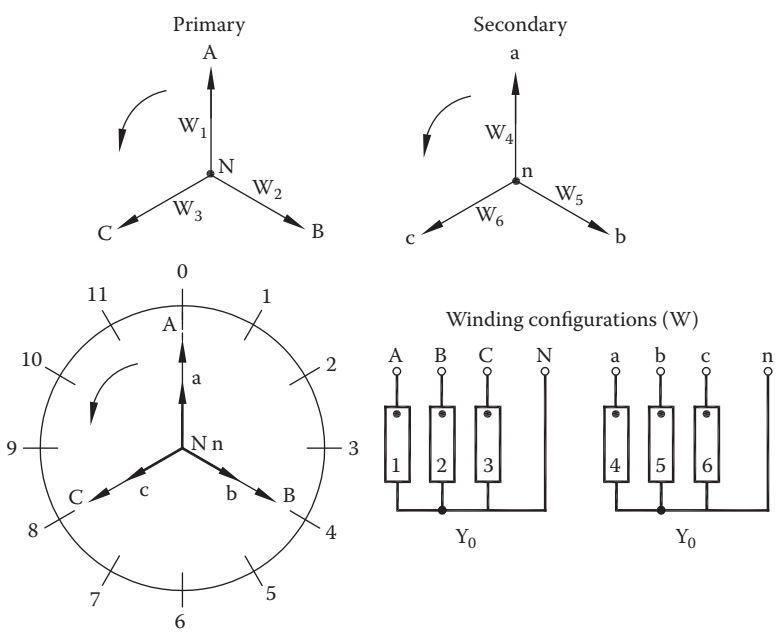

FIGURE 16.3 Angular displacement—explanation for wye–wye connection, Yy0 (Y0–Y0).

www.EngineeringEbooksPdf.com

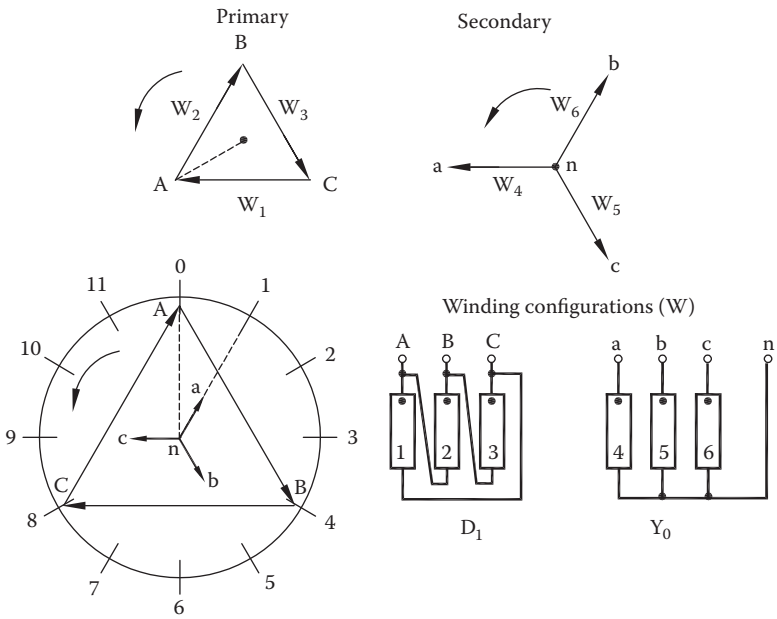

FIGURE 16.4 Angular displacement—explanation for delta–wye connection, Dy1 (D1–Y0).

This results in a final winding representation of Yy0. This would be shown on the nameplate of the transformer. The delta–wye winding configuration is represented in Figure 16.4. The explanation of this configuration is as follows:

$$\text{D1 primary, Y0 secondary,} \quad \text{Phase shift of the windings:} \quad +1 - 0 = 1 \text{ (i.e., } 30°)$$

Some other examples are shown in the following:

- A wye high-voltage winding with neutral bushing; a wye low-voltage winding with neutral bushing; no phase shift between windings. The designation would be *YNyn0*.
- A delta high-voltage winding; a wye low-voltage winding with neutral bushing; with 30° phase shift between windings. The designation would be *Dyn1*.
- A wye high-voltage winding with neutral bushing; a wye low-voltage winding with neutral bushing; no phase shift between windings. A stabilizing tertiary winding connected delta that is not designed for external loading. The designation would be *YNyn0 + d*.
- A wye high-voltage winding with neutral bushing; a wye low-voltage winding with neutral bushing; no phase shift between windings. A stabilizing tertiary winding connected delta and designed for external loading with Tv leading the Hv winding by a 30 degrees phase shift. The designation would be *YNyn0d11*.
- Three-phase autotransformer, with winding connected in wye configuration. The designation would be *YNa or YNauto*.
- Three-phase autotransformer with loaded delta tertiary winding. The designation would be *YNad11 or YNautod11*.
- Three-phase autotransformer with "buried" stabilizing winding. The designation would be *YNa + d or YNauto + d*.
- If a transformer is specified with its winding connection changeable (Y to D, or series–parallel), both connections should be noted as related to the corresponding voltages.
  230(115)/12 kV YN(YN)d5
  115/7.2(4.16) kV YNy0(d5)

www.EngineeringEbooksPdf.com

16.3.1 Double-Wound (Two-Winding) Transformers

The majority of three-phase transformer connections are made by connecting the individual phases either between the power-system lines, thus forming a delta connection, or by connecting one end of each phase together and the other ends to the lines, thus forming a wye (also referred to as star) connection. For these connections, the total rating of the internal windings is equal to the through-load rating. This accounts for the popularity of these connections. For all other double-wound transformer connections, the ratio is less than unity. For example, in the interconnected star or zigzag connection, the transformer is capable of delivering a load equal to only 86.6% of the internal winding rating. Since the cost of a transformer varies approximately with the three-quarter power of the internal kVA, the cost of an interconnected star or zigzag transformer is approximately 5% higher than for a similar double-wound transformer. All of these types of three-phase connections are shown in Figure 16.5.

16.3.1.1 Wye–Wye Connections of Transformers

Joining together the terminals of similar windings with the same polarity derives the neutral of the wye connection. This neutral point is available and can be brought out for any desired purpose, such as grounding or zero-sequence current measurements and protection. For high-voltage transmission systems, the use of the wye-connected transformer is more economical because the voltage across the phase of each winding is a factor of 1.73 less than the voltage between the lines. If the neutral point is grounded, it is not necessary to insulate it for the line voltage. The grounded wye–grounded wye transformer is the connection that the majority of utilities use in distribution systems throughout North America. This is primarily due to the advantages that can be seen when they are used to serve unbalance secondary systems serving large single-phase loads such as residential single-phase apartments.

If the neutral is not grounded, the fault current during a system line to ground fault is insignificant because of the absence of a zero-sequence current path. If the neutral is grounded in the wye–wye transformer and the transformer is made with a three-limb core, the zero-sequence impedance is still high. As a result, the fault currents during a system line-to-ground fault are relatively low. For wye–wye transformers made of three single-phase units or with a shell-type or five-limb core-type, the zero-sequence impedance is approximately equal to the positive-sequence impedance. The fault current during a system ground fault for this case is usually the limiting factor in the design of the transformer. In all types of wye–wye transformer connections, only the transformer positive-sequence impedance limits the fault current during a system three-phase system fault. The connection of the transformer windings in a wye–wye configuration (no grounding) can create instability when large unbalanced single-phase loads are served (GE-2485T).

With the wye connection, the voltages are symmetrical as far as the lines are concerned, but they introduce third-harmonic (or multiples of the third harmonic) voltage and current dissymmetry between lines and neutral. The third-harmonic voltage is a zero-sequence phenomenon and thereby is exhibited in the same direction on all phases. If the transformer and generator neutrals are grounded, third-harmonic currents will flow that can create interference in telephone circuits. If the transformer neutral is not grounded, the third-harmonic voltage at the neutral point will be additive for all three phases, and the neutral voltage will oscillate around the zero point at three times the system frequency. Third-harmonic voltages are also created on the lines, which can subject the power system to dangerous overvoltages due to resonance with the line capacitance. This is particularly true for shell-type three-phase transformers, five-limb core-type transformers, and three-phase banks of single-phase transformers. For any three-phase connection of three-limb core-form transformers, the impedance to third-harmonic flux is relatively high on account of the magnetic coupling between the three phases, resulting in a more stabilized neutral voltage. A delta tertiary winding can be added on wye–wye transformers to provide a path for third-harmonic and zero-sequence currents and to stabilize the neutral voltage. The tertiary in this application will be required to carry all of the zero-sequence fault current during a system line-to-ground fault.

www.EngineeringEbooksPdf.com

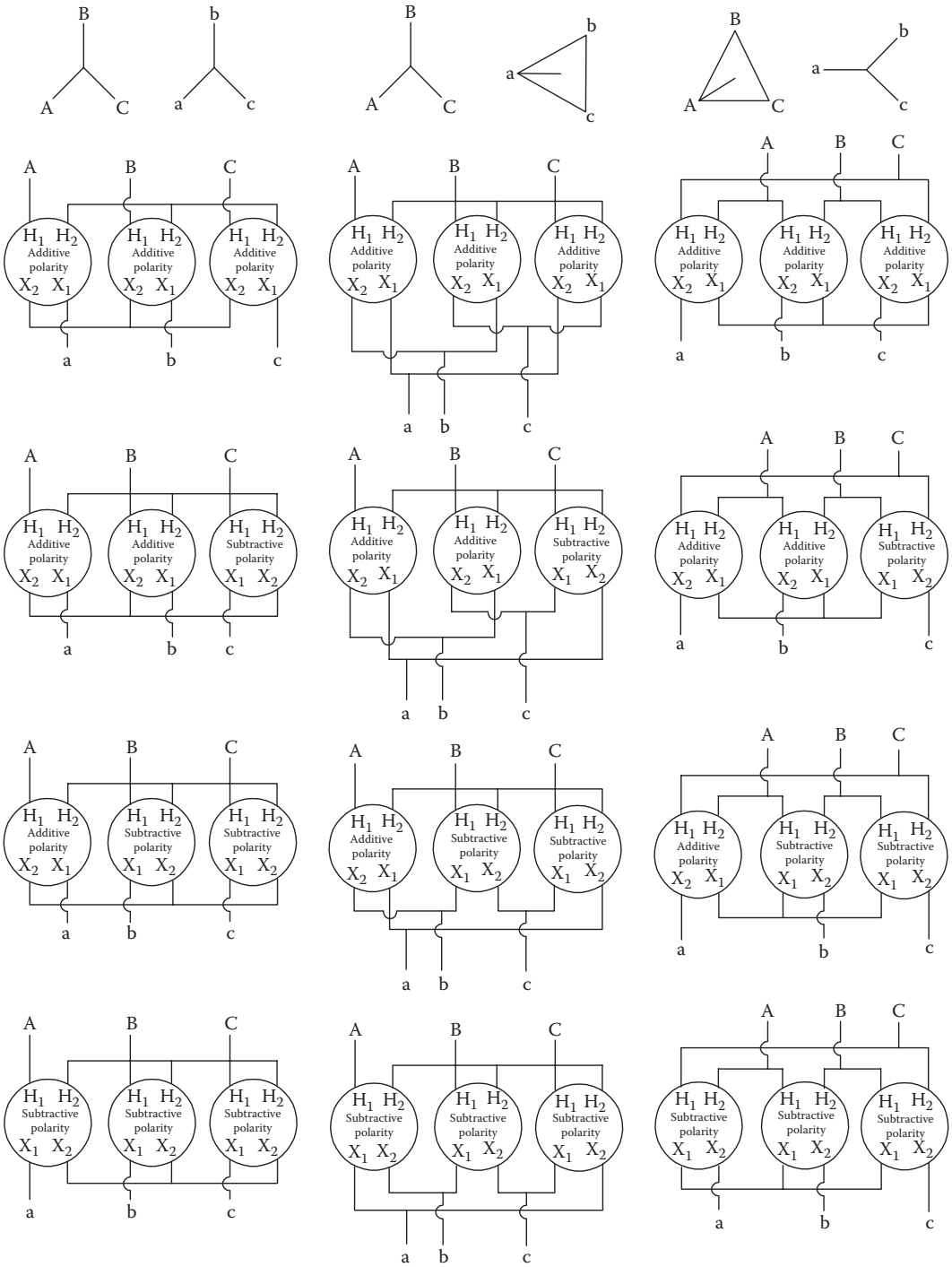

FIGURE 16.5 Common transformer bank connections.

www.EngineeringEbooksPdf.com

The grounded wye–grounded wye transformers are typically built using a five-legged core which provides a flux path for the imbalance of loading, thus preventing tank heating. When a three-legged core is used and single-phase imbalance is present, the tank wall will be drafted into service as a part of the core, thus causing tank wall heating. Since these distribution systems are typically served with a grounded wye step-down transformer, the neutrals are tied solidly to the source, thus reducing the third-harmonic voltages to a negligible amount. The fault current during a service ground fault is usually the limiting factor in the design of this type of transformer.

16.3.1.2 Delta–Delta Connection

The delta–delta connection has an economic advantage over the wye–wye connection for low-voltage, high-current requirements because the winding current is reduced by a factor of 1.73 or 58% of that in the wye–wye connection.

Voltage and current symmetry with respect to the three lines is obtained only in the delta and zigzag connections. Delta-connected transformers do not introduce third harmonics or their multiples into the power lines. The third-harmonic-induced voltage components are 360° apart. They are therefore all in phase and cause a third-harmonic current to flow within the delta winding. This third-harmonic current acts as exciting current and causes a third-harmonic voltage to be induced in each winding that is in opposition to the third-harmonic component of voltage that was originally induced by the sinusoidal exciting current from the lines. As a result, the third harmonic is eliminated from the secondary voltage.

Another advantage of the delta–delta connection, if composed of three single-phase transformers, is that one transformer can be removed and the remaining two phases operated at 86.6% of their rating in the open delta connection.

The principle disadvantage of the delta–delta connection is that the neutral is not available. As a result, the phases cannot be grounded except at the corners. The insulation design is more costly because this type of three-phase transformer connection has higher ground voltages during system fault or transient voltages. Supplying an artificial neutral to the system with a grounding transformer can help to control these voltages. The delta-connection insulation costs increase with increasing voltage. Consequently, this type of connection is commonly limited to a maximum system voltage of 345 kV.

Differences in the voltage ratio of the individual phases cause a circulating current in both the primary and secondary deltas that is limited only by the impedance of the units. Differences in the impedances of the individual phases also cause unequal load division among the phases. When a current is drawn from the terminals of one phase of the secondary, it flows in the windings of all three phases. The current among the phases divides inversely with the impedance of the parallel paths between the terminals.

16.3.1.3 Delta–Wye and Wye–Delta Connections

The delta–wye or wye–delta connections have fewer objectionable features than any other connections. In general, these combine most of the advantages of the wye–wye and delta–delta connections. Complete voltage and current symmetry is maintained by the presence of the delta. The exciting third-harmonic current circulates within the delta winding, and no third-harmonic voltage appears in the phase voltages on the wye side. The high-voltage windings can be connected wye, and the neutral can be brought out for grounding to minimize the cost of the insulation.

Differences in magnetizing current, voltage ratio, or impedance between the single-phase units are adjusted by a small circulating current in the delta. All of these factors result in unbalanced phase voltages on the delta, which causes a current to circulate within the delta.

If the primary windings of a four-wire, wye-connected secondary that is supplying unbalanced loads are connected in delta, the unbalanced loading can be readily accommodated. There will be unbalanced secondary voltages caused by the difference in the regulation in each phase, but this is usually insignificant.

Although the delta–wye connection has most of the advantages of the wye–wye and delta–delta, it still has several disadvantages. A delta–wye bank cannot be operated with only two phases in an emergency.

www.EngineeringEbooksPdf.com

If the delta is on the primary side and should accidentally open, the unexcited leg on the wye side can resonate with the line capacitance.

The grounded wye–delta configuration is used at generation stations for step up to the transmission system. Most generators are connected as grounded wye. The ground is normally connected through a grounding resistor to limit the fault current seen by the generator due to an internal winding fault. This current is normally carefully monitored, and relaying is applied to prevent generator damage. The auxiliaries are normally fed from a transformer connected wye-delta to prevent injection of ground current into the generator circuit. The delta–grounded wye configuration is used by a majority of utilities to provide for a ground source for the distribution system, and thereby the ability to detect a fault and clear it. Although generator and system impedance does enter into fault calculations, the transformer impedance is the majority of the impedance that the fault sees. As well, the delta connection couples all of the windings in the fault, and therefore, all windings see the short-circuit current of the secondary fault. Even though the voltages of the wye are affected by the fault, the delta voltages remain stable if the resistance of the transformer winding is negligible compared to the reactance (GE-2485T). This is normally the case. This advantage can serve to help isolate the transmission system from voltage fluctuations caused by faults on the distribution system. However, this transformer arrangement represents a phase shift of 30° for the voltages and currents. This is covered in more detail in Section 16.3. This must be taken into account when paralleling units or developing differential protection schemes. The third-harmonic voltages are not an issue in these configurations.

16.3.2 Multiwinding (Three or More Windings) Transformers

Transformers having more than two windings coupled to the same core are frequently used in power and distribution systems to interconnect three or more circuits with different voltages or to electrically isolate two or more secondary circuits. For these purposes, a multiwinding transformer is less costly and more efficient than an equivalent functionality as could be provided by a number of two-winding transformers. The arrangement of windings can be varied to change the leakage reactance between winding pairs. In this way, the voltage regulation and the short-circuit requirements are optimized. The application of multiwinding transformers permits the following:

- Interconnection of several power systems operating at different voltages
- Use of a delta-connected stabilizing winding, which can also be used to supply external loads
- Control of voltage regulation and reactive power
- Electrical isolation of secondary circuits
- Duplication of supply to a critical load
- Connection for harmonic-filtering equipment
- A source for auxiliary power at a substation

Some of the problems with the use of multiwinding transformers are associated with the effect leakage impedance has on voltage regulation, short-circuit currents, and the division of load among the different circuits. All the windings are magnetically coupled to the leakage flux and are affected by the loading of the other windings. It is therefore essential to understand the leakage impedance behavior of this type of transformer to be able to calculate the voltage regulation of each winding and load sharing among the windings. For three-winding transformers, the leakage reactance between each pair of windings must be converted into a star-equivalent circuit. The impedance of each branch of the star circuit is calculated as follows:

$$Z_a = 0.5(Z_{ab} + Z_{ca} - Z_{bc}) \tag{16.1}$$

$$Z_b = 0.5(Z_{bc} + Z_{ab} - Z_{ca}) \tag{16.2}$$

www.EngineeringEbooksPdf.com

and

$$Z_c = 0.5(Z_{ca} + Z_{bc} - Z_{ab}) \tag{16.3}$$

where

Z_a, Z_b, and Z_c are the star-equivalent impedances in each branch

Z_{ab}, Z_{bc}, and Z_{ca} are the impedances as seen from the terminals between each pair of windings with the remaining winding left open circuit

The equivalent star-circuit reactances and resistances are determined in the same manner.

The four-winding transformer coupled to the same core is not commonly used because of the interdependence of the voltage regulation of each winding to the loading on the other windings. The equivalent circuit for a four-winding transformer is much more complicated, involving a complex circuit of six different impedances.

After the loading of each winding is determined, the voltage regulation and load sharing can be calculated for each impedance branch and between terminals of different windings. The currents in each winding during a system fault can also be calculated in a similar fashion.

16.3.3 Single-Phase Transformer Connections for Three-Phase Service

In Figure 16.5, different polarity units are shown combined into transformer banks to demonstrate the most common connections (GE-2485T, ABB, and GET-2J). However, there are two connections that are used by various utilities to provide three-phase service to distribution customers when only two phases are available. The first would be an open grounded wye—open 120/240 V four-wire delta. This service type has the advantage of supplying small three-phase loads without the expense of a full three-phase overhead line. It is generally used when single phase is present, and with a minor upgrade of the line, two phases can be provided. Figure 16.6 illustrates the connection and phasor representation. The three-phase motor loading of this type of transformer arrangement must be small because voltage regulation can be very erratic and objectionable when a large reactance is placed in the three-phase circuit. The voltage supplied will also be affected when heavy loading of the delta is done because the delta will have a tendency

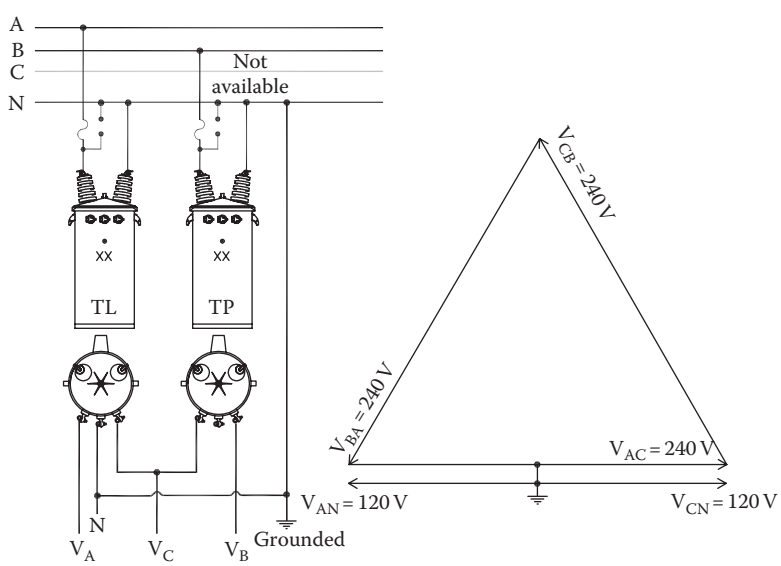

FIGURE 16.6 Four-wire delta from a two-phase system.

www.EngineeringEbooksPdf.com

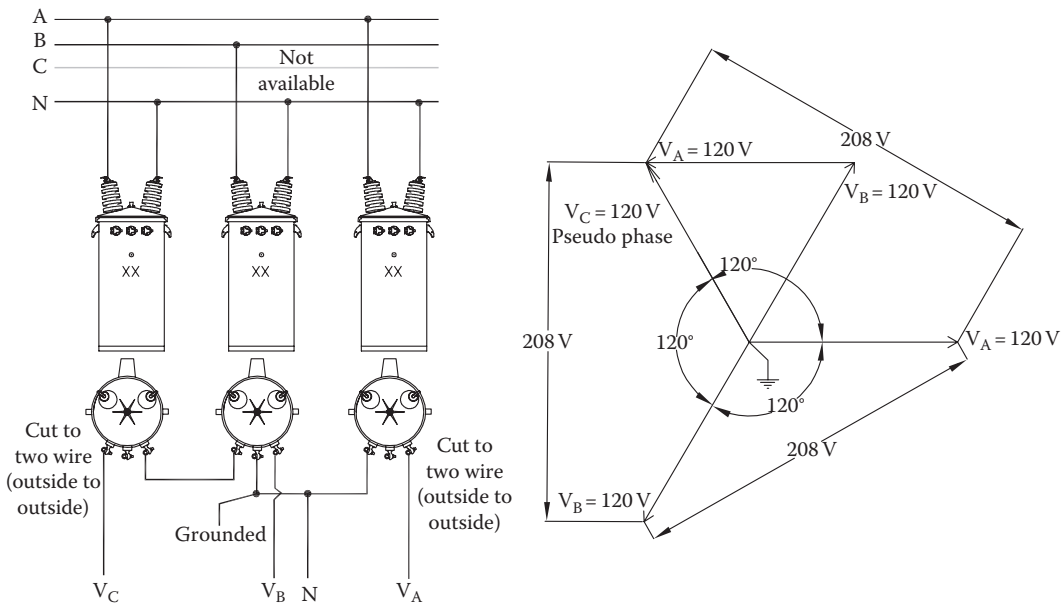

FIGURE 16.7 Four-wire wye from a two-phase system.

to collapse on the unsupported voltage leg. Another advantage of this connection is the use of dissimilar transformers (GE-2485T). The loading of the transformers is defined roughly by the following formulas:

$$KVA_{TL} = KVA_{1phase} + (0.58) \times KVA_{3phase} \tag{16.4}$$

$$KVA_{TP} = (0.58) \times KVA_{3phase} \tag{16.5}$$

The second one is similar to the previous, for it can be used to provide three-phase 120/208 V ground wye service from an open ground wye system. Some of the same advantages and disadvantages can be realized with this banking arrangement, but it is more complex in its configuration and not intuitive to the lineman making the connections. Figure 16.7 illustrates the connection and phasor representation. Please note that the center transformer of this configuration must be double the kVA rating of its companions to provide proper capacity.

16.4 Common Specialty Connections

The development of large, high-voltage power grids has increased the reliability and efficiency of electric power systems. However, the difference of voltages, impedance, loads, and phase angles between paralleled power lines causes unbalanced line loading. The phase-shifting transformer is used to provide a phase shift between two systems to control the power flow. A phase-shifting transformer is a transformer that advances or retards the voltage phase-angle relationship of one circuit with respect to another circuit. In some cases, phase-shifting transformers can also control the reactive power flow by varying the voltages between the two circuits. This application is discussed in Chapter 4.

The three-phase connections used to supply rectifying or inverter circuits are discussed in Chapter 5.

Transformers having terminals marked in the manner shown in Section 16.2, can be operated in parallel by connecting similarly marked terminals provided that their ratios, voltages, angular displacement, resistances, reactances, and ground connections are such as to permit parallel operation. Paralleling of this type of transformer and others is discussed in Chapter 18.

www.EngineeringEbooksPdf.com

16.4.1 Autotransformer Common Connection

It makes no difference whether the secondary voltage is obtained from another coil or from the primary turns. The same transformation ratio is obtained in either case. When a transformer uses a common winding to provide both the primary and secondary connection, it is classified as an autotransformer. This is illustrated in Figure 16.8. These units have special applications in power transmission networks and serve a couple of purposes and advantages to that of a two-winding transformer. They provide voltage adjustment, and their reduced weight and dimensional footprint lead to their use in high-voltage transmission substations. This last quality leads to cost savings both through their construction and power efficiency. The majority of these units are core form by design (common core for the windings) and grounded wye–grounded wye connected. As well the efficiency comes from their need for less excitation current which presents itself in lower core and winding losses. Also the percentage kVA transformation is the same as the percent voltage transformation because the power is transferred directly from the primary to the secondary with only a small amount being transferred electromagnetically (Patel, 2006). Therefore, the nameplate power (P_{np}) is represented by two factors: power from the electrical connected winding (P_{ec}) and power from electromagnetic coupling (P_{mc}).

This can be mathematically represented by the following (Patel, 2006):

$$P_{np} = V_1 \times I_1 \tag{16.6}$$

$$P_{mc} = V_s \times I_1 \Rightarrow P_{mc} = (V_1 - V_{Aa}) \times I_1 \tag{16.7}$$

$$\alpha = \left(\frac{P_{mc}}{P_{np}}\right) = 1 - \left(\frac{V_1}{V_{Aa}}\right) \tag{16.8}$$

So the transferred electrical power (P_{ep}) is dependent on the co-ratio or autofraction:

$$P_{ep} = P_{np} - P_{mc} \Rightarrow P_{ep} = P_{np} \times (1 - \alpha) \tag{16.9}$$

It should be noted that as the ratio of V_1 to V_S gets closer to 1, the smaller the autofraction (α) becomes. Since the dimensions of the autotransformer are defined by P_{ep}, the smaller the autofraction, the smaller

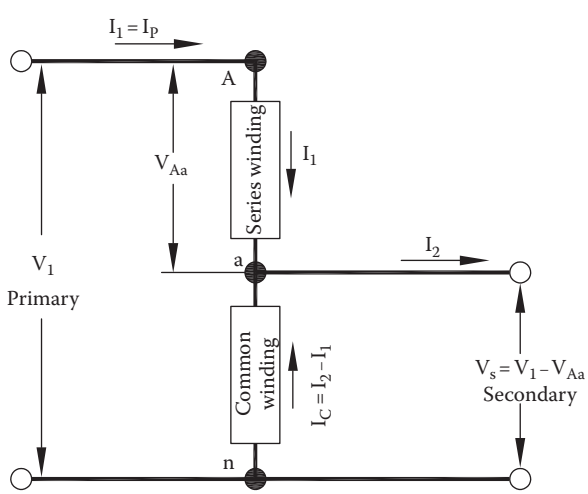

FIGURE 16.8 The autotransformer.

www.EngineeringEbooksPdf.com

the unit. All of this leads to a unit which is dimensionally much smaller compared to a two-winding transformer of the same ratio and power rating. However, there are issues that must be addressed when using an autotransformer. Because of the lower impedance, these units can see high fault currents. This causes significant stress to the core–coil assemblies. Thus, special studies must be done to eliminate ampere turn imbalance between windings. Another consideration is the overvoltage that can occur with a phase-to-ground fault. To help with this issue, the transformer should be protected both internally and externally. Externally, surge (lighting) arresters should be coordinated for the application. The internal protection is the result of winding design and requires careful study of the electrically active parts of the transformer.

Most autotransformers are ordered with delta-connected tertiary windings. They are provided for the following reasons (Patel, 2006):

1. To provide auxiliary load, that is, fans, pumps, control power
2. To suppress the third-harmonic currents and voltages in lines
3. To stabilize the neutral point of the fundamental frequency voltages
4. To reduce the zero-sequence impedance of the transformer to zero-sequence currents flowing during fault conditions
5. For power factor correction by the connection of capacitors or synchronous condensers

If a tertiary is used, it must be sized correctly so that it doesn't cause failure of the autotransformer. The size is generally about one-third of transferred electrical power (P_{ep}).

16.4.2 Interconnected Wye and Grounding Transformers

The interconnected-wye–wye connections have the advantages of the star–delta connections with the additional advantage of the neutral. The interconnected-wye or zigzag connection allows unbalanced-phase load currents without creating severe neutral voltages. This connection also provides a path for third-harmonic currents created by the nonlinearity of the magnetic core material. As a result, interconnected-wye neutral voltages are essentially eliminated. However, the zero-sequence impedance of interconnected-wye windings is often so low that high third-harmonic and zero-sequence currents will result when the neutral is directly grounded. These currents can be limited to an acceptable level by connecting a reactor between the neutral and ground. The interconnected-wye–wye connection has the disadvantage that it requires 8% additional internal kVA capacity. This and the additional complexity of the leads make this type of transformer connection more costly than the other common types discussed earlier.

The stable neutral inherent in the interconnected-wye or zigzag connection has made its use possible as a grounding transformer for systems that would be isolated otherwise. This is shown in Figure 16.9.

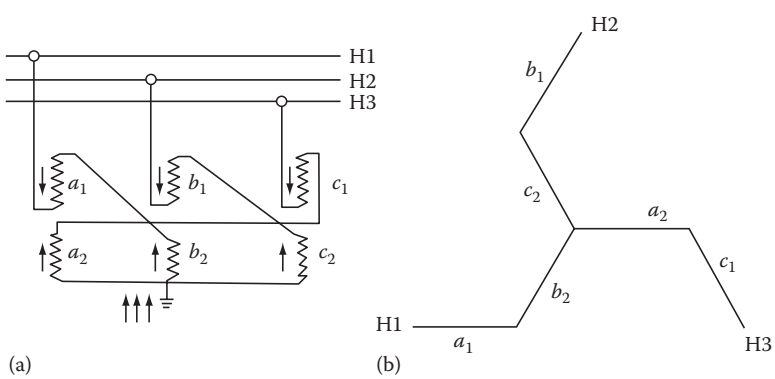

FIGURE 16.9 Interconnected star-grounding transformer: (a) current distribution in the coils for a line-to-ground fault and (b) normal operating voltages in the coils.

www.EngineeringEbooksPdf.com

The connections to the second set of windings can be reversed to produce the winding angular displacements shown in Figure 16.2.

For a line-to-neutral load or a line-to-ground fault on the system, the current is limited by the leakage reactance between the two coils on each phase of the grounding transformer.

References

ABB Distribution Transformer Guide, Distribution Transformer Department, Athens, GA and Jefferson City, MO, June 1979, Revised October, 1991, 90pp.

GE-2485T, *General Electric Distribution Transformer Manual*, GE Component Products Operation, 1996, 110pp.

GET-2J, *GE Transformer Connections*, Principals L. F. Blume and A. Boyajian, edited by GE Power Transformer Department, Pittsfield, MA, 1970, 134pp.

IEC 60076-1, Power Transformers.

IEEE C57.105, *IEEE Guide for Application of Transformer Connections in Three-Phase Distribution Systems*, Institute of Electrical and Electronics Engineers, New York, Approved June 2, 1977, Reaffirmed June 11, 1987, Reaffirmed June 18, 1992, Reaffirmed March 27, 2008, 33pp.

IEEE C57.12.70, *IEEE Standard Terminal Markings and Connections for Distribution and Power Transformers*, Institute of Electrical and Electronics Engineers, New York, Approved December 7, 2011, 43pp.

Lawhead, L., Hamilton, R., and Horak, J., Three phase transformer winding configurations and differential relay compensation Basler Electric Company, Presented before the *60th Annual Georgia Tech Protective Relay Conference*, Atlanta, GA, May 2–5, 2006, 40 pp.

Patel, S.Y., Special designs auto-transformers, S.Y. Patel, Smit transformers, presented before the *Doble "The Life of a Transformer" Seminar & Industry Expo*, Clearwater Beach Hilton Hotel, Clearwater Beach, FL, February 19–25, 2006.

www.EngineeringEbooksPdf.com

17

Transformer Testing

17.1 Introduction **17**-1
Standards • Classification of Tests • Sequence of Tests • Scope of This Chapter
17.2 Voltage Ratio and Proper Connections **17**-4
The Purpose of Ratio, Polarity, and Phase-Relation Tests • Ratio Test • Polarity Test • Phase Relationship Test
17.3 Insulation Condition **17**-5
The Purpose of Insulation Condition Tests • Insulation Power Factor • Insulation Resistance
17.4 Control Devices and Control Wiring **17**-7
17.5 Dielectric Withstand **17**-7
Transient Dielectric Tests • Low-Frequency Dielectric Tests
17.6 Performance Characteristics **17**-17
No-Load Loss and Excitation-Current Measurements • Load Loss and Impedance Measurements • Winding Resistance Measurements • Heat Run Tests
17.7 Other Tests **17**-26
Short-Circuit-Withstand Tests • Special Tests
References **17**-28

Shirish P. Mehta
Waukesha Electric Systems

William R. Henning
Waukesha Electric Systems

17.1 Introduction

Reliable delivery of electric power is, in great part, dependent on the reliable operation of power transformers in the electric power system. Power transformer reliability is enhanced considerably by a well-written test plan, which should include specifications for transformer tests. Developing a test plan with effective test specifications is a joint effort between manufacturers and users of power transformers. The written test plan and specifications should consider the anticipated operating environment of the transformer, including factors such as atmospheric conditions, types of grounding, and exposure to lightning and switching transients. In addition to nominal rating information, special ratings for impedance, sound level, or other requirements should be considered in the test plan and included in the specifications. Selection of appropriate tests and the specification of correct test levels, which ensure transformer reliability in service, are important parts of this joint effort.

Transformers can be subjected to a wide variety of tests for a number of reasons, including:

- Compliance with user specifications
- Assessment of quality and reliability
- Verification of design calculations
- Compliance with applicable industry standards

www.EngineeringEbooksPdf.com

17.1.1 Standards

ANSI standards for power transformers are given in the C57 series of standards. Requirements that apply generally to all power and distribution transformers are given in the following two standards. These standards are particularly relevant and useful for those needing information on transformer testing.

IEEE C57.12.00, *IEEE Standard General Requirements for Liquid-Immersed Distribution*, Power, and Regulating Transformers [1].

IEEE C57.12.90, *IEEE Standard Test Code for Liquid-Immersed Distribution*, Power, and Regulating Transformers; and Guide for Short-Circuit Testing of Distribution and Power Transformers (ANSI) [2].

These two ANSI and IEEE standards, and others, will be cited frequently in this article. There are many other standards in the ANSI C57 series for transformers, covering the requirements for many specific products, product ranges, and special applications. They also include guides, tutorials, and recommended practices. These documents will be of interest to readers wanting to find out detailed, authoritative information on testing power and distribution transformers.

The standards cited above are very important documents because they facilitate precise communication and understanding between manufacturers and users. They identify critical features, provide minimum requirements for safe and reliable operation, and serve as valuable references of technical information.

17.1.2 Classification of Tests

According to ANSI and IEEE standards [1], all tests on power transformers fall into one of three categories: (1) routine tests, (2) design tests, and (3) other tests. The manufacturer may perform additional testing to ensure the quality of the transformer at various stages of the production cycle. For this discussion, tests on power transformers are categorized as shown in Table 17.1.

Some of these tests are performed before the transformer core and coil assembly is placed in the tank, while other tests are performed after the transformer is completely assembled and ready for "final testing." However, what are sometimes called "final tests" are not really final. Additional tests are performed just before transformer shipment, and still others are carried out at the customer site during installation and commissioning. All of these tests, the test levels, and the accept/reject criteria represent an important aspect of the joint test plan development effort made between the manufacturer and the purchaser of the transformer.

17.1.3 Sequence of Tests

The sequence in which the various tests are performed is also specified. An example of test sequence is as follows:

Tests before tanking

- Preliminary ratio, polarity, and connection of the transformer windings
- Core insulation tests
- Ratio and polarity tests of bushing-current transformers

Tests after tanking (final tests)

- Final ratio, polarity, and phase rotation
- Insulation capacitance and dissipation factor
- Insulation resistance
- Control-wiring tests
- Lightning-voltage impulse tests
- Applied-voltage tests

www.EngineeringEbooksPdf.com

TABLE 17.1 Transformer Tests by Category

Dielectric Tests				
Transients	Low (Power) Frequency	Tests of Performance Characteristics	Thermal Tests	Other Tests
Lightning impulse	Applied voltage	No-load loss	Winding resistance	Insulation capacitance and dissipation factor[a]
Full wave				
Chopped wave				
Steep wave				
Switching impulse	Single-phase induced	Excitation current, %	Heat-run test	Sound-level tests
			Oil rise	
			Winding rise	
			Hottest-spot rise	
	Three-phase induced	Load loss	Overload heat run	10-kV excitation current
	Partial discharge	Impedance, %	Gas in oil	Megger
		Zero-sequence impedance	Thermal scan	Core ground
		Ratio test		Electrical center[a]
		Short-circuit test		Recurrent surge
				Dew point
				Core loss before impulse
				Control-circuit test[a]
				Test on series transformer[a]
				LTC tests[a]
				Preliminary ratio tests[a]
				Test on bushing CT[a]
				Oil preservation system[a]

[a] Quality control tests.

- Induced-voltage tests and partial-discharge measurements
- No-load-loss and excitation-current measurements
- Winding-resistance measurements
- Load-loss and impedance-voltage measurements
- Temperature-rise tests (heat runs)
- Tests on gauges, accessories, LTCs, etc.
- Sound-level tests
- Other tests as required

Tests before shipment

- Dew point of gas
- Core-ground megger test
- Excitation-frequency-response test

Commissioning tests

- Ratio, polarity, and phase rotation
- Capacitance, insulation dissipation factor, and megger tests
- LTC control settings check
- Test on transformer oil
- Excitation-frequency-response test
- Space above the oil in the transformer tank.

www.EngineeringEbooksPdf.com

17.1.4 Scope of This Chapter

This chapter will cover testing to verify or measure the following:

- Voltage ratio and proper connections
- Insulation condition
- Control devices and control wiring
- Dielectric withstand
- Performance characteristics
- Other tests

17.2 Voltage Ratio and Proper Connections

17.2.1 The Purpose of Ratio, Polarity, and Phase-Relation Tests

Tests for checking the winding ratios, and for checking the polarity and phase relationships of winding connections, are carried out on all transformers during factory tests. The purpose of these tests is to ensure that all windings have the correct number of turns according to the design, that they are assembled in the correct physical orientation, and that they are connected properly to provide the desired phase relationship for the case of polyphase transformers. If a transformer is equipped with either a de-energized tap changer (DETC) or a load tap changer (LTC), or both, then ratio tests are also carried out at the various positions of the tap changer(s). The objective of ratio tests at different tap positions is to ensure that all winding taps are made at the correct turns and that the tap connections are properly made to the tap-changing devices.

The standards [2] define three separate tests:

1. Ratio test
2. Polarity test
3. Phase-relation test

However, test sets are available that, once all the connections are made, determine ratio and polarity simultaneously and facilitate testing of three-phase transformers to determine phase relationship by switch selection of the required leads. In this sense, the three tests can be combined.

17.2.2 Ratio Test

ANSI and IEEE standards [1] require that the measured voltage ratio between any two windings be within ±0.5% of the value indicated on the nameplate. To verify this requirement, ratio tests are performed in which the actual voltage ratio is determined through measurements. Ratio tests can be made by energizing the transformer with a low ac test voltage and measuring the voltage induced in other windings at various tap settings, etc. In each case, the voltage ratio is calculated and compared with the voltage ratio indicated on the transformer nameplate. More commonly, transformer-turns-ratio test sets (TTRs) are used for making the tests. In this method, the transformer to be tested is energized with a low ac voltage at power frequency in parallel with the high-turn winding of a standard reference transformer in the test set. The induced voltage in the low-voltage (LV) winding of the transformer under test is compared against the induced voltage of the variable low-turn reference winding, in both magnitude and phase, to verify voltage ratio and polarity.

17.2.3 Polarity Test

Polarity is usually checked at the same time as turns ratio, using the test set. At balance, a transformerturns-ratio test set displays the voltage ratio between two windings and also indicates winding polarity.

www.EngineeringEbooksPdf.com

There are three other ways to check polarity:

1. Inductive kick
2. Alternating voltage
3. Comparison with transformer of known polarity and same ratio

Information on these methods can be found in the IEEE test code [2].

17.2.4 Phase Relationship Test

The transformer test sets used to determine voltage ratio and polarity are designed for single-phase operation, but supplemental switching arrangements are employed to facilitate testing of three-phase transformers. Based on the phasor diagram of the three-phase transformer, appropriate high and low voltages (HV and LV) are selected by switches for determining the phase relationships.

The IEEE test code [2] discusses additional methods that can be used to determine or verify phase relationship.

17.3 Insulation Condition

17.3.1 The Purpose of Insulation Condition Tests

Full-scale dielectric testing of the transformer insulation system is discussed in a later section of this chapter. To be discussed here are insulation tests, performed at voltages of about 10 kV, to verify the condition of the insulation system. Initial measurements at the factory can be recorded and compared with later measurements in the field to assess changes in the condition of the transformer insulation.

The quality of the transformer insulation and the efficacy of the insulation processing for moisture removal are evaluated through the results of insulation power-factor tests and insulation resistance tests.

17.3.2 Insulation Power Factor

Insulation power-factor tests are performed in one of two ways. In the first general method, a bridge circuit is used to measure the capacitance and dissipation factor (tan δ) of the insulation system. In the second general method, a specially designed test set measures voltage, current, and power when tests are made at about 10 kV. From these measurements, the insulation power factor (cos ϕ) is determined. For a well-processed insulation system, the dielectric loss will be low, with a correspondingly small loss angle. When the loss angle is small, then cos ϕ is nearly equal to tan δ, and the "insulation power factor" and "tan δ" methods are therefore equivalent.

17.3.2.1 Insulation Capacitance and Dissipation Factor (tan δ) Test

The measurement of insulation capacitance and dissipation factor (tan δ) is carried out using a capacitance bridge. A transformer ratio arm bridge or a Schearing bridge can be used for this purpose. In a two-winding transformer, there are three measurements of capacitance: (1) HV to ground, (2) LV to ground, and (3) HV to LV. These values of capacitance and their respective values of insulation dissipation factor (tan δ) are to be measured.

For performing these tests, the following connections are made. All HV line terminals are connected together and labeled (H); all LV line terminals are connected together and labeled (L); and a connection is made to a ground terminal, usually a connection to the transformer tank, which is labeled (G). Leads from the measuring instrument or bridge are connected to one or both terminals and ground. Either grounded specimen measurements or guarded measurements are possible, so that all capacitance

www.EngineeringEbooksPdf.com

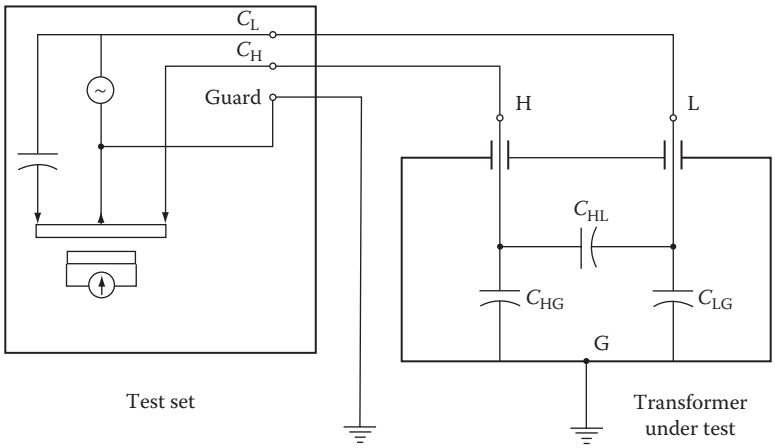

FIGURE 17.1 Measurement of capacitance and dissipation factor—high to low.

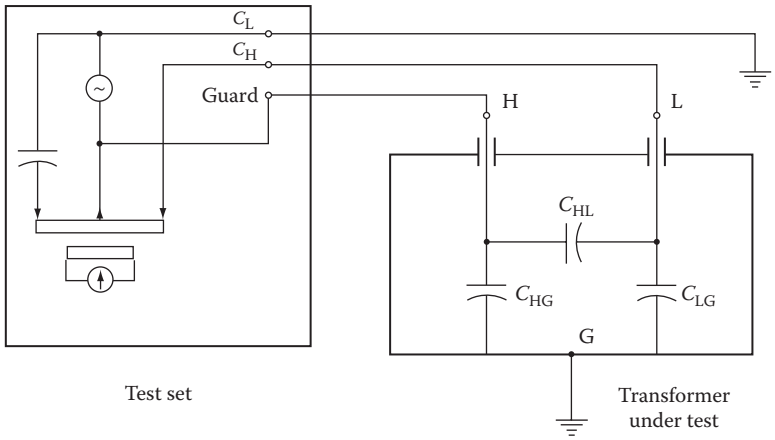

FIGURE 17.2 Measurement of capacitance and dissipation factor—low to ground.

values and dissipation-factor values can be determined. Figure 17.1 shows the measurement of capacitance and dissipation factor of the HV-to-LV capacitance, using guarded measurements. Figure 17.2 is for the low-to-ground capacitance. These measurements are usually made at voltages of 10 kV or less, at or near power frequency. In substations and factory test floors, interference control circuits may be required to achieve the desired sensitivity at balance.

17.3.2.2 Volt-Ampere-Watt Test

Test sets, specifically designed for this purpose, determine the required parameters by measurements of voltage, current, and power when tests are made with about 10-kV excitation. Insulation power factor is computed from the measured quantities, based on the definition of power factor, W/VA.

17.3.2.3 Interpretation of Results

Insulation power factor values of less than 0.5% are considered an indication of well-processed, dried-out transformer insulation. Although there is general recognition and agreement that power-factor and dissipation-factor values are dependent on temperature, the exact relationship is not uniformly agreed upon. When insulation power factor is measured, temperature should also be recorded.

www.EngineeringEbooksPdf.com

17.3.3 Insulation Resistance

Insulation resistance of a two-winding transformer insulation system—HV to ground, LV to ground, and HV to LV—is determined with a "megger" type of instrument, so named because the expected value for resistance is in the millions of ohms. Historically, insulation-resistance measurements are also made to assess the amount of moisture in transformer insulation. However, the measurement of insulation dissipation factor has shown to be a better indicator of the overall condition of insulation in a power transformer.

17.4 Control Devices and Control Wiring

Modern power transformers often incorporate equipment-condition-monitoring devices and substation-automation-related devices as part of their control systems. Testing of the devices and the functional verification of the control system is a very critical aspect of the controls test plan. The controls test should include performance verification of control devices with various equipment protection, monitoring, and supervisory functions. Such devices may include: liquid-temperature gauges, winding-temperature simulator gauges, liquid-level gauges, pressure-vacuum gauges, conservator Buchholz relays, sudden-pressure relays, pressure-relief devices, etc. Many power transformers are equipped with-load tap changers, and tests to verify operation of the LTC at rated current during factory tests are now included in the latest ANSI standards. LTC control settings for voltage level, bandwidth, time delay, first-customer protection, backup protection, etc., should also be verified during factory tests and at commissioning.

Bushing current transformer leads are usually routed to the control cabinet for connection by the customer. That these leads are connected to the proper terminals is usually checked during the load-loss test on power transformers by monitoring the secondary current in various tap positions of the bushing CTs.

Applied voltage tests, commonly called "hipot" tests, are performed to check the dielectric integrity of the control wiring. A 2.5-kV ac test is recommended for current transformer leads, and a 1.5-kV ac test is required for other control circuit wiring.

17.5 Dielectric Withstand

In actual operation on a power system, a transformer is subjected to both normal and abnormal dielectric stresses. For example, a power transformer is required to operate continuously at 105% of rated voltage when delivering full-load current and at 110% of rated voltage under no-load for an indefinite duration [1]. These are examples of conditions defined as *normal operating conditions* [1]. The voltage stresses associated with normal conditions as defined above, although higher than stresses at rated values, are nonetheless considered normal stresses.

A transformer may be subjected to *abnormal* dielectric stresses, arising out of various power system events or conditions. Sustained power-frequency overvoltage can result from Ferranti rise, load rejection, and ferroresonance. These effects can produce abnormal turn-to-turn and phase-to-phase stresses. On the other hand, line-to-ground faults can result in unbalance and very high terminal-to-ground voltages, depending upon system grounding. Abnormal transient overvoltages of short duration arise out of lightning-related phenomena, and longer duration transient overvoltages can result from line-switching operations.

Even though these dielectric stresses are described as *abnormal*, the events causing them are expected to occur, and the transformer insulation system must be designed to withstand them. To verify the transformer capability to withstand these kinds of abnormal but expected transient and low-frequency dielectric stresses, transient and low-frequency dielectric tests are routinely performed on all transformers. The general IEEE transformer standard [1] identifies the specific tests required. It also defines test levels for each test. The IEEE test code [2] describes exactly how the tests are to be made; it defines pass–fail criteria; and it provides valid methods of corrections to the results.

www.EngineeringEbooksPdf.com

17.5.1 Transient Dielectric Tests

17.5.1.1 Purpose of Transient Dielectric Tests

Transient dielectric tests consist of lightning-impulse tests and switching-impulse tests. They demonstrate the strength of the transformer insulation system to withstand transient voltages impinged upon the transformer terminals during surge-arrester discharges, line-shielding flashovers, and line-switching operations.

Power transformers are designed to have certain transient dielectric strength characteristics based on basic impulse insulation levels (BIL). The general IEEE transformer standard [1] provides a table listing various system voltages, BIL, and test levels for selected insulation classes. The transient dielectric tests demonstrate that the power transformer insulation system has the necessary dielectric strength to withstand the voltages indicated in the tables.

17.5.1.2 Lightning-Impulse Test

Impulse tests are performed on all power transformers. In addition to verification of dielectric strength of the insulation system, impulse tests are excellent indicators of the quality of insulation, workmanship, and processing of the paper and insulating-oil system. The sequence of tests, test connections, and applicable standards is described below.

Lightning-impulse voltage tests simulate traveling waves due to lightning strikes and line flashovers. The full-wave lightning-impulse voltage waveshape is one where the voltage reaches crest magnitude in 1.2 μs, then decays to 50% of crest magnitude in 50 μs. This is shown in Figure 17.3. Such a wave is said to have a *waveshape* of 1.2 × 50.0 μs. The term *waveshape* will be used in this article to refer to the test wave in a general way. The term *waveform* will be used when referring to detailed features of the test voltage or current records, such as oscillations, "mismatches," and chops. The difference in meaning of these two terms can be found in the IEEE dictionary [3].

In addition to the standard-impulse full wave, a second type of lightning-impulse wave, known as the chopped wave, or sometimes called the tail-chopped wave, is used in transformer work. The chopped wave employs the same waveshape as a full-wave lightning impulse, except that its crest value is 10% greater than that of the full wave, and the wave is chopped at about 3 μs. The chop in the voltage wave is accomplished by the flashover of a rod gap, or by using some other chopping device, connected in parallel with the transformer terminal being tested. This wave is shown in Figure 17.4. The chopped-wave test simulates the sudden external flashover (in air) of the line insulation to ground. When the voltage applied to a transformer terminal suddenly collapses, the step change in voltage causes internal oscillations that can produce high dielectric stresses in specific regions of the transformer winding. The chopped-wave test demonstrates ability to withstand the sudden collapse of instantaneous voltage.

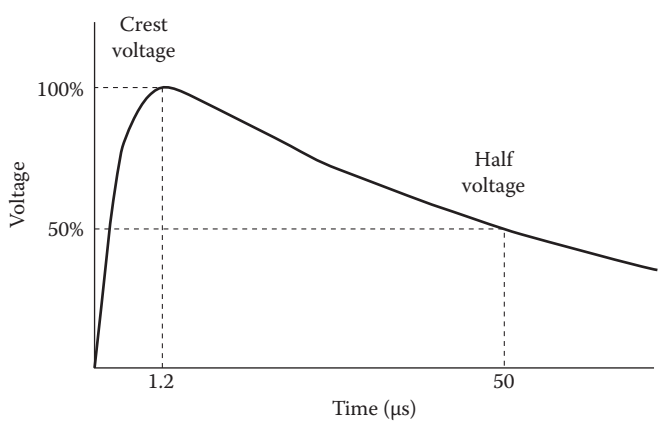

FIGURE 17.3 Standard full-wave lightning impulse.

www.EngineeringEbooksPdf.com

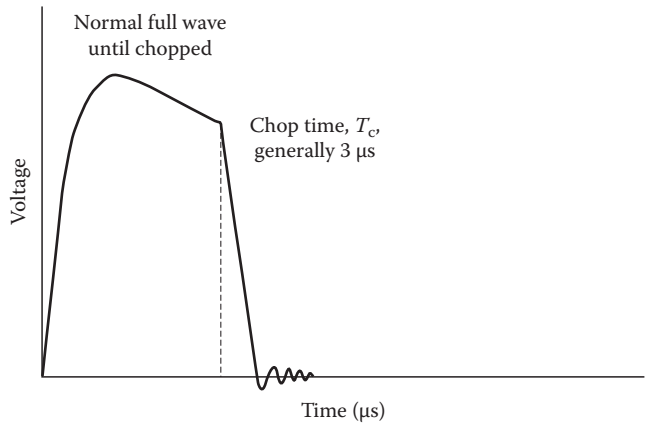

FIGURE 17.4 Standard chopped-wave lightning impulse.

In addition to the full-wave test and the chopped-wave test, a third type of test known as front-of-wave test is sometimes made. (The test is sometimes called the steepwave test or front-chopped test.) The front-of-wave test simulates a direct lightning strike on the transformer terminals. Although direct strokes to transformer terminals in substations of modern design have very low probabilities of occurrence, front-of-wave tests are often specified. The voltage wave for this test is chopped on the front of the wave before the prospective crest value is reached. The rate of rise of voltage of the wave is set to about 1000 kV/μs. Chopping is set to occur at a chop time corresponding to an assigned instantaneous crest value. Front-of-wave tests, when required, must be specified.

Lightning-impulse tests, including full-wave impulse and chopped-wave impulse test waves, are made on each line terminal of power transformers. The recommended sequence is:

1. One reduced-voltage, full-wave impulse, with crest value of 50%–70% of the required full-wave crest magnitude (BIL) to establish reference pattern waveforms (impulse voltage and current) for failure detection.
2. Two chopped-wave impulses, meeting the requirements of crest voltage value and time to chop, followed by:
3. One full-wave impulse with crest value corresponding to the BIL of the winding line terminal.

When front-of-wave tests are specified, impulse tests are carried out in the following sequence: one reduced full-wave impulse, followed by two front-of-wave impulses, two chopped-wave impulses, and one full-wave impulse.

Generally, impulse tests are made on line terminals of windings, one terminal at a time. Terminals not being tested are usually solidly grounded or grounded through resistors with values of resistance in the range of 300–450 Ω. The voltage on terminals not being tested should be limited to 80% of the terminal BIL. Details about connections, tolerances on waveshapes, voltage levels, and correction factors are given in the IEEE test code [2] and the IEEE impulse guide [4].

17.5.1.2.1 Lightning-Impulse Test Equipment

The generation, measurement, and control of impulse voltage waves is a very specialized subject. In this section, only a very brief general introduction to the subject is provided. Most impulse-generator designs are based on the Marx circuit. Figure 17.5 shows a schematic diagram of a typical Marx-circuit impulse generator with four stages. In principle, voltage multiplication is obtained by charging a set of parallel-connected capacitors in many stages of the impulse generator to a predetermined dc voltage, then momentarily reconnecting the capacitor stages in series to make the individual capacitor voltages add. The reconnection from parallel to series is accomplished through the controlled firing of a series

www.EngineeringEbooksPdf.com

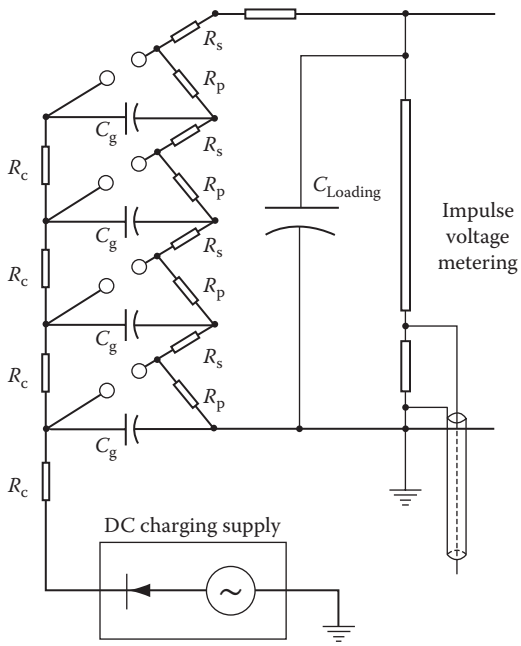

R_s = Series waveshaping resistors
R_p = Parallel waveshaping resistors
R_c = DC charging resistors
C_g = Generator stage capacitors
$C_{Loading}$ = Loading capacitor

FIGURE 17.5 Marx generator with four stages.

of adjustable sphere gaps, adjusted to be near breakdown at the dc charging voltage. After the capacitors are charged to the proper dc voltage level, a sphere gap in the first stage is made to flash over by some means. This initiates a cascade flashover of all the sphere gaps in the impulse generator. The gaps function as switches, reconnecting the capacitor stages from parallel to series, producing a generator output voltage that is approximately equal to the voltage per stage times the number of stages.

The desired time to crest value on the front of the wave and the time to half-crest value on the tail of the wave are controlled by wave-shaping circuit elements. These elements are indicated as R_c, R_p, and $C_{Loading}$ in Figure 17.5. Generally, control of the time to crest on the front of the wave is realized by changing the values of series resistance, the impulse-generator capacitance, and the load capacitance. Control of the time to 50% magnitude on the tail of the wave is realized by changing the values of parallel resistors and the load capacitance. Control of the voltage crest magnitude is provided by adjustment of the dc charging voltage and by changing the load on the impulse generator. The time of flashover for chopped waves is controlled by adjustment of gap spacings of the chopping gaps or the rod gaps.

The capacitor-charging current path for the impulse generator is shown in Figure 17.6. At steady state, each of the capacitors is charged to a voltage equal to the dc supply voltage. After the cascade firing of the sphere gaps, the main discharging current path becomes, in simplified form, that of Figure 17.7. The RC time constants of the dc charging resistors, R_c as defined in Figure 17.5, have values typically expressed in seconds, while the waveshape control elements, R_p and R_s as defined in Figure 17.5, have RC time constants typically expressed in microseconds. Hence, for the time period of the impulse-generator discharge, the relatively high resistance values of the charging resistors represent open circuits for the relatively short time period of the generator discharge. This is indicated by dotted lines in Figure 17.7.

www.EngineeringEbooksPdf.com

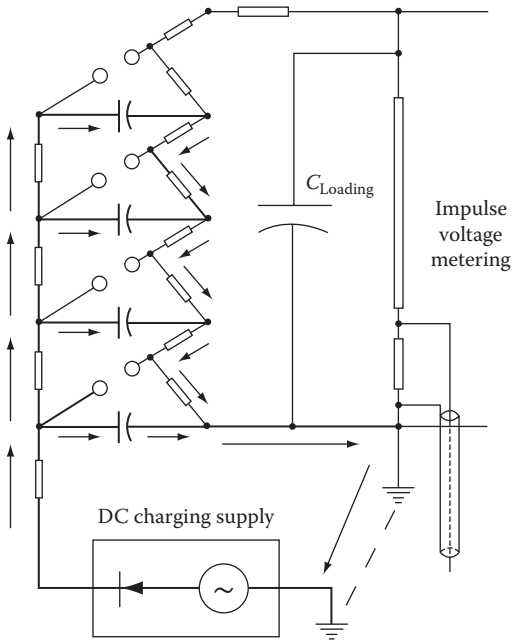

FIGURE 17.6 Charging the capacitors of an impulse generator.

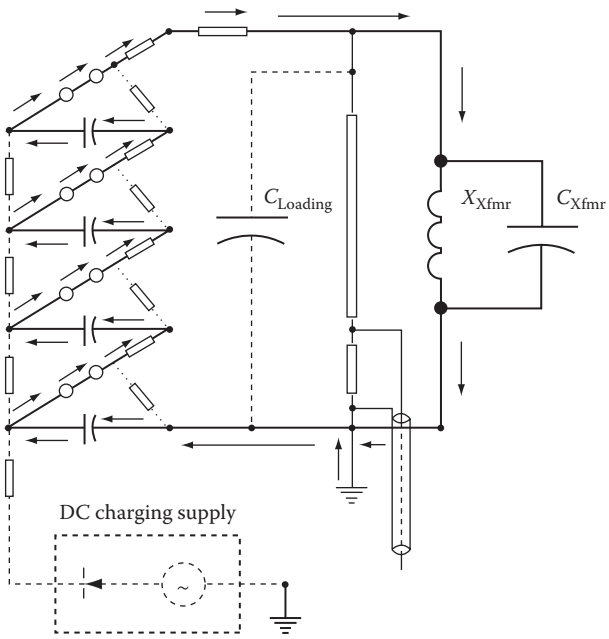

FIGURE 17.7 Discharging the capacitors of an impulse generator.

The discharge path shown in the figure is somewhat simplified for clarity: Significant currents do flow in the shunt wave-shaping resistors, R_p, and significant current also flows in the loading capacitor, $C_{Loading}$. These currents, which are significant in controlling the waveshape, are ignored in Figure 17.7.

The measurement of impulse voltage in the range of a million volts in magnitude requires the use of voltage dividers. Depending upon requirements, either resistive, capacitive, or optimally damped (RC)

www.EngineeringEbooksPdf.com

types of dividers, having stable ratios and fast response times, are utilized to scale the high-voltage impulses to provide a suitable input for instruments. Most impulse-test facilities utilize specially designed impulse oscilloscopes or, more recently, specially designed transient digitizers, for accurate measurement of impulse voltages.

Measurement of the transient currents associated with impulse voltages is carried out with the aid of special noninductive shunts or wideband current transformers included in the path of current flow. Usually, voltages proportional to impulse currents are measured with the impulse oscilloscopes or transient digitizers described earlier.

17.5.1.2.2 Impulse Test Setup

For consistent results it is important that the test setup be carefully made, especially with respect to grounding, external clearances, and induced voltages produced by impulse currents. Otherwise, impulse-failure detection analysis could be flawed. One example of proper impulse-test setup is shown in Figure 17.8. This figure illustrates proper physical arrangement of the impulse generator, main circuit, chopping circuit, chopping gap, test object, current shunt, voltage measuring circuit, and voltage divider. High voltages and currents at high frequencies in the main circuit and the chopping circuit can produce rapidly changing electromagnetic fields, capable of inducing unwanted noise and error voltages in the low-voltage signal circuits connected to the impulse-recorder inputs. The purpose of this physical arrangement is to minimize these effects.

17.5.1.2.3 Impulse-Test Failure Detection

To accomplish failure detection or to verify the absence of a dielectric failure in the transformer insulation system, the impressed impulse-voltage waveforms and the resulting current waveforms of the full-wave test are compared with the reduced full-wave test reference waveforms. The main idea behind failure detection in transformers is that if no dielectric breakdowns or partial discharges occur, then the final full-wave test voltage and current waves will exhibit waveforms identical to the initial reduced full-wave reference tests when appropriately scaled. The occurrence of a dielectric breakdown would produce a sudden change in the inductance-capacitance network seen at the tested terminals of the transformer,

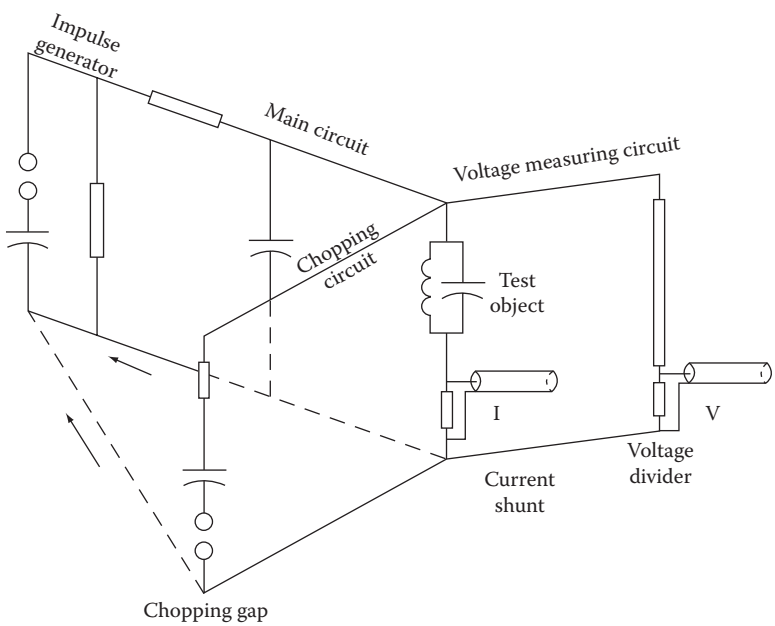

FIGURE 17.8 Impulse-test setup.

www.EngineeringEbooksPdf.com

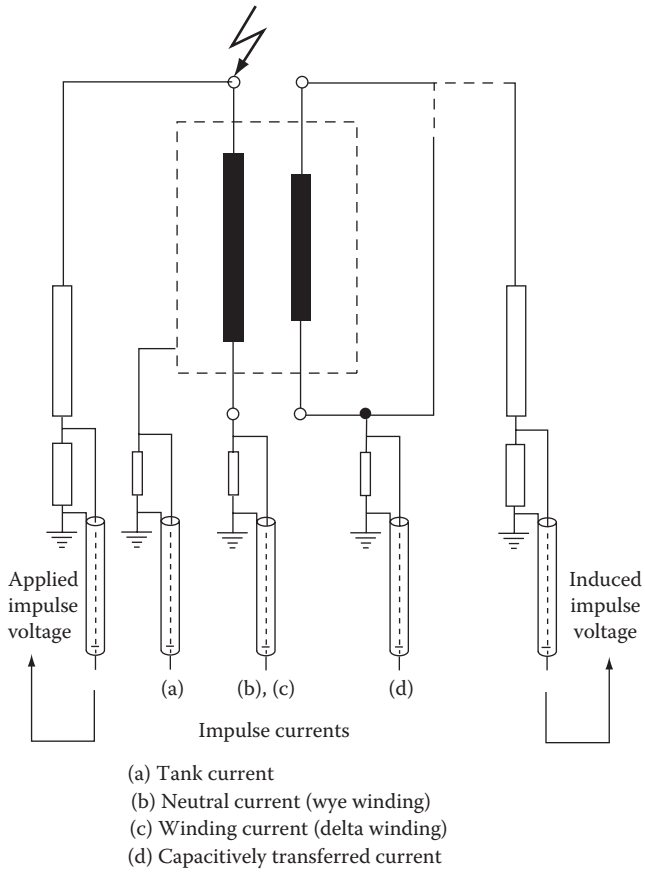

FIGURE 17.9 Impulse-current measurement locations.

causing a deviation in the test waveforms compared with the reference waveforms. The act of comparing the reduced full-wave records and the full-wave records is sometimes called "matching" the waves. If they are identical, the waves are said to be *matched*. Any differences in the waves, judged to be significant, are said to be *mismatches*. If there are mismatches, something is not correct, either in the test setup or in the dielectric system of the transformer. Various waveforms of voltages and currents associated with different types of defects are presented in great detail in the IEEE impulse guide [4]. When digital recorders are employed, methods of waveform analysis using the frequency dependence of the transformer impedance, transformer transfer function, and other digital waveform-analysis tools are now being developed and used to aid failure detection. Measurements of the voltages and currents in various parts of the transformer under test can aid in location of dielectric defects. These schemes are summarized in Figure 17.9.

17.5.1.3 Switching-Impulse Test

Man-made transients, as opposed to nature-made transients, are often the result of switching operations in power systems. Switching surges are relatively slow impulses. They are characterized by a wave that:

1. Rises to peak value in no less than 100 μs
2. Falls to zero voltage in no less than 1000 μs
3. Remains above 90% of peak value, before and after time of crest, for no less than 200 μs

This is shown in Figure 17.10. Generally, the crest value of the switching-impulse voltage is approximately 83% of the BIL.

www.EngineeringEbooksPdf.com

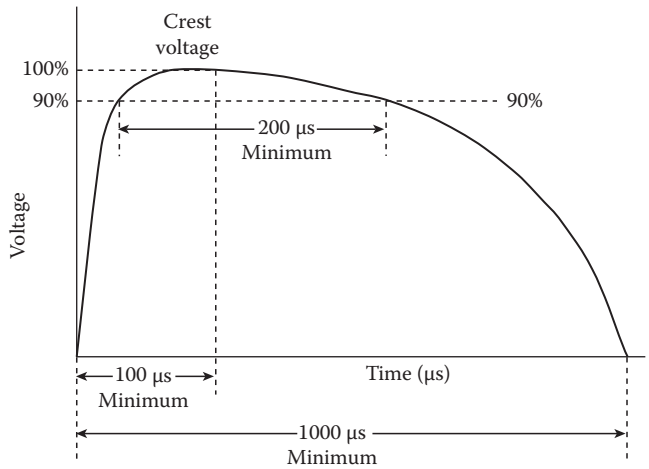

FIGURE 17.10 Standard switching-impulse wave.

Voltages of significant magnitude are induced in all windings due to core-flux buildup that results from the relatively long duration of the impressed voltage during the switching-impulse test. The induced voltages are approximately proportional to the turns ratios between windings. Depending upon the transformer construction, shell-form versus core-form, three-leg versus five-leg construction, etc., many connections for tests are possible. Test voltages at the required levels can be applied directly to the winding under test, or they can be induced in the winding under test by application of switching impulse voltage of suitable magnitude across another winding, taking into consideration the turns ratio between the two windings. The magnitudes of voltages between windings and between different phases depend on the connections. This is discussed in great detail in the IEEE impulse guide [4].

Because of its long duration and high peak-voltage magnitude, application of switching impulses on windings can result in saturation of the transformer core. When saturation of the core occurs, the resulting waves exhibit faster-falling, shorter-duration tails. By reversing polarity of the applied voltages between successive shots, the effects of core saturation can be reduced. Failures during switching-impulse tests are readily visible on voltage wave oscillograms and are often accompanied by loud noises and external flashover.

Switching-impulse tests are generally carried out with impulse generators having adequate energy capacity and appropriate wave-shaping resistors and loading capacitors.

17.5.2 Low-Frequency Dielectric Tests

17.5.2.1 Purpose of Low-Frequency Dielectric Tests

When high-frequency impulse voltages are applied to transformer terminals, the stress distributions within the windings are not linear but depend on the inductances and capacitances of the windings. Also, the effects of oscillations penetrating the windings produce complex and changing voltage distributions. Low-frequency stresses that result from power-frequency overvoltage, on the other hand, result in stresses with a linear distribution along the winding. Because the insulation system is stressed differently at low frequency, a second set of tests is required to demonstrate dielectric withstand under power-frequency conditions. The low-frequency dielectric tests demonstrate that the power transformer insulation system has the necessary dielectric strength to withstand the voltages indicated in the tables of the standards for low-frequency tests.

www.EngineeringEbooksPdf.com

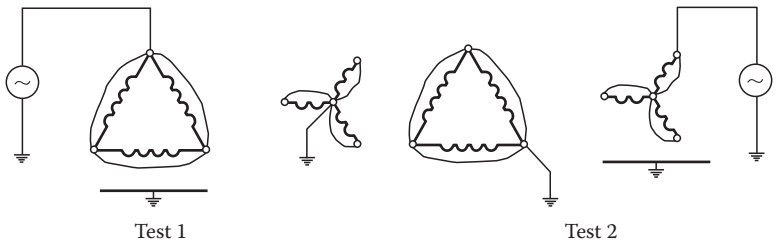

FIGURE 17.11 Applied-voltage tests on two-winding transformers.

17.5.2.2 Applied-Voltage Test

The applied-voltage test is often called the hipot test. The purpose of this test is to verify the major insulation in transformers. More specifically, the purpose is to ensure that the insulation between windings and the insulation of windings to ground can withstand the required power-frequency voltages, applied for 1-min duration. For fully insulated windings, the test voltage levels are related to the BIL of the windings. For windings with graded insulation, test levels correspond to the winding terminal with the lowest BIL rating.

For two-winding transformers, there are two applied tests. Test 1 is the applied-voltage test of the HV winding, which is carried out by connecting all HV terminals together and connecting them to a high-voltage test set, as shown in Figure 17.11. The LV terminals are connected together and connected to ground. Power frequency voltage of the correct level with respect to ground is applied to the HV terminals with LV terminals grounded. In this test, the insulation system between HV to ground and between HV to LV is stressed. A second test, Test 2, is made at the correct level of test voltage for the LV winding, with the LV winding terminals connected together and connected to the high-voltage test set. In Test 2, the HV winding terminals are connected together and to ground. In the second test, the insulation system LV to ground and LV to HV are stressed. This is also shown in Figure 17.11.

A dielectric failure during this test is the result of internal or external flashover or tracking. Internal failures may be accompanied by a loud noise heard on the outside and "smoke and bubbles" seen in the oil.

17.5.2.3 Induced-Voltage Test

The induced-voltage test, with monitoring of partial discharges during the test, is one of the most significant tests to demonstrate the integrity of the transformer insulation system. During this test, the turn-to-turn, disc-to-disc, and phase-to-phase insulation systems are stressed simultaneously at levels that are considerably higher than during normal operation. Weaknesses in dielectric design, processing, or manufacture may cause partial discharge activity during this test. Partial discharges are generally monitored on all line terminals rated 115 kV or higher during the induced-voltage test. This test produces the required voltages in the windings by magnetic induction. Because the test voltages are significantly higher than rated voltages, the core would ordinarily saturate if 60-Hz voltage were employed. To avoid core saturation, the test frequency is increased to a value normally in the range of 100–400 Hz.

Tests for Class II power transformers require an extended duration induced test. Class II is defined in ANSI and IEEE standards [1]. The test is usually made by raising the voltage on the LV windings to a value that induces 1.5 times maximum operating voltage in the HV windings. If no partial discharge activity is detected, the voltage is raised to the enhancement level (usually 1.73 per unit [p.u.]) for a time period of 7200 cycles at the test frequency. Voltage is then reduced to the 1.5-p.u. level and held for a period of 1 h. This test is described graphically in Figure 17.12. In the United States, PD (partial discharge) level measurements are carried out with wideband PD detectors or narrowband RIV (radio influence voltage) meters. The wideband PD detectors read apparent charge in picocoulombs (pC). The narrow-band RIV meters read the radio influence voltage in microvolts (μV). Often both instruments are used, taking wideband pC and narrowband μV readings simultaneously.

www.EngineeringEbooksPdf.com

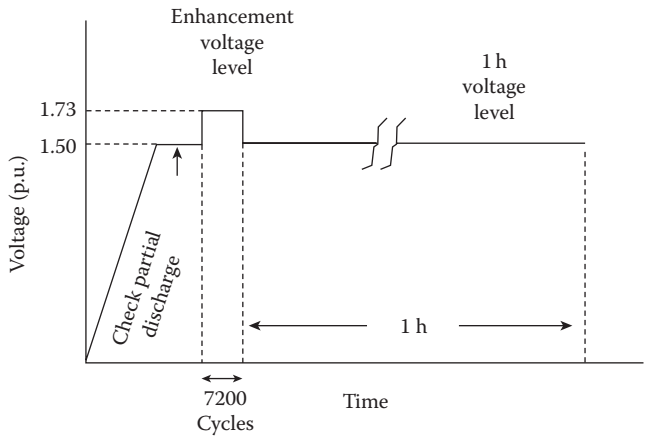

FIGURE 17.12 Induced-voltage test for Class II power transformers.

During the 1-h period, partial discharge readings are taken every 5 min. The criteria for a successful test are:

- The magnitude of partial discharge activity does not exceed 100 μV (500 pC).
- After the PD level has stabilized, any increase in partial discharge activity does not exceed 30 μV (150 pC).
- The partial discharge levels during the 1-h period do not show an increasing trend.
- There is no sustained increase in partial discharge level during the last 20 min of the test.

The test circuit for PD measurement during the induced-voltage test is shown in Figure 17.13. The bushing capacitance tap is connected to a coupling impedance unit, which provides PD signals to the PD

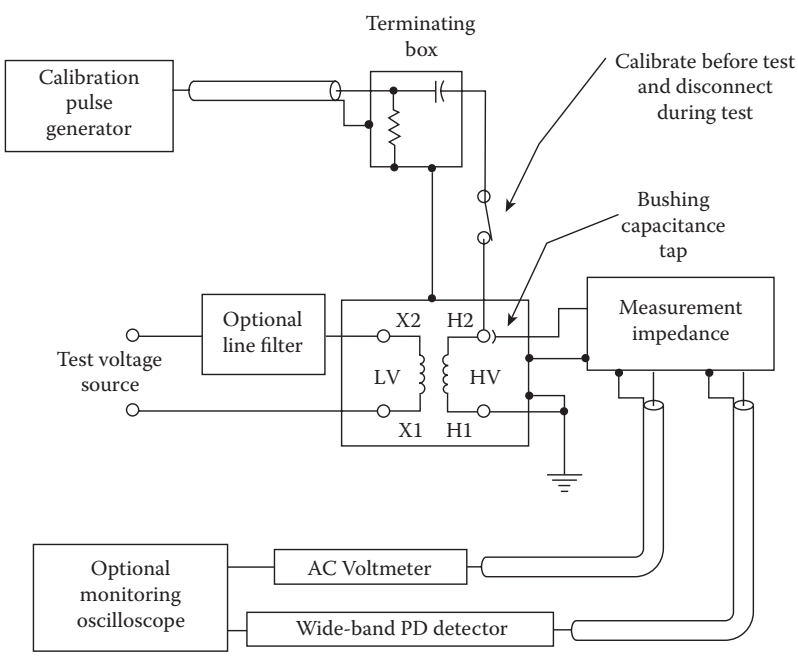

FIGURE 17.13 Test circuit for partial-discharge measurement during the induced-voltage test.

www.EngineeringEbooksPdf.com

detection unit. Methods for measurement and calibration are described in detail in the IEEE test code [2] and in the IEEE partial discharge measurement guide [5].

If there is significant level of PD activity during the test, it is desirable to identify the location of the PD source inside the transformer so that the problem can be corrected. This will ensure PD-free operation. Methods for location of PD sources inside the transformer often are based on triangulation. Ultrasonic acoustic waves arriving at transformer tank surfaces due to PD activity are monitored at various locations on the tank walls. Knowing wave propagation velocities and travel paths, it is possible to locate sources of PD activity with reasonable accuracy.

17.6 Performance Characteristics

17.6.1 No-Load Loss and Excitation-Current Measurements

17.6.1.1 Purpose of No-Load Loss Measurements

A transformer dissipates a constant no-load loss as long as it is energized at constant voltage, 24 h a day, for all conditions of loading. This power loss represents a cost to the user during the lifetime of the transformer. Maximum values of the no-load loss of transformers are specified and often guaranteed by the manufacturer. No-load-loss measurements are made to verify that the no-load loss does not exceed the specified or guaranteed value.

17.6.1.2 Nature of the Quantity Being Measured

Transformer no-load loss, often called core loss or iron loss, is the power loss in a transformer excited at rated voltage and frequency but not supplying load. The no-load loss comprises three components:

1. Core loss in the core material
2. Dielectric loss in the insulation system
3. I^2R loss due to excitation current in the energized winding

The no-load loss of a transformer is primarily caused by losses in the core steel (item 1, above). The remaining two sources are sometimes ignored. As a result, the terms *no-load loss, core loss,* and *iron loss* are often used interchangeably. *Core loss* and *iron loss,* strictly speaking, refer only to the power loss that appears within the core material. The following discussion on no-load loss, or core loss, will explain why the average-voltage voltmeter method, to be described later, is recommended. The magnitude of no-load loss is a function of the magnitude, frequency, and waveform of the impressed voltage. These variables affect the magnitude and shape of the core magnetic flux waveform and hence affect the value of the core loss. It has been verified through measurements on power and distribution transformers that core loss also depends, to some extent, upon the temperature of the core. According to the IEEE test code [2], the approximate rate of change of no-load loss with core temperature is 0.00065 p.u. core loss increase for each °C reduction in core temperature. The two main components of the core loss are hysteresis loss and eddy-current loss. The change in eddy-current loss, due to a change in the resistivity of the core steel as temperature changes, appears to be one factor that contributes to the observed core-loss temperature effect. The hysteresis loss magnitude is a function of the peak flux density in the core-flux waveform. When the impressed voltage waveform is distorted (not a pure sine wave), the resulting peak flux density in the flux waveform depends on the average absolute value of the impressed voltage wave. Eddy-current loss is a function of the frequency of the power source and the thickness of the core-steel laminations. Eddy loss is strongly influenced by harmonics in the impressed voltage. The IEEE transformer test code [2] recommends the average-voltage voltmeter method, to be described below, for measuring no-load loss.

17.6.1.3 How No-Load Loss Is Measured

The measurement of no-load loss, according to the average-voltage voltmeter method, is illustrated in Figure 17.14. Voltage and current transformers are required to scale the inputs for voltmeters, ammeters,

www.EngineeringEbooksPdf.com

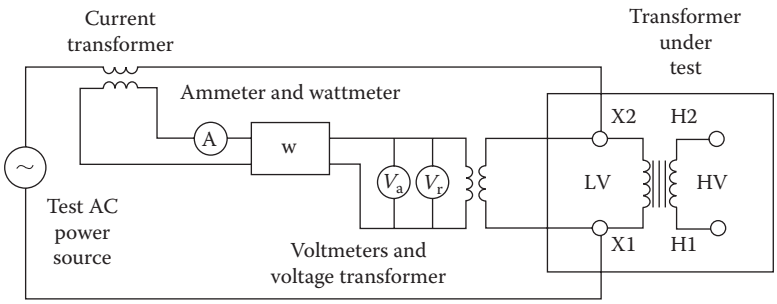

FIGURE 17.14 Test circuit for no-load-loss measurement.

and wattmeters. Three-phase no-load-loss measurements are carried out the same way, except that three sets of instruments and instrument transformers are utilized. The test involves raising voltage on one winding, usually the low-voltage winding, to its rated voltage while the other windings are in open circuit. Two voltmeters connected in parallel are employed. The voltmeter labeled V_a in Figure 17.14 represents an average-responding, rms-calibrated voltmeter. The voltmeter labeled V_r represents a true rms-responding voltmeter. Harmonics in the impressed voltage will cause the rms value of the waveform to be different from the average-absolute (rms-scaled) value, and the two voltmeter readings will differ. When the voltage reading, as measured by the average-responding voltmeter, reaches a value corresponding to the rated voltage of the excited winding, readings are taken of the rms current, the rms voltage, and the no-load power. The ratio of the measured rms current to the rated load current of the excited winding, expressed in percent, is commonly referred to as the percent excitation current. The measured no-load loss is corrected to a sine-wave basis by a formula given in the IEEE test code [2], using the readings of the two voltmeters. The correction is shown below. The corrected value is reported as the no-load loss of the transformer.

$$P_c = \frac{P_m}{P_1 + (V_r/V_a)^2 P_2} \tag{17.1}$$

where

P_c is the corrected (reported) value of no-load loss
P_m is the measured value of no-load loss
V_a is the reading of the average-responding, rms-calibrated voltmeter
V_r is the reading of the true-rms-responding voltmeter
P_1 and P_2 are the per-unit hysteresis and per-unit eddy-current losses, respectively

According to the IEEE test code [2], if the actual values of P_1 and P_2 are not available, it is suggested that the two loss components be assumed equal in value, assigning each a value of 0.5 p.u.

17.6.2 Load Loss and Impedance Measurements

17.6.2.1 Purpose of Load Loss Measurements

A transformer dissipates a load loss that depends upon the transformer load current. Load loss is a cost to the user during the lifetime of the transformer. Maximum values of the load loss of transformers at rated current are specified and often guaranteed by the manufacturer. Load-loss measurements are made to verify that the load loss does not exceed the specified or guaranteed value.

17.6.2.2 Nature of the Quantity Being Measured

The magnitude of the load loss is a function of the transformer load current. Its magnitude is zero when there is no load on the transformer. Load loss is always given for a specified transformer load, usually

www.EngineeringEbooksPdf.com

at rated load. Transformer load loss, often called copper loss or winding loss, includes I^2R losses due to load current in the winding conductors and stray losses in various metallic transformer parts due to eddy currents induced by leakage fields. Stray losses are produced in the winding conductors, in core clamps, in metallic structural parts, in magnetic shields, and in tank walls due to the presence of leakage fields. Stray losses also include power loss due to circulating currents in parallel windings and in parallel conductors within windings.

Because winding resistance varies with conductor temperature, and because the resistivities of the structural parts producing stray losses vary with temperature, the transformer load losses are a function of temperature. For this reason, a standard reference temperature (usually 85°C) for reporting the load loss is established in ANSI and IEEE standards [1]. To correct the load-loss measurements from the temperature at which they are measured to the standard reference temperature, a correction formula is provided in the IEEE test code [2]. This correction involves the calculation of winding I^2R losses, where I is the rated current of the winding in amperes, and R is the measured dc resistance of the winding. The I^2R losses and the stray losses are separately corrected and combined in the formula given in the standard. The measurement of the dc winding resistance, R, is covered in Section 17.6.3. Stray losses are determined by subtracting the I^2R losses from the measured total load losses. All of this is covered in detail in the IEEE test code [2]. The formula for this conversion is stated in general in Equation 17.2:

$$W_{LL} = \frac{\left(I_p^2 R_p + I_s^2 R_s\right)(T_k + T_r)}{(T_k + T_m)} + \frac{\left(W_m - I_p^2 R_p - I_s^2 R_s\right)(T_k + T_m)}{(T_k + T_r)} \tag{17.2}$$

where

T_r is the reference temperature (°C)
T_m is the temperature at which the load loss is measured (°C)
W_m is the load loss (W) as measured at temperature T_m (°C)
W_{LL} is the load loss (W) corrected to a reference temperature T_r (°C)
T_k is a winding material constant: 234.5 for copper, 225 for aluminum
R_p and R_s are, respectively, the primary and secondary resistances (Ω)
I_p and I_s are the primary and secondary rated currents (A)

It can be seen from Equation 17.2 that the measurement of load losses and correction to the reference temperature involves the measurement of five separate quantities:

1. Electric power (the load loss as measured)
2. Temperature (the temperature at time of test)
3. Resistance of the primary winding (at a known temperature)
4. Resistance of the secondary winding (at a known temperature)
5. Electric current (needed to adjust the current to the required values)

Another characteristic of transformer load loss is its low power factor. Most often, when considering electric-power measurement applications, the power factor of the load being measured is relatively high, usually exceeding 80%. For large modern power transformers, the power factor can be very low, in the range from 1% to 5%. The measurement of electric power at very low power factor requires special consideration, as discussed in the next section.

17.6.2.3 How Load Loss Is Measured

Load losses are normally measured by connecting one winding, usually the low-voltage winding, to a short circuit with adequately sized shorting bars and connecting the other winding, usually the high-voltage winding, to a power-frequency voltage source. The source voltage is adjusted until the impressed voltage causes rated current to flow in both windings. Input rms voltage, rms current, and electric power

www.EngineeringEbooksPdf.com

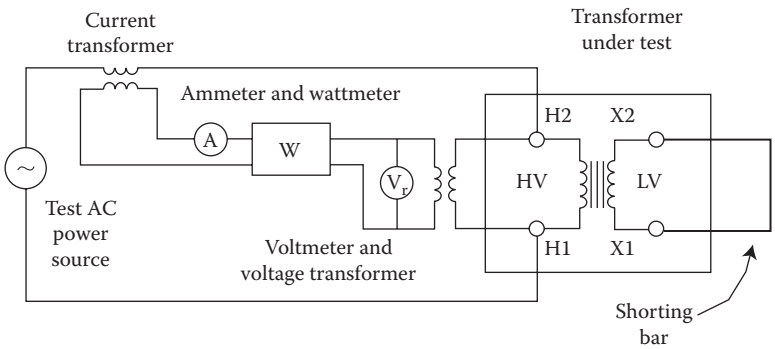

FIGURE 17.15 Test circuit for load-loss measurement.

are then measured. Figure 17.15 shows a circuit commonly used for measurement of load losses of a single-phase transformer. Three-phase measurement is carried out in the same way but with three sets of instruments and instrument transformers. Precision scaling devices are usually required because of the high magnitudes of current, voltage, and power involved.

The applied test voltage when the transformer is connected as in Figure 17.15, with rated currents in the windings, is equal to the impedance voltage of the transformer. Hence impedance, or impedance voltage, is also measured during the load-loss test. The ratio of the measured voltage to the rated voltage of the winding, multiplied by 100, is the percent impedance voltage of the transformer. This quantity is commonly called "percent impedance" or, simply, "impedance."

17.6.2.4 Discussion of the Measurement Process

The equivalent circuit of the transformer being tested in the load-loss test and the phasor diagram of test voltage and current during the test are shown in Figure 17.16. The load-loss power factor for the load-loss test is $\cos\theta = E_R/E_Z$. Because the transformer leakage impedance, consisting of R and X in Figure 17.16, is mainly reactive, and more so the larger the transformer, the power factor during the load-loss test is very low. In addition, there is a trend in modern transformers to create designs with lower losses due to increased demands for improved efficiency and transformer load-loss evaluations for optimal life-cycle costs. Transformer designs for low values of load loss lead to reductions in the equivalent resistance shown in Figure 17.16, and hence to low values for the quantity, E_R, which translates to lower values for

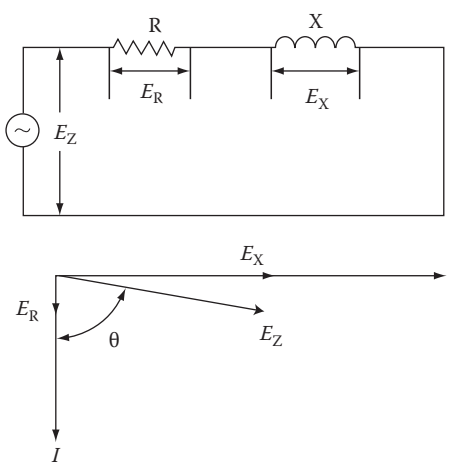

FIGURE 17.16 Equivalent circuit and phasor diagram for load-loss test.

www.EngineeringEbooksPdf.com

the load-loss power factor in modern transformers. In fact the load-loss power factors for large modern transformers are often very low, in the range from 0.01 to 0.05 p.u. Under circuit conditions with very low power factor, the accurate measurement of electric power requires special scaling devices having very low phase-angle error and power measuring instruments having high accuracy at low power factor. In addition to the IEEE test code [2], a Transformer Loss Measurement Guide, C57.123, has recently been developed by a working group of the IEEE PES Transformers Committee. When generally available, it will provide a complete background and the basis for carrying out measurements and calibrations to ensure accurate values of reported losses as required by ANSI and IEEE standards [1].

Because the magnitudes of load losses and impedance depend upon the tap positions of the deenergized tap changer (DETC) and the load tap changer (LTC), if present, load-loss and impedance-voltage measurements are usually carried out in the rated voltage connection and at the tap extremes. If the transformer under test has multiple MVA ratings that depend on the type of cooling, the tests are normally carried out at all ratings.

17.6.3 Winding Resistance Measurements

17.6.3.1 Purpose of Winding Resistance Measurements

Measurements of dc winding resistance are of fundamental importance because they form the basis for determining the following:

Resistance measurements, taken at known temperatures, are used in the calculation of winding conductor I^2R losses. The I^2R losses at known temperatures are used to correct the measured load losses to a standard reference temperature. Correction of load losses is discussed in Section 17.6.2.

Resistance measurements, taken at known temperatures, provide the basis to determine the temperature of the same winding at a later time by measuring the resistance again. From the change in resistance, the change in temperature can be deduced. This measurement is employed to determine average winding temperatures at the end of heat run tests. Taking resistance measurements after a heat run test is discussed in Section 17.6.4.

Resistance measurements across the transformer terminals provide an assessment of the quality of internal connections made to the transformer windings. Loose or defective connections are indicated by unusually high or unstable resistance readings.

17.6.3.2 Nature of the Quantity Being Measured

The dc winding resistance differs from the value of resistance indicated for the resistor shown in Figure 17.16 or the resistors that appear in textbook illustrations of the *PI* or *T* equivalent circuits of transformers to represent the resistance of the windings. The resistors in the equivalent circuits include the effects of winding I^2R loss, eddy loss in the windings, stray losses in structural parts, and circulating currents in parallel conductors—namely, they represent the resistive components of the load loss. The resistors shown in the equivalent circuits can be thought of as representing an equivalent ac resistance of the windings. The dc resistance of the windings is a different quantity, one that is relevant for calculating I^2R, for determining average winding temperature, and for evaluating electrical connections.

17.6.3.3 How Winding-Resistance Measurements Are Made

The measurement of power transformer winding resistance is normally done using the voltmeter-ammeter method or using a ratiometric method to display the voltage-current ratio directly. A circuit for the measurement of winding resistance is shown in Figure 17.17. A dc source is used to establish the flow of steady direct current in the transformer winding to be measured. After the R-L transient has subsided, simultaneous readings are taken of the voltage across the winding and the current through the winding. The resistance of the winding is determined from these readings based on Ohm's law.

www.EngineeringEbooksPdf.com

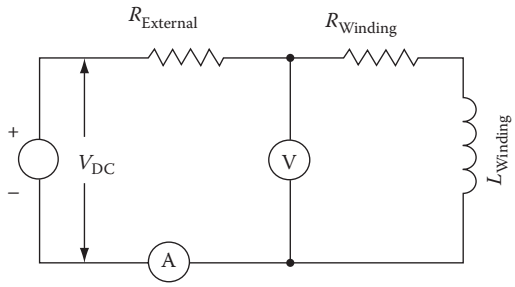

FIGURE 17.17 Circuit for measuring winding resistance.

17.6.3.4 Discussion of the Measurement Process

If a dc voltage is applied as a step to a series R-L circuit, the current will rise exponentially with a time constant of L/R. This is familiar for the case where both resistance and inductance remain constant during the transient period. For a transformer winding, however, it is possible for the true resistance, the apparent resistance, and the inductance of the winding to change with time. The true resistance may change if the direct current is of high-enough magnitude and is applied long enough to heat the winding substantially, thereby changing its resistance during the measurement. The inductance changes with time because of the nonlinear B-H curve of the core steel and varies in accordance with the slope of the core-steel saturation curve. In addition, there is an apparent resistance, R_a, during the transient period.

$$R_a = \frac{V}{I} = R + \frac{L}{I}\frac{dI}{dt} \tag{17.3}$$

Note that the apparent resistance, R_a, is higher than the true resistance, R, during the transient period and that the apparent resistance derived from the voltmeter and ammeter readings equals the true resistance only after the transient has subsided.

Resistance measurement error due to heating of the winding conductor is usually not a problem in testing transformers, but the possibility of this effect should be taken into consideration, especially for some low-current distribution transformer windings where the dc current can be significant compared with the rated current. It is more likely that errors will occur because of meter readings taken before core saturation is achieved. The process involved in core saturation is described below.

Compared with the exponential current-versus-time relationship for the R-L circuit with constant R and constant L, the current in a transformer winding, when a dc voltage is first applied, rises slowly. The slow rate of rise comes about because of the high initial impedance of the winding. The initially high impedance results from the large effective inductance of the winding with its iron core. As the current slowly increases, the flux density in the core slowly rises until the core begins to saturate. At this point, the winding no longer behaves like an iron-core coil and instead behaves like an air-core coil, with relatively low inductance. The rate of rise of the current increases for a period as the core saturates; then the current levels off at a steady-state value. Typical shapes for the voltage, current, and apparent resistance are shown in Figure 17.18. The magnitude of the dc voltage affects the rate at which flux builds up in the core, since $V = N(d\Phi/dt)$. The higher the magnitude of the dc voltage, the shorter is the time to saturation because of a higher value for $d\Phi/dt$. At the same time, though, the coil must be able to provide the required magnetomotive force in ampere turns, $N \times I$, needed to force the core into saturation, which leads to a minimum value for the dc current. Of course, there is an upper limit to the value for dc current, namely the point at which conductor heating would disturb the resistance measurement.

Note the time scale of the graph in Figure 17.18. It is very important that the steady-state dc current be attained before meter readings are taken. If this is not done, errors in excess of 20% are easily realized.

www.EngineeringEbooksPdf.com

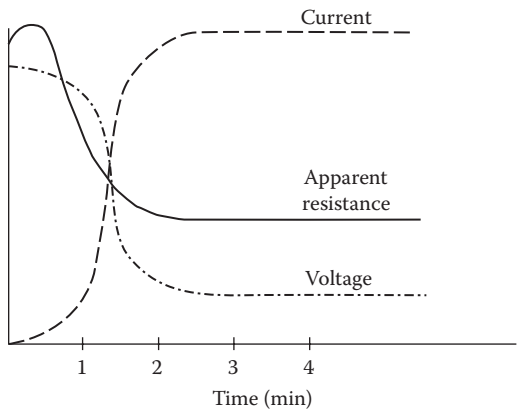

FIGURE 17.18 Trend of current, voltage, and apparent resistance with time.

17.6.3.5 Winding Resistance and Average Winding Temperature

Two of the three purposes listed above for measuring the dc resistance of a transformer winding inherently involve a concomitant measurement of temperature. When measuring resistance for the purpose of calculating I^2R at a given temperature, the I^2R value obtained will be used to determine the load-loss value at a different temperature. When the winding resistance is measured before and during a heat run, the determination of average winding temperature at the end of a heat run test requires knowledge of winding resistance at two temperatures.

The winding dc resistance at two temperatures, T_1 and T_2, will have values of R_1 and R_2, respectively, at the two temperatures. The functional relationship between winding resistance and average temperature is shown in Equation 17.4:

$$\frac{R_1}{R_2} = \frac{T_1 + T_k}{T_2 + T_k} \tag{17.4}$$

where

R_1 is the value of winding resistance, corresponding to average winding temperature of T_1
R_2 is the value of winding resistance, corresponding to average winding temperature of T_2
T_k is 234.5°C for copper, 225°C for aluminum

Correction of load loss for temperature is covered in Section 17.6.2. Determination of average winding temperature in a heat run test is covered in Section 17.6.4.

17.6.4 Heat Run Tests

17.6.4.1 Purpose of Heat Run Tests

The maximum allowable average and hottest-spot temperature rises of the windings over ambient temperature and the maximum allowable temperature rise of the top oil of the transformer are specified by ANSI and IEEE standards and are guaranteed by the manufacturer. The purpose of temperature-rise tests is to demonstrate that the transformer will deliver rated load without exceeding the guaranteed values of the temperature rises of the windings and oil. According to the ANSI and IEEE standards, these tests are performed at the minimum and maximum load ratings of a transformer.

17.6.4.2 Test Methods

For factory testing, it is not practical to connect the transformer to a load impedance with full rated secondary voltage applied to the simulated load. Although this would most directly simulate service

www.EngineeringEbooksPdf.com

conditions, most of the total test input power would dissipate in the load impedance. The load power, which equals the load rating of the transformer, is much larger than the sum of no-load and load losses that dissipate in the transformer. The electrical heating of the load would not contribute to transformer heating. Electric power consumption for the test would be excessive, and the test would not be practical for routine testing.

In factory tests according to methods specified in the ANSI and IEEE standards, several artificial loading schemes can be used to simulate heat dissipation caused by the load and no-load losses of the transformer. The back-to-back loading method, described in the IEEE test code [2], requires two identical transformers and is often used for heat runs of distribution transformers. For power transformers, it is most common to use the short-circuit loading method, as specified in the IEEE test code [2]. The test setup is similar to that used for measurement of load loss and impedance voltage. One winding is connected to a short circuit, and sufficient voltage is applied to the other winding to result in currents in both windings that generate the required power loss to heat the oil and windings.

17.6.4.3 Determination of the Top, Bottom, and Average Oil Rises

This discussion applies to the short-circuit loading method. Initially, the test current is adjusted to provide an input power loss equal to the no-load loss plus the load loss. This can be called the total loss. The total loss is corrected to the guaranteed temperature rise plus ambient temperature. During this portion of the heat run, the windings provide a heat source for the oil and the oil cooling system. The winding temperatures will be higher than expected because higher-than-rated currents are applied to the windings, but here only the oil temperature rises are being determined. For an oil-filled power transformer, the total power loss for a given rating is maintained until the top-oil temperature rise is stabilized. Stabilization is defined as no more than 1°C change in three consecutive 1-h periods.

After stabilization is achieved, the top- and bottom-oil readings are used to determine the top, bottom, and average oil temperature rises over ambient at the specified load.

17.6.4.4 Determination of the Average Winding-Temperature Rise

After the top, bottom, and average oil temperature rises are determined, the currents in the windings are reduced to rated value for a period of 1 h. Immediately following this 1-h period, the ac power leads are disconnected, and resistance measurements are carried out on both windings. The total time from disconnection of power and the first resistance readings should be as short as possible, typically less than 2 min—certainly not more than 4 min. Repeated measurements of winding resistance are carried out for a period of 10–15 min as the windings cool down toward the surrounding average oil temperature. The average oil temperature is itself falling, but at a much slower rate (with a longer time constant). Data for the changing resistance versus time is then plotted and extrapolated back to the instant of shutdown. With computers, the extrapolation can be done using a regression-based curve-fitting approach. The extrapolated value of winding resistance at the instant of shutdown is used to calculate winding temperature, using the method discussed below, with some correction for the drop in top-oil rise during the 1-h loading at rated current. The winding temperature, thus determined, minus ambient temperature is equal to the winding temperature rise at a given loading.

Similar tests are repeated for all ratings for which temperature rise tests are required.

17.6.4.5 Determining the Average Temperature by Resistance

The average winding temperature, as determined by the following method, is sometimes called the "average winding temperature by resistance." The word *measurement* is implied at the end of this phrase. The conversion of measured winding resistance to average winding temperature is accomplished as follows. Initial resistance measurements are made at some time before commencement of the heat run when the transformer is in thermal equilibrium. When in equilibrium, the assumption can be made that the temperature of the conductors is uniform and is equal to that of the transformer oil surrounding the coils. Initial resistance measurements are made and recorded, along with the oil temperature.

www.EngineeringEbooksPdf.com

This measurement is sometimes called the cold-resistance test, so the winding resistance measured during the test will be called the cold resistance R_c, and the temperature will be called the cold temperature T_c. At the end of the heat run, R_h, the hot resistance is determined from the time series of measured resistance values by extrapolation to the moment of shutdown. The formula given below is used to determine T_h, the hot temperature, knowing the hot resistance, cold resistance, and the cold temperature. This calculated temperature is the average winding temperature by resistance.

$$T_h = \frac{R_h}{R_c}[T_c + T_k] - T_k \tag{17.5}$$

where

T_h is the "hot" temperature
T_c is the "cold" temperature
R_h is the "hot" resistance
R_c is the "cold" resistance
T_k is a material constant: 234.5°C for copper, 225°C for aluminum

Accurate measurements of R_c and T_c during the cold-resistance test, as well as accurate measurements of hot winding resistance, R_h, at the end of the heat run are extremely critical for accurate determination of average winding temperature rises by resistance. The reason for this will be evident by analyzing the above formula. The following discussion illustrates how measurement errors in the three measured quantities, R_h, R_c, and T_c, affect the computed quantity, T_h, via the functional relationship by which T_h is computed.

Shown in Table 17.2 are computed values for T_h and the resulting error, e_{Th}, in the computation of T_h for sample sets of the measured quantities R_h, R_c, and T_c, measured in error by the amounts e_{Rh}, e_{Rc}, and e_{Tc}, respectively. Let us examine this table row by row. The way that measurement error propagates in the calculation is shown in the formula below for copper conductors.

$$(T_h + e_{Th}) = \frac{(R_h + e_{Rh})}{(R_c + e_{Rc})}[(T_c + e_{Tc}) + 234.5] - 234.5 \tag{17.6}$$

In row 1 of Table 17.2, there is no measurement error. The sample shows a set of typical measured values. The value for T_h in this row can be considered the "correct answer." In row 2 the cold-resistance measurement was 1% too high, causing the calculated value of T_h to be 3.6% too low. This amplification of the relative measurement error is due to the functional relationship employed to perform the calculated result. This example illustrates the importance of measuring the resistance very carefully and accurately. Similarly, in row 3 a hot-resistance reading 1% too high results in a calculated hot temperature that is 3.7% too high. Row 4 shows the result if the cold-resistance reading is 1°C too high. The result is that the determined hot resistance is 1.25°C too high. In this case, while there is a reduction in the error expressed as percent, the absolute error in °C is in fact greater than the original temperature error in the cold-temperature reading. These examples show that all three measured quantities—R_h, R_c, and T_c—must be measured accurately to obtain an accurate determination of the average winding temperature.

TABLE 17.2 Effect of Measurement Error in Average Winding Temperature by Resistance

Row	$T_h + e_{Th}$ (°C)	$R_h + e_{Rh}$ (Ω)	$R_c + e_{Rc}$ (Ω)	$T_c + e_{Th}$ (°C)
1	87.375 + 0	0.030 + 0	0.024 + 0	23.0 + 0
2	87.375 − 3.187 = 84.188 (−3.6%)	0.030 + 0	0.024 + 0.00024 = 0.02424 (+1.0%)	23.0 + 0
3	87.375 + 3.218 = 90.594 (+3.7%)	0.030 + 0.0003 = 0.0303 (+1.0%)	0.024 + 0	23.0 + 0
4	87.375 + 1.25 = 88.625 (+1.43%)	0.030 + 0	0.024 + 0	23.0 + 1.0 = 24.0 (4.35%)

www.EngineeringEbooksPdf.com

Other methods for correction to the instant of shutdown based on W/kg, or W/kg and time, are given in the IEEE test code [2]. The cooling-curve method, however, is preferred.

17.7 Other Tests

17.7.1 Short-Circuit-Withstand Tests

17.7.1.1 Purpose of Short-Circuit Tests

Short-circuit currents during through-fault events expose the transformer to mechanical stresses caused by magnetic forces, with typical magnitudes expressed in thousands of kilograms. Heating of the conductors and adjacent insulation due to I^2R losses also occurs during a short-circuit fault. The maximum mechanical stress is primarily determined by the square of the peak instantaneous value of current. Hence, the short-circuit magnitude and degree of transient offset are specified in the test requirements. Fault duration and frequency of occurrence also affect mechanical performance. Therefore, the number of faults, sometimes called "shots," during a test and the duration of each fault are specified. Conductor and insulation heating is for the most part determined by the rms value of the fault current and the fault duration.

Short-circuit-withstand tests are intended primarily to demonstrate the mechanical-withstand capability of the transformer. Thermal capability is demonstrated by calculation using formulas provided by IEEE C57.12.00 [1].

17.7.1.2 Transformer Short-Circuit Categories

The test requirements and the pass-fail evaluation criteria for short-circuit tests depend upon transformer size and construction. For this purpose, transformers are separated into four categories as shown in Table 17.3. The IEEE standards [1] and [2] refer to these categories while discussing the test requirements and test results evaluation.

17.7.1.3 Configurations

A short circuit is applied using low-impedance connections across either the primary or the secondary terminals. A secondary fault is preferred, since it more directly represents the system conditions. The fault can be initiated in one of two ways:

1. Starting with an open circuit at the terminal to be faulted, energize the transformer and then apply the short circuit by closing a breaker across the terminal.
2. Starting with a short circuit across the terminal to be faulted, close a breaker at the source terminal to energize the prefaulted transformer.

The first fault-initiation method is the preferred method. Given in the order of preference as listed in C57.12.90 [2], the following fault types are permissible:

- Three-phase source, three-phase short circuit.
- Single-phase source, single phase-to-ground short circuit.
- Single-phase source, simulated three-phase short circuit.
- Single-phase source, single-phase short circuit, applied one phase at a time.

TABLE 17.3 Transformer Short-Circuit Test Categories

Category	Single-Phase, kVA	Three-Phase, kVA
I	5–500	15–500
II	501–1,667	501–5,000
III	1,668–10,000	5,001–30,000
IV	Above 10,000	Above 30,000

www.EngineeringEbooksPdf.com

The simulated three-phase short circuit, using single-phase source, is conducted as follows, depending on whether the connection is delta or wye. For wye-connected windings, the fault or source is applied between one terminal and the other two terminals connected together. For delta-connected windings, the fault or source is connected between two line terminals, with no connection to the other terminal, which must be repeated for each of the three phases.

17.7.1.4 Short-Circuit Current Duration, Asymmetry, and Number of Tests

The required short-circuit current magnitude and degree of asymmetry of the first cycle of current is given in IEEE C57.1200 [1]. Each phase of the transformer is subjected to a total of six tests that satisfy the symmetrical current requirements. At least two of the six must also satisfy the asymmetrical current tests. Five of the six tests must have a fault duration of 0.25 s. One of the tests, which is sometimes called the "long duration test," must be of longer duration for Category I, II, and III transformers. The longer duration must be determined as follows:

For Category I transformers,

$$t = 1250/I^2$$

where
t = duration, seconds
I = fault current, per unit of load current

For Category II transformers,
$t = 1.0$ s

For Category III transformers,
$t = 0.5$ s

Clause 7 of IEEE C57.12.00-1993 [1] and Clause 12 of IEEE C57.12.90-1993 [2] provide a detailed and excellent description of the requirements and procedures for short-circuit testing.

17.7.1.5 Evaluation of Short-Circuit Test Results

Clause 12.5 of IEEE C57.12.90-1993 [2], Proof of Satisfactory Performance, spells out the requirements for passing or failing the tests. These include:

- Visual inspection
- Dielectric tests following short-circuit tests
- Observations of terminal voltage and current waveforms—no abrupt changes
- Changes in leakage impedance are limited to values specified in the standards
- Low-voltage impulse tests may be performed
- Increases in excitation current are limited by the standards

Clause 12.5 of the test code discusses these criteria in detail.

17.7.2 Special Tests

Many additional tests are available to obtain certain information about the transformer, usually to address a specific application issue. These are listed below.

- Overload heat run
- Gas-in-oil sampling and analysis (in conjunction with other tests)
- Extended-duration no-load-loss tests
- Zero-sequence impedance measurements
- Tests of the load tap changer

www.EngineeringEbooksPdf.com

- Short-circuit-withstand tests
- Fault-current capability of enclosures (overhead distribution transformers)
- Telephone line voice frequency electrical noise (overhead distribution transformers)
- Tests on controls

These tests and others, of a specific nature, are beyond the scope of this general article. Interested readers will find more information about these and other tests in the national and international standards dealing with transformers.

References

1. IEEE, *Standard General Requirements for Liquid-Immersed Distribution, Power, and Regulating Transformers*, IEEE Std. C57.12.00-1993, Institute of Electrical and Electronics Engineers, Piscataway, NJ, 1993.
2. IEEE, *Standard Test Code for Liquid-Immersed Distribution, Power, and Regulating Transformers; and Guide for Short-Circuit Testing of Distribution and Power Transformers* (ANSI), IEEE/ANSI Std. C57.12.90-1992, Institute of Electrical and Electronics Engineers, Piscataway, NJ, 1992.
3. IEEE, *The New IEEE Standard Dictionary of Electrical and Electronics Terms*, Std. 100-1992, Institute of Electrical and Electronics Engineers, Piscataway, NJ, 1992.
4. IEEE, *Guide for Transformer Impulse Tests*, IEEE Std. C57.98-1993, Institute of Electrical and Electronics Engineers, Piscataway, NJ, 1993.
5. IEEE, *Guide for Partial Discharge Measurement in Liquid-Filled Power Transformers and Shunt Reactors*, IEEE Std. C57.113-1991, Institute of Electrical and Electronics Engineers, Piscataway, NJ, 1991.

www.EngineeringEbooksPdf.com

18

Load-Tap-Change Control and Transformer Paralleling

18.1 Introduction **18**-1
18.2 System Perspective, Single Transformer **18**-2
18.3 Control Inputs **18**-2
Voltage Input • Current Input • Phasing of Voltage and Current Inputs
18.4 Need for Voltage Regulation **18**-3
Regulation of Voltage at Bus • Regulation of Voltage at Load
18.5 LTC Control with Power-Factor-Correction Capacitors **18**-7
18.6 Extended Control of LTC Transformers and Step-Voltage Regulators **18**-8
Voltage Limit Control • Voltage Reduction Control • Reverse Power Flow
18.7 Introduction to Control for Parallel Operation of LTC Transformers and Step-Voltage Regulators **18**-10
Matter of Circulating Current • Need for Special Control Considerations • Special Concern for Step-Voltage Regulator Applications • Less Common Paralleling Application: Two Transformers, Split HV Bus
18.8 Defined Paralleling Procedures **18**-14
Total Current Responding (Traditional) Circulating Current • Reactive Current Responding Circulating Current • Power Factor Responding • Master–Follower Method • Negative Reactance Method
18.9 Paralleling Methods Comparison **18**-17
Mismatched Transformer Impedances • Load Current to Primary Load • General Paralleling Methods: Conclusions
References **18**-22
Bibliography **18**-22

James H. Harlow
Harlow Engineering Associates

18.1 Introduction

Tap changing under load (TCUL), be it with load-tap-changing (LTC) power transformers or step-voltage regulators, is the primary means of dynamically regulating the voltage on utility power systems. Switched shunt capacitors can also be used for this purpose, but in the context of this discussion, shunt capacitors are presumed to be applied with the objective of improving the system power factor (PF).

The control of a tap changer is much more involved than simply responding to a voltage excursion at the transformer secondary. Modern digital versions of LTC control include so many ancillary functions

www.EngineeringEbooksPdf.com

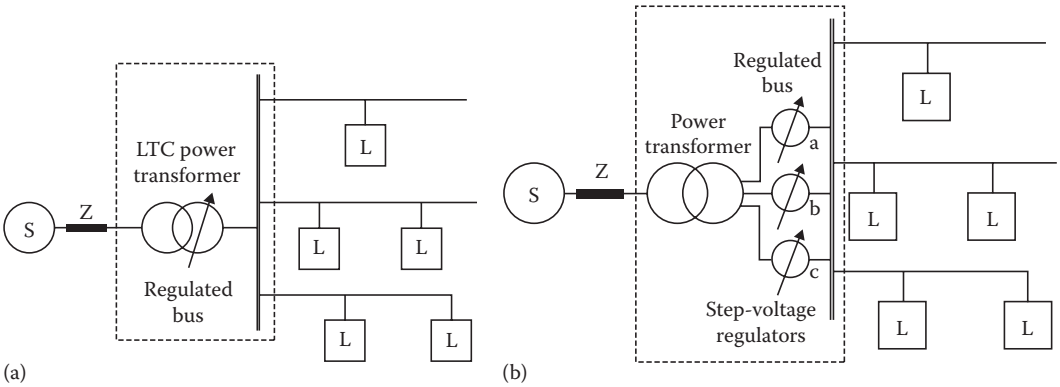

FIGURE 18.1 (a) Three-phase bus regulation with three-phase LTC transformer. (b) Independent-phase bus regulation with three single-phase step-voltage regulators.

and calculated parameters that it is often used with its communications capability to serve as the means for system-condition monitoring.

The control of the tap changer in a transformer or step-voltage regulator is essentially the same. Unless stated otherwise, the use of the term "transformer" in this chapter applies equally to step-voltage regulators. It should be recognized that either type of product can be constructed as single-phase or three-phase apparatus, but that transformers are more often three phase, while step-voltage regulators are more commonly single phase.

18.2 System Perspective, Single Transformer

This discussion is patterned to a typical utility distribution system, the substation and the feeder, although much of the material is also applicable to transmission applications. This first discussion of the control considers that the control operates only one LTC in isolation, that is, there is not the opportunity for routine operation of transformers in parallel.

The system can be configured in any of several ways according to the preference of the user. Figure 18.1 depicts two common implementations. In the illustrations of Figure 18.1, the dashed-line box depicts a substation enclosing a transformer or step-voltage regulators. The implementations illustrated accomplish bus-voltage regulation on a three-phase (Figure 18.1a) or single-phase (Figure 18.1b) basis. Another common application is to use voltage regulators on the distribution feeders. A principal argument for the use of single-phase regulators is that the voltages of the three phases are controlled independently, whereas a three-phase transformer or regulator controls the voltage of all phases based on knowledge of the voltage of only one phase. For Figure 18.1,

S is the source, the utility network at transmission or subtransmission voltage, usually 69 kV or greater
Z is the impedance of the source as "seen" looking back from the substation
L are loads, distributed on the feeders, most often at 15–34.5 kV

The dominance of LTC apparatus involves either 33 voltage steps of 5/8% voltage change per step, or 17 voltage steps of 1¼% voltage change per step. In either case, the range of voltage regulation is ±10%.

18.3 Control Inputs

18.3.1 Voltage Input

The voltage of the primary system is unimportant to the LTC control. The system will always include a voltage transformer (VT) or other means to drop the system voltage to a nominal 120 V for use by the control. Because of this, the control is calibrated in terms of 120 V, and it is common to speak of the

www.EngineeringEbooksPdf.com

voltage being, say, 118 V, or 124 V, it being understood that the true system voltage is the value stated times the VT ratio. Presuming a single tap step change represents 5/8% voltage, it is easily seen that a single tap step change will result in 0.00625 per unit (p.u.) × 120 V = 0.75 V change at the control.

The control receives only a single 120 V signal from the VT, tracking the line-ground voltage of one phase or a line–line voltage of two phases. For the case of three-phase apparatus, the user must take great care, as later described, in selecting the phase(s) for connecting the VT.

18.3.2 Current Input

The current transformers (CT) are provided by the transformer manufacturer to deliver control current of "not less than 0.15 A and not more than 0.20 A…when the transformer is operating at the maximum continuous current for which it is designed." (This is per IEEE Std. C57.12.10, where the nominal current is 0.2 A. Other systems may be based on a different nominal current, such as 5.0 A.) As with the voltage, the control receives only one current signal, but it can be that of one phase or the cross connection (the paralleling of two CTs) of two phases.

18.3.3 Phasing of Voltage and Current Inputs

In order for the control to perform all of its functions properly, it is essential that the voltage and current input signals be in-phase for a unity PF load or, if not, that appropriate recognition and corrective action be made for the expected phasing error.

Figure 18.2 depicts the three possible CT and VT orientations for three-phase apparatus. Note that for each of the schemes, the instrument transformers could be consistently shifted to different phases from that illustrated without changing the objective. The first scheme, involving only a line-to-ground-rated VT and a single CT, is clearly the simplest and least expensive and is that dictated for a wye-connected secondary winding by IEEE Std. C57.12.10. However, it causes all control action to be taken solely on the basis of knowledge of conditions of one phase. Some may prefer the second scheme, as it gives reference to all three phases, one for voltage and the two not used for voltage to current. The third scheme is often found with a delta-connected transformer secondary. Note that the current signal derived in this case is $\sqrt{3}$ times the magnitude of the individual CT secondary currents. This must be scaled before the signal is delivered to the control.

The user must assure the proper placement of the VT(s) to be consistent with the CT(s) provided inside the transformer. This is not a concern with step-voltage regulators, where all instrument transformers are provided (per IEEE Std. C57.15) internal to the product.

18.4 Need for Voltage Regulation

Referring to the circuits of Figure 18.1, note that system conditions will change over time, with the result that the voltage at the substation bus, and as delivered to the load, will change. From Figure 18.1, the source voltage, the source impedance, and the load conditions will be expected to change with time. The most notable of these, the load, must be recognized to consist of two factors—the magnitude and the PF, or what is the same point, the real (watt) and reactive (var) components.

18.4.1 Regulation of Voltage at Bus

Many times, the object of the LTC is simply to hold the substation bus voltage at the desired level. If this is the sole objective, it is sufficient to bring only a VT signal that is representative of the bus voltage into the control. The secondary of the VT is usually 120 V at the nominal bus voltage, but other VT secondary voltages, especially 125, 115, and 110 V, are used. Figure 18.3 shows the circuit. The figure shows a motor (M) on the LTC, which is driven in either the raise or lower direction by the appropriate output

www.EngineeringEbooksPdf.com

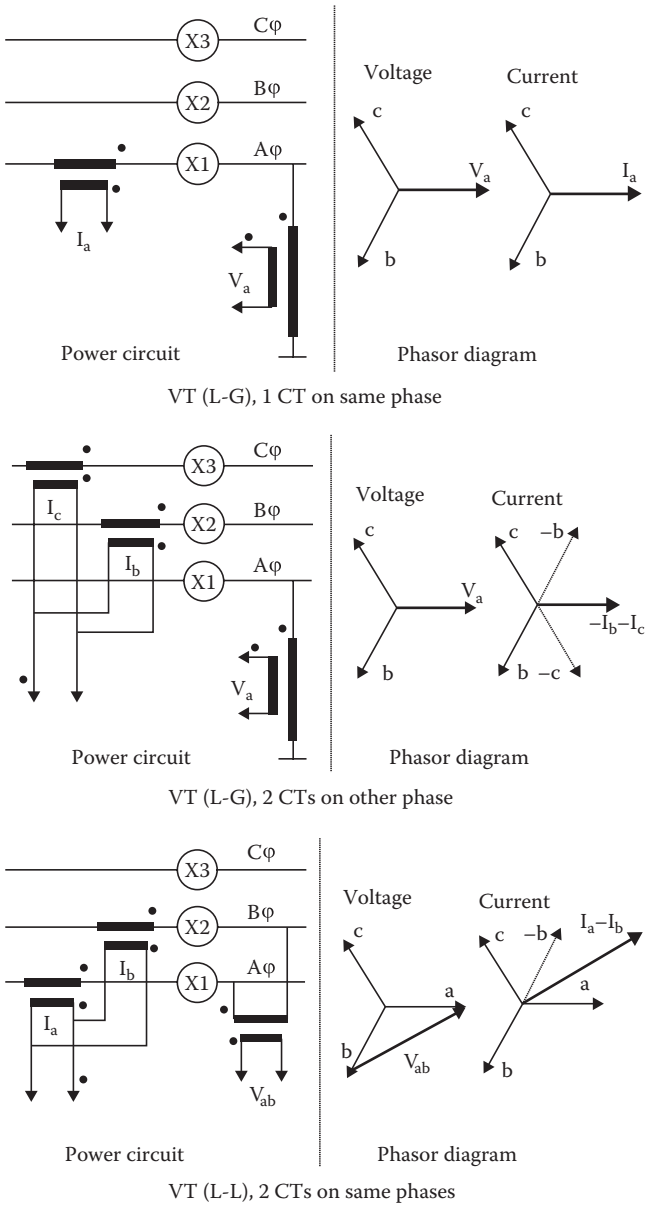

FIGURE 18.2 Phasing of voltage and current inputs.

(M_R or M_L) of the control. This first control, Figure 18.3, is provided with only three settings, these being those required for the objective of regulating the substation secondary-bus voltage.

18.4.1.1 Voltage Set Point

The voltage set point on the control voltage base, for example, 120 V, is the voltage desired to be held *at the load*. (The load location for this first case is the substation secondary bus because line-drop compensation is not yet considered and is therefore zero.) This characteristic is also commonly referred to as "voltage band center," this being indicative of the point that there is a band of acceptable voltage and that this is the midpoint of that band. If line-drop compensation (LDC, as detailed

www.EngineeringEbooksPdf.com

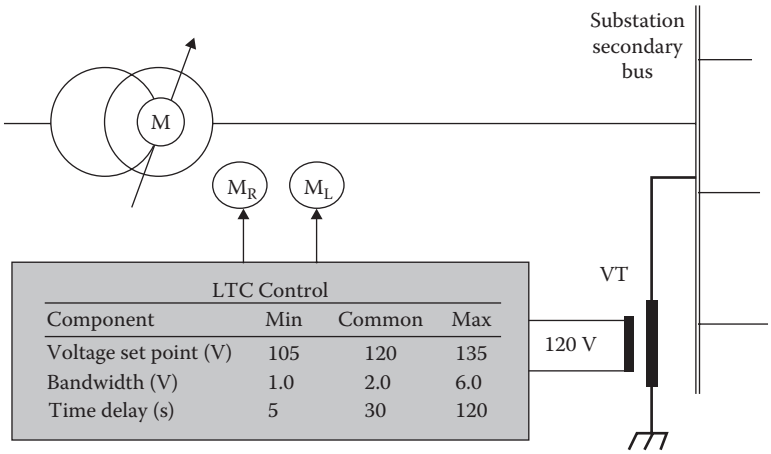

FIGURE 18.3 Control for voltage regulation of the bus.

later) is not used, the set point will often be somewhat higher than 120 V, perhaps 123–125 V; with the use of LDC, the setting will be lower, perhaps 118 V.

18.4.1.2 Bandwidth

The bandwidth describes the voltage range, or band, that is considered acceptable, that is, in which there is not a need for any LTC corrective action. The bandwidth is defined in IEEE Std. C57.15 as a voltage with one-half of the value above and one-half below the voltage set point. Some other controls adjust the bandwidth as a percentage of the voltage set point, and the value represents the band on each side of the band center. The bandwidth voltage selected is basically determined by the LTC voltage change per step. Consider a transformer where the voltage change per step is nominally 0.75 V (5/8% of 120 V). Often, this is only the average; the actual voltage change per step can differ appreciably at different steps in the same transformer. Clearly, the bandwidth must be somewhat greater than the maximum step-change voltage, because if the bandwidth were less than the voltage change per step, the voltage could pass fully across the band with a single step, causing a severe hunting condition. The minimum suggested bandwidth setting is twice the nominal step-change voltage, plus 0.5 V, for a 2.0 V minimum setting for the most common 5/8% systems. Many users choose somewhat higher bandwidths when the voltage regulation is not critical and there is a desire to reduce the number of daily tap changes.

18.4.1.3 Time Delay

All LTC controls incorporate an intentional time delay from the time the voltage is "out of band," until a command is given for tap-changer action. Were it not for the control delay, the LTC would respond to short-lived system voltage sags and swells, causing many unwanted and unnecessary tap changes. Most applications use a linear time-delay characteristic, usually set in the range of 30–60 s, although controls with inverse time-delay characteristics are also available, where the delay is related inversely to the voltage digression from the set point.

18.4.2 Regulation of Voltage at Load

It is recognized that if it were easy to do so, the preferred objective would be to regulate the voltage at the load rather than at the substation bus. The difficulty is that the voltage at the load is not commonly measured and communicated to the control; therefore, it must be calculated in the control using system parameters calculated by the user. Basically, the calculation involves determining the line impedance ($R + jX_L$) between the substation and the load, the location of which is itself usually nebulous.

www.EngineeringEbooksPdf.com

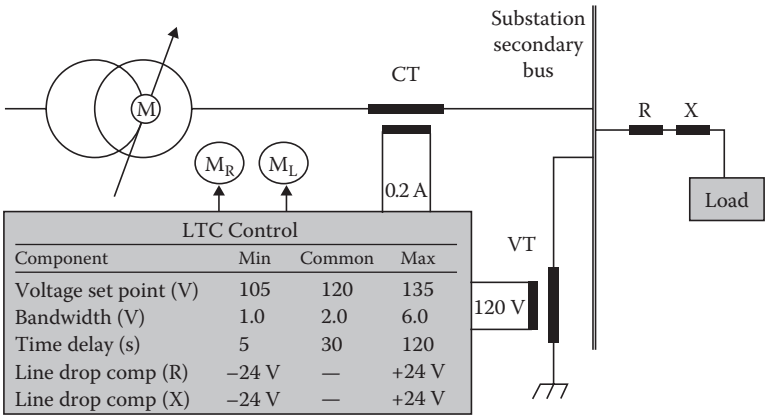

LTC Control

Component	Min	Common	Max
Voltage set point (V)	105	120	135
Bandwidth (V)	1.0	2.0	6.0
Time delay (s)	5	30	120
Line drop comp (R)	−24 V	—	+24 V
Line drop comp (X)	−24 V	—	+24 V

FIGURE 18.4 Control for voltage regulation at the load.

The procedure used is that of LDC, that is, the boosting of the voltage at the substation to compensate for the voltage drop on the line. The validity of the method is subject to much debate because of (1) the uncertainty of where to consider the load to be when it is in fact distributed and (2) the inaccuracies encountered in determining the feeder line resistance and reactance.

The principle upon which LDC is based is that there is one concentrated load located a sufficient distance from the LTC transformer for the voltage drop in the line to be meaningful. Consider Figure 18.4, which is similar to Figure 18.3 with the addition of a load located remote from the substation and a current signal input to the control. The distance from the substation to the load must be defined in terms of the electrical distance, the resistance (R), and inductive reactance (X) of the feeder. The means of determining the line R and X values is available from numerous sources (Beckwith Electric Co., "Basic"; Harlow Engineering Associates, 2011).

The LDC resistance and reactance settings are expressed as a value of volts on the 120 V base. These voltage values are the voltage drop on the line (R = in-phase component; X = quadrature component) when the line-current magnitude is the CT primary rated current.

The manner in which the control accounts for the line-voltage drop is illustrated with phasor diagrams. Figure 18.5 consists of three illustrations showing the applicable phasor diagram as it changes by virtue of the load magnitude and PF. In the illustrations, the voltage desired at the load, V_{Load}, is the reference phasor; its magnitude does not change. All of the other phasors change when the load current changes in magnitude or phase angle. For all of the diagrams,

IR is the voltage drop on the line due to line resistance; in-phase with the current
IX is the voltage drop on the line due to line inductive reactance; leads the current by 90°
IZ is the total line-voltage drop, the phasor sum of IR and IX

In the first illustration (Figure 18.5a), the PF angle, ϕ, is about 45°, lagging, for an illustration of an exaggerated low PF of about 0.7. It is seen that the voltage at the bus needs to be boosted to the value V_{Bus} to overcome the IR and IX voltage drops on the line. The second illustration (Figure 18.5b) shows simply that if the line current doubles with no change of phase angle, the IR and IX phasors also double, and a commensurately greater boost of V_{Bus} is required to hold the V_{Load} constant. The third illustration (Figure 18.5c) considers that the line-current magnitude is the same as the first case, but the angle is now leading. The IZ phasor simply pivots counterclockwise to reflect the new phase angle. It is interesting to note that in this case, the V_{Load} magnitude exceeds V_{Bus}. This is modeling the real system. Too much shunt capacitance on the feeder (excessive leading PF) results in a voltage rise along the feeder. The message for the user is that LDC accurately models the line drop, both in magnitude and phase.

No "typical" set-point values for LDC can be given, unless it is zero, as the values are so specific to the application. Perhaps due to the difficulty in calculating reasonable values, LDC is not used in

www.EngineeringEbooksPdf.com

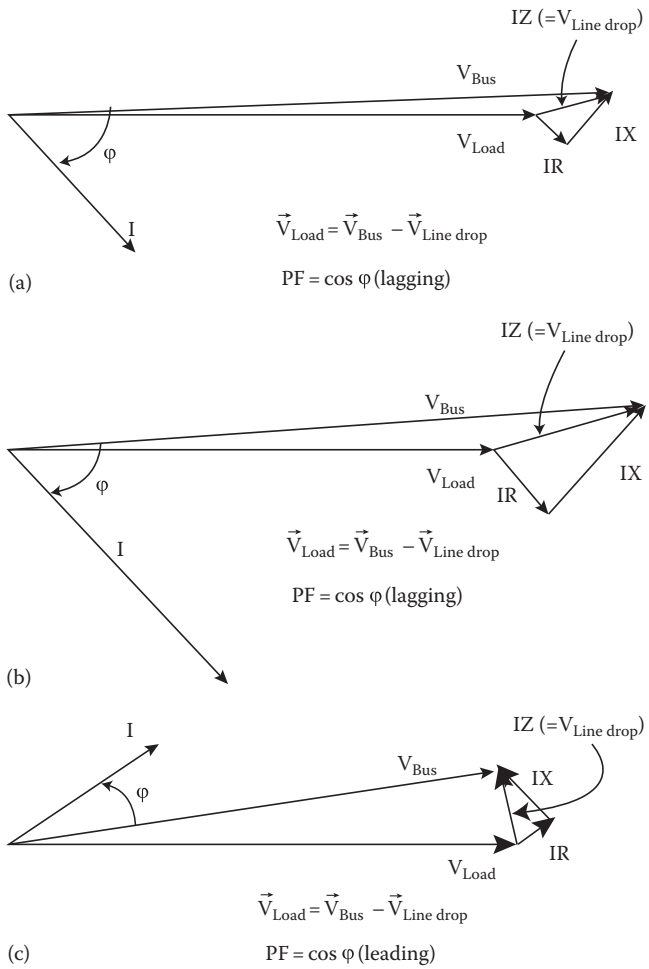

FIGURE 18.5 (a) Load phasor diagram, normal load, lagging PF. (b) Load phasor diagram, heavy load, lagging PF. (c) Load phasor diagram, normal load, leading PF.

many applications. An alternative to LDC, Z-compensation, is sometimes preferred for its simplicity and essential duplication of LDC. To use Z-comp, the control is programmed to simply raise the output voltage, as a linear function of the load current, to some maximum voltage boost. This method is not concerned with the location of the load, but it also does not compensate for changes in the PF of the load.

18.5 LTC Control with Power-Factor-Correction Capacitors

Many utility distribution systems include shunt capacitors to improve the load PF as seen from the substation and to reduce the overall losses by minimizing the need for volt-amperes reactive (vars) from the utility source. This practice is often implemented both with capacitors that are fixed and others that are switched in response to some user-selected criterion. Further, the capacitors can be located at the substation, at the load, or at any intermediate point.

The capacitors located at the load and source are illustrated in Figure 18.6. The position of the capacitors is important to the LTC control when LDC is used.

With the capacitors located at the load, it is presumed that the var requirement of the load is matched exactly by the capacitor, Figure 18.6a, and that the transformer CT current is exactly the current of the line.

www.EngineeringEbooksPdf.com

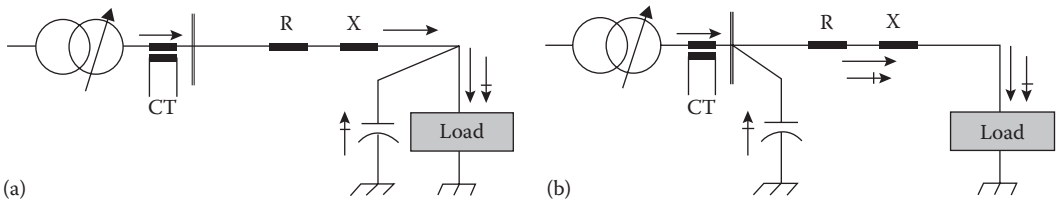

FIGURE 18.6 (a) Feeder with power-factor-correction capacitors, capacitors at the load. (b) Feeder with power-factor-correction capacitors, capacitors at the source bus.

Here, LDC is correctly calculated in the control because the control LDC circuit accurately represents the current causing the line voltage drop.

In the second illustration, Figure 18.6b, the capacitor supplying the var requirement of the load is located at the substation bus. There is an additional voltage drop in the line due to the reactive current in the line. This reactive current is not measured by the LDC CT. In this case, the line drop voltage is not correctly calculated by the control. To be accurate for this case, it is necessary to determine the voltage drop on the feeder due to the capacitor-produced portion of the load current and then add that voltage to the control set-point voltage to account for the drop not recognized by the LDC circuit.

The matter is further confused when the capacitor bank is switched. With the capacitor bank in the substation, it is possible to devise a control change based on the presence of the bank. No realistic procedure is recognized for the case where the bank is not in close physical proximity to the control, keeping in mind that the need is lessened to zero as the capacitor location approaches the load location.

18.6 Extended Control of LTC Transformers and Step-Voltage Regulators

An LTC control often includes much more functionality than is afforded by the five basic set points. Much of the additional functionality can be provided for analog controls with supplemental hardware packages, or it is provided as standard equipment with the newer digital controls. Some functionality, most notably serial communications, is available only with digital controls.

18.6.1 Voltage Limit Control

Perhaps the most requested supplemental LTC control function is voltage limit control, also commonly referred to as "first house (or first customer) protection." This feature can be important with the use of LDC where excessive line current could result in the voltage at the substation bus becoming excessive. System realities are such that the voltage at the "first house," or the load immediately outside the substation, is also exposed to this HV condition.

Review again Figure 18.4, where LDC is used and it is desired to hold 118 V at the load. The voltage at the source (the secondary substation bus) is boosted as the load increases in order to hold the load at 118 V. If the load continues to grow, the voltage at the source rises accordingly. At some point, the load could increase to the point where the first customer is receiving power at excessive voltage. Recognize that the control and the LTC are performing properly; the bus voltage is too high because of the unanticipated excessive load on the system.

The voltage limit control functions only in response to the actual local bus voltage, opening the "raise" circuit to the drive motor at a user-selected voltage, thereby defeating the basic control "raise" signal when the bus voltage becomes excessive. In this way, the LTC action will not be responsible for first-customer overvoltage.

www.EngineeringEbooksPdf.com

These controls provide a degree of protection for the case where the bus voltage further exceeds the selected voltage set-point cutoff voltage, as might occur with a sudden loss of load or other system condition unrelated to the LTC. If the voltage exceeds a second value, usually about 2 V higher than the selected voltage set-point cutoff voltage, the voltage limit control will, of itself, command a "lower" function to the LTC.

Most of these controls provide a third capability that of undervoltage LTC blocking so that the LTC will not run the "lower" function if the voltage is already below a set-point value. This function mirrors the "raise" block function described earlier.

The voltage-limit-control functionality described is built into all of the digital controls. This is good in that it is conveniently available to the user, but caution needs to be made regarding its expected benefit. The function cannot be called a backup control unless it is provided as a physically separate control. Consider that the bus voltage is rising, not correctly because of LDC action, but because of a failure of the LTC control. The failure mode of the control may cause the LTC to run high and the bus voltage to rise accordingly. This high voltage will not be stopped if the voltage-limit-control function used is that which is integral to the defective digital control. Only a supplemental device will stop this and thereby qualify as a backup control.

18.6.2 Voltage Reduction Control

Numerous studies have reported that, for the short term, a load reduction essentially of equal percentage to a voltage reduction can be a useful tool to reduce load and conserve generation during critical periods of supply shortage. It is very logical that this can be implemented using the LTC control. Many utilities prepare for this with the voltage-reduction capability of the control, now popularly called "conservation voltage reduction" (Fagan and Amondson, 2010).

With analog controls, voltage reduction was usually implemented using a "fooler" transformer at the sensing-voltage input of the control. This transformer could be switched into the circuit using SCADA (supervisory control and data acquisition) to boost the voltage at the control input by a given percentage, or often up to three different percentages, using different taps on the fooler transformer. Having the sensed voltage boosted by, say, 5% without changing the voltage set point of the control will cause the control to run the tap position down by 5% voltage, thus accomplishing the desired voltage reduction. The percentage of three reduction steps, most commonly 2.5%, 5.0%, and 7.5%, is preestablished by the design of the fooler transformer.

Digital controls do the same function much more conveniently, more accurately, and more quickly. The voltage reduction applicable to steps 1, 2, and 3 is individually programmed and, upon implementation, effectively lower the voltage set point. Control based on the new set point is implemented without intentional time delay, reverting to panel time delay after the voltage reduction has been implemented. Most often, controls provide for three steps of voltage reduction, each step individually programmed up to 10.0%.

18.6.3 Reverse Power Flow

Voltage regulators as used on distribution feeders are sometimes subjected to reverse power flow due to system switching. A common practice is to install the distribution system per the illustration of Figure 18.7. Normally, step-voltage regulators A and B both usually "see" forward power flow, as in Figure 18.7a. Line switching, such as might be necessary due to service required in Substation B, causes Feeder B to be served from Substation A and the Regulator B to operate in reverse power flow mode, as in Figure 18.7b. Were special precautions not taken, Regulator B would operate incorrectly, inevitably running to a "raise" or "lower" tap limit. This would have occurred because the regulator would continue to attempt to operate based on knowledge of the voltage at its load terminal, but now, that terminal is, in fact, the source.

www.EngineeringEbooksPdf.com

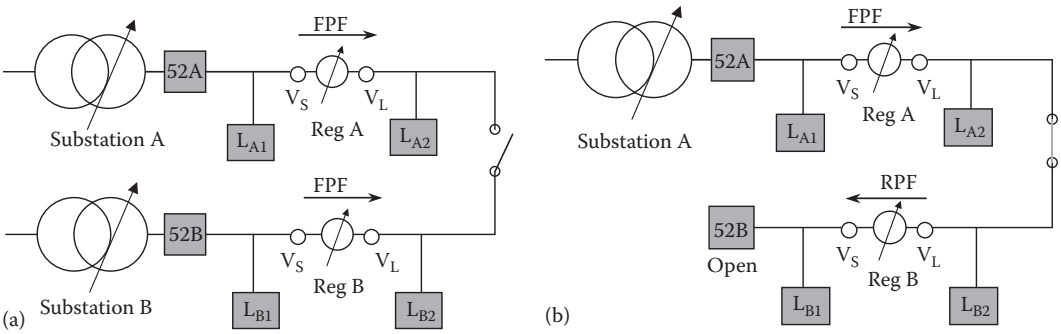

FIGURE 18.7 (a) Step-voltage regulator in routine application. (b) Step-voltage regulator in reverse power-flow application.

Tap-changer operation does nothing to correct that voltage, but it severely disturbs the voltage to loads L_{B1} between Regulator B and Substation B.

The remedy is to operate Regulator B based on the voltage at its usual source (now the load) terminal. Analog controls have been provided to automatically switch between the load and source terminals upon recognition of reverse power flow, but the expense of doing so, involving in most cases the addition of a new VT, seldom justified the avoidance of simply manually switching off automatic operation during the planned power-reversal event. Digital controls accomplish this feature automatically with no additional hardware. These controls calculate the voltage at the normal source terminal using knowledge of the measured load terminal voltage, the recognized tap position plus, in some cases, an approximation of the internal regulation of the regulator. Accomplishing voltage regulation with Regulator B during reverse power-flow operation in this manner adds only about 0.5% to the error of the control vis-à-vis having a supplemental VT for the application.

The apparatus and procedures defined previously for step-voltage regulators are not correct for most transformer applications where reverse power flow can occur. The basic difference is that the feeder-regulator application remains a radial system after the line switching is complete. Reverse power in transformers is more likely to occur on a system where the reverse power is due to a remote generator that is operating continuously in parallel with the utility. The proper operation of the LTC in this case must be evaluated for the individual system; it may differ, for example, if the remote source generator is a synchronous or induction machine. Perhaps the preferred operation would be to control the LTC so as to minimize or regulate to some value the var exchange between the systems. Some systems are simply operated with the LTC control turned off of automatic operation during reverse power flow so that the LTC says fixed on position until forward power flow resumes.

18.7 Introduction to Control for Parallel Operation of LTC Transformers and Step-Voltage Regulators

For a variety of reasons, it may be desirable to operate LTC transformers or regulators in parallel with each other. This may be done simply to add additional load-handling capability to an existing overloaded transformer, or it may be by initial substation design to afford additional system reliability, anticipating the need for removal of one transformer for maintenance or that there may be a failure of one transformer.

The usual paralleling application involves two preferably "identical" transformers which are solidly bussed together on the primary and secondary (when all circuit breakers are closed) such as illustrated in Figure 18.8. Clearly, if the transformers are matching, especially for this point of discussion that they exhibit the same impedance, there will be an equal division of load current in them when the tap changers are operating on the same tap position.

www.EngineeringEbooksPdf.com

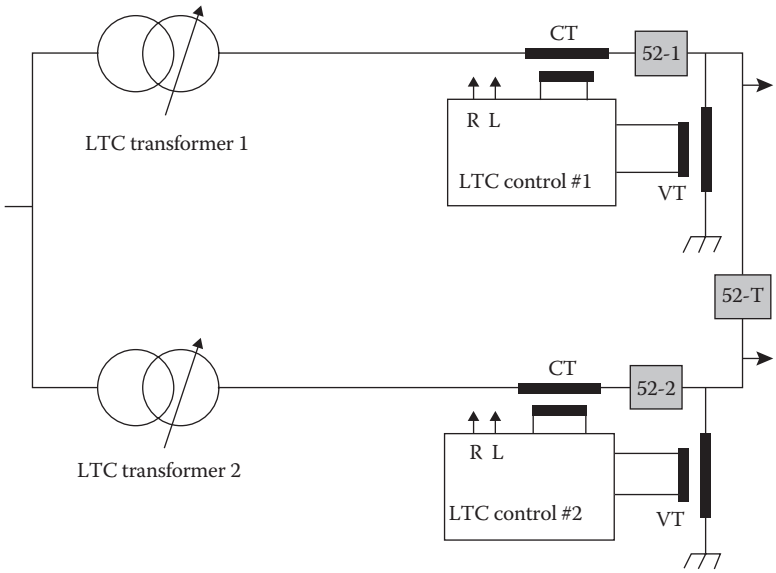

FIGURE 18.8 LTC transformers in parallel with no interconnections.

18.7.1 Matter of Circulating Current

For the substation of Figure 18.8, if the transformers are alike, it is axiomatic that preferred operation is to keep both tap changers on the same tap position as much as possible as to have the LTCs on disparate tap steps will produce a current which circulates in the substation and produces no useful work, but only contributes to an additional power loss in the substation.

To put this in context, consider that the transformers of Figure 18.8 are each rated at 20 MVA with the low voltage (LV) rated at 13.2 kV. The impedances are matched at 8.5%. Then the ohmic impedance, expressed on the LV base, of each transformer is

$$Z_{\text{transformer}} = \frac{0.085 \times (13.2)^2}{20} = 0.74\ \Omega \tag{18.1}$$

And recognizing that the impedance of a large power transformer is >99% reactive, it is reasonable to neglect the resistive component and simply denote this impedance as j0.74 ohms. If the voltage change per tap step is the common 5/8%, the actual voltage change is

$$V_{\text{change per tap}} = \frac{0.00625 \times 13{,}200}{\sqrt{3}} = 47.6\,\text{V} \tag{18.2}$$

Then, when one tap changer differs by one-step from the other, the current which circulates in the substation, recognizing that the impedance consists of the two transformers in series, is

$$I_{\text{circ}} = \frac{47.6}{(2 \times j0.74)} = -j32.2\,\text{A} \tag{18.3}$$

This current is detrimental in that it results in addition system power loss. Many tap change control schemes anticipate that the transformer's LTCs will unavoidably be operating one step apart much of the time; it is usually desirable to implement the control such that they will not further digress in tap position as each additional step of difference is an additional 32.2 A of circulating current.

www.EngineeringEbooksPdf.com

Consider again Figure 18.8 but that now the transformers have differing impedances—Transformer 2 is now 9.0% impedance or 5.9% higher than the 8.5% of Transformer 1. Since the total load will divide inversely as the parallel transformers paths impedances, Transformer 1 will assume 5.9% more current than Transformer 2. In this example, Transformer 1 takes 51.4%; Transformer 2 takes 48.6% of the total load, and this is essentially irrespective of the transformer LTC tap positions.

The concern for this unbalance of transformer loading as regards the paralleling control is that the implementation of the paralleling control may be designed to treat *any* difference in the transformer currents as being only due to circulating current as would be due to the tap position discrepancy previously described. Where this is the case, the controls would sense the 5.9% difference in transformer current, interpret it as circulating current, and attempt to correct for it with tap change action. Further confusing this matter is that this 5.9% difference current consists mostly of a real (little reactive component) current and the control may be designed to consider that it is wholly reactive.

Many references dismiss this concern with a comment that the transformers are preferred to be identical as to impedance, but such is not always realistic and that an impedance difference of the two transformers of some arbitrarily stated number, such as 7.5% maximum, should be imposed. Such references may also not delve into the matter of dynamic change of impedance. If the tap changers are located on the same side (HV or LV of both transformers) as will most often be the case, the impedances will be expected to change in concert with the rising or falling tap positions. But if the LTC is on the HV side of one transformer and on the LV side of the other, the percent impedance will change differently. In such case, the nameplates may show the same impedance (which is that for the neutral tap position), but the impedances may diverge dramatically, say 20%, when operating on a position extreme (IEEE Std. C57.12.10). This will easily exceed the rule-of-thumb 7.5% guideline. The use of a paralleling method forgiving of such impedance variations is then important.

Another possibility sometimes applied where the mismatch in impedances is considered to be too large is to apply a ratio correcting CT to the LDC circuit of one of the transformers (Beckwith #13, Advanced). This procedure accepts that the transformer loadings will differ due to the mismatch of impedances. The auxiliary special ratio CT is applied in one control circuit to fool the respective controls into belief of matched transformer loading when, in fact, they are not. This procedure facilitates the control but does nothing for the actual transformer loading mismatch; this with the usual sacrifice of some portion of the MVA capacity of one transformer.

18.7.2 Need for Special Control Considerations

To understand why special control consideration needs to be given to paralleling applications, consider again the two LTC transformers operating in parallel, that is, the primary and secondary of the transformers are bused together as in Figure 18.8. If the transformers are identical, they will evenly divide the load between them at all times while they are operating on the same tap position. Consider that the voltage at the secondary bus goes out of band. Even if the controls are set the same, they can never be truly identical, and, as example, one will command tap-change operation before the other. Later, when the voltage again changes so as to require a subsequent voltage correction, the same control that operated more quickly the first time would be expected to do so again. This can continue indefinitely with one tap changer doing all of the operations and consequential gross discrepancy of tap positions resulting in a very large circulating current. With one distinct exception to be explored later, the matter of equalizing the duty between the two tap changers is accommodated by implementing some means of communication between the controls.

18.7.3 Special Concern for Step-Voltage Regulator Applications

In the illustration earlier for LTC transformers, the circulating current is limited by the impedances of the transformers. It is *critically* important to recognize that to use the same circuit, simply

www.EngineeringEbooksPdf.com

replacing the transformers with regulators, cannot be done as the impedance of a regulator is very low at even the extreme tap positions, and it may be essentially zero at the neutral tap position. In this case, if both regulators are initially on neutral, and one moves to position 1R, *the current which circulates between them will be expected to be sufficiently large to cause catastrophic failure of the regulators*. The user is thereby cautioned: Step-voltage regulators can only be operated in parallel when there is adequate supplemental impedance included in the current loop. This is most often the impedance of the transformers that are in series with each regulator bank, or it could be a series current-limiting reactor.

18.7.4 Less Common Paralleling Application: Two Transformers, Split HV Bus

Sometimes Figure 18.8 does not suffice for the application. Consider that the primary bus may be served from two independent sources. The primary bus, while normally closed with a circuit breaker, *can* be split on occasion. Note that, then as depicted in Figure 18.9 when the HV bus tie breaker 52-T is open, the voltage drop and phase shift in the transmission line results in the Transformer T2 primary voltage differing from that of Transformer T1. In an extreme case the primary load and transmission impedance may both be great enough to result in a power flow reversal in T2. The total currents in the transformers are distinctly not as due only to their tap position discrepancies.

This situation can result in the preferred operation resulting in unequal tap positions of the LTCs. This situation and others such as significant load being drawn from a transformer tertiary winding must be recognized when selecting the best paralleling procedure to be employed.

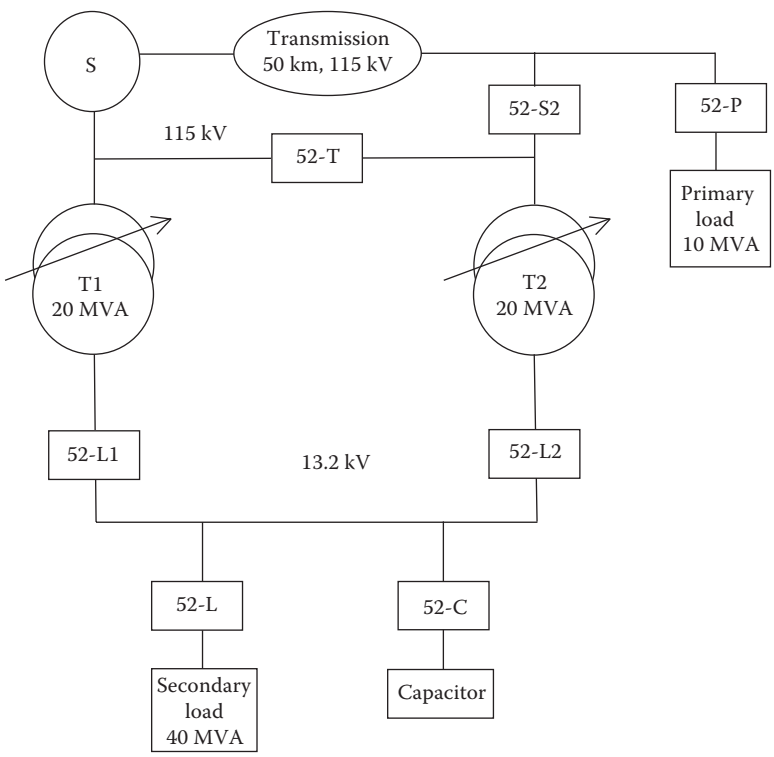

FIGURE 18.9 Power circuit for comparing transformer paralleling techniques.

www.EngineeringEbooksPdf.com

18.8 Defined Paralleling Procedures

Five paralleling methods with different means of implementation and attributes are identified and discussed.

18.8.1 Total Current Responding (Traditional) Circulating Current

"Traditional" is used in the title of this clause as the method to be described is that most commonly employed in the United States for the past 50 years. Its operation is predicated on the difference in current in the two transformers being due only to true circulating current which is itself due only to disparate tap positions of the two LTCs. Hardware is involved in addition to the controls per se in the form of paralleling balancers. Referring to Figure 18.10, current representative of transformer total load current is supplied to the individual balancer for each transformer. By plan for the method, this current will consist only of (1) the current due to the substation load and (2) the current due to that circulating in the substation due to the tap position difference. The function of the balancers is to separate these two components of current (Beckwith #11 Basic) and feed them independently to the controls. Recognizing that the portion of current which is the circulating current will be of opposite polarity in the two controls, this current is used to bias the control voltage set point such that a lagging circulating current biases for a Lower tap change command and leading circulating current biases for a Raise command. Then, when a need to correct the LV bus voltage occurs, the LTC in the transformer which will make that correction and coincidentally act to reduce circulating current will make the tap change.

This scheme requires knowledge of the state of all LV breakers. For example, if breaker 52-L2 were to open the full substation load would be supplied by T1. Line drop compensation as set on T1 would now see twice current and overreact driving the 13.2 kV bus voltage higher than planned; circuitry needs to be included to assure that does not occur.

The scheme uses single-phase VT and CT signals from each transformer—these must be in-phase with each other (at unity PF) or be appropriately phase shifted in the controls as having a 120° shift between them as would occur if derived from different phases would be incorrectly interpreted by the control as a mismatched current.

18.8.2 Reactive Current Responding Circulating Current

For the situation alluded earlier where the HV bus tie breaker 52-T of Figure 18.9 is open, the current now in the I_{circ} path of Figure 18.10 consists of a high PF current, whereas for the traditional circulating

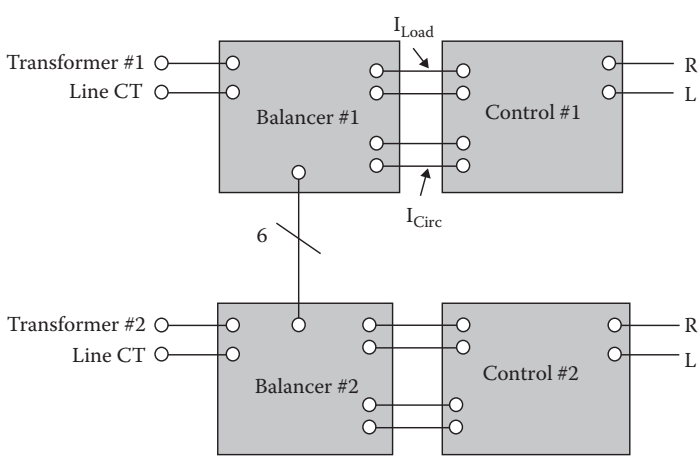

FIGURE 18.10 Control block diagram, paralleling by traditional circulating-current method.

www.EngineeringEbooksPdf.com

current method, a near-zero PF current is expected at this point and anticipated in the design. This method therefore removes the real portion of this circulating current leaving only the reactive portion to act upon. The common hardware implementation is much like Figure 18.10.

A feature of this reactive current responding method relative to the traditional method is that it is more forgiving of mismatched transformer impedances.

18.8.3 Power Factor Responding

A circulating current can be recognized by a measure of the apparent PF of the current in each transformer; a higher reactive load current will present as the more lagging PF, the lesser reactive load current as the more leading (or less lagging) PF. Perhaps less obvious is that the measure of PF is independent of current magnitude so that paralleling of two differently sized transformers is amenable to this procedure. So PF responding is another basis for implementing what is also effectively circulating current paralleling while avoiding the need for breakout or measure of that current. As in Figure 18.11, the scheme does not require the breakout of the circulating current but does still require the intercontrol communication. Figure 18.12 is representative phasor diagrams showing that the transformers, while taking a significantly different portion of the load, are unaffected by that fact—the control is concerned only with the relative phase angles, φ1 and φ2. When the control senses a need to lower the LV bus voltage, it will do so with a command to lower the tap on the transformer with the more

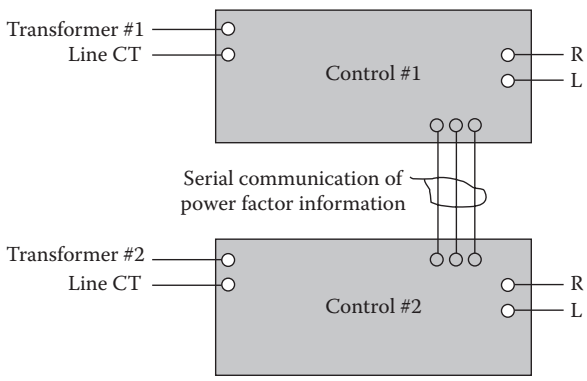

FIGURE 18.11 Control block diagram, paralleling by equal PF, circulating-current method.

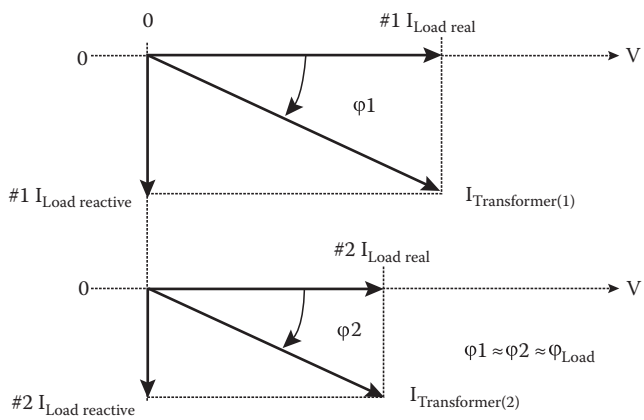

FIGURE 18.12 Phasor diagram—mismatched transformers in parallel by equal-power-factor method.

www.EngineeringEbooksPdf.com

lagging PF and vice versa. The crux of the procedure is to recognize the apparent PFs as seen by the transformers and then act so as to make the PFs be equal, that is, the control acts to make $\varphi 1 \approx \varphi 2$. A principal benefit of this subtle difference is that the method is impervious to mismatched impedance of the transformers.

As contrasted with some other schemes, and to the extent that the three-phase load is reasonably balanced between phases, the phasing of the control voltage and current signals need not be on the same phase for the two transformers.

18.8.4 Master–Follower Method

The master–follower method is just what the name says. One control is designated the master and commands, first, tap changing of the LTC with which it is in direct control and, secondly, the LTC of the follower. With the case of the follower, the sole intent is to bring the tap changer on the follower transformer to the same tap position as for the master.

The result is preferred operation for a case of identical transformers bused primary and secondary. By keeping the transformers on the same tap, there is no circulating current and no attendant losses except for the few seconds while the tap change is being accomplished. This method is the most commonly used worldwide.

The method requires that the transformers be identical as to numbers of taps and tap-step size as each action of the master is duplicated by the follower, and unequal turns ratios of the transformers would lead to continuing circulating current. The method is usually implemented using auxiliary relays which command the follower following an action of the master and then will not permit a subsequent action of the master until a feedback signal is received from the follower confirming that it has operated and is ready to receive another command from the master.

18.8.5 Negative Reactance Method

The negative (reverse) reactance method differs fundamentally in its means of operation from the other methods. Paradoxically consider the following:

1. It appears to have been the usual and preferred method to implement paralleling 50+ years ago.
2. As contrasted to the other methods described, it requires *no* intercontrol communication or knowledge of the status of the substation circuit breakers.
3. Every LTC control which conforms to the standard IEEE Std. C57.15 is equipped for the operation.

But

1. It is inherently inaccurate as to maintaining the exact voltage set point criteria.
2. It is applied by setting the line drop compensation settings. The LDC X setting will be a negative value (hence the name), and the LDC R setting will be established to minimize the voltage error at the load current magnitude and PF for which the settings are established. Selection of the best settings for LDC R and LDC X is not a trivial matter; literature of 50 years ago suggested selecting the values by "trial and error."

Apparently for these reasons, the method fell from favor to where it is seldom used in recent years.

The manner of operation is not intuitively obvious. A more complete description may be found (Harlow, 2003) but in principle and briefly first recall that the circulating current as is due to the LTCs being on differing tap positions is almost wholly reactive. This current, lagging in one transformer (the one on the higher tap position), leading in the other (the transformer on the lower tap position),

www.EngineeringEbooksPdf.com

multiplies times the (negative) LDC reactance setting to produce a voltage which biases the control's set points, respectively, higher or lower. Thus, the unit on the higher tap position, the unit driving the lagging current, is biased for a lower tap change operation and vice versa. Perhaps even less obvious is that the resultant two corrections will, in general, not balance until another phasor obtained by multiplying the circulating current to the LDC resistance setting is also included.

For an application, the LDC X setting (a negative value) is first selected. It serves as a sensitivity setting. The LDC R setting is then selected, its preferred value being a function of the load on the system, principally the load PF but also to a lesser extent, the load magnitude. The mathematics of the method produces a completely accurate voltage solution only at the load (magnitude and PF) for which the set points were established.

So what has changed over the 50 years … and why is it reasonable to consider the method again today?

1. The control: The controls in use 50 years ago were electromechanical and prone to error. IEEE Std. C57.15 valid for the control at that time allowed as much as 5% error in the voltage set point, and this did not include any additional error in the analog value setting. Today, the control system is limited by the standard to no greater than 1% error, usually allocated as 0.7% for the control and 0.3% for the instrument transformers; many control manufacturers claim 0.5% maximum error for their products. For these, being digital devices, there can be said to be zero error in the set points. Additionally, these controls all have capability of display of the system load conditions making it easy to know the conditions useful in establishing the LDC set points.
2. The system: Fifty years ago, there was little attention paid to distribution system load PF, and it would fluctuate as dictated by the load. Today, recognizing the benefit of operating the system at a consistent and high PF, it is common to speak of the desirability of volt-var control to improve voltage profiles and minimize system losses. Thus, it is common that shunt capacitors are in place in many substations and on distribution feeders to keep the load PF as seen at the substation quite high, in many cases exceeding 0.97. A reactive power controller switching shunt capacitors can serve the ancillary function of eliminating the largest part of the control voltage error.
3. Computer simulations: To have selected the best LDC R and LDC X settings for a given application by hand calculation, when it is probable that the engineer did not even have reliable information of the extremes of the loading, would be problematic at best. Computers now can model the system and quickly return the preferred settings. Then, the engineer can alter parameters such as the load magnitude and PF to see the error which occurs and decide its acceptability (Harlow, 2006). Consider reports of a study showing errors calculated for a system of three mismatched transformers where the error can be constrained to less than ±1.0 V (±0.83%) for a rather broad range of loads, and that without recourse to shunt capacitor switching.

18.9 Paralleling Methods Comparison

Many method selection decisions are made without quantification of the expected results. To give some appreciation of the performance of the different methods, the model of Figure 18.9 is employed. To be realistic for this discussion, the matter is limited to just two paralleled transformers. For the example model, consider the following:

- The transformers are 20 MVA, 115–13.2 kV with 5/8% taps.
- Transformers are, first, 8.5% impedance. T2 impedance of 10.0% and 12.5% will be studied.
- Secondary load is 40 MVA. For study, it may be at 0.99 or 0.80 PF.

www.EngineeringEbooksPdf.com

- HV bus tie breaker 52-T is normally closed. When it is closed, the system defines a classic circulating current problem.
- When the HV bus tie is open, the T2 side of the substation is fed by 50 km of 115 kV transmission line.
- When the HV bus tie is open, the 10 MVA at 0.99 PF load is supplied by the transmission line causing the primary bus voltage at T2 to drop relative to T1.
- Shunt capacitance can be added to the 13.2 kV bus.
- In the following tables the entry "Apparent Circulating Current" is the sum of the currents in each transformer divided by 2. In turn, the current in each transformer is that due to supply of the 40 MVA secondary load plus that due to true circulating current resulting from mismatched tap positions, when applicable.
- Control set points are as follows: Band center = 120.0 V, BW = 2.0 V, LDC R = 0.0 V, LDC X = 0.0 V (except in case of negative reactance paralleling LDC X = −9.3 V and LDC R = 2.6 V, these having been established as "best" for the 30 MVA, 0.97 PF load).
- Paralleling sensitivity relates to a setting provided on paralleling balancers. This is 100% where applicable.

Two matters of possible concern are studied: mismatch in transformer impedances and the situation of breaker 52-T opening causing load current to loop through the substation. Tables 18.1 through 18.10 summarize results.

18.9.1 Mismatched Transformer Impedances

The traditional "rule of thumb" criterion has been that the transformer impedances should be within 7.5% of each other. Tables 18.1 through 18.5 show results when they are not. For Tables 18.1 through 18.5, 52-T is closed and 52-C is open.

TABLE 18.1 Results of Apparent Circulating Current and Tap-Changer Action for Mismatched Transformer Impedances Using Total Current Responding (Traditional) Circulating Current Method

	% IZ		Tap Pos		Apparent	Control Command	
Load PF	T1	T2	T1	T2	$I_{circulating}$ (A)	T1	T2
0.99	8.5	8.5	0	0	0	None	None
All is balanced; there is no circulating current							
0.99	8.5	10.0	0	0	69.3 – j15.0	None	None
0.99	8.5	12.5	0	0	162.5 – j36.9	None	None
Mismatch of transformer impedance shows as "apparent" circulating current. With very high load PF (=0.99), the controls still recognize "in-band" condition							
0.8	8.5	10.0	0	0	54.9 – j44.9	Lower	None
0.8	8.5	10.0	−1	0	54.1 – j15.2	None	None
0.8	8.5	12.5	0	0	128.1 – j106.5	Lower	Raise
0.8	8.5	12.5	−1	0	127.1 – j80.1	Lower	Raise
0.8	8.5	12.5	−1	1	126.9 – j54.3	Lower	Raise
0.8	8.5	12.5	−2	1	125.9 – j27.9	None	None
With poor load PF (=0.80), the controls sense out-of-band condition and the algorithm for tap change command dictates tap change events until equilibrium is established							

www.EngineeringEbooksPdf.com

TABLE 18.2 Results of Apparent Circulating Current and Tap-Changer Action for Mismatched Transformer Impedances Using Reactive Current Responding Circulating Current Method

	%IZ		Tap Pos		Apparent	Control Command	
Load PF	T1	T2	T1	T2	$I_{circulating}$ (A)	T1	T2
0.99	8.5	8.5	0	0	0	None	None
All is balanced, there is no circulating current							
0.99	8.5	10.0	0	0	69.3 –j15.0	None	None
0.99	8.5	12.5	0	0	162.5 –j36.9	None	None
Mismatch of transformer impedances shows as "Apparent" circulating current. With very high load PF (=0.99), the controls still recognize "in-band" condition							
0.80	8.5	10.0	0	0	54.9 –j44.9	Lower	Raise
			–1	0	54.1 –j15.2	None	None
0.80	8.5	12.5	0	0	128.1 –j106.5	Lower	Raise
			–1	0	127.1 –j80.1	Lower	Raise
			–1	1	126.9 –j54.3	Lower	Raise
			–2	1	125.9 –j27.9	None	Raise
			–2	2	125.7 –j2.2	None	None
With poor PF (=0.80) the controls sense out-of-band and the algorithm for tap change commands dictates tap change events until equilibrium is established							

TABLE 18.3 Results of Apparent Circulating Current and Tap-Changer Action for Mismatched Transformer Impedances Using PF Recognition Method

	% IZ		Tap Pos		Apparent	Control Command	
Load PF	T1	T2	T1	T2	$I_{circulating}$ (A)	T1	T2
0.99	8.5	8.5	0	0	0	None	None
All is balanced; there is no circulating current							
0.99	8.5	10.0	0	0	69.3 – j15.0	None (Ld'g)	None (Lg'g)
0.99	8.5	12.5	0	0	162.5 – j36.9	None (Ld'g)	None (Lg'g)
0.8	8.5	10.0	0	0	54.9 – j44.9	None (Ld'g)	None (Lg'g)
0.8	8.5	12.5	0	0	128.1 – j106.5	None (Ld'g)	None (Lg'g)
Regardless of PF and impedance discrepancy, the controls sense vt voltage "in-band". No tap change is made							

18.9.2 Load Current to Primary Load

There have been reports of erratic operation of LTCs when, for the circuit of Figure 18.9, breaker 52-T opens causing there to be a current looping through the transformers to supply the load illustrated on the primary. Table 18.6 through 18.10 reveal pertinent results.

18.9.3 General Paralleling Methods: Conclusions

The example results shown are only the example results for one defined system. The details of an installation must be known and modeled to predict specific results. Then the question becomes to select the basis for preferred criteria: should it be to result in minimum total system losses for all foreseen operating conditions; what is the initial capital cost; what is the expected operational reliability, etc.; and what weighting factor does each consideration carry in the decision?

www.EngineeringEbooksPdf.com

TABLE 18.4 Results of Apparent Circulating Current and Tap-Changer Action for Mismatched Transformer Impedances Using Master–Follower Method (T1 = Master)

Load PF	% IZ T1	% IZ T2	Tap Pos T1	Tap Pos T2	Apparent $I_{circulating}$ (A)	Control Command T1	Control Command T2
0.99	8.5	8.5	0	0	0	None	NM
All is balanced; there is no circulating current							
0.99	8.5	10.0	0	0	69.3 – j15.0	None	NM
0.99	8.5	12.5	0	0	162.5 – j36.9	None	NM
0.8	8.5	10.0	0	0	54.9 – j44.9	None	NM
0.8	8.5	12.5	0	0	128.1 – j106.5	None	NM
Regardless of PF and impedance discrepancy, the controls sense vt voltage "in band." No tap change is made							

TABLE 18.5 Results of Apparent Circulating Current and Tap-Changer Action for Mismatched Transformer Impedances Using Negative Reactance Method (Load = 30 MVA)

Load PF	%IZ T1	%IZ T2	Tap Pos T1	Tap Pos T2	13.2 kV Bus Shunt Capacitance (kVAr)	Control Error (V) on 120 V base	Control Command T1	Control Command T2
0.99	8.5	8.5	0	0	0	0.67	None	None
0.98	8.5	8.5	0	0	0	0.29	None	None
0.97	8.5	8.5	0	0	0	−0.01	None	None
0.96	8.5	8.5	0	0	0	−0.23	None	None
0.95	8.5	8.5	0	0	0	−0.45	None	None
0.80	8.5	8.5	0	0	0	−2.4	None	None
For Negative Reactance method it is not meaningful to change the transformer impedance as the values of LDC set points would have been set differently originally. With this method the interesting matter is to study the result due to change in load PF. The controls LDC settings were optimized at 30 MVA and 0.97 PF; at 0.80 PF there is appreciable control voltage error								
0.80	8.5	8.5	0	0	12,000	0.07	None	None
Any control error due to poor load PF can be resolved with the addition of appropriate shunt capacitance in the substation								

TABLE 18.6 Results of Apparent Circulating Current and Tap-Changer Action for Situation of Open Breaker in HV Bus Using Total Current Responding (Traditional) Circulating Current Method

Load PF	% IZ T1	% IZ T2	Tap Pos T1	Tap Pos T2	Apparent $I_{circulating}$ (A)	Control Command T1	Control Command T2
0.99	8.5	8.5	0	0	0	None	None
All is balanced; there is no circulating current, then 52-T opens							
0.99	8.5	8.5	0	0	175.9 – j109.4	Lower	Raise
0.99	8.5	8.5	−1	0	173.1 – j81.7	None	Raise
0.99	8.5	8.5	−1	1	170.9 – j54.6	None	Raise
0.99	8.5	8.5	−1	2	168.8 – j27.4	None	Raise
0.99	8.5	8.5	−1	3	166.6 – j0.2	Raise	None
0.99	8.5	8.5	0	3	169.5 – j27.9	None	None
Tap changers gyrate for five steps before settling							

www.EngineeringEbooksPdf.com

TABLE 18.7 Results of Apparent Circulating Current and Tap-Changer Action for Situation of Open Breaker in HV Bus Using Reactive Current Responding Circulating Current Method

	%IZ		Tap Pos		Apparent	Control Command	
Load PF	T1	T2	T1	T2	$I_{circulating}$ (A)	T1	T2
0.99	8.5	8.5	0	0	0	None	None
All is balanced; there is no circulating current, then 52-T opens							
0.99	8.5	8.5	0	0	175.9 –j109.4	Lower	Raise
0.99	8.5	8.5	–1	0	173.1 –j81.7	None	Raise
0.99	8.5	8.5	–1	1	170.9 –j54.6	None	Raise
0.99	8.5	8.5	–1	2	168.8 –j27.4	None	Raise
0.99	8.5	8.5	–1	3	166.6 –j0.2	None	None
Tap changers settle after 4 steps							

TABLE 18.8 Results of Apparent Circulating Current and Tap-Changer Action for Situation of Open Breaker in HV Bus Using PF Recognition Method

	% IZ		Tap Pos		Apparent	Control Command	
Load PF	T1	T2	T1	T2	$I_{circulating}$ (A)	T1	T2
0.99	8.5	8.5	0	0	0	None	None
All is balanced; there is no circulating current, then 52-T opens							
0.99	8.5	8.5	0	0	175.9 – j109.4	Raise (Lg'g)	Raise (Ld'g)
0.99	8.5	8.5	0	1	173.8 – j82.2	None (Lg'g)	None (Ld'g)
Tap changers settle after one step							

TABLE 18.9 Results of Apparent Circulating Current and Tap-Changer Action for Situation of Open Breaker in HV Bus Using Master–Follower Method (T1 = Master)

	% IZ		Tap Pos		Apparent	Control Command	
Load PF	T1	T2	T1	T2	$I_{circulating}$ (A)	T1	T2
0.99	8.5	8.5	0	0	0	None	NM
All is balanced; there is no circulating current, then 52-T opens							
0.99	8.5	8.5	0	0	175.9 – j109.4	Raise	NM
0.99	8.5	8.5	1	1	176.6 – j109.8	None	NM
Control on transformer 1 is the master. Tap changers settle after one step							

TABLE 18.10 Results of Apparent Circulating Current and Tap-Changer Action for Situation of Open Breaker in HV Bus Using Negative Reactance Method (Load = 30 MVA)

	%IZ		Tap Pos		Apparent	Control Error (V)	Control Command	
Load PF	T1	T2	T1	T2	$I_{circulating}$ (A)	on 120 V base	T1	T2
0.97	8.5	8.5	0	0	0	–0.01	None	None
All balanced; there is no circulating current, then 52-T opens								
0.97	8.5	8.5	0	0	142.6 –j96.5		Lower	Raise
0.97	8.5	8.5	–1	0	139.9 –j68.9		None	Raise
0.97	8.5	8.5	–1	1	137.7 –j41.7		None	Raise
0.97	8.5	8.5	–1	2	135.4 –j14.5	T1=0.77 T2=0.89	None	None

www.EngineeringEbooksPdf.com

References

Beckwith Electric Co., Basic considerations for the application of LTC transformers and associated controls, Application Note 17, Beckwith Electric, Largo, FL, June 2000.

Beckwith Electric Co., Advanced paralleling of LTC transformers by the circulating current method, Application Note 13, Beckwith Electric, Largo, FL.

Fagan, K. C. and Amondson, W., Voltage optimization. *Transmission and Distribution World*, November 2010, 60–64.

Harlow, J. H., Let's rethink negative reactance transformer paralleling. *IEEE PES Transmission and Distribution Conference*, Dallas, TX, September 7–10, 2003, pp. 434–438.

Harlow, J. H., Consider the negative reactance method of control for paralleling of LTC transformers. *DistribuTECH Conference*, Tampa, FL, February 7–9, 2006.

IEEE Std C57.15-2009, *IEEE Standard Requirements, Terminology, and Test Code for Step-Voltage Regulators*, 2009.

Bibliography

IEEE Std C57.12.10-2010, *IEEE Standard Requirements for Liquid Immersed Power Transformers*, 2010.

Harlow Engineering Associates, LTC control and transformer paralleling, class notes. Chapter 1: *Basic Control of LTC Transformers and Step-Voltage Regulators*, Harlow Engineering Associates, Mentone, AL, 2011, pp. 1–21.

Tscheng, C. C. and Harlow, J. H., NYSEG operates substation transformers/regulators in parallel using negative reactance method of control. *Transmission and Distribution World*, March 2005, 32–37.

www.EngineeringEbooksPdf.com

19

Power Transformer Protection

Armando Guzmán
Schweitzer Engineering Laboratories, Inc.

Hector J. Altuve
Schweitzer Engineering Laboratories, Inc.

Gabriel Benmouyal
Schweitzer Engineering Laboratories, Inc.

19.1 Introduction **19**-1
19.2 Transformer Differential Protection **19**-2
19.3 Magnetizing Inrush, Overexcitation, and CT Saturation **19**-4
Inrush Currents • Transformer Overexcitation • CT Saturation
19.4 Methods for Discriminating Internal Faults from Inrush and Overexcitation Conditions **19**-7
Harmonic-Based Methods • Wave-Shape Recognition Methods
19.5 An Improved Approach for Transformer Protection **19**-14
Even-Harmonic Restraint • Fifth-Harmonic Blocking • DC Blocking
19.6 Current Differential Relay **19**-16
Data Acquisition, Filtering, Scaling, and Compensation • Restraint-Differential Element • DC Filtering and Blocking Logic • Relay Blocking Logic
19.7 Differential-Element Performance during Inrush Conditions **19**-19
Case 1 • Case 2 • Case 3
19.8 Conclusions **19**-26
References **19**-26

19.1 Introduction

Three characteristics generally provide means for detecting transformer internal faults [1]. These characteristics include an increase in phase currents, an increase in the differential current, and gas formation caused by the fault arc [2,3]. When transformer internal faults occur, immediate disconnection of the faulted transformer is necessary to avoid extensive damage and/or preserve power system stability and power quality. Three types of protection are normally used to detect these faults: overcurrent protection for phase currents, differential protection for differential currents, and gas accumulator or rate-of-pressure-rise protection for arcing faults.

Overcurrent protection with fuses or relays provided the first type of transformer fault protection [4], and it continues to be applied in small-capacity transformers. The differential principle for transformer protection was introduced by connecting an inverse-time overcurrent relay in the paralleled secondaries of the current transformers (CT) [4]. The percentage-differential principle [5], which was immediately applied to transformer protection [4,6,7], provided excellent results in improving the security of differential protection for external faults with CT saturation.

The analysis presented here focuses primarily on differential protection. Differential relays are prone to misoperation in the presence of transformer inrush currents, which result from transients in

www.EngineeringEbooksPdf.com

transformer magnetic flux. The first solution to this problem was to introduce an intentional time delay in the differential relay [4,6]. Another proposal was to desensitize the relay for a given time to override the inrush condition [6,7]. Others suggested adding a voltage signal to restrain [4] or to supervise the differential relay [8].

Researchers quickly recognized that the harmonic content of the differential current provided information that helped differentiate faults from inrush conditions. Kennedy and Hayward proposed a differential relay with only harmonic restraint for bus protection [9]. Hayward [10] and Mathews [11] further developed this method by adding percentage-differential restraint for transformer protection. These early relays used all of the harmonics for restraint. With a relay that used only the second harmonic to block, Sharp and Glassburn introduced the idea of harmonic blocking instead of restraining [12].

Many modern transformer differential relays use either harmonic restraint or blocking methods. These methods ensure relay security for a very high percentage of inrush and overexcitation cases. However, these methods do not work in cases with very low harmonic content in the operating current. Common harmonic restraint or blocking, introduced by Einval and Linders [13], increases relay security for inrush, but it could delay operation for internal faults combined with inrush in the nonfaulted phases.

Transformer overexcitation is another possible cause of differential-relay misoperation. Einval and Linders proposed the use of an additional fifth-harmonic restraint to prevent such misoperations [13]. Others have proposed several methods based on waveshape recognition to distinguish faults from inrush, and these methods have been applied in transformer relays [14–17]. However, these techniques do not identify transformer overexcitation conditions.

This chapter describes an improved approach for transformer differential protection using current-only inputs. The approach ensures security for external faults, inrush, and overexcitation conditions, and it provides dependability for internal faults. It combines harmonic restraint and blocking methods with a waveshape recognition technique. The improved method uses even harmonics for restraint and the dc component and the fifth harmonic to block operation.

19.2 Transformer Differential Protection

Percentage-restraint differential protective relays [5,6] have been in service for many years. Figure 19.1 shows a typical differential-relay connection diagram. Differential elements compare an operating current with a restraining current. The operating current (also called differential current), I_{OP}, can be obtained as the phasor sum of the currents entering the protected element:

$$I_{OP} = |\vec{I}_{W1} + \vec{I}_{W2}| \tag{19.1}$$

I_{OP} is proportional to the fault current for internal faults and approaches zero for any other operating (ideal) conditions.

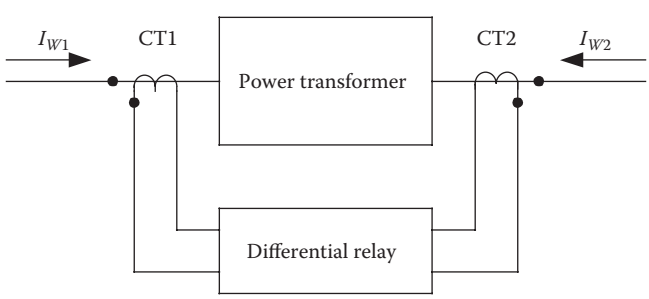

FIGURE 19.1 Typical differential-relay connection diagram.

www.EngineeringEbooksPdf.com

There are different alternatives for obtaining the restraining current, I_{RT}. The most common ones include the following:

$$I_{RT} = k|\vec{I}_{W1} - \vec{I}_{W2}| \tag{19.2}$$

$$I_{RT} = k\left(|\vec{I}_{W1}| + |\vec{I}_{W2}|\right) \tag{19.3}$$

$$I_{RT} = \text{Max}\left(|\vec{I}_{W1}|, |\vec{I}_{W2}|\right) \tag{19.4}$$

where k is a compensation factor, usually taken as 1 or 0.5.

Equations 19.3 and 19.4 offer the advantage of being applicable to differential relays with more than two restraint elements.

The differential relay generates a tripping signal if the operating current, I_{OP}, is greater than a percentage of the restraining current, I_{RT}:

$$I_{OP} > SLP \cdot I_{RT} \tag{19.5}$$

Figure 19.2 shows a typical differential-relay operating characteristic. This characteristic consists of a straight line having a slope (SLP) and a horizontal straight line defining the relay minimum pickup current, I_{PU}. The relay operating region is located above the slope characteristic (Equation 19.5), and the restraining region is below the slope characteristic.

Differential relays perform well for external faults as long as the CTs reproduce the primary currents correctly. When one of the CTs saturates, or if both CTs saturate at different levels, false operating current appears in the differential relay and could cause relay misoperation. Some differential relays use the harmonics caused by CT saturation for added restraint and to avoid misoperations [9]. In addition, the slope characteristic of the percentage-differential relay provides further security for external faults with CT saturation. A variable-percentage or dual-slope characteristic, originally proposed by Sharp and Glassburn [12], further increases relay security for heavy CT saturation. Figure 19.2 shows this characteristic as a dotted line.

CT saturation is only one of the causes of false operating current in differential relays. In the case of power transformer applications, other possible sources of error include the following:

- Mismatch between the CT ratios and the power transformer ratio
- Variable ratio of the power transformer caused by a tap changer
- Phase shift between the power transformer primary and secondary currents for delta–wye connections

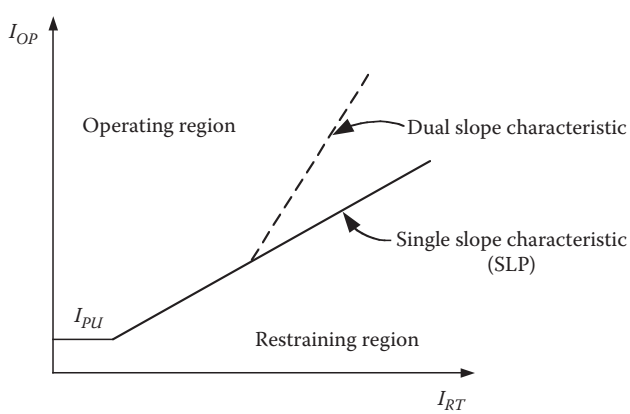

FIGURE 19.2 Differential relay with dual-slope characteristic.

www.EngineeringEbooksPdf.com

- Magnetizing inrush currents created by transformer transients because of energization, voltage recovery after the clearance of an external fault, or energization of a parallel transformer
- High exciting currents caused by transformer overexcitation

The relay percentage-restraint characteristic typically solves the first two problems. A proper connection of the CTs or emulation of such a connection in a digital relay (auxiliary CTs historically provided this function) addresses the phase-shift problem. A very complex problem is that of discriminating internal fault currents from the false differential currents caused by magnetizing inrush and transformer overexcitation.

19.3 Magnetizing Inrush, Overexcitation, and CT Saturation

Inrush or overexcitation conditions in a power transformer produce false differential currents that could cause relay misoperation. Both conditions produce distorted currents because they are related to transformer core saturation. The distorted waveforms provide information that helps to discriminate inrush and overexcitation conditions from internal faults. However, this discrimination can be complicated by other sources of distortion such as CT saturation, nonlinear fault resistance, or system resonant conditions.

19.3.1 Inrush Currents

The study of transformer excitation inrush phenomena has spanned more than 50 years [18–26]. Magnetizing inrush occurs in a transformer whenever the polarity and magnitude of the residual flux do not agree with the polarity and magnitude of the ideal instantaneous value of steady-state flux [22]. Transformer energization is a typical cause of inrush currents, but any transient in the transformer circuit can generate these currents. Other causes include voltage recovery after the clearance of an external fault or after the energization of a transformer in parallel with a transformer that is already in service. The magnitudes and waveforms of inrush currents depend on a multitude of factors and are almost impossible to predict [23]. The following list summarizes the main characteristics of inrush currents:

- Generally contain dc offset, odd harmonics, and even harmonics [22,23].
- Typically composed of unipolar or bipolar pulses, separated by intervals of very low current values [22,23].
- Peak values of unipolar inrush current pulses decrease very slowly. Time constant is typically much greater than that of the exponentially decaying dc offset of fault currents.
- Relay currents are delta currents (a delta winding is encountered in either the power- or current-transformer connections, or is simulated in the relay), which means that currents of adjacent windings are subtracted, and the following occur:

  DC components are subtracted.
  Fundamental components are added at 60°.
  Second harmonics are added at 120°.
  Third harmonics are added at 180° (they cancel out), etc.

Sonnemann et al. initially claimed that the second-harmonic content of the inrush current was never less than 16%–17% of the fundamental [22]. However, transformer energization with reduced voltages can generate inrush currents with second-harmonic content less than 10%, as will be discussed later in this section.

19.3.2 Transformer Overexcitation

The magnetic flux inside the transformer core is directly proportional to the applied voltage and inversely proportional to the system frequency. Overvoltage and/or underfrequency conditions can produce flux levels that saturate the transformer core. These abnormal operating conditions can exist in any part of the power system, so any transformer can be exposed to overexcitation.

www.EngineeringEbooksPdf.com

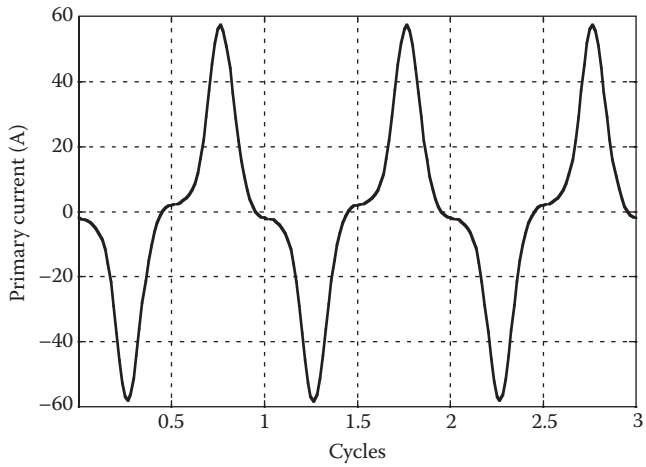

FIGURE 19.3 Exciting current of an overexcited transformer; overvoltage of 150% applied to a 5 kVA, 230/115 V single-phase transformer.

Transformer overexcitation causes transformer heating and increases exciting current, noise, and vibration. A severely overexcited transformer should be disconnected to avoid transformer damage. Because it is difficult, with differential protection, to control the amount of overexcitation that a transformer can tolerate, transformer differential protection tripping for an overexcitation condition is not desirable. Instead, use separate transformer overexcitation protection, and the differential element should not trip for these conditions. One alternative is a V/Hz relay that responds to the voltage/frequency ratio.

Overexcitation of a power transformer is a typical case of ac saturation of the core that produces odd harmonics in the exciting current. Figure 19.3 shows the exciting current recorded during a real test of a 5 kVA, 230/115 V, single-phase laboratory transformer [24]. The current corresponds to an overvoltage condition of 150% at nominal frequency. For comparison purposes, the peak value of the transformer nominal current is 61.5 A, and the peak value of the exciting current is 57.3 A.

Table 19.1 shows the most significant harmonics of the current signal depicted in Figure 19.3. Harmonics are expressed as a percentage of the fundamental component. The third harmonic is the most suitable for detecting overexcitation conditions, but either the delta connection of the CTs or the delta-connection compensation of the differential relay filters out this harmonic. The fifth harmonic, however, is still a reliable quantity for detecting overexcitation conditions.

Einval and Linders [13] were the first to propose using the fifth harmonic to restrain the transformer differential relay. They recommended setting this restraint function at 35% of fifth harmonic with respect to the fundamental. Figure 19.4 [25] shows the harmonic content of the excitation current of a power transformer as a function of the applied voltage. As the voltage increases, saturation and the exciting current increase. The odd harmonics, expressed as a percentage of the fundamental, first increase and then begin to decrease at overvoltages on the order of 115%–120%. Setting the differential-relay

TABLE 19.1 Harmonic Content of the Current Signal Shown in Figure 19.3

Frequency Component	Magnitude (Primary Amps)	Percentage of Fundamental
Fundamental	22.5	100.0
Third	11.1	49.2
Fifth	4.9	21.7
Seventh	1.8	8.1

www.EngineeringEbooksPdf.com

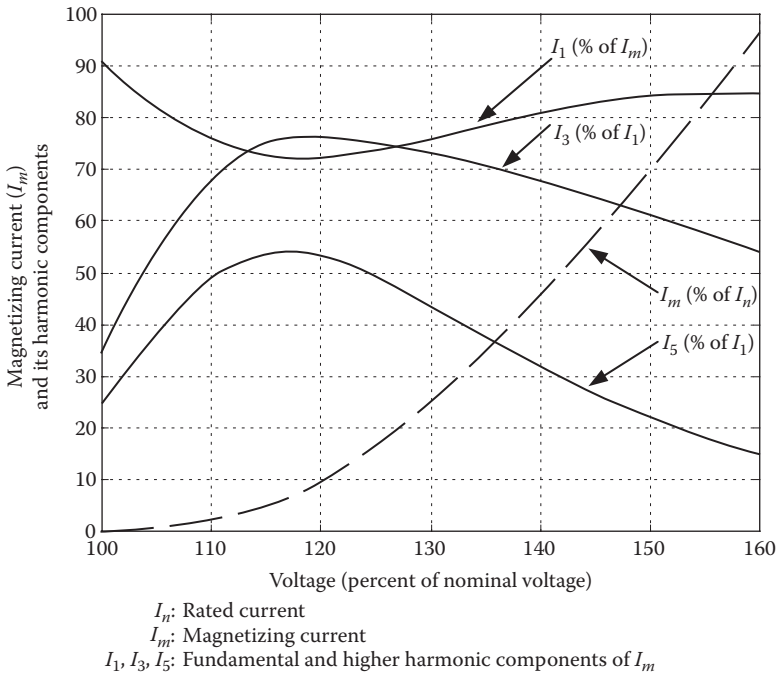

FIGURE 19.4 Harmonic content of transformer exciting current as a function of the applied voltage. (From Cooper Power Systems, *Electric Power System Harmonics: Design guide, Cooper Power Systems*, Bulletin 87011, Franksville, WI, 1990. With permission.)

fifth-harmonic restraint to 35% ensures security for overvoltage conditions less than 140%. For greater overvoltages, which could quickly destroy the transformer in a few seconds, it is desirable to have the differential-relay fast tripping added to that of the transformer-overexcitation relay.

19.3.3 CT Saturation

CT saturation during faults and its effect on protective relays have received considerable attention [26–31]. In the case of transformer-differential protection, the effect of CT saturation is double-edged. For external faults, the resulting false differential current can produce relay misoperation. In some cases, the percentage restraint in the relay addresses this false differential current. For internal faults, the harmonics resulting from CT saturation could delay the operation of differential relays having harmonic restraint or blocking.

The main characteristics of CT saturation are the following:

- CTs reproduce faithfully the primary current for a given time after fault inception [30]. The time to CT saturation depends on several factors, but it is typically one cycle or longer.
- The worst CT saturation is produced by the dc component of the primary current. During this dc saturation period, the secondary current can contain dc offset and odd and even harmonics [10,28].
- When the dc offset dies out, the CT has only ac saturation, characterized by the presence of odd harmonics in the secondary current [9,10,26].

Figure 19.5 shows a typical secondary current waveform for computer-simulated ac symmetrical CT saturation. This figure also depicts the harmonic content of this current. The figure confirms the presence of odd harmonics and the absence of even harmonics in the secondary current.

www.EngineeringEbooksPdf.com

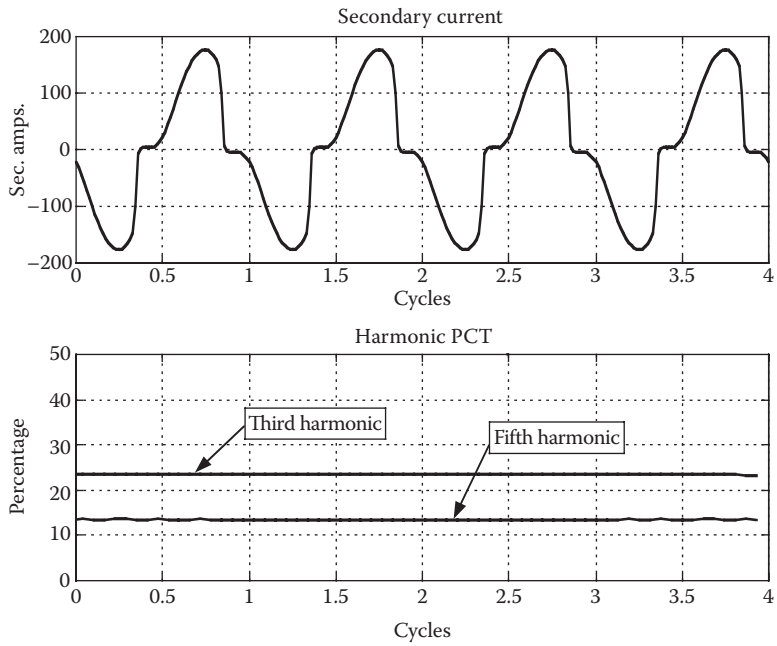

FIGURE 19.5 Typical secondary current for symmetrical CT saturation and its harmonic content.

19.4 Methods for Discriminating Internal Faults from Inrush and Overexcitation Conditions

Early transformer differential-relay designs used time delay [4,6] or a temporary desensitization of the relay [6,7] to override the inrush current. An additional voltage signal to restrain [4] or to supervise (block) [8] the differential relay has also been proposed. These proposals increased operating speed at the cost of higher complexity. Recent methods use voltage information to provide transformer protection [32–35]. It is recognized, however, that while an integrated digital substation-protection system provides voltage information, this is not the case for a stand-alone differential relay. Adding voltage signals to such a relay requires voltage transformers that are normally not available in the installation.

The current-based methods for discriminating internal faults from inrush and overexcitation conditions fall into two groups: those using harmonics to restrain or block [9–13] and those based on waveshape identification [14–17].

19.4.1 Harmonic-Based Methods

The harmonic content of the differential current can be used to restrain or to block the relay, providing a means to differentiate between internal faults and inrush or overexcitation conditions. The technical literature on this topic has not clearly identified the differences between restraint and blocking.

The first harmonic-restrained differential relays used all harmonics to provide the restraint function [9–11]. The resulting high level of harmonic restraint provided security for inrush conditions at the expense of operating speed for internal faults with CT saturation.

Figure 19.6 shows a simplified schematic diagram of a well-known transformer differential relay with harmonic restraint [36]. Auxiliary CTs (not shown) form the operating and restraint currents of the relay. The operating current is the phasor sum of the currents entering the protected transformer (Equation 19.1). For two-winding transformers, the restraint current is formed in a through-CT having

www.EngineeringEbooksPdf.com

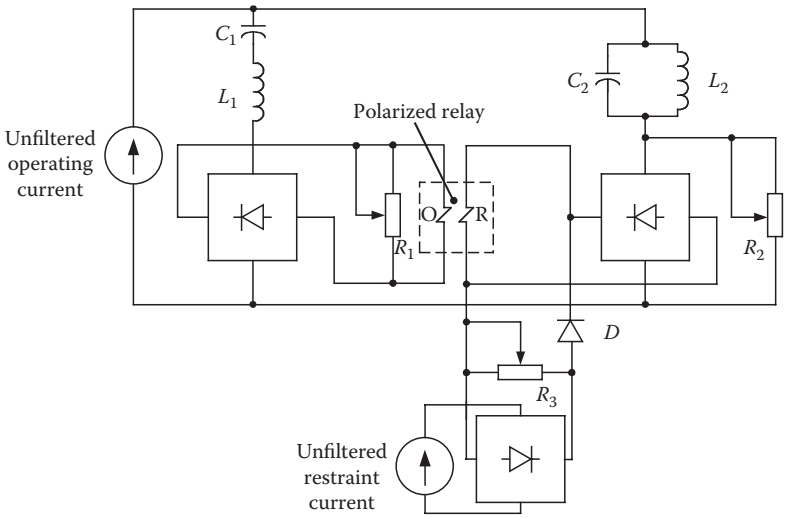

FIGURE 19.6 Transformer differential relay with harmonic restraint.

two primary circuits, one of which is connected in each of the main-CT circuits. The resulting restraint current is the phasor difference of the currents entering the transformer (Equation 19.2). For three-winding transformers, three independent through-CTs are provided, one for each of the CT windings. The secondary currents of the through-CTs are independently rectified and summed to form a restraint current with the following form:

$$I_{RT} = k\left(\left|\vec{I}_{W1}\right| + \left|\vec{I}_{W2}\right| + \left|\vec{I}_{W3}\right|\right) \tag{19.6}$$

The main operating unit of the transformer differential relay is a polarized relay (see Figure 19.6). This unit performs an amplitude comparison of the rectified currents applied to the operating (O) and restraint (R) coils. The unit trips when the current in the operating coil is greater than the current in the restraint coil.

The circuit supplying the operating coil of the polarized relay includes a band-pass series filter (L_1, C_1) tuned to 60 Hz. The circuit supplying the restraint coil of the polarized relay contains a notch-type parallel filter (L_2, C_2) tuned to 60 Hz. Restraint current is also supplied to the restraint coil to provide a percentage-differential characteristic. As a result, the polarized unit compares the fundamental component of the operating current with a restraint signal consisting of the harmonics of the operating current plus the unfiltered restraint current.

The differential relay operating condition can be expressed as

$$I_{OP} > SLP \cdot I_{RT} + K_2 I_2 + K_3 I_3 + \cdots \tag{19.7}$$

where

I_{OP} represents the fundamental component of the operating current
I_2, I_3,… are the higher harmonics
I_{RT} is the unfiltered restraint current
K_2, K_3,… are constant coefficients

Resistor R_1 (see Figure 19.6) provides adjustment of the minimum pickup current, I_{PU}, of the differential relay (see Figure 19.2). Resistor R_2 controls the level of harmonic restraint in the relay. Resistor R_3 provides the slope percentage adjustment; it has three taps corresponding to the slope values of 15%, 25%, and 40%.

www.EngineeringEbooksPdf.com

During transformer-magnetizing inrush conditions, the unfiltered operating current may, in addition to harmonics, contain a dc-offset component. The band-pass filter (L_1, C_1) blocks the dc component, but the notch filter (L_2, C_2) passes the dc component, thus providing an additional temporary restraint that increases relay security for inrush.

Diode D (see Figure 19.6) did not appear in the initial version of this transformer differential relay [11]. For high values of the restraint current, diode D conducts, and Equation 19.7 is valid. On the other hand, the diode cuts off for low-restraint currents, and only the operating-current harmonics are applied to the restraint coil of the polarized relay. In this case, the differential-relay operation condition is as follows:

$$I_{OP} > K_2 I_2 + K_3 I_3 + \cdots \tag{19.8}$$

The transformer differential relay also contains an instantaneous overcurrent element (not shown) that provides instantaneous tripping for heavy internal faults, even if the CTs saturate.

Einval and Linders [13] designed a three-phase differential relay with second- and fifth-harmonic restraint. This design complemented the idea of using only the second harmonic to identify inrush currents (originally proposed by Sharp and Glassburn [12]), by using the fifth harmonic to avoid misoperations for transformer overexcitation conditions.

The relay [13] includes air-gap auxiliary CT that produce voltage secondary signals and filters out the dc components of the input currents. A maximum-voltage detector produces the percentage-differential-restraint voltage, so the restraint quantity is of the form shown in Equation 19.4. The relay forms an additional restraint voltage by summing the second- and fifth-harmonic components of a voltage proportional to the operating current. The basic operation equation for one phase can be expressed according to the following:

$$I_{OP} > SLP \cdot I_{RT} + K_2 I_2 + K_5 I_5 \tag{19.9}$$

Einval and Linders [13] first introduced the concept of common harmonic restraint in this relay. The harmonic-restraint quantity is proportional to the sum of the second- and fifth-harmonic components of the three relay elements. The relay-operation equation is of the following form:

$$I_{OP} > SLP \cdot I_{RT} + \sum_{n=1}^{3} (K_2 I_{2n} + K_5 I_{5n}) \tag{19.10}$$

Sharp and Glassburn [12] were first to propose harmonic blocking. Figure 19.7 depicts a simplified schematic diagram of the transformer differential relay with second-harmonic blocking [12]. The relay consists of a differential unit, DU, and a harmonic blocking unit, HBU. Differential-relay tripping requires operation of both DU and HBU units.

In the differential unit (Figure 19.7a), an auxiliary CT (not shown) forms the operating current according to Equation 19.1. This current is rectified and applied to the operating coil of a polarized relay unit. Auxiliary air-gap CT (not shown) produce secondary voltages that are proportional to the transformer winding currents. These voltages are rectified by parallel-connected rectifier bridges, which behave as a maximum voltage detector. The resulting restraint current, applied to the restraint coil of the polarized relay unit, has the form of Equation 19.4. The polarized relay unit performs an amplitude comparison of the operating and the restraint currents and generates the relay percentage-differential characteristic (Equation 19.5). Resistor R_1 (see Figure 19.7a) provides the slope percentage adjustment for the differential relay. An auxiliary saturating transformer (not shown) connected in the operating circuit provides a variable slope characteristic.

In the harmonic blocking unit (Figure 19.7b), an auxiliary air-gap CT (not shown) generates a version of the operating current (Equation 19.1) without the dc-offset component, which is blocked by the air-gap transformer. The fundamental component and higher harmonics of the operating current are

www.EngineeringEbooksPdf.com

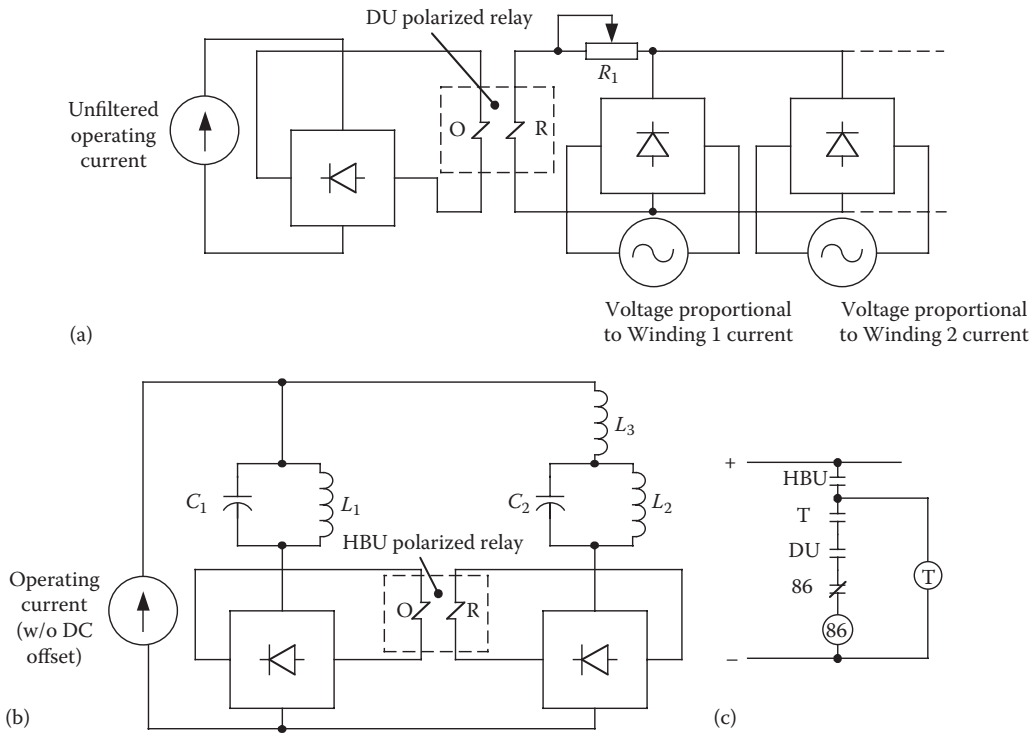

FIGURE 19.7 Transformer differential relay with second-harmonic blocking. (a) Differential unit, DU, (b) harmonic blocking unit, HBU and (c) simplified contact logic.

passed to two parallel circuits, rectified, and applied to the operating and restraint coils of the polarized relay unit. The circuit supplying the operating coil of the polarized relay unit includes a notch-type parallel filter (L_1, C_1) tuned to 120 Hz. The circuit supplying the restraint coil of the polarized relay contains a low-pass filter (L_3) combined with a notch filter (L_2, C_2) tuned to 60 Hz. The series combination of both filters passes the second harmonic and rejects the fundamental component and remaining harmonics of the operating current. As a result, the polarized relay compares an operating signal formed by the fundamental component plus the third- and higher-order harmonics of the operating current, with a restraint signal that is proportional to the second harmonic of the operating current. The operating condition of the harmonic blocking unit, HBU, can be expressed as follows:

$$I_{OP} + K_3 I_3 + K_4 I_4 + \cdots > K_2 I_2 \tag{19.11}$$

Figure 19.7c shows a simplified diagram of the relay contact logic. Transient response of the filters for inrush currents with low second-harmonic content can cause differential-relay misoperation. A time-delay auxiliary relay, T, shown in Figure 19.7c, prevents this misoperation. The relay also includes an instantaneous overcurrent unit (not shown) to provide fast tripping for heavy internal faults.

Typically, digital transformer differential relays use second- and fifth-harmonic blocking logic. Figure 19.8a shows a logic diagram of a differential element having second- and fifth-harmonic blocking. A tripping signal requires fulfillment of the operation depicted in Equation 19.5 without fulfillment of the following blocking conditions (Equations 19.12 and 19.13):

$$I_{OP} < K_2 I_2 \tag{19.12}$$

$$I_{OP} < K_5 I_5 \tag{19.13}$$

www.EngineeringEbooksPdf.com

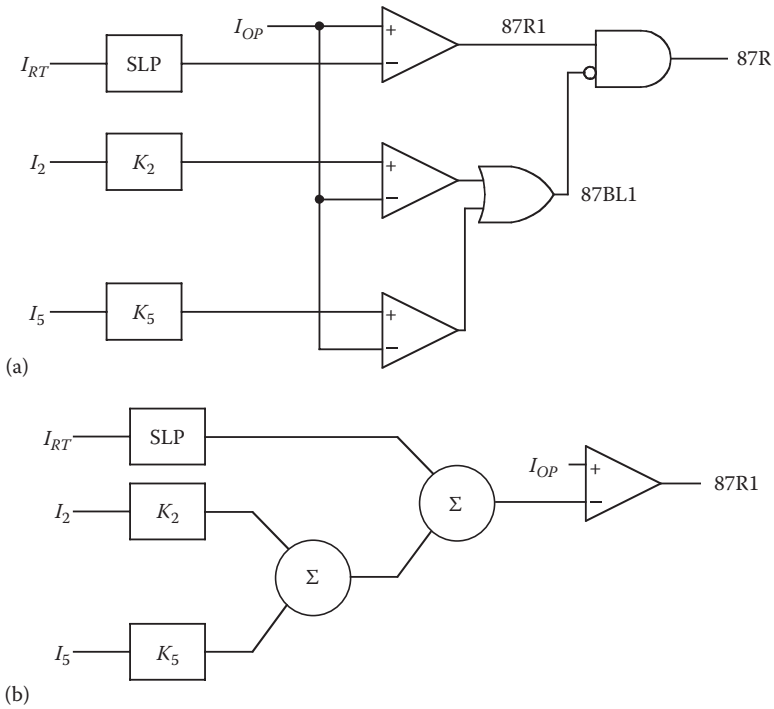

FIGURE 19.8 Two approaches to a differential element. (a) Harmonic blocking and (b) harmonic restraint.

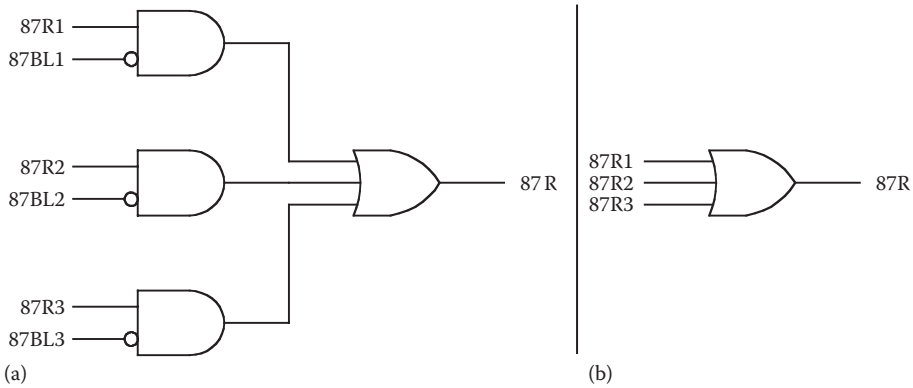

FIGURE 19.9 Three-phase differential relay with: (a) independent harmonic blocking and (b) independent harmonic restraint.

Figure 19.8b depicts the logic diagram of a differential element using second- and fifth-harmonic restraint. Figure 19.9 shows the three-phase versions of the transformer differential relay with independent harmonic blocking or restraint. The relay is composed of three differential elements of the types shown in Figure 19.8. In both cases, a tripping signal results when any one of the relay elements asserts.

Note that in the harmonic-restraint element (see Figure 19.8b), the operating current, I_{OP}, should overcome the combined effects of the restraining current, I_{RT}, and the harmonics of the operating current. On the other hand, in the harmonic-blocking element, the operating current is independently compared with the restraint current and the harmonics. Table 19.2 summarizes the results of a qualitative comparison of the harmonic restraint (using all harmonics) and blocking methods for transformer differential protection.

www.EngineeringEbooksPdf.com

TABLE 19.2 Comparison of Harmonic Restraint and Blocking Methods

	All-Harmonic Restraint (HR)	Harmonic Blocking (HB)	Remarks
Security for external faults	Higher	Lower	HR always uses harmonics from CT saturation for additional restraint; HB only blocks if the harmonic content is high
Security for inrush	Higher	Lower	HR adds the effects of percentage and harmonic restraint; HB evaluates the harmonics independently
Security for overexcitation	Higher	Lower	Same as above; however, a fifth-harmonic blocking scheme is the best solution, as will be shown in a later section
Dependability	Lower	Higher	Harmonics from CT saturation reduce the sensitivity of HR for internal faults; the use of only even harmonics solves this problem
Speed	Lower	Higher	Percentage differential and harmonic blocking run in parallel in HB
Slope characteristic	Harmonic dependent	Well defined	HB slope characteristic is independent from harmonics
Testing	Results depend upon harmonics	Straightforward	Same as above

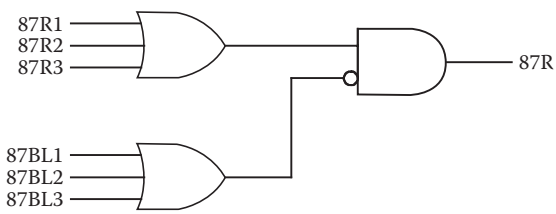

FIGURE 19.10 Common harmonic blocking method.

The comparison results given in Table 19.2 suggest use of the blocking method, if security for inrush can be guaranteed. However, it is not always possible to guarantee security for inrush, as is explained later in this chapter. Therefore, harmonic restraint is an alternative method for providing relay security for inrush currents having low harmonic content.

Another alternative is to use common harmonic restraint or blocking. This method is simple to implement in a blocking scheme and is the preferred alternative in present-day digital relays. Figure 19.10 shows a logic diagram of the common harmonic blocking method.

A method that provides a compromise in reliability between the independent- and common-harmonic blocking methods, described earlier, forms a composite signal that contains information on the harmonics of the operating currents of all relay elements. Comparison of this composite signal with the operating current determines relay operation.

The composite signal, I_{CH}, may be of the following form:

$$I_{CH} = \sum_{n=1}^{3} K_2 I_{2n} + K_3 I_{3n} + \cdots \tag{19.14}$$

I_{CH} may contain all or only part of the harmonics of the operating current. Another possibility is to calculate the root-mean-square (rms) value of the harmonics for each relay element, I_{Hn}:

$$I_{Hn} = \sqrt{I_{2n}^2 + I_{3n}^2 + \cdots} \tag{19.15}$$

www.EngineeringEbooksPdf.com

The composite signal, I_{CH}, can then be calculated as some type of an average value using Equation 19.16 or 19.17.

$$I_{CH} = \frac{1}{3}\sum_{n=1}^{3} I_{Hn} \tag{19.16}$$

$$I_{CH} = \frac{1}{3}\sqrt{\sum_{n=1}^{3} I_{Hn}^2} \tag{19.17}$$

The relay blocking condition is the following:

$$I_{OP} < K_{CH}\, I_{CH} \tag{19.18}$$

Common-harmonic-blocking logic provides high security but sacrifices some dependability. Energization of a faulted transformer could result in harmonics from the inrush currents of the non-faulted phases, and these harmonics could delay relay operation.

19.4.2 Wave-Shape Recognition Methods

Other methods for discriminating internal faults from inrush conditions are based on direct recognition of the waveshape distortion of the differential current.

Identification of the separation of differential current peaks represents a major group of waveshape recognition methods. Bertula [37] designed an early percentage-differential relay in which the contacts vibrated for inrush current (because of the low current intervals) and remained firmly closed for symmetrical currents corresponding to internal faults. Rockefeller [16] proposed blocking relay operation if successive peaks of the differential current fail to occur at about 7.5–10 ms.

A well-known principle [14,38] recognizes the length of the time intervals during which the differential current is near zero. Figure 19.11 depicts the basic concept behind this low-current-detection method. The differential current is compared with positive and negative thresholds having equal magnitudes. This comparison helps to determine the duration of the intervals during which the absolute value

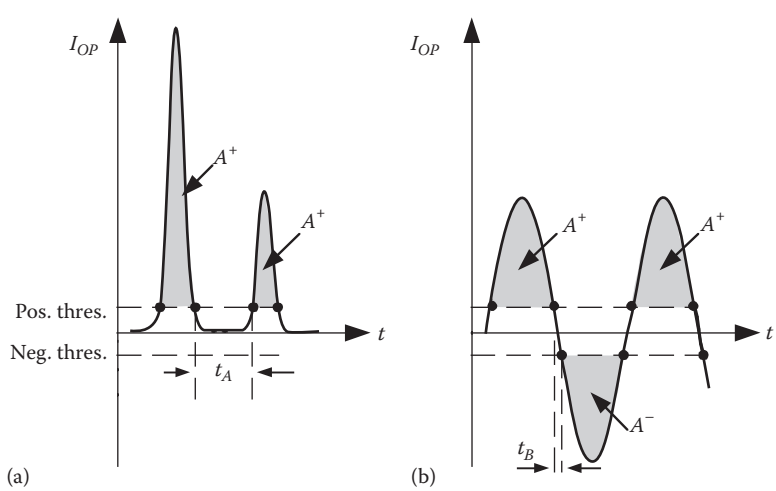

FIGURE 19.11 Differential-relay blocking based on recognizing the duration time of low-current intervals. (a) Inrush current and (b) internal fault current.

www.EngineeringEbooksPdf.com

of the current is less than the absolute value of the threshold. The time intervals are then electronically compared with a threshold value equal to one-quarter cycle. For inrush currents (Figure 19.11a), the low-current intervals, t_A, are greater than one-quarter cycle, and the relay is blocked. For internal faults (Figure 19.11b), the low-current intervals, t_B, are less than one-quarter cycle, and the relay operates.

Using the components of the rectified differential current provides an indirect way to identify the presence of low-current intervals. Hegazy [39] proposed comparing the second harmonic of the rectified differential current with a given threshold to generate a tripping signal. Dmitrenko [40] proposed issuing a tripping signal if the polarity of a summing signal remains unchanged. This signal is the sum of the dc and amplified fundamental components of the rectified differential current.

Another group of methods makes use of the recognition of dc offset or asymmetry in the differential current. Some early relays [15,41,42] used the saturation of an intermediate transformer by the dc offset of the differential current as a blocking method. A transient additional restraint based on the dc component was an enhancement to a well-known harmonic-restraint transformer differential relay [11]. Michelson [43] proposed comparing the amplitudes of the positive and negative semicycles of the differential current with given thresholds in two different polarized elements. Both elements must pick up to produce a trip. Rockefeller [16] suggested extending this idea to a digital relay.

Another alternative [44] is to use the difference of the absolute values of the positive and negative semicycles of the differential current for restraint. It has also been proposed [44] to use the amplitude of the negative semicycles of the differential current as the relay operating quantity. The advantage of using the negative semicycle is that it has the opposite polarity with respect to the dc component. More recently, Wilkinson [17] proposed making separate percentage-differential comparisons on both semicycles of the differential current. Tripping occurs if an operation condition similar to Equation 19.7 is true for both semicycles.

19.5 An Improved Approach for Transformer Protection

The evaluation in the previous section of existing harmonic-restraint/blocking methods makes clear that independent restraint/blocking methods may fail to ensure security for some real-life inrush conditions. Common harmonic restraint/blocking could provide solutions, but the behavior of these methods for internal faults combined with inrush currents requires further study.

Combining restraint and blocking into an independent restraint/blocking method provides an improved approach to transformer differential protection. Even harmonics of the differential current provide restraint, while both the fifth harmonic and the dc component block relay operation.

19.5.1 Even-Harmonic Restraint

In contrast to the odd harmonics ac CT saturation generates, even harmonics are a clear indicator of magnetizing inrush. Even harmonics resulting from dc CT saturation are transient in nature. It is important to use even harmonics (and not only the second harmonic) to obtain better discrimination between inrush and internal fault currents.

Tests suggest use of even harmonics (second and fourth) in a restraint scheme that ensures security for inrush currents having very low second-harmonic current. The operation equation is:

$$I_{OP} > SLP \cdot I_{RT} + K_2 I_2 + K_4 I_4 \tag{19.19}$$

19.5.2 Fifth-Harmonic Blocking

It is a common practice to use the fifth harmonic of the operation current to avoid differential-relay operation for transformer overexcitation conditions [13]. A preferred solution may be a harmonic blocking scheme in which the fifth harmonic is independently compared with the operation current. In this

www.EngineeringEbooksPdf.com

scheme, a given relay setting, in terms of fifth-harmonic percentage, always represents the same overexcitation condition. In a fifth-harmonic restraint scheme, a given setting may represent different overexcitation conditions, depending on the other harmonics that may be present.

Relay tripping in this case requires fulfillment of Equation 19.19 and not Equation 19.13.

19.5.3 DC Blocking

The improved method of even-harmonic restraint and fifth-harmonic blocking provides very high relay security for inrush and overexcitation conditions. There are, however, some inrush cases in which the differential current is practically a pure sine wave. One of the real cases analyzed later exhibits such a behavior. Any harmonic-based method could cause relay misoperation in such extreme inrush cases.

The dc component of inrush current typically has a greater time constant than that for internal faults. The presence of dc offset in the inrush current is an additional indicator that can be used to guarantee relay security for inrush. This waveshape recognition method is relatively easy to apply in a digital relay, because extraction of the dc component is a low-pass filtering process.

The improved method splits the differential current into its positive and negative semicycles and calculates one-cycle sums for both semicycles. Then, the method uses the ratio of these sums to block relay operation. The one-cycle sum of the positive semicycle is proportional to the area A^+ (see Figure 19.11); the one-cycle sum of the negative semicycle is proportional to the area A^-.

The sum, S^+, of the positive-current samples is given by the following equations:

$$S^+ = \left| \sum_{k=1}^{N} i_k \right| \rightarrow (i_k > 0) \tag{19.20}$$

$$S^+ = 0 \rightarrow (i_k \leq 0) \tag{19.21}$$

where

i_k represents the current samples

N is the number of samples per cycle

The sum S^- of the negative-current samples is given by:

$$S^- = \left| \sum_{k=1}^{N} i_k \right| \rightarrow (i_k < 0) \tag{19.22}$$

$$S^- = 0 \rightarrow (i_k \geq 0) \tag{19.23}$$

Calculate the dc ratio, *DCR*, according to Equation 19.24, to account for both positive and negative dc offsets:

$$DCR = \frac{\text{Min}(S^+, S^-)}{\text{Max}(S^+, S^-)} \tag{19.24}$$

Equation 19.24 gives a *DCR* value that is normalized (the value of *DCR* is always between 0 and 1) and also avoids division by 0. By comparing *DCR* with a 0.1 threshold, the relay dc-blocking method is implemented:

$$DCR < 0.1 \tag{19.25}$$

Relay tripping requires the fulfillment of Equation 19.19 but not Equation 19.13 or 19.25.

www.EngineeringEbooksPdf.com

Selecting a value for the threshold in Equation 19.25 means deciding on a compromise between security and speed. A high value (near 1) affords high security but is detrimental to speed. From tests, a value of 0.1 is selected as a good solution. The delay is practically negligible for system X/R ratios as great as 40.

The response of this dc blocking method depends on the dc signal information apart from the harmonic content of the differential current. For example, the method ensures dependability for internal faults with CT saturation and maintains its security during inrush conditions with low even-harmonic content.

19.6 Current Differential Relay

The relay consists of three differential elements. Each differential element provides percentage-differential protection with independent even-harmonic restraint and fifth-harmonic and dc blocking. The user may select even-harmonic blocking instead of even-harmonic restraint. In such a case, two blocking modes are available: (1) independent harmonic and dc blocking and (2) common harmonic and dc blocking.

19.6.1 Data Acquisition, Filtering, Scaling, and Compensation

Figure 19.12 shows the block diagram of the data acquisition, filtering, scaling, and compensation sections for Winding 1 currents. The input currents are the CT secondary currents from Winding 1 of the transformer. The data-acquisition system includes analog low-pass filters and analog-to-digital converters. The digitalized current samples are the inputs to four digital band-pass filters. These filters extract the samples corresponding to the fundamental component and to the second, fourth, and fifth (not shown) harmonics of the input currents. A dc filter (not shown) also receives the current samples as inputs and forms the one-cycle sums of the positive and negative values of these samples. The outputs of the digital filters are then processed mathematically to provide the scaling and connection compensation required by the power and CTs.

19.6.2 Restraint-Differential Element

Figure 19.13 shows a schematic diagram of one of the percentage-differential elements with even-harmonic restraint (Element 1). Inputs to the differential element are the filtered, scaled, and compensated sets of samples corresponding to the fundamental component and second and fourth harmonics of the currents from each of the transformer windings. The magnitude of the sum of the fundamental-component currents forms the operating current, IOP1, according to Equation 19.1. The scaled sum of the magnitudes of the fundamental-component currents forms the restraint current, IRT1, according to Equation 19.3,

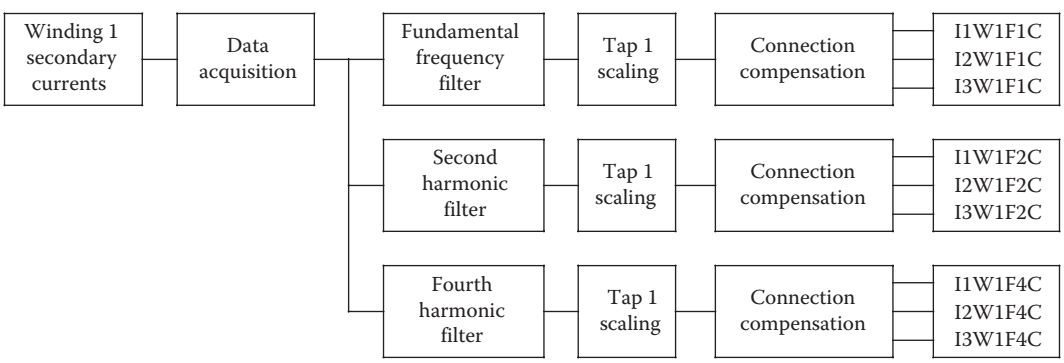

FIGURE 19.12 Data acquisition, filtering, scaling, and compensation for Winding 1 currents.

www.EngineeringEbooksPdf.com

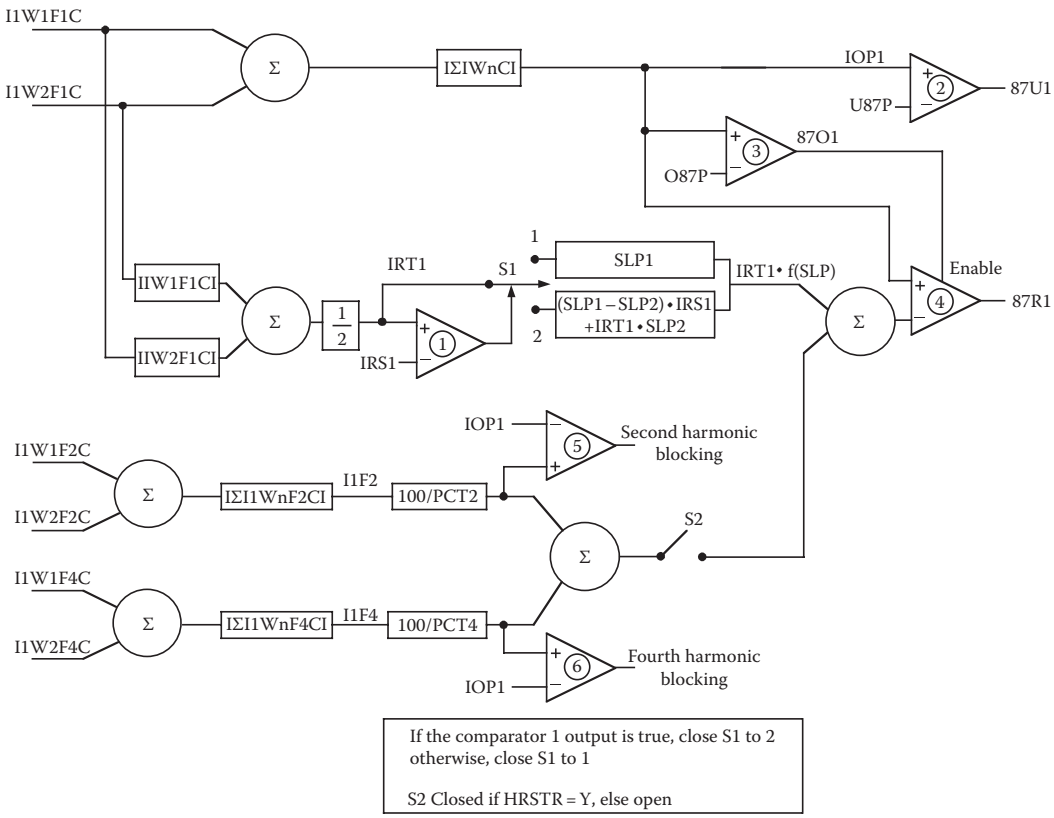

FIGURE 19.13 Even-harmonic restraint, 87R1, and unrestraint, 87U1, differential elements.

with k = 0.5. The magnitudes of the sums of the second-and fourth-harmonic currents represent the second- (I1F2) and fourth- (I1F4) harmonic restraint currents.

Restraint current, IRT1, is scaled to form the restraint quantity IRT1 · f (SLP). Comparator 1 and switch S1 select the slope value as a function of the restraint current to provide a dual-slope percentage characteristic. Harmonic-restraint currents are scaled to form the second- and fourth-harmonic restraint quantities. The scaling factors 100/PCT2 and 100/PCT4 correspond to K_2 and K_4, respectively (Equation 19.19).

Comparator 4 compares the operating current to the sum of the fundamental and harmonic restraint quantities. The comparator asserts for fulfillment of Equation 19.19. Comparator 3 enables Comparator 4 if the operating current, IOP1, is greater than a threshold value, O87P. Assertion of Comparator 3 provides the relay minimum pickup current, I_{PU}. Switch S2 permits enabling or disabling of even-harmonic restraint in the differential element.

Comparators 5 and 6 compare the operating current to the second- and fourth-harmonic restraint quantities, respectively, to generate the second- and fourth-harmonic blocking signals. Comparison of the operating current with the fifth-harmonic restraint quantity (not shown) permits generation of the fifth-harmonic blocking signal (5HB1).

The differential element includes an unrestrained, instantaneous differential overcurrent function. Comparator 2, which compares the operating current, IOP1, with a threshold value, U87P, provides the unrestrained differential overcurrent function.

Figure 19.14 depicts the operating characteristic of the restraint-differential element. The characteristic can be set as either a single-slope, percentage-differential characteristic or as a dual-slope, variable percentage-differential characteristic. Figure 19.14 shows recommended setting values.

www.EngineeringEbooksPdf.com

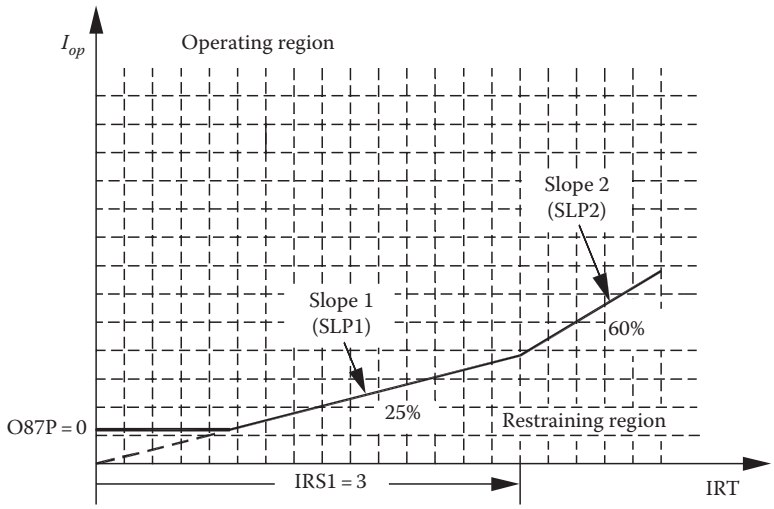

FIGURE 19.14 Percentage restraint differential characteristic.

19.6.3 DC Filtering and Blocking Logic

Figure 19.15 shows a schematic diagram of the dc blocking logic for Element 1. The positive, S^+, and negative, S^-, one-cycle sums of the differential current are formed. Then determine the minimum and the maximum of the absolute values of the two one-cycle sums and calculate the dc ratio, *DCR*, by dividing the minimum one-cycle sum value by the maximum one-cycle sum value. When *DCR* is less than a threshold value of 0.1, the relay issues a blocking signal, DCBL1. Then, the relay blocking condition is according to Equation 19.25.

By defining *DCR* as the ratio of the minimum to the maximum values of the one-cycle sums, an accounting is made for differential currents having positive or negative dc-offset components. In addition, the resulting *DCR* value is normalized.

Relay tripping requires the fulfillment of Equation 19.19 but not Equation 19.13 or 19.25.

19.6.4 Relay Blocking Logic

Figure 19.16 depicts the blocking logic of the differential elements. If the even-harmonic restraint is not in use, switch S1 closes to add even-harmonic blocking to the fifth-harmonic and dc blocking functions. In this case, the differential elements operate in a blocking-only mode. Switches S2, S3, S4, and S5 permit enabling or disabling each of the blocking functions. The output (87BL1) of the differential-element blocking logic asserts when any one of the enabled logic inputs asserts.

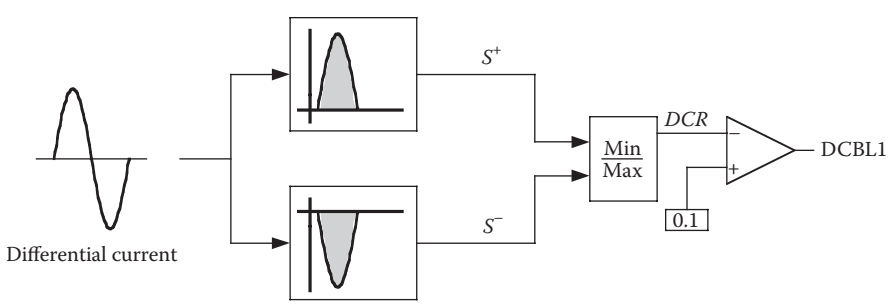

FIGURE 19.15 DC blocking logic.

www.EngineeringEbooksPdf.com

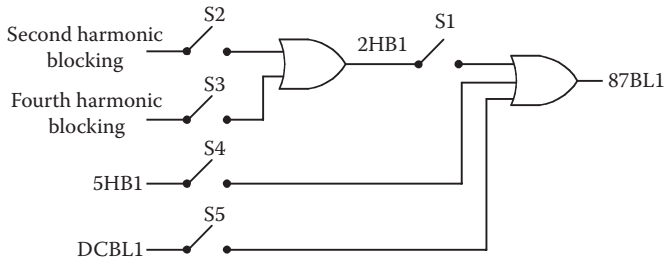

FIGURE 19.16 Differential-element blocking logic.

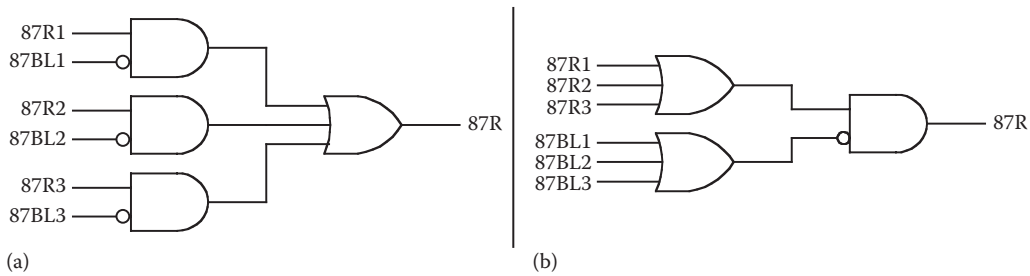

FIGURE 19.17 Differential-relay blocking logic. (a) IHBL = Y and (b) IHBL = N.

Figure 19.17 shows the blocking logic of the differential relay. The relay can be set to an independent blocking mode (IHBL = Y) or a common blocking mode (IHBL = N).

19.7 Differential-Element Performance during Inrush Conditions

Following is a study of the performance of the differential elements for three field cases of transformer energization. These cases are special because they cause some of the traditional differential elements to misoperate.

19.7.1 Case 1

Figure 19.18 shows a transformer energization case while A-phase is faulted and the transformer is not loaded. The transformer is a three-phase, delta-wye-connected distribution transformer; the CT connections are wye at both sides of the transformer.

Figure 19.19 shows the differential Element 1 inrush current; this element uses I_{AB} current. This signal looks like a typical inrush current. The current signal has low second-harmonic content and high dc content compared with the fundamental. Another interesting fact is that this signal also has high third-harmonic content. Figure 19.20 shows the second, third, and fourth harmonic as percentages of fundamental.

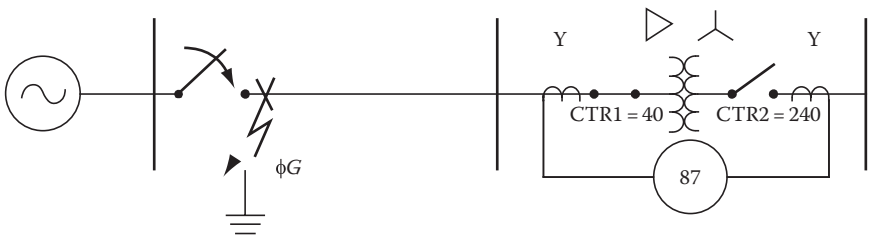

FIGURE 19.18 Transformer energization while A-phase is faulted.

www.EngineeringEbooksPdf.com

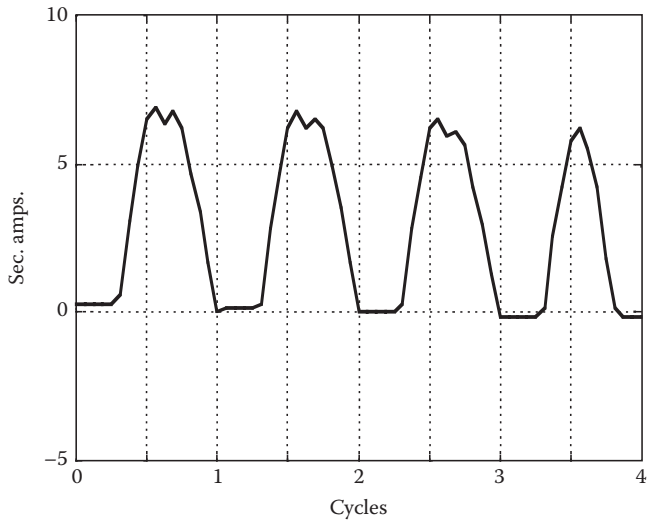

FIGURE 19.19 Element 1 high-side winding current, I_{AB}, recorded while energizing the transformer with an A-phase external fault.

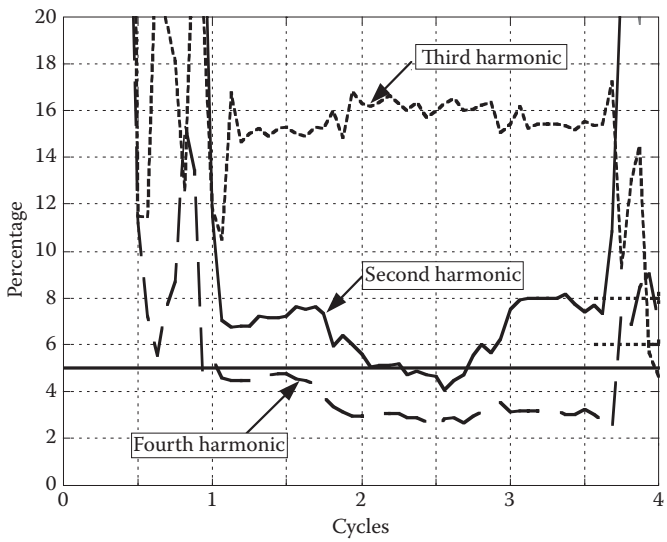

FIGURE 19.20 Second, third, and fourth harmonic as percentages of fundamental of the inrush current where the third-harmonic content is greater than the even-harmonic content.

Notice that the second harmonic drops below 5%. Figure 19.21 shows the dc content as a percentage of fundamental of the inrush current. The dc content is high during the event; this is useful information for adding security to the differential relay.

The differential elements operate as follows:

19.7.1.1 Second- and Fourth-Harmonic Blocking

The low second- and fourth-harmonic content produces misoperation of the differential element that uses independent harmonic blocking.

www.EngineeringEbooksPdf.com

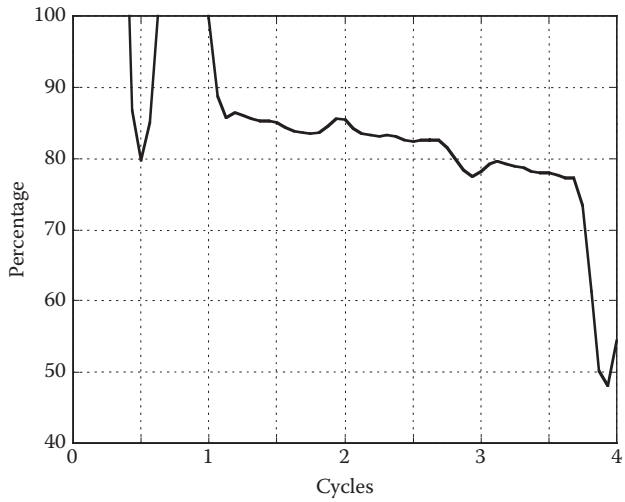

FIGURE 19.21 DC component as percentage of the rms value of fundamental during inrush conditions.

19.7.1.2 All-Harmonic Restraint

The harmonic-restraint relay that uses all harmonics maintains its security because of the high third-harmonic content of the inrush current.

19.7.1.3 Low-Current Detection

The waveform has a low-differential-current section that lasts one-quarter of a cycle each cycle, the minimum time that the element requires for blocking; this element marginally maintains its security.

19.7.1.4 Second- and Fourth-Harmonic Restraint

The low second- and fourth-harmonic content produces misoperation of the differential element that uses independent harmonic restraint.

19.7.1.5 DC-Ratio Blocking

The ratio of the positive to the negative dc value is 0, so this element properly blocks the differential element.

19.7.2 Case 2

This case is similar to Case 1, but it differs in that the transformer is loaded while being energized with reduced A-phase voltage. Figure 19.22 shows the delta–wye distribution transformer; the CT

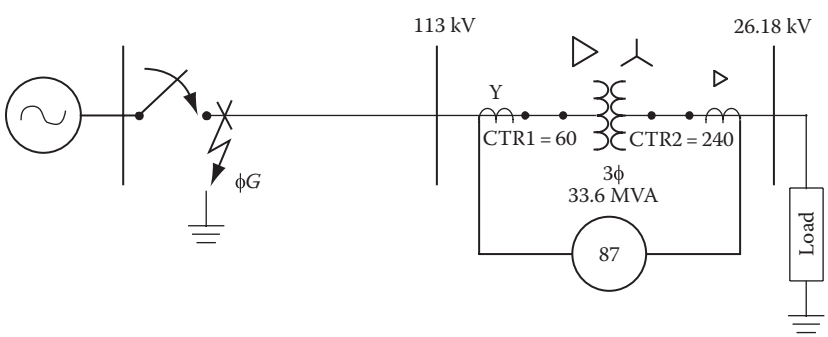

FIGURE 19.22 Transformer energization while A-phase is faulted and the transformer is loaded.

www.EngineeringEbooksPdf.com

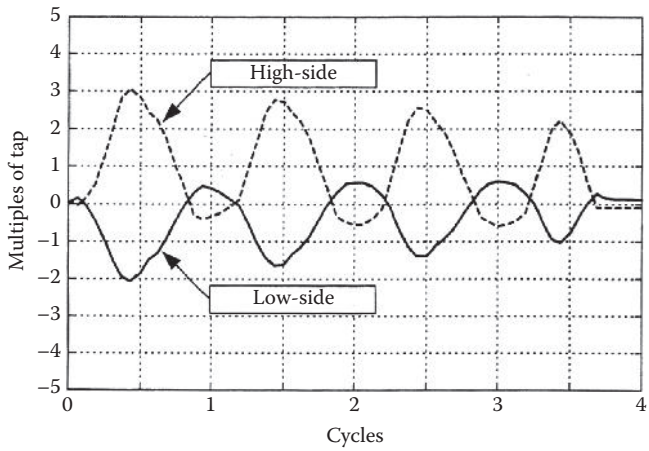

FIGURE 19.23 Element 1 inrush currents from the high- and low-side transformer windings after relay scaling.

connections are wye and delta to compensate for transformer phase shift. In this application, the differential relay does not need to make internal phase-shift compensation.

Figure 19.23 shows the differential Element 1 inrush current from the high- and low-side transformer windings after relay scaling. The two signals are 180° out of phase, but they have different instantaneous values. These values create the differential current shown in Figure 19.24.

Figures 19.25 and 19.26 shows the harmonic and dc content, respectively, of the differential current as a percentage of fundamental. This signal has a second-harmonic content that drops to 7%, while the fourth harmonic drops to approximately 10%. In this case, the even harmonics, especially the fourth, provide information to properly restrain or block the differential element. The dc content also provides information that adds security to the differential element.

The differential elements operate as follows:

19.7.2.1 Second- and Fourth-Harmonic Blocking

The second and fourth harmonics properly block the differential element. Notice that the second-harmonic percentage must be set to 6% for independent harmonic blocking applications.

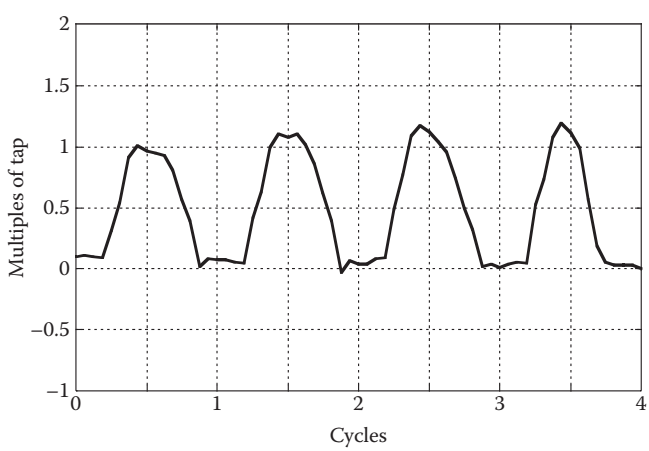

FIGURE 19.24 Differential current during transformer energization with the power transformer loaded.

www.EngineeringEbooksPdf.com

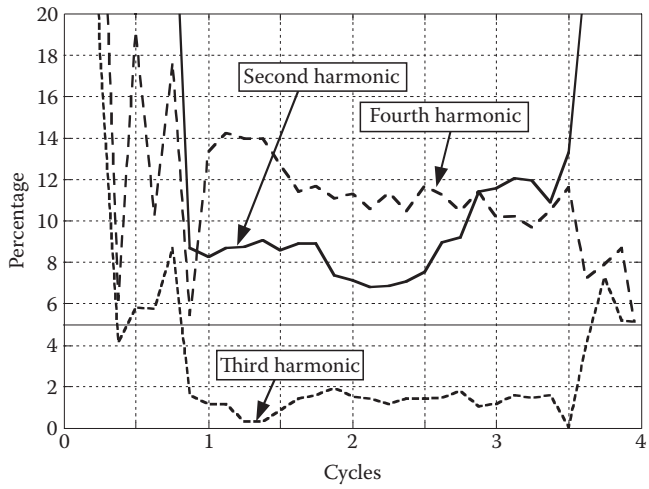

FIGURE 19.25 When the loaded transformer is energized with reduced voltage, the fourth harmonic provides information to restrain or block the differential element.

FIGURE 19.26 DC content of the differential current for Case 2.

19.7.2.2 All-Harmonic Restraint

The harmonic-restraint relay that uses all harmonics maintains its security because of the even-harmonic content of the signal.

19.7.2.3 Low-Current Detection

The waveform has a low-differential-current section that lasts longer than one-quarter cycle, so this logic properly blocks the differential element.

19.7.2.4 Second- and Fourth-Harmonic Restraint

The even-harmonic content of the signal restrains the differential relay from tripping.

www.EngineeringEbooksPdf.com

19.7.2.5 DC-Ratio Blocking

The ratio of the positive to the negative dc value is close to 0 at the beginning of the event and increases to values greater than 0.1, so this element only blocks at the beginning of the event.

19.7.3 Case 3

Figure 19.27 shows a field case of the energization during commissioning of a three-phase, 180 MVA, 230/138 kV autotransformer. The autotransformer connection is wye–wye; the CTs are connected in delta at both sides of the autotransformer.

Figure 19.28 shows the relay secondary currents from the autotransformer high side. These currents result from autotransformer energization with the low-side breaker open. The currents are typical inrush waves with a relatively small magnitude. Notice that the signal low-current intervals last less than one-quarter cycle.

Figure 19.29 shows the harmonic content of the inrush current. We can see that the inrush current has a relatively small second-harmonic percentage, which drops to approximately 9%.

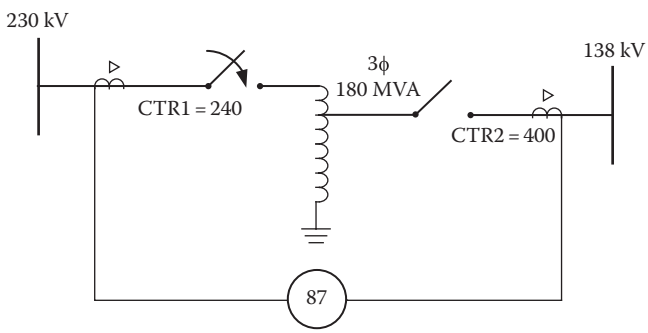

FIGURE 19.27 Transformer energization during commissioning.

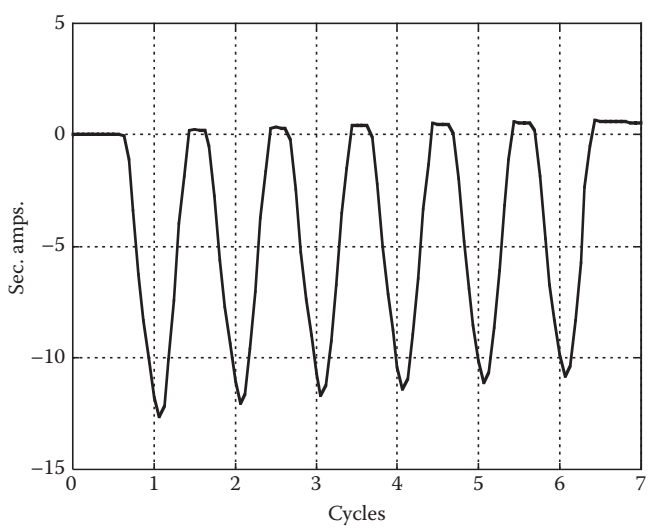

FIGURE 19.28 Inrush current with low-current intervals lasting less than one-quarter cycle.

www.EngineeringEbooksPdf.com

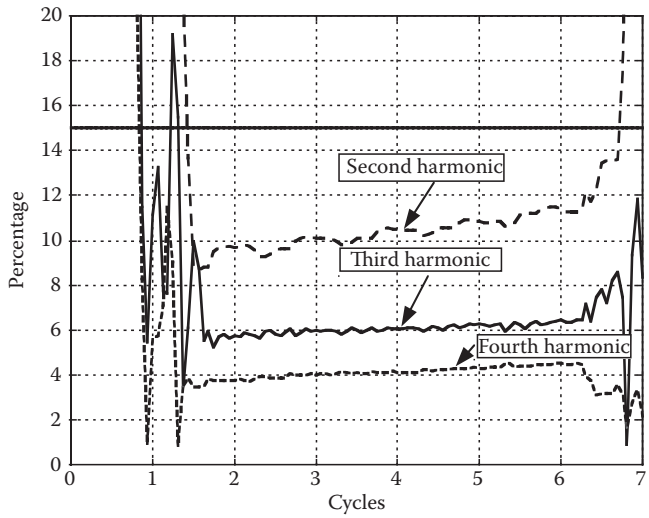

FIGURE 19.29 Second-harmonic percentage drops to approximately 9%.

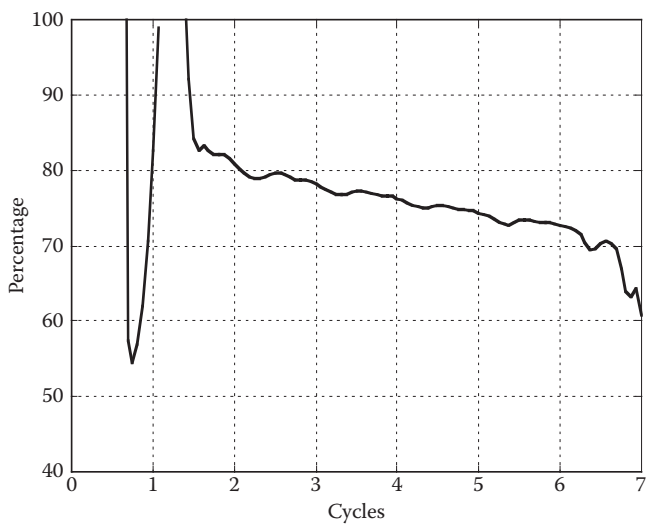

FIGURE 19.30 DC content of the differential current for Case 3.

As in previous cases, Figure 19.30 shows that the dc content of the inrush current is high during the event.

All differential elements except the low-current detector operate correctly for this case. The low-current zone in this case lasts less than the one-quarter cycle required to determine blocking conditions.

Table 19.3 summarizes the performance of the different inrush-detection methods discussed earlier.

The all-harmonic restraint method performs correctly for all three cases, as seen in Table 19.3. This method sacrifices relay dependability during symmetrical CT saturation conditions. Combining the even-harmonic restraint method and the dc-ratio blocking method provides a good compromise of speed and reliability.

www.EngineeringEbooksPdf.com

TABLE 19.3 Inrush Detection Methods Performance during Inrush Conditions

Method	Case 1	Case 2	Case 3
Second- and fourth-harmonic blocking	☒ Low even-harmonic content	☑ Second-harmonic setting 6%	☑ Second-harmonic setting 8%
All-harmonic restraint	☑ High third-harmonic content	☑ Even-harmonic content	☑ Harmonic content
Low-current detection	☑ Low-current interval = one-quarter cycle	☑ Low-current interval > one-quarter cycle	☒ Low-current interval < one-quarter cycle
Even-harmonic restraint	☒ Low even-harmonic content	☑ Even-harmonic content	☑ Even-harmonic content
DC-ratio blocking	☑ DC ratio = 0	☑ DC ratio > 0.1 after one-cycle	☑ DC ratio = 0

Note: ☑ = Correct operation; ☒ = Misoperation.

19.8 Conclusions

1. Most transformer differential relays use the harmonics of the operating current to distinguish internal faults from magnetizing inrush or overexcitation conditions. The harmonics can be used to restrain or to block relay operation. Harmonic-restraint and -blocking methods ensure relay security for a very high percentage of inrush and overexcitation cases. However, these methods fail for cases with very low harmonic content in the operating current.
2. Common harmonic restraint or blocking increases differential-relay security, but it could delay relay operation for internal faults combined with inrush currents in the nonfaulted phases.
3. Waveshape-recognition techniques represent another alternative for discriminating internal faults from inrush conditions. However, these techniques fail to identify transformer overexcitation conditions.
4. An improved approach for transformer protection that combines harmonic-restraint and -blocking methods with a waveshape-recognition technique provides added security to the independent harmonic-restraint element without sacrificing dependability. This new method uses even harmonics for restraint, plus dc component and fifth harmonic for blocking.
5. Using even-harmonic restraint ensures security for inrush currents with low second-harmonic content and maintains dependability for internal faults with CT saturation. The use of fifth-harmonic blocking guarantees an invariant relay response to overexcitation. Using dc-offset blocking ensures security for inrush conditions with very low total harmonic distortion.

References

1. Klingshirn, E.A., Moore, H.R., and Wentz, E.C., Detection of faults in power transformers, *AIEE Trans.*, 76, 87–95, 1957.
2. Madill, J.T., Typical transformer faults and gas detector relay protection, *AIEE Trans.*, 66, 1052–1060, 1947.
3. Bean, R.L. and Cole, H.L., A sudden gas pressure relay for transformer protection, *AIEE Trans.*, 72, 480–483, 1953.
4. Monseth, I.T. and Robinson, P.H., *Relay Systems: Theory and Applications*, McGraw Hill, New York, 1935.
5. Sleeper, H.P., Ratio differential relay protection, *Electrical World*, 827–831, October 1927.
6. Cordray, R.E., Percentage differential transformer protection, *Electrical Eng.*, 50, 361–363, 1931.

www.EngineeringEbooksPdf.com

7. Cordray, R.E., Preventing false operation of differential relays, *Electrical World*, 160–161, July 25, 1931.
8. Harder, E.L. and Marter, W.E., Principles and practices of relaying in the United States, *AIEE Trans*., 67, 1005–1023, 1948.
9. Kennedy, L.F. and Hayward, C.D., Harmonic-current-restrained relays for differential protection, *AIEE Trans*., 57, 262–266, 1938.
10. Hayward, C.D., Harmonic-current-restrained relays for transformer differential protection, *AIEE Trans*., 60, 377–382, 1941.
11. Mathews, C.A., An improved transformer differential relay, *AIEE Trans*., 73, 645–650, 1954.
12. Sharp, R.L. and Glassburn, W.E., A transformer differential relay with second-harmonic restraint, *AIEE Trans*., 77, 913–918, 1958.
13. Einval, C.H. and Linders, J.R., A three-phase differential relay for transformer protection, *IEEE Trans*., PAS-94, 1971–1980, 1975.
14. Dmitrenko, A.M., Semiconductor pulse-duration differential restraint relay, *Izv. Vysshikh Uchebnykh Zavedenii, Elektromekhanika*, No. 3, 335–339, March 1970 (in Russian).
15. Atabekov, G.I., *The Relay Protection of High Voltage Networks*, Pergamon Press, London, U.K., 1960.
16. Rockefeller, G.D., Fault protection with a digital computer, *IEEE Trans*., PAS-98, 438–464, 1969.
17. Wilkinson, S.B., Transformer differential relay, U.S. Patent 5627712, May 6, 1997.
18. Hayward, C.D., Prolonged inrush currents with parallel transformers affect differential relaying, *AIEE Trans*., 60, 1096–1101, 1941.
19. Blume, L.F., Camilli, G., Farnham, S.B., and Peterson, H.A., Transformer magnetizing inrush currents and influence on system operation, *AIEE Trans*., 63, 366–375, 1944.
20. Specht, T.R., Transformer magnetizing inrush current, *AIEE Trans*., 70, 323–328, 1951.
21. AIEE Committee Report, Report on transformer magnetizing current and its effect on relaying and air switch operation, *AIEE Trans*., 70, 1733–1740, 1951.
22. Sonnemann, W.K., Wagner, C.L., and Rockefeller, G.D., Magnetizing inrush phenomena in transformer banks, *AIEE Trans*., 77, 884–892, 1958.
23. Berdy, J., Kaufman, W., and Winick, K., A dissertation on power transformer excitation and inrush characteristics, presented at *Symposium on Transformer Excitation and Inrush Characteristics and Their Relationship to Transformer Protective Relaying*, Houston, TX, 1976.
24. Zocholl, S.E., Guzmán, A., and Hou, D., Transformer modeling as applied to differential protection, presented at *22nd Annual Western Protective Relay Conference*, Spokane, WA, 1995.
25. Cooper Power Systems, *Electric Power System Harmonics: Design guide, Cooper Power Systems*, Bulletin 87011, Franksville, WI, 1990.
26. Waldron, J.E. and Zocholl, S.E., Design considerations for a new solid-state transformer differential relay with harmonic restraint, presented at *Fifth Annual Western Protective Relay Conference*, Sacramento, CA, 1978.
27. Marshall, D.E. and Langguth, P.O., Current transformer excitation under transient conditions, *AIEE Trans*., 48, 1464–1474, 1929.
28. Wentz, E.C. and Sonnemann, W.K., Current transformers and relays for high-speed differential protection with particular reference to offset transient currents, *AIEE Trans*., 59, 481–488, 1940.
29. Concordia, C. and Rothe, F.S., Transient characteristics of current transformers during faults, *AIEE Trans*., 66, 731–734, 1947.
30. IEEE Power Engineering Society, *Transient Response of Current Transformers*, Special Publication 76 CH 1130–4 PWR, Institute of Electrical and Electronics Engineers, Piscataway, NJ, 1976.
31. IEEE, *Guide for the Application of Current Transformers used for Protective Relaying Purposes*, IEEE C37.110–1996, Institute of Electrical and Electronics Engineers, Piscataway, NJ, 1996.
32. Sykes, J.A., A new technique for high speed transformer fault protection suitable for digital computer implementation, IEEE Paper No. C72 429–9, presented at *Power Engineering Society Summer Meeting*, San Francisco, CA, 1972.

www.EngineeringEbooksPdf.com

33. Thorp, J.S. and Phadke, A.G., A microprocessor-based, voltage-restrained, three-phase transformer differential relay, presented at *Proceedings of the Southeastern Symposium on System Theory*, Blacksburg, VA, April 1982, pp. 312–316.
34. Thorp, J.S. and Phadke, A.G., A new computer based, flux restrained, current differential relay for power transformer protection, *IEEE Trans*., PAS-102, 3624–3629, 1983.
35. Inagaki, K., Higaki, M., Matsui, Y., Kurita, K., Suzuki, M., Yoshida, K., and Maeda, T., Digital protection method for power transformers based on an equivalent circuit composed of inverse inductance, *IEEE Trans. Power Deliv.*, 3, 1501–1510, 1998.
36. General Electric Co., Transformer differential relay with percentage and harmonic restraint types BDD 15B, BDD16B, Document GEH-2057F, GE Protection and Control, Malvern, PA.
37. Bertula, G., Enhanced transformer protection through inrush-proof ratio differential relays, *Brown Boveri Rev.*, 32, 129–133, 1945.
38. Giuliante, A. and Clough, G., Advances in the design of differential protection for power transformers, presented at *1991 Georgia Tech. Protective Relaying Conference*, Atlanta, GA, 1991, pp. 1–12.
39. Hegazy, M., New principle for using full-wave rectifiers in differential protection of transformers, *IEE Proc*., 116, 425–428, 1969.
40. Dmitrenko, A.M., The use of currentless pauses for detuning differential protection from transient imbalance currents, *Elektrichestvo*, No. 1, 55–58, January 1979 (in Russian).
41. Robertson, D., Ed., *Power System Protection Reference Manual—Reyrolle Protection*, Oriel Press, London, U.K., 1982.
42. Edgeley, R.K. and Hamilton, F.L., The application of transductors as relays in protective gear, *IEE Proc*., 99, 297, 1952.
43. Michelson, E.L., Rectifier relay for transformer protection, *AIEE Trans*., 64, 252–254, 1945.
44. Podgornyi, E.V. and Ulianitskii, E.M., A comparison of principles for detuning differential relays from transformer inrush currents, *Elektrichestvo*, No. 10, 26–32, October 1969 (in Russian).

www.EngineeringEbooksPdf.com

20

Causes and Effects of Transformer Sound Levels

20.1 Transformer Sound Levels **20**-1
Sound Pressure Level • Perceived Loudness • Sound Power • Sound Intensity Level • Relationship between Sound Intensity and Sound Pressure Level

20.2 Sound-Energy Measurement Techniques **20**-4
Sound-Pressure-Level Measurement • Sound-Intensity Measurements

20.3 Sources of Sound in Transformers **20**-5
Core Noise • Load Noise • Fan and Pump Sound

20.4 Sound Level and Measurement Standards for Transformers **20**-7
Transformer Connections during Test • Principal Radiating Surface for Measurements • Prescribed Contour Location for Measurements • Measuring Positions on Prescribed Contour • Sound-Pressure-Level Measurements • Sound-Intensity Measurements • Calculation of Sound Power Level • Sound-Pressure-Level Calculations at Far Field Receiver Locations

20.5 Factors Affecting Sound Levels in Field Installations **20**-11
Load Power Factor • Internal Regulation • Load Current and Voltage Harmonics • DC Magnetization • Acoustical Resonance

Bibliography **20**-13

Jeewan L. Puri
Transformer Solutions

In many cities today, there are local ordinances specifying maximum allowable sound levels at commercial and residential property lines. Consequently, the sound energy radiated from transformers has become a factor of increasing importance to the neighboring residential areas. It is therefore appropriate that a good understanding of sound power radiation and its measurement principles be developed for appropriately specifying sound levels in transformers. An understanding of these principles can be helpful in minimizing community complaints regarding the present and future installations of transformers.

20.1 Transformer Sound Levels

An understanding of the following basic principles is necessary to evaluate a sound source to quantify the sound energy.

20.1.1 Sound Pressure Level

The main quantity used to describe a sound is the size or amplitude of the pressure fluctuations at a human ear. The weakest sound a healthy human ear can detect has an amplitude of 20 millionths of a pascal (20 μPa). A pressure change of 20 μPa is so small that it causes the eardrum to deflect a distance

www.EngineeringEbooksPdf.com

less than the diameter of a single hydrogen molecule. Amazingly, the ear can tolerate sound pressures more than a million times higher. Thus, if we measured sound in Pa, we would end up with some quite large, unmanageable numbers. To avoid this, another scale is used—the decibel or dB scale.

The decibel is not an absolute unit of measurement. It is a ratio between a measured quantity and an agreed reference level. The dB scale is logarithmic and uses the hearing threshold of 20 μPa as the reference level. This is defined as 0 dB. A sound pressure level L_p can therefore be defined as:

$$L_p = 10\log\left(\frac{P}{P_0}\right)^2 \tag{20.1}$$

where

L_p is the sound pressure level, dB

P_0 is the reference level = 20 μPa

One useful aspect of the decibel scale is that it gives a much better approximation of the human perception of relative loudness than the pascal scale.

20.1.2 Perceived Loudness

We have already defined sound as a pressure variation that can be heard by a human ear. A healthy human ear of a young person can hear frequencies ranging from 20 Hz to 20 kHz. In terms of sound pressure level, audible sounds range from the threshold of hearing at 0 dB to the threshold of pain, which can be over 130 dB.

Although an increase of 6 dB represents a doubling of the sound pressure, in actuality, an increase of about 10 dB is required before the sound subjectively appears to be twice as loud. The smallest change in sound level we can perceive is about 3 dB.

The subjective or perceived loudness of a sound is determined by several complex factors. One such factor is that the human ear is not equally sensitive at all frequencies. It is most sensitive to sounds between 2 and 5 kHz and less sensitive at higher and lower frequencies.

20.1.3 Sound Power

A source of sound radiates energy, and this results in a sound pressure. Sound energy is the cause. Sound pressure is the effect. Sound power is the rate at which energy is radiated (energy per unit time). The sound pressure that we hear (or measure with a microphone) is dependent on the distance from the source and the acoustic environment (or sound field) in which sound waves are present. This in turn depends on the size of the room and the sound absorption characteristics of its wall surfaces. Therefore the measuring of sound pressure does not necessarily quantify how much noise a machine makes. It is necessary to find the sound power because this quantity is more or less independent of the environment and is the unique descriptor of the noisiness of a sound source.

20.1.4 Sound Intensity Level

Sound intensity describes the rate of energy flow through a unit area. The units for sound intensity are watts per square meter.

Sound intensity also gives a measure of direction, as there will be energy flow in some directions but not in others. Therefore, sound intensity is a vector quantity, as it has both magnitude and direction. On the other hand, pressure is a scalar quantity, as it has magnitude only. Usually we measure the intensity in a direction normal (at 90°) to a specified unit area through which the sound energy is flowing.

www.EngineeringEbooksPdf.com

Sound intensity is measured as the time-averaged rate of energy flow per unit area. At some points of measurements, energy may be traveling back and forth. If there is no net energy flow in the direction of measurement, there will be no net recorded intensity.

Like sound pressure, sound intensity level L_I is also quantified using a dB scale, where the measured intensity I in W/m^2 is expressed as a ratio to a reference intensity level I_0 as follows:

$$L_I = 10\log\left(\frac{I}{I_0}\right) \tag{20.2}$$

where

L_I is the sound intensity level, dB

I_0 is the reference level = 10^{-12} W/m^2

20.1.5 Relationship between Sound Intensity and Sound Pressure Level

For any free progressive wave, there is a unique relation between the mean-square sound pressure and the intensity. This relation at a particular point and in the direction of the wave propagation is described as follows:

$$I = \frac{P_{rms}^2}{\rho c} \tag{20.3}$$

where

I is the sound intensity, W/m^2

P_{rms}^2 is the mean-square sound pressure, (N/m^2)^2, measured at that particular point where I is desired in the free progressive wave

ρc is the characteristic resistance, mks rayls

Note that for air, at T = 20°C and atmospheric pressure = 0.751 m of Hg, ρc = 406 mks rayls. This value does not change significantly over generally encountered ambient temperature and atmospheric pressure conditions.

As described in Equation 20.2, sound intensity level, in decibels is:

$$L_I = 10\log\left(\frac{I}{I_0}\right)$$

where I is the sound intensity (power passing in a specified direction through a unit area), W/m^2.

Combining the above equations, the sound intensity level can be expressed as:

$$L_I = 10\log\left[\frac{(P_{rms}^2/\rho c)}{I_0}\right] = 10\log\left(\frac{P_{rms}}{P_0}\right)^2 + 10\log\left[\frac{(P_0^2/\rho c)}{I_0}\right] \tag{20.4}$$

From this expression, L_I can be defined as follows:

$$L_I = L_p - 10\log K \tag{20.5}$$

where K is the constant = $I_0 \times \rho c/P_0^2$, which is dependent upon ambient pressure and temperature.

www.EngineeringEbooksPdf.com

By definition,

$$\frac{P_0^2}{I_0} = \frac{(20\times10^{-6})^2}{10^{-12}} = 400\,\text{mks rayls}$$

Note that the quantity 10 log K will equal zero when K = 1 or when ρc equals 400. As described earlier, under commonly encountered temperature and atmospheric conditions, ρc ≈ 400. Therefore, in free field measurements, $L_p \approx L_I$. That is, noise pressure and noise intensity measurement, in free space, yield the same numerical value.

20.2 Sound-Energy Measurement Techniques

Sound level of a source can be measured by directly measuring sound pressure or sound intensity at a known distance. Both of these measurement techniques are quite equivalent and acceptable. In most of the industry worldwide, sound-pressure measurements have been used for quantifying sound levels in transformers. As a result of the recent work completed by CIGRE, sound-intensity measurements are now being incorporated as an alternative in IEC Std. 60076-10.

20.2.1 Sound-Pressure-Level Measurement

A sound-level meter is an instrument designed to respond to sound in approximately the same way as the human ear and to give objective, reproducible measurements of sound pressure level. There are many different sound measuring systems available. Although different in detail, each system consists of a microphone, a processing section and a readout unit.

The microphone converts the sound signal to an equivalent electrical signal. The most suitable type of microphone for sound-level meters is the condenser microphone, which combines precision with stability and reliability. The electrical signal produced by the microphone is quite small. It is therefore amplified by a preamplifier before being processed.

Several different types of processing may be performed on the signal. The signal may pass through a weighting network of filters. It is relatively simple to build an electronic circuit whose sensitivity varies with frequency in the same way as the human ear, thus simulating the equal-loudness contours. This has resulted in three different internationally standardized characteristics termed the A, B, and C weightings. The A-weighting network is the most widely used, since the B and C weightings do not correlate well with subjective tests.

20.2.2 Sound-Intensity Measurements

Until recently, only sound pressure that was dependent on the sound field could be measured. Sound power can be related to sound pressure only under carefully controlled conditions where special assumptions are made about the sound field. Therefore, a noise source had to be placed in specially constructed rooms, such as anechoic or reverberant chambers, to measure sound power levels with the desired accuracy.

Sound intensity, however, can be measured in any sound field. This property allows all the measurements to be done directly in situations where a plurality of sound sources are present. Measurements on any sound source can be made even when all the others are radiating noise simultaneously. Sound intensity measurements are directional in nature and only measure sound energy radiated form a sound source. Therefore, steady background noise makes no contribution to the sound power of the source determined with sound-intensity measurements.

Sound intensity is the time-averaged product of the pressure and particle velocity. A single microphone can measure pressure. However, measuring particle velocity is not as simple. With Euler's linearized

www.EngineeringEbooksPdf.com

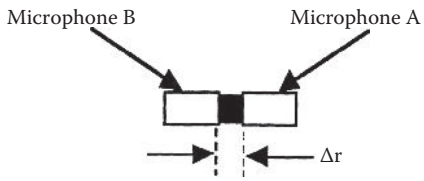

FIGURE 20.1 Measurement of pressure gradient using two closely spaced microphones.

equation, the particle velocity can be related to the pressure gradient (i.e., the rate at which the instantaneous pressure changes with distance).

Euler's equation is essentially Newton's second law applied to a fluid. Newton's second law relates the acceleration given to a mass to the force acting on it. If the force and the mass are known, the acceleration can be found. This can then be integrated with respect to time to find the velocity.

With Euler's equation, it is the pressure gradient that accelerates a fluid of density ρ. With the knowledge of pressure gradient and density of the fluid, the particle acceleration (or deceleration) can be calculated as follows.

$$a = -\frac{1}{\rho}\frac{\partial P}{\partial r} \tag{20.6}$$

where a is the particle deceleration due to a pressure change ∂P in a fluid of density ρ across a distance ∂r.

Integrating Equation 20.6 gives the particle velocity, u, as follows:

$$u = \oint \frac{1}{\rho}\frac{\partial P}{\partial r}\,dt \tag{20.7}$$

It is possible to measure the pressure gradient with two closely spaced microphones facing each other and relate it to the particle velocity using the above equation. With two closely spaced microphones A and B separated by a distance Δr (Figure 20.1), it is possible to obtain a linear approximation of the pressure gradient by taking the difference in their measured pressures, P_A and P_B, and dividing it by the distance Δr between them. This is called a finite-difference approximation.

The pressure-gradient signal must now be integrated to give the particle velocity u as follows:

$$u = -\frac{1}{\rho}\int\left[\frac{(P_A - P_B)}{\Delta r}\right]dt \tag{20.8}$$

Since intensity I is the time-averaged product of pressure P and particle velocity u,

$$I = -\frac{P}{\rho}\int\left[\frac{(P_A - P_B)}{\Delta r}\right]dt \tag{20.9}$$

where $P = (P_A + P_B)/2$.

This is the basic principle of signal processing in sound-intensity-measuring equipment.

20.3 Sources of Sound in Transformers

Unlike cooling-fan or pump noise, the sound radiated from a transformer is tonal in nature, consisting of even harmonics of the power frequency. It is generally recognized that the predominant source of transformer noise is the core. The low frequency, tonal nature of this noise makes it harder to mitigate than the broadband higher frequency noise that comes from the other sources. This is because low

www.EngineeringEbooksPdf.com

frequencies propagate farther with less attenuation. Also, tonal noise can be perceived more acutely than broadband levels, even with high background noise levels. This combination of low attenuation and high perception makes tonal noise the dominant problem in the neighboring communities around transformers. To address this problem, most noise ordinances impose penalties or stricter requirements for tonal noise.

Even though the core is the principal noise source in transformers, the load noise, which is primarily caused by the electromagnetic forces in the windings, can also be a significant influence in low-sound-level transformers. The cooling equipment (fans and pumps) noise typically dominates the very low-and very high-frequency ends of the sound spectrum, whereas the core noise dominates in the intermediate range of frequencies between 100 and 600 Hz. These sound-producing mechanisms can be further characterized as follows.

20.3.1 Core Noise

When a strip of iron is magnetized, it undergoes a very small change in its dimensions (usually only a few parts in a million). This phenomenon is called magnetostriction. The change in dimension is independent of the direction of magnetic flux; therefore, it occurs at twice the line frequency. Because the magnetostriction curve is nonlinear, higher harmonics of even order also appear in the resulting core vibration at higher induction levels (above 1.4 T).

Flux density, core material, core geometry, and the wave form of the excitation voltage are the factors that influence the magnitude and frequency components of the transformer core sound levels. The mechanical resonance in transformer mounting structure as well as in core and tank walls can also have a significant influence on the magnitude of transformer vibrations and, consequently, on the acoustic noise generated.

20.3.2 Load Noise

Load noise is caused by vibrations in tank walls, magnetic shields, and transformer windings due to the electromagnetic forces resulting from leakage fields produced by load currents. These electromagnetic forces are proportional to the square of the load currents.

The load noise is predominantly produced by axial and radial vibration of transformer windings. However, marginally designed magnetic shielding can also be a significant source of sound in transformers. A rigid design for laminated magnetic shields with firm anchoring to the tank walls can greatly reduce their influence on the overall load sound levels. The frequency of load noise is usually twice the power frequency. An appropriate mechanical design for laminated magnetic shields can be helpful in avoiding resonance in the tank walls. The design of the magnetic shields should take into account the effects of overloads to avoid saturation, which would cause higher sound levels during such operating conditions.

Studies have shown that except in very large coils, radial vibrations do not make any significant contribution to the winding noise. The compressive electromagnetic forces produce axial vibrations and thus can be a major source of sound in poorly supported windings. In some cases, the natural mechanical frequency of winding clamping systems may tend to resonate with electromagnetic forces, thereby severely intensifying the load noise. In such cases, damping of the winding system may be required to minimize this effect.

The presence of harmonics in load current and voltage, most especially in rectifier transformers, can produce vibrations at twice the harmonic frequencies and thus a sizeable increase in the overall sound level of a transformer.

Through several decades, the contribution of the load noise to the total transformer noise has remained moderate. However, in transformers designed with low induction levels and improved core designs for complying with low sound-level specifications, the load-dependent winding noise of electromagnetic

www.EngineeringEbooksPdf.com

origin can become a significant contributor to the overall sound level of the transformer. In many such cases, the sound power of the winding noise is only a few dB below that of the core noise.

20.3.3 Fan and Pump Sound

Power transformers generate considerable heat because of the losses in the core, coils, and other metallic structural components of the transformer. This heat is removed by fans that blow air over radiators or coolers. Noise produced by the cooling fans is usually broadband in nature. Cooling fans usually contribute more to the total noise for transformers of smaller ratings and for transformers that are operated at lower levels of core induction. Factors that affect the total fan noise output include tip speed, blade design, number of fans, and the arrangement of the radiators.

20.4 Sound Level and Measurement Standards for Transformers

In NEMA Publication TR-1, Tables 02 through 04 list standard sound levels for liquid-filled power, liquid-filled distribution, and dry-type transformers. These sound-level requirements must be met unless special lower sound levels are specified by the customer.

The present sound-level measurement procedures as described in IEEE standards C57.12.90 and C57.12.91 specify that the sound-level measurements on a transformer shall be made under no-load conditions. Sound-pressure measurements shall be made to quantify the total sound energy radiated by a transformer. Sound-intensity measurements have already been incorporated into IEC Sound Level Measurement Standard 60076-10 as an acceptable alternative. It is anticipated that this method will be adopted in the IEEE standards also in the near future. The following is a brief description of the procedures used for this determination.

20.4.1 Transformer Connections during Test

This test is performed by exciting one of the transformer windings at rated voltage of sinusoidal wave shape at rated frequency while all the other windings are open circuited. The tap changer (if any) is at the rated-voltage tap position. In some cases (e.g., transformers equipped with reactor-type on-load tap changers), a tap position other than the rated may be used if the transformer produces maximum sound levels at this position.

20.4.2 Principal Radiating Surface for Measurements

The principal radiating surface is that from which the sound energy is emanating toward the receiver locations. The location of the radiating surface is determined based on the proximity of the cooling equipment to the transformer.

For transformers with no cooling equipment (or with cooling equipment mounted less than 3 m from the transformer tank) or dry-type transformers with enclosures provided with cooling equipment (if any) inside the enclosure, the principal radiating surface is obtained by taking the vertical projection of a string contour surrounding the transformer and its cooling equipment (if any), as shown in Figure 20.2. The vertical projection begins at the tank cover and terminates at the base of the transformer.

Separate radiating surfaces for the transformer and its cooling equipment are determined if the cooling equipment is mounted more than 3 m from the transformer tank. The principal radiating surface for the cooling equipment is determined by taking the vertical projection of the string perimeter surrounding the cooling equipment, as shown in Figure 20.3. The vertical projection begins at the top of the cooling structure and terminates at its base.

www.EngineeringEbooksPdf.com

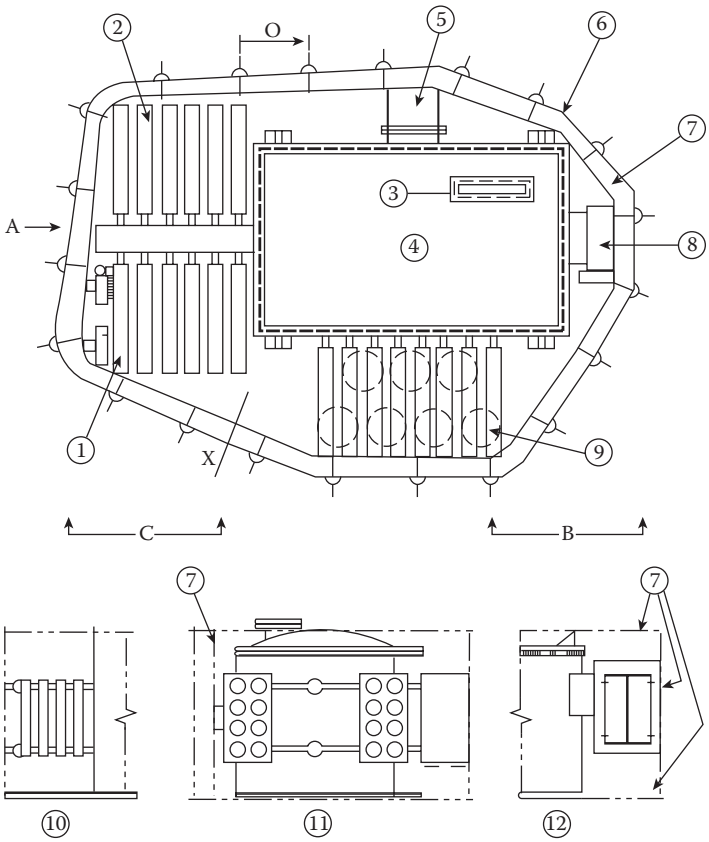

FIGURE 20.2 Typical microphone positions for sound measurement on transformers having cooling auxiliaries mounted either directly on the tank or on a separate structure spaced <3 m from the principal radiating surface of the main tank. 1. Horizontal forced air. 2. Natural air. 3. Turcet. 4. Transformer tank. 5. Cable box. 6. Prescribed contour. 7. Principal handling surface. 8. On-load tap-changer. 9. Vertical forced air. 10. View C. 11. View A. 12. View S. (From IEC60076-10, *Power Transformers Part 10: Determination of Sound Levels*, International Electrotechnical Commission 3, Geneva, Switzerland, 2001. With permission.)

20.4.3 Prescribed Contour Location for Measurements

All sound-level measurements are made on a prescribed contour located 0.3 m away from the radiating surface. The location of this contour depends on the radiating surface as determined by the proximity of the cooling equipment to the transformer, as shown in Figures 20.2 and 20.3. The location of the prescribed contours above the base of the transformer shall be at half the tank height for transformer tanks <2.5 m high or at one-third and two-thirds the tank height for transformer tanks >2.5 m high.

20.4.4 Measuring Positions on Prescribed Contour

The first microphone position is located on the prescribed contour opposite the main tank drain valve. Proceeding in a clockwise direction (as viewed from the top of the transformer) additional measuring positions on the prescribed contour are located no more than 1 m apart.

The minimum number of measurements as stipulated in IEEE C57.12.90 or IEEE C57.12.91 for North American practice are taken on each prescribed contour. These standards specify that sound-level measurements shall be made with and without the cooling equipment in operation. IEC 60076-10 standard should be consulted for European practices, which are slightly different.

www.EngineeringEbooksPdf.com

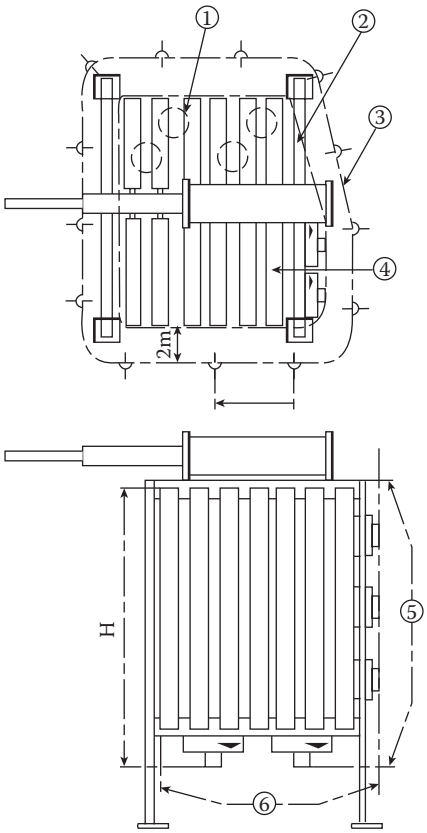

FIGURE 20.3 Typical microphone positions for sound measurement on cooling auxiliaries mounted on a separate structure spaced ≥3 m from the principal radiating surface of the transformer. 1. Vertical forced air. 2. Principal radiating surface. 3. Prescribed contour. 4. Horizontal forced air. 5. Horizontal boundaries of principal radiating surface. 6. Vertical boundaries of principal radiating surface. (From IEC60076-10, *Power Transformers Part 10: Determination of Sound Levels*, International Electrotechnical Commission 3, Geneva, Switzerland, 2001. With permission.)

20.4.5 Sound-Pressure-Level Measurements

A-weighted sound-pressure-level measurements are the most commonly used method for determining sound levels in transformers. Sound pressure measurements are quite sensitive to the ambient sound levels on the test floor. Therefore, appropriate corrections for the ambient sound level and reflected sound from the surrounding surfaces must also be quantified to determine the true sound level of the transformer.

It is recommended that acceptable ambient sound level conditions should be met for obtaining reliable measurements on transformers. For this reason, industry standards specify that A-weighted ambient sound pressure levels must be measured immediately before and after the measurements on the transformer. The ambient noise level readings are taken at each microphone position on the prescribed contours with the transformer and cooling equipment (if any) de-energized. These measurements are used to correct the measurements made on the transformer. The magnitude of this correction depends on the difference between the ambient and the transformer sound levels. This difference should not be less than 5 dB for a valid measurement. No correction is necessary if the ambient sound level is more than 10 dB lower than the transformer sound level.

www.EngineeringEbooksPdf.com

From the measured sound-pressure levels, L_{pAi}, at each microphone position on the prescribed contour, an A-weighted average sound-pressure level, L_{pA}, can be calculated using Equation 20.10:

$$L_{pA} = 10\log\left[\frac{1}{N}\sum_{i=1}^{N} 10^{.1L_{pAi}}\right] - K \text{ dB} \tag{20.10}$$

where

L_{pA} is A-weighted average sound-pressure level, dB (reference = 20 μPa)

L_{pAi} is A-weighted sound-pressure level measured at the ith position and corrected for the ambient noise level, dB (reference = 20 μPa)

N is the total number of measuring positions on the prescribed contour

K is the environmental correction for the influence of reflected sound and ambient sound level, dB (IEEE and IEC standards should be consulted for details)

20.4.6 Sound-Intensity Measurements

The equipment for these measurements has only recently emerged in the industry. By definition, the A-weighted sound-intensity measurements provide a measure of sound power radiated in watts through a unit area per unit time. This type of measurement yields a vector quantity that represents the sound energy radiated in a direction normal to the principal radiating surface of the transformer.

The noise-intensity measuring probes use two matched microphones that respond to sound pressure so that the readings taken by them does not differ by more than 1.5 dB at any location.

From the measured sound intensity levels, L_{IAi}, at each position of the prescribed contour, an A-weighted average sound intensity level in decibels, L_{IA}, can be calculated using Equation 20.11:

$$L_{IA} = 10\log\left[\frac{1}{N}\sum_{i=1}^{N} 10^{.1L_{ia}}\right] \text{dB} \tag{20.11}$$

where

L_{IA} is A-weighted average sound-intensity level, dB (reference = 10^{-12} W/m^2)

L_{ia} is A-weighted sound-intensity level measured at the ith position for the ambient noise level, (reference = 10^{-12} W/m^2)

N is the total number of measuring positions on the prescribed contour

Unlike sound pressure, the noise-intensity measurements are not influenced by the ambient noise level, provided that the ambient noise remains constant as the measurements are taken around the prescribed contour. Under such conditions, noise-intensity measurements can be made in ambient sound level even higher than the sound level of the transformer. For this reason, this type of measurement is especially suitable for transformers designed for very low noise levels.

It should be recognized that, at this time, the transformer industry's experience in sound intensity measurement is rather limited. Actual measurements published in CIGRE publications have demonstrated that the reliability of the sound-intensity measurements depends on the difference ΔL between the average sound intensity and pressure measurements made by the same probes. This work suggests that for optimum results, ΔL should not be more than 8 dB.

20.4.7 Calculation of Sound Power Level

It is necessary to calculate sound pressure levels at property lines located away from the transformer in order to demonstrate compliance with the local ordinances.

www.EngineeringEbooksPdf.com

Sound power level provides a measure of the total sound energy radiated by a transformer. With this quantity, the sound pressure levels at any desired distance (outside the prescribed contour) from the transformer can be calculated.

Since sound-pressure or sound-intensity measurements yield the same numerical result, the following equations can be used to calculate sound power levels in decibels from the measured sound-pressure or sound-intensity levels.

$$L_{WA} = L_{IA} + 10\log(S) \tag{20.12}$$

or

$$L_{WA} = L_{pA} + 10\log(S) \tag{20.13}$$

where

S is area of the radiating surface, m^2

$L_{WA} = 10 \log (W/W_0)$ = A-weighted sound power level, dB ($W_0 = 10^{-12}$ W)

L_{pA} is A-weighted average sound pressure level, dB (reference = 20 μPa)

L_{IA} is A-weighted average sound intensity level, dB (reference = 10^{-12} W/m^2)

The calculation of effective radiating surface area S is also a function of the distance at which the sound measurements were made. IEEE or IEC standards can be consulted for details.

20.4.8 Sound-Pressure-Level Calculations at Far Field Receiver Locations

Sound-level requirements at a specific receiver location in the far field play a major role in specifying sound levels for transformers.

The following basic method can be considered for estimating transformer sound pressure levels for simple installations. These calculations provide an accurate estimate of transformer noise emissions at distances roughly greater than twice the largest dimension of the transformer.

Given the sound-pressure-level requirement of L_{pD} dB at a distance D from the transformer, the maximum allowable sound power L_W (in watts) for the transformer can be estimated using Equation 20.14:

$$L_W = L_{pD} + 10\log(2\Pi D^2) \tag{20.14}$$

Therefore, the maximum allowable sound-pressure level L_{pT} at the measurement surface near the transformer will be:

$$L_{pT} = L_W - 10\log(\text{measurement surface area}) \tag{20.15}$$

where measurement surface area, m^2 = 1.25 × transformer tank height × measurement contour length.

20.5 Factors Affecting Sound Levels in Field Installations

To ensure repeatability, the factory measurements are made under controlled conditions specified by sound-measurement standards. Every effort is made to maintain core excitation voltage constant and sinusoidal to ensure the presence of a known core induction while making sound-level evaluations in transformers.

The effects of ambient sound levels and reflections must be subtracted from the overall sound-level measurements in order to determine the true sound power of a transformer. Therefore, it is essential that

www.EngineeringEbooksPdf.com

the ambient sound levels are constant and that they are measured accurately. Many times it becomes necessary to make these measurements in a sound chamber, where ambient sound level is very low and the effects of reflecting surfaces can also be eliminated.

The sound-level measurements at the transformer site can be drastically different, depending on its operating conditions. The effects of the following factors should therefore be considered while defining the sound-level requirements for transformers.

20.5.1 Load Power Factor

In the factory, core and winding sound levels are measured separately at rated voltage and full-load current, respectively. These sound levels are produced by core and winding vibrations of twice the power frequency and its even harmonics. It is assumed that these vibrations are in phase with each other, and therefore their power levels are added to predict the overall sound level of the transformer. However, this assumption applies only when the transformer is carrying purely resistive load.

Under actual operating conditions, depending on the power factor of the load, the phase angle between voltage and load current may induce a change in the factory-predicted transformer sound level.

20.5.2 Internal Regulation

The magnitude and the phase angle of the load currents also change the internal voltage drop in the transformer windings. The transformer loading conditions therefore can change the core induction level and significantly influence the core sound levels.

20.5.3 Load Current and Voltage Harmonics

During factory tests, only sinusoidal load current is simulated for measuring winding noise. This noise is produced by magnetic forces that are proportional to the square of the load current. However, harmonic content in the load current has a larger impact on the sound level than might be expected from the amplitude of the harmonic currents alone, since they interact with the power-frequency load current. In such cases, the magnetic force is proportional to the cross product between the power-frequency current and the harmonic current in addition to the force that is proportional to the square of load current and the square of the harmonic current. Thus, the highest contribution to the sound level due to the harmonic current occurs when the product of the load current and the harmonic current reaches the maximum. The resulting audible tones are made up of frequencies of the harmonic current ± the fundamental power frequency.

Current harmonics are a major source of increase in sound levels in HVDC and rectifier transformers. Nonlinear loads cause harmonics in the excitation voltage, resulting in an increase in core sound levels. This influence must be considered when specifying sound level for a transformer.

20.5.4 DC Magnetization

Even a moderate dc magnetization of a transformer core will result in a significant increase in the transformer audible sound level. In addition to increasing the power level of the normal harmonics in the transformer vibrations (i.e., even harmonics of the power frequencies), dc magnetization will add odd harmonic tones to the overall sound level of the transformer.

Modern cores have high remnant flux density. Upon energization, the core sound levels may be as much as 20 dB higher than the factory test value. It is therefore recommended that a transformer should be energized for approximately 6 h before evaluating its sound levels.

Traditionally, circuits like dc feeders to the transportation systems have been a source of dc fields in transformers. However, with the increased used of power electronic equipment in power

www.EngineeringEbooksPdf.com

transmission systems and in the industry, the number of possible sources for dc magnetization is increasing. Geomagnetic storms can also cause severe dc magnetization in transformers connected to long transmission lines.

20.5.5 Acoustical Resonance

Dry-type transformers are most frequently applied inside buildings. In a room with walls of low sound-absorption coefficient, the sound from the transformer will reflect back and forth between walls, resulting in a buildup of sound level in the room.

The number of dBs by which the sound level at the transformer will increase can be approximated using Equation 20.16:

$$\text{dB buildup} = 10\log[1 + 4(1 - a)A_T/(aA_U)] \tag{20.16}$$

where

A_T is the surface area of the transformer
A_U is the area of the reflecting surface
a is the average absorption coefficient of the surfaces

In a room with concrete walls (with an absorption coefficient of 0.01) and with sound-reflecting surface area four times that of the transformer ($A_U/A_T = 4$), the increase in sound level at the transformer can be 20 dB. However, covering the reflecting surfaces of this room with sound-absorbing material with absorption coefficient of 0.3 will reduce this buildup to 5.5 dB.

Sound propagation is affected by many factors, such as atmospheric absorption, interceding barriers, and reflective surfaces. An explanation of these factors is beyond the scope of this text; however, they are mentioned to make the reader aware of their potential influence. If the existing site conditions will influence the sound propagation, the reader is advised to reference textbooks dealing with the subject of acoustic propagation or to consult an expert in conducting more accurate sound-propagation calculations.

Bibliography

Anon, *Measuring Sound*, Brüel & Kjaer, Nerum, Denmark, 1984.

Anon, *Sound Intensity*, Brüel & Kjaer, Nerum, Denmark, 1993.

Beranek, L., Ed., *Noise and Vibration Control*, Institute of Noise Control Engineering, Washington, DC, 1988.

Fanton, J.P. et al., Transformer noise: Determination of sound power level using the sound intensity measurement method, IEC SC 12-WG 12 (April 1990), *Electra*, 144, 1992.

Gade, S., Sound intensity theory, Technical Review No. 3, Brüel & Kjaer, Nerum, Denmark, 1982.

Gade, S., Sound intensity instrumentation and applications, Technical Review No. 4, Brüel & Kjaer, Nerum, Denmark, 1982.

IEC60076-10, *Power Transformers Part 10: Determination of Sound Levels*, International Electrotechnical Commission 3, Geneva, Switzerland, 2001.

IEEE C57.156 (draft 9), IEEE Audible Sound and Vibration Subcommittee Working Group, *Guide for Sound Level Abatement and Determination for Liquid Immersed Power Transformers and Shunt Reactors Rated to be 500 Kva*, Institute of Electrical and Electronics Engineers, Piscataway, NJ, 2008.

Replinger, E., Study of noise emitted by power transformers based on today's viewpoint, CIGRE Paper 12-08, Siemens AG, Transformatorenwerk, Nürnberg, Germany, 1988.

Specht, T.R., Noise levels of indoor transformers, Westinghouse Corporation, Transformer Division, 1955.

Westinghouse Electric Corporation, Bolt Beranek, and Newman Inc., Power transformer noise abatement, ESERC Report EP 9–14, Empire State Electric Energy Research Corporation, New York, 1981.

www.EngineeringEbooksPdf.com

www.EngineeringEbooksPdf.com

21

Transient-Voltage Response of Coils and Windings

21.1 Transient-Voltage Concerns **21**-1
Normal System Operation • Sources and Types of Transient-Voltage Excitation • Addressing Transient-Voltage Performance • Complex Issue to Predict
21.2 Surges in Windings **21**-3
Response of a Simple Coil • Initial Voltage Distribution • Steady-State Voltage Distribution • Transient-Voltage Distribution
21.3 Determining Transient Response **21**-6
History • Lumped-Parameter Model • Frequency-Domain Solution • Solution in Time Domain • Accuracy vs. Complexity
21.4 Resonant Frequency Characteristic **21**-9
Definitions • Impedance vs. Frequency • Amplification Factor
21.5 Inductance Model **21**-12
Definition of Inductance • Transformer Inductance Model • Inductance Model Validity
21.6 Capacitance Model **21**-14
Definition of Capacitance • Series and Shunt Capacitance • Equivalent Capacitance for Disk Windings • Initial Voltage Distribution
21.7 Loss Model **21**-17
Copper Losses • Core Losses • Dielectric Losses
21.8 Winding Construction Strategies **21**-20
Design • Core Form • Shell Form • Proof of Design Concept • Standard Winding Tests • Design Margin • Insulation Coordination • Additional System Considerations
21.9 Models for System Studies **21**-24
Model Requirements • Reduced Order Model
References **21**-25

Robert C. Degeneff
Utility Systems Technology, Inc.

21.1 Transient-Voltage Concerns

21.1.1 Normal System Operation

Transformers are used in systems to change power from one voltage to another or to provide electrical isolation. This is often driven by a desire to optimize the overall system performance, for example, its economics, reliability, and/or electrical characteristics. To achieve these system goals, a purchaser must specify and a designer must configure the transformer to meet a desired impedance, voltage and power rating, thermal characteristic, short-circuit strength, sound level, physical size, and voltage withstand capability. Obviously, many of these goals will produce requirements that are in conflict, and prudent

www.EngineeringEbooksPdf.com

compromise is required. Failure to achieve an acceptable characteristic for any of these makes the overall transformer design unacceptable. Transformer characteristics and the concomitant design process are outlined in Blume et al. (1951), Bean et al. (1959), MIT (1943), and Franklin (1983).

Normally, a transformer operates under steady voltage excitation. Occasionally, a transformer (in fact, all electrical equipment) experiences dynamic and/or transient overvoltages. Often, it is these infrequent transient voltages that establish the design constraints for the transformer's insulation system and produce far-reaching requirements on the overall equipment design. The transformer must be configured to withstand any abnormal voltages contained in the design specification and realistically expected to be seen in service. Often, these constraints have great impact on other design issues and, as such, have significant effect on the overall transformer cost, performance, and configuration. In recent years, engineers have explored the adverse effect of transient voltages on the reliability of transformers (Working group 05, 1983; Kogan et al., 1988, 1990) and found it to be a major cause of transformer failure.

21.1.2 Sources and Types of Transient-Voltage Excitation

The voltages applied to a transformer's terminals can be broadly classed as steady state or "transient." The "transient" voltages a transformer experiences are commonly classified as dynamic, transient, and very fast transients.

The majority of voltages a transformer experiences during its operational life are steady state, for example, the voltage is within ±10% of nominal, and the frequency is within 1% of rated. As power quality issues grow, the effect of harmonic voltages and currents on performance becomes more of an issue. These harmonics are effectively reduced magnitude, steady-state voltages, and currents at harmonic frequencies (typically 2nd to the 50th). These are addressed in great detail in reference IEEE Std. 519 (1999). Strictly speaking, all other voltage excitations are transients, for example, dynamic, transient, and very fast transient voltages.

Dynamic voltages refer to relatively low frequency (60–1500 Hz), damped oscillatory voltage. Magnitudes routinely observed are from one to three times the system's peak nominal voltage. Transient voltage refers to the class of excitation caused by events like lightning surges, switching events, and line faults causing voltages of the chopped waveform (Degeneff et al., 1982). Normally, these are aperiodic waves. Occasionally, the current chopping of a vacuum breaker will produce transient periodic excitation in the 10–200 kHz range (Greenwood, 1994). The term very fast transient encompasses voltage excitation with rise times in the range of 50–100 ns and frequencies from 0.5 to 30 MHz. These types of voltages are encountered in gas-insulated stations. The voltages produced within the transformer-winding structure by the system is a part of the problem that must be addressed and understood if a successful insulation design is to be achieved (Narang et al., 1998). Since transient voltages affect system reliability, and that, in turn, system safety and economics, a full understanding of the transient characteristic of a transformer is warranted.

21.1.3 Addressing Transient-Voltage Performance

Addressing the issue of transient-voltage performance can be divided into three activities: recognition, prediction, and mitigation. By 1950, over 1000 papers had been written to address these issues (Abetti, 1959a,b, 1962, 1964). The first is to appreciate that transient-voltage excitation can produce equipment responses different than one would anticipate at first glance. For example, the addition of more insulation around a conductor may in fact make the transient-voltage distribution worse and the insulation integrity of the design weaker. Another example would be the internal voltage amplification a transformer experiences when excited near one of its resonant frequencies. The transient-voltage distribution is a function of the applied voltage excitation and the transformer's physical shape and material content. The capability of the winding to withstand the transient voltage is a function of the specific winding

www.EngineeringEbooksPdf.com

shape, the material's voltage vs. time characteristic, the past history of the structure, and the statistical nature of the structure's voltage withstand characteristic.

The second activity is to assess or predict the transient voltage within the coil or winding. Today, this is generally accomplished using a lumped-parameter model of the winding structure and some form of computer solution method that allows the internal transient response of the winding to be computed. Once this voltage distribution is known, its effect on the insulation structure can be determined. For example, it can be computed with a two- or three-dimensional finite element method (FEM). The resultant voltages, stresses, and creeps are examined in light of the known material and geometrical capability of the system in light of desired performance margins.

The third activity is to establish a transformer structure or configuration that, in light of the anticipated transient-voltage excitation and material capability, variability, and statistics nature, will provide acceptable performance margins. Occasionally, nonlinear resistors are used as part of the insulation system to achieve a cost-effective, reliable insulation structure. Additionally, means of limiting the transient excitation include modifying the system configuration and/or the use of nonlinear resistors, capacitors, or snubbers.

21.1.4 Complex Issue to Predict

The accurate prediction of the transient-voltage response of coils and winding has been of interest for over 100 years. The problem is interesting and complex for several reasons. The form of excitation varies greatly. Most large power transformers are of unique designs, and as such, each transformer's transient response characteristic is unique. Each has its own impedance vs. frequency characteristic. As such, the transient response characteristic of each transformer is different. Generally, the problem is addressed by building a lumped-parameter model of the transformer with inductances, capacitances, and resistances. Constructing this lumped-parameter model and solving for the resultant transient voltages are challenging since the resultant set of differential equations is challenging to solve. The following sections outline how these challenges are currently addressed.

It should be emphasized that the voltage distribution within the winding is only the first component of the insulation design process. The spatial distribution of the voltages within the winding must be determined, and finally, the ability of the winding configuration to withstand this voltage in view of its voltage vs. time characteristic of the insulation structure must be assessed.

21.2 Surges in Windings

21.2.1 Response of a Simple Coil

Transformer windings are complex structures containing conductors, insulation, and magnetic cores. The final structure is the result of many contradictory requirements levied during the design process. To introduce the basic concepts of a winding's transient response, a very simple disk coil was modeled and the internal transient response computed. The example coil consisted of 100 identical continuous disk sections with each section containing 24 turns. The inside radius of the coil is 12.55 in., the space between each disk coil is 0.220 in., and the coil was assumed to be in air with no iron core. Each turn was made of copper 0.305 in. in height, 0.189 in. in the radial direction, with 0.020 in. of insulation between the turns. For this example, the coil was subjected to a standard full wave with a 1.0 per unit voltage. Figure 21.1 provides a sketch of the coil and the node numbers associated with the calculation. For this example, the coil has been subdivided into 50 equal subdivisions with each subdivision containing a pair of sections, for example, n is equal to 50. Figure 21.2 contains the response of the winding as a function of time for the first 200 μs. As expected, the response is complex and a function of both the applied excitation voltage and the characteristics of the coil itself. Figure 21.2 illustrates that the travel time of the voltage down the winding is approximately 50 μs.

www.EngineeringEbooksPdf.com

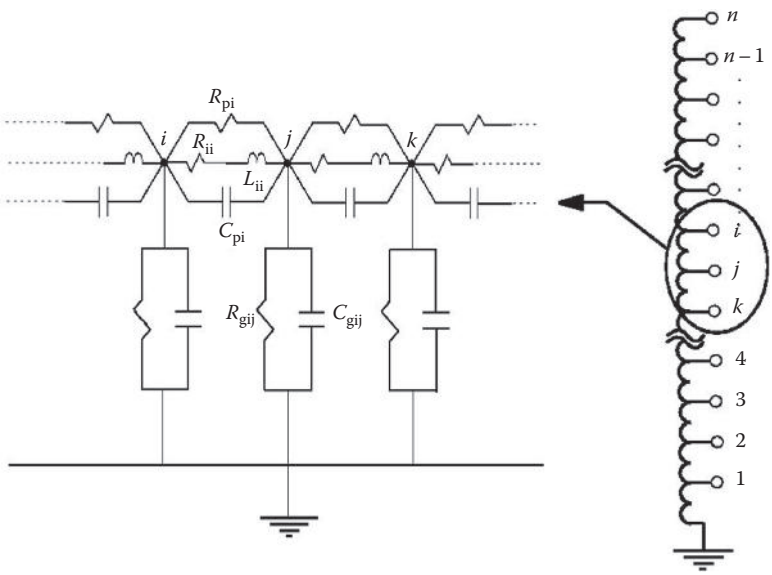

FIGURE 21.1 Sample of section used to model example coil. Mutual inductances should be considered, i.e., M_{ji} is between segments j and i.

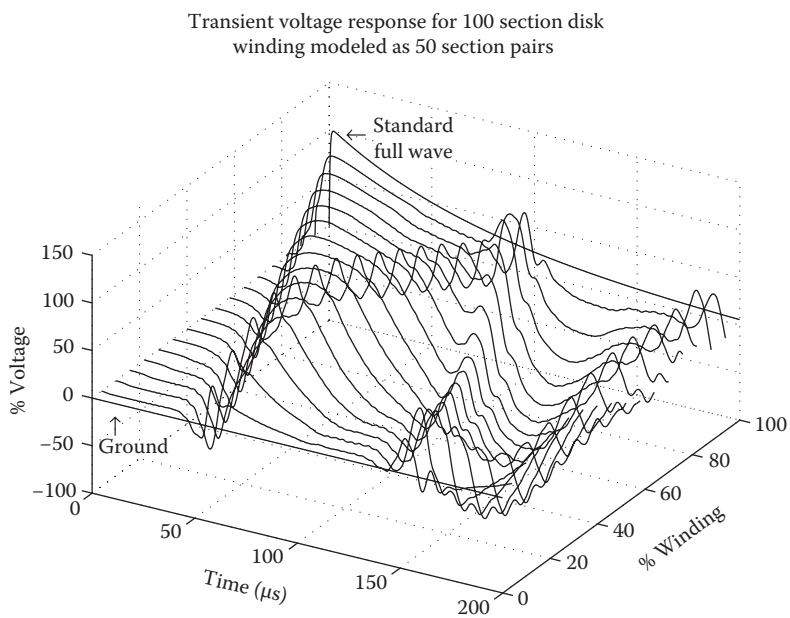

FIGURE 21.2 Voltage vs. time for helical winding.

21.2.2 Initial Voltage Distribution

If the voltage distribution within the disk winding shown in Figure 21.2 is examined at a time very close to zero, approximately 0.25 μs, it is observed that the voltage distribution is highly nonlinear. For the first few tenths of a microsecond, the distribution is dominated by the capacitive structure of the coil. This distribution is often referred to as the initial (or short-time) distribution. For the example 100-section disk coil, the initial distribution is shown in Figure 21.3. Examining the voltage gradient

www.EngineeringEbooksPdf.com

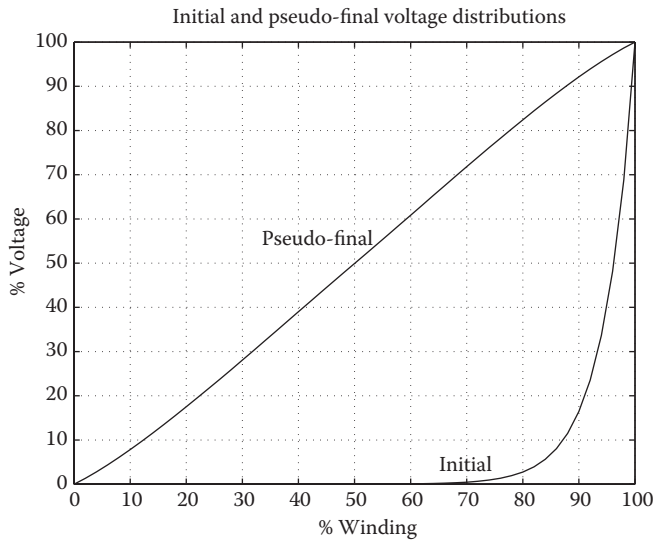

FIGURE 21.3 Initial and pseudofinal voltage distribution.

over the first 10% of the winding, one sees that the voltage difference is 82% rather than the 10% linear difference. This is a rather large enhancement or gradient in the initial portions of the winding. One of the challenges facing a design engineer is how to configure the initial portion of the disk winding to withstand this large voltage gradient.

The initial distribution shown in Figure 21.3 is based on the assumption that the coil knows how it is connected, that is, it requires some current to flow in the winding, and this requires some few tenths of a microsecond to occur. The initial distribution is often determined by evaluating the voltage distribution for the winding's capacitive network and ignoring both the inductive and resistive components of the transformer. This discussion is applicable for times greater than approximately 0.25 μs. This is the start of the transient response for the winding.

For times smaller than 0.25 μs, the voltage distribution is still dictated by capacitance, but the transformer's capacitive network is unaware that it is connected. This is addressed in the chapter on very fast transients and by Narang et al. (1998).

21.2.3 Steady-State Voltage Distribution

The steady-state voltage distribution depends primarily on the inductance and resistance structure of the winding. This distribution, referred to by Abetti (1960) as the pseudofinal, is dominated primarily by the self- and mutual-inductance of the windings and the manner in which the winding is connected. This steady-state voltage distribution is very near (but not identical) to the turns ratio. For the simple winding shown in Figure 21.1, the distribution is known by inspection and shown in Figure 21.3. For more complex windings, the steady-state distribution can be determined by finding the voltage distribution of the inductive network and ignoring the effect of winding capacitances.

21.2.4 Transient-Voltage Distribution

Figure 21.2 shows the transient response for this simple coil when a 1.0 per unit full wave has been applied. The transient response of the coil is the voltage the coil experiences as the coil transitions between the initial voltage distribution and the steady-state distribution. It is the very same idea as pulling a rubber band away from its stretched (but steady-state position) and then letting it go free and monitoring its movement in space and time. What is of considerable importance is the

www.EngineeringEbooksPdf.com

magnitude and duration of these transient voltages and the ability of the transformer's insulation structure to consistently survive these voltages.

The coil shown in Figure 21.1 is a very simple structure. The challenge facing transformer design engineers since the early 1900s has been to determine what this voltage distribution was for a complex winding structure of a commercial transformer design prior to building the transformer.

21.3 Determining Transient Response

21.3.1 History

Considerable research has been devoted to determining the transformer's internal transient-voltage distribution. These attempts started at the beginning of the 1900s and have continued at a steady pace for over 100 years (Abetti, 1959a,b, 1962, 1964). The earliest attempts at using a lumped-parameter network to model the transient response were in 1915. Until the early 1960s, these efforts were of limited practical value due to computational limitations encountered when solving large numbers of stiff coupled differential equations. During this period, the problem was attached in the time domain using either a standing-wave approach or the traveling wave method. The problem was also explored in the frequency domain with the individual frequency results combined to form the needed response in the time domain. Abetti introduced the idea of a physical scale model, or analog for each new design. Then, in the 1960s, with the introduction of the high-speed digital computer, then major improvements in computational algorithms, model detail, resultant accuracy, and computational speed were obtained.

In 1956, Rouxel and Waldvogel used an analog computer to calculate the internal voltages in the transformer by solving a system of linear differential equations with constant coefficients resulting from a uniform, lossless, and linear lumped-parameter model of the winding where mutual- and self-inductances were calculated assuming an air core (Waldvogel and Rouxel, 1956). Later, McWhirter et al. (1956) developed a method of determining impulse voltage stresses within the transformer windings through the use of the digital and analog computers applicable to some extent for nonuniform windings. But it was not until 1958 that Dent et al. (1958) recognized the limitations of the analog models and developed a digital computer model in which any degree of nonuniformity in the windings could be introduced and any form of input voltage applied. During the mid-1970s, efforts at General Electric (White, 1977b; Degeneff et al., 1980) focused on building a program to compute transients for core-form winding of completely general design. By the end of the 1970s, an adequate linear lossless model of the transformer was available to the industry. However, adequate representation of the effect of the nonlinear core and losses was not available. Additionally, the transformer models used in insulation design studies had little relationship with lumped-parameter transformer models used for system studies.

Wilcox improved the transformer model by including core losses in a linear-frequency-domain model where self- and mutual-impedances between winding sections were calculated considering a grain-oriented conductive core with permeability μ_r (Wilcox et al., 1988, 1992). In this work, Wilcox modeled the skin effect, the losses associated with the magnetizing impedance, and a loss mechanism associated with the effect of the radial component of flux on the transformer core during short-circuit conditions. Wilcox applied this modified modal theory to model the internal voltage response on practical transformers. Vakilian et al. (1995a,b) modified White's inductance model (1978) to include the core's saturable characteristics and established a system of ordinary differential equations (ODEs) for the linearized lumped-parameter LRC network, then used Gear's method to solve for the internal voltage response in time domain. During the same period, Gutierrez et al. (1993) and Degeneff et al. (1994) presented a transformer model reduction technique as an effort to reduce the computational time required by linear and nonlinear detailed transformer models and to make these models small enough to fit into electromagnetic transients program (EMTP). In 1994, de Leon and Semlyen presented a nonlinear three-phase transformer model including core and winding losses. This was the first attempt to

www.EngineeringEbooksPdf.com

combine frequency dependency and nonlinearity in a detailed transformer model. The authors used the principle of duality to extend their model to three-phase transformers.

21.3.2 Lumped-Parameter Model

A device's transient response is a result of the flow of energy between the distributed electrostatic and electromagnetic structures of the device. For all practical transformer-winding structures, this interaction is quite complex and can only be realistically investigated by constructing a detailed model of the winding structure and then carrying out a numerical solution for the transient-voltage response. The most common approach is to subdivide the winding into a number of segments (or groups of turns) and build a lumped-parameter model. The method of subdividing the winding can be complex and, if not addressed carefully, affects the accuracy of the resultant model. The resultant lumped-parameter model is composed of inductances, capacitance, and losses. Starting with these inductances, capacitances, and resistive elements, equations reflecting the transformer's transient response can be written in numerous forms. Two of the most common are the basic admittance formulation of the differential equation and the state-variable formulation. The admittance formulation is given by Degeneff (1977a):

$$[I(s)] = \left[\frac{1}{s}[\Gamma_n] + [G] + s[C]\right][E(s)] \tag{21.1}$$

The general state-variable formulation is given by Vakilian (1993) describing the transformer's lumped-parameter network at time t:

$$\begin{bmatrix} [L] & 0 & 0 \\ 0 & [C] & 0 \\ 0 & 0 & [U] \end{bmatrix} \begin{bmatrix} [\,\mathrm{d}i_e/\mathrm{d}t\,] \\ [\,\mathrm{d}e_n/\mathrm{d}t\,] \\ [\,\mathrm{d}f_e/\mathrm{d}t\,] \end{bmatrix} = \begin{bmatrix} -[r] & [T]^t \\ -[T] & -[G] \\ -[r] & [T]^t \end{bmatrix} \begin{bmatrix} [i_e] \\ [e_n] \end{bmatrix} - \begin{bmatrix} 0 \\ [I_s] \\ 0 \end{bmatrix} \tag{21.2}$$

The variables in Equations 21.1 and 21.2 are as follows:

$[i_e]$ is the vector of currents in the winding segments
$[e_n]$ is the model's nodal voltages vector
$[f_e]$ is the windings' flux-linkages vector
$[r]$ is the diagonal matrix of windings series resistance
$[T]$ is the windings' connection matrix
$[T]^t$ is the transpose of $[T]$
$[C]$ is the nodal capacitance matrix
$[U]$ is the unity matrix
$[I(s)]$ is the Laplace transform of current sources
$[E(s)]$ is the Laplace transform of nodal voltages
$[\Gamma_n]$ is the inverse nodal inductance matrix = $[T][L]-1[T]^t$
$[L]$ is the matrix of self- and mutual-inductances
$[G]$ is the conductance matrix, for resistors connected between nodes
$[I_s]$ is the vector of current sources

In a linear representation of an iron core transformer, the permeability of the core is assumed constant regardless of the magnitude of the flux in the core. This assumption allows the inductance model to remain constant for the entire computation. Equations 21.1 and 21.2 are based on this assumption and, additionally, that the various elements in the model are also not frequency-dependent. Work in the

www.EngineeringEbooksPdf.com

last decade has addressed both the nonlinear characteristics of the core and the frequency-dependent properties of the materials. Much progress has been made, but their inclusion adds considerably to the model's complexity and the computational difficulty. If the core is nonlinear, the permeability changes as a function of the material properties, past history, and instantaneous flux magnitude. Therefore, the associated inductance model is time-dependent. The basic strategy for solving the transient response of the nonlinear model in Equation 21.1 or 21.2 is to linearize the transformer's nonlinear magnetic characteristics at an instant of time based on the flux in the core at that instant.

Two other model formulations should be mentioned. de Leon addressed the transient problem using a model based on the idea of duality (de Leon and Semlyen, 1994). The FEM has found wide acceptance in solving for electrostatic and electromagnetic field distributions. In some instances, it is very useful in solving for the transient distribution in coils and windings of complex shape.

21.3.3 Frequency-Domain Solution

A set of linear differential equations modeling the transient response of the transformer can be solved either in the time domain or in the frequency domain. If the model is linear, the time and frequency domain solution will be the same. The frequency-domain solution requires that the components of the input waveform at each frequency be determined or known. These individual sinusoidal waves are then applied individually to the transformer, and the resultant voltage response throughout the winding is determined. Finally, the total response in the time domain is determined by summing the component responses at each frequency by applying superposition. An advantage of this solution method is that it allows the frequency-dependent losses to be addressed easily. Disadvantages of this method are that it does not allow the modeling of time-dependent switches, nonlinear resistors like ZnO, or the recognition of nonlinear magnetic core characteristics.

21.3.4 Solution in Time Domain

The following briefly discusses the solution of Equations 21.1 and 21.2 in the time domain. There are numerous methods to solve Equation 21.1, but it has been found that to solve the stiff differential equation model of a transformer, a generalization of Dommel's method (Dommel, 1969; Degeneff, 1977) works very well. A lossless lumped-parameter transformer model containing n nodes has approximately $n(n + 1)/2$ inductors and $3n$ capacitors. Since the total number of inductors far exceeds the number of capacitors in the network, this methodology reduces storage and computational time by representing each capacitor as an inductor in parallel with a current source. The following system of equations results:

$$[\hat{Y}][F(t)] = [I(t)] - [H(t)] \tag{21.3}$$

where

$[F(t)]$ is the nodal integral of the voltage vector
$[I(t)]$ is the nodal injected current vector
$[H(t)]$ is the past history current vector

and

$$[\hat{Y}] = \frac{4}{\Delta t^2}[C] + \frac{2}{\Delta t}[G] + [\Gamma_n] \tag{21.4}$$

The lumped-parameter model is composed of capacitances, inductances, and losses computed from the winding geometry, permittivity of the insulation, iron core permeability, and the total number of

www.EngineeringEbooksPdf.com

sections into which the winding is divided. Then, the matrix $[\hat{Y}]$ is computed using the integration step size, Δt. At every time step, the previous system of equations is solved for the unknowns in the integral of the voltage vector. The unknown nodal voltages, $[E(t)]$, are calculated by taking the derivative of $[F(t)]$. Δt is selected based on the detail of the model and the highest resonant frequency of interest. Normally, Δt is smaller than one-tenth the period of this frequency. Experience has shown that for a full and chopped wave applied to a 50 MVA 230 kV transformer, a Δt of 0.05 μs is adequate.

The state-variable formulation as shown in Equation 21.2 can be solved using differential equation routines available in IMSL or others based on the work of Gear and Adams. The advantage of these routines is that they are specifically written with the solution of stiff systems of equations in mind. The disadvantage of these routines is that they consume considerable time during the solution process (FORTRAN (1991)).

21.3.5 Accuracy vs. Complexity

Every model of a physical system is an approximation. Even the simplest transformer has a complex winding and core structure and, as such, possesses an infinite number of resonant frequencies. A lumped-parameter model, or for that matter, any model, is at best an approximation of the actual device of interest. A lumped-parameter model containing a structure of inductances, capacitances, and resistances will produce a resonance frequency characteristic that contains the same number of resonant frequencies as nodes in the model. The transient behavior of a linear circuit (the lumped-parameter model) is determined by the location of the poles and zeros of its terminal impedance characteristic. It follows then that a detailed transformer model must possess two independent characteristics to faithfully reproduce the transient behavior of the actual equipment. First, it must include accurate values of R, L, and C, reflecting the transformer geometry. This fact is well appreciated and documented. Second, the transformer must be modeled with sufficient detail to address the bandwidth of the applied waveshape. In a valid model, the highest frequency of interest would have a period at least 10 times larger than the travel time in the smallest winding segment in the model. If this second characteristic is overlooked, the resultant model will produce results that appear valid, but may have little physical basis. A final issue is the manner in which the transformer structure is subdivided. If care is not taken, the manner in which the model is constructed will itself introduce significant errors, and the computation will be mathematically robust but an inaccurate approximation of the physical reality.

Wherever possible, it is prudent to compare computed transient voltages to those measured on the actual physical device. This will provide guidance and validation for the model and solution method.

21.4 Resonant Frequency Characteristic

21.4.1 Definitions

The steady-state and transient behaviors of any circuit, for any applied voltage, are established by the location of the poles and zeros of the impedance function of the lumped-parameter model representing the transformer in the complex plane. The zeros of the terminal impedance coincide with the natural frequencies of the model, by definition. McNutt et al. (1974) define terminal resonance as the terminal current maximum and a terminal impedance minimum. In a physical system, there are an infinite number of resonances. In a lumped-parameter model of a system, there are as many resonances as nodes in the model (or the order of the system). Terminal resonance is also referred to as series resonance (Abetti and Maginniss, 1954; Abetti, 1959a,b). Terminal antiresonance is defined as a terminal current minimum and a terminal impedance maximum (McNutt et al., 1974). This is also referred to as parallel resonance (Abetti and Maginniss, 1954; Abetti, 1959a,b). McNutt defines internal resonance as an internal voltage maximum and internal antiresonance as an internal voltage minimum.

www.EngineeringEbooksPdf.com

21.4.2 Impedance vs. Frequency

The terminal resonances for a system can be determined by taking the square root of the eigenvalues of the system matrix, [*A*], shown in the state-variable representation for the system shown as

$$[\dot{q}] = [A][q] + [B][u]$$
$$[y] = [C][q] + [D][u] \tag{21.5}$$

where
- [*A*] is the state matrix
- [*B*] is the input matrix
- [*C*] is the output matrix
- [*D*] is the direct transmission matrix
- [*q*] is the vector of state variables for system
- [$\dot{q}$] is the first derivative of [*q*]
- [*u*] is the vector of input variables
- [*y*] is the vector of output variables

Determining the impedance vs. frequency characteristic requires a little more effort. In light of the previous definitions, terminal resonance may be defined as occurring when the reactive component of the terminal impedance is zero. Equivalently, terminal resonance occurs when the imaginary component of the quotient of the terminal voltage divided by the injected terminal current is zero. Recalling that in the Laplace domain, that *s* is equivalent to *j*ω with a system containing *n* nodes with the excited terminal code *j*, one can rewrite Equation 21.1 to obtain

$$\begin{bmatrix} e_1(s) \\ e_2(s) \\ - \\ e_j(s) \\ - \\ e_n(s) \end{bmatrix} = \begin{bmatrix} Z_{1j}(s) \\ Z_{2j}(s) \\ - \\ Z_{jj}(s) \\ - \\ Z_{nj}(s) \end{bmatrix} [i_j(s)] \tag{21.6}$$

The voltage at the primary (node *j*) is in operation form. Rearranging the terminal impedance is given by

$$Z_t(\omega) = Z_{jj}(j\omega) = Z_{jj}(s)_ = \frac{e_j(s)}{i_j(s)} \tag{21.7}$$

In these equations, the unknown quantities are the voltage vector and the frequency. It is a simple matter to assume a frequency and solve for the corresponding voltage vector. Solving Equation 21.7 over a range of frequencies results in the well-known impedance vs. frequency plot. Figure 21.4 contains the impedance vs. frequency for the transformer example used in Figures 21.1 and 21.2.

21.4.3 Amplification Factor

The amplification factor or gain function is defined as

$$[N_{lm,j}] = \frac{\text{Voltage between points } l \text{ and } m \text{ at frequency } \omega}{\text{Voltage applied at input node } j \text{ at frequency } \omega} \tag{21.8}$$

www.EngineeringEbooksPdf.com

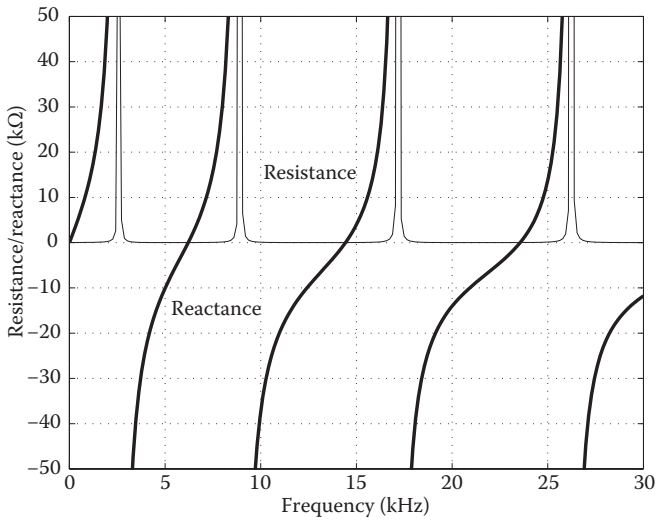

FIGURE 21.4 Terminal impedance for a helical winding.

Degeneff (1977) shows that this results in

$$N_{lm,j} = \frac{Z_{11}(j\omega) - Z_{mj}(j\omega)}{Z_{jj}(j\omega)} \tag{21.9}$$

If one is interested in the voltage distribution within a coil at one of the resonant frequencies, this can be found from the eigenvector of the coil at the frequency of interest. If one is interested in the distribution at any other frequency, Equation 21.9 can be utilized. This is shown in Figure 21.5. The ability to determine the voltage developed within a winding at a specific frequency is becoming more important as transformers are being shown to be more susceptible to oscillatory excitation (IEEE Guide C57.142, 2010).

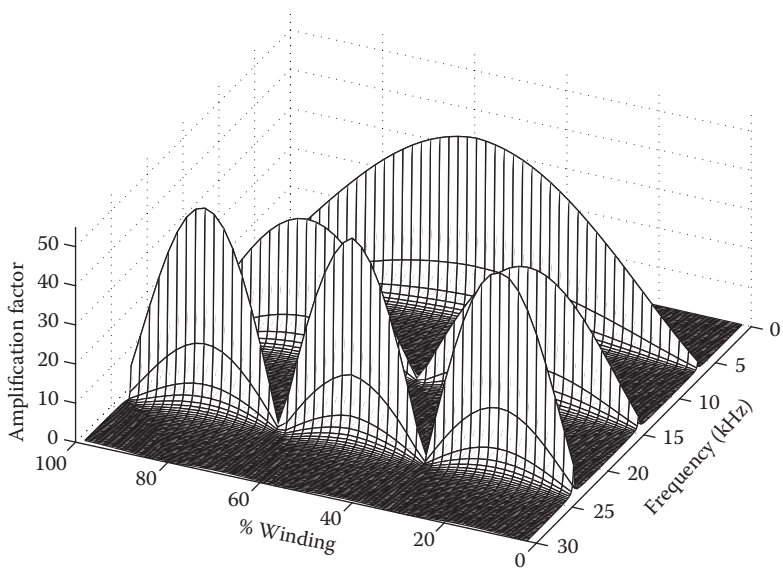

FIGURE 21.5 Amplification factor at midpoint to ground from 0 to 30 kHz.

www.EngineeringEbooksPdf.com

21.5 Inductance Model

21.5.1 Definition of Inductance

Inductance is defined as

$$L = \frac{d\lambda}{dI} \tag{21.10}$$

and if the system is linear,

$$L = \frac{\lambda}{I} \tag{21.11}$$

where

L is the inductance (H)
λ is the flux linkage caused by current I (Wb) turns
I is the current producing flux linkages (A)
$d\lambda$ is the first derivative of λ
dI is the first derivative of I

L is referred to as self-inductance if the current producing the flux is the same current being linked. L is referred to as mutual-inductance if the current producing the flux is other than the current being linked (MIT, 1943). Grover (1962) published an extensive work providing expressions to compute the self- and mutual-inductances in air for a large number of practical conductor and winding shapes.

One of the most difficult phenomena to model properly is the magnetic flux interaction involving the different portions of the winding and the iron core. Historically, this phenomenon has been modeled by dividing the flux into two components: the common and leakage flux. The common flux dominates when the transformer behavior is studied under open-circuit conditions, and the leakage flux dominates the transient response when the winding is shorted or loaded heavily. Developing a transformer model capable of representing the magnetic flux behavior for all conditions the transformer will see in factory test and in service requires the accurate calculation of both the self- and mutual-inductances.

21.5.2 Transformer Inductance Model

Until the introduction of the computer, there was a lack of practical analytical formulae to compute the self- and mutual-inductances of transformer windings (coils) with an iron core. Rabins (1956) developed expressions to calculate self- and mutual-inductances for a coil on an iron core based on the assumption of a round core leg and infinite core yokes both of infinite permeability. Fergestad and Henriksen (1974) improved Rabins' inductance model in 1974 by assuming an infinitely permeable core except for the core leg. In their approach, a set of state-variable equations was derived from the classic lumped-parameter model of the winding.

White (1977a, 1978) derived an expression to calculate the self- and mutual-inductances in the presence of an iron core with finite permeability under the assumption of an infinitely long iron core. White's inductance model had the advantage that the open-circuit inductance matrix could be inverted (White, 1978). White derived an expression for the self- and mutual-inductances between sections of a transformer winding by solving a two-dimensional problem in cylindrical coordinates for the magnetic vector potential assuming a nonconductive and infinitely long open core. He assumed that the leakage inductance of an open-core configuration is the same as that of the closed core.

www.EngineeringEbooksPdf.com

Starting from the definition of the magnetic vector potential $\vec{B} = \nabla \times \vec{A}$ and $\nabla \cdot \vec{A} = 0$ and using Ampere's law in differential form, $\vec{J}_f = \nabla \times \vec{H}$, White solved the following equation:

$$\nabla^2 \vec{A}(r,z) = -\mu_0 \vec{J}(r,z) \tag{21.12}$$

The solution is divided into two parts—the air core solution and the change in the solution due to the insertion of the iron core as shown in the following equations:

$$\vec{A}(r,z) = \begin{cases} \vec{A}_0(r,z) + \vec{A}_1(r,z), & 0 \le r \le R_c \\ \vec{A}_0(r,z) + \vec{A}_2(r,z), & r > R_c \end{cases}$$

$\vec{A}_0(r,z)$ is the solution when the core is present
$\vec{A}_1(r,z)$ and $\vec{A}_2(r,z)$ are the solutions when the iron core is added

Applying Fourier series to Equation 21.12, the solution for $\vec{A}_0(r,z)$ was found first and then $\vec{A}_2(r,z)$.

Knowing the magnetic vector potential allows the flux linking a filamentary turn at (r,z) to be determined by recalling $\phi(r,z) = \oint \vec{A}(r,z) \cdot d\vec{l}$. The flux for the filamentary turn is given by

$$\phi(r,z) = 2\pi r \left\{ \vec{A}_0(r,z) + \vec{A}_2(r,z) \right\} = \phi_0(r,z) + 2\pi r \vec{A}_2(r,z) \tag{21.13}$$

The flux in air, $\phi_0(r, z)$, can be obtained from known formulae for filaments in air (Grover, 1962); therefore, it is only necessary to obtain the change in the flux linking the filamentary turn due to the iron core. If the mutual-inductance, L_{ij}, between two coil sections is going to be calculated, then the average flux linking section i needs to be calculated. This average flux is given by

$$\phi_{ave} = \frac{\int_{R_i}^{\bar{R}_i} \int_{Z}^{\bar{Z}_i} \phi(r,z)\, dz\, dr}{H_i(R_i - \bar{R}_i)} \tag{21.14}$$

Knowing the average flux, the mutual-inductance can be calculated using the following expression:

$$L_{ij} = \frac{N_i N_{j\phi ave}}{I_j} \tag{21.15}$$

White's final expression for the mutual-inductance between two coil segments is

$$L_{ij} = L_{ijo} + 2N_i N_j (1 - \nu_r) \mu_0 R_c \int_0^\infty \frac{I_0(\omega R_c) I_1(\omega R_c) F(\omega)}{\nu_r + (1 - \nu_r)\omega R_c I_1(\omega R_c) K_0(\omega R_c)}\, d\omega \tag{21.16}$$

where

$$F(\omega) = \frac{1}{\omega} \left[\frac{1}{\omega(\bar{R}_i - R_i)} \int_{\omega R_i}^{\omega \bar{R}_i} x K_1(x)\, dx \right] \frac{2}{\omega H_i} \sin\left(\frac{\omega H_i}{2} \right)$$
$$\times \left[\frac{1}{\omega(\bar{R}_j - R_j)} \int_{\omega R_j}^{\omega \bar{R}_j} x K_1(x)\, dx \right] \frac{2}{\omega H_j} \sin\left(\frac{\omega H_j}{2} \right) \cos(\omega d_{ij}) \tag{21.17}$$

www.EngineeringEbooksPdf.com

L_{ijo} is the air core inductance
$\nu_r = 1/\mu_r$ is the relative reluctivity
$I_0(\omega R_c)$, $I_1(\omega R_c)$, $K_0(\omega R_c)$, and $K_1(\omega R_c)$ are modified Bessel functions of the first and second kind

21.5.3 Inductance Model Validity

The ability of the inductance model to accurately represent the magnetic characteristic of the transformer can be assessed by the accuracy with which it reproduces the transformer electrical characteristics, for example, the short- and open-circuit inductances, and the pseudofinal (turns ratio) voltage distribution. The short- and open-circuit inductances of a transformer can be determined by several methods, but the simplest is to obtain the inverse of the sum of all the elements in the inverse nodal inductance matrix, Γ_n. This has been verified (Degeneff and Kennedy, 1975; Degeneff, 1978). The pseudofinal voltage distribution is defined by Abetti (1960). It is very nearly the turns ratio distribution and must match whatever voltage distribution the winding arrangement and number of turns dictate. An example of this is contained in Degeneff and Kennedy (1975).

21.6 Capacitance Model

21.6.1 Definition of Capacitance

Capacitance is defined as

$$C = \frac{Q}{V} \tag{21.18}$$

where
C is the capacitance between the two plates (F)
Q is the charge on one of the capacitor plates (C)
V is the voltage between the capacitor plates (V)

Snow (1954) published an extensive work on computing the capacitance for unusually shaped conductors. Practically, however, most lumped-parameter models of windings are created by subdividing the winding into segments with small radial and axial dimensions and large radii where a simple parallel-plate formula can be used (Degeneff et al., 1980) to compute both the series and shunt capacitances for a segment. For example,

$$C = \varepsilon_0 \varepsilon_r \frac{\text{RadCir}}{nD} \tag{21.19}$$

where
ε_0 is the permittivity of free space, 8.9×10^{-12} C/m
ε_r is the relative permittivity between turns
Rad is the radial build of the segment turns (m)
Cir is the circumference of the mean turn within segment (m)
n is the number of turns with the segment
D is the separation between turns (m)

In computing these capacitances, the relative permittivity, ε_r, of the materials must be recognized. This is a function of the material, moisture content, temperature, and effective age of the material.

www.EngineeringEbooksPdf.com

Clark (1962) and Von Hippel (1954) recorded a large database of this type of information. Since most lumped-parameter models assume the topology to be of circular symmetry, if the geometry is unusually complex, it may be appropriate to model the system with a three-dimensional FEM. It should be emphasized that all of the earlier discussion is based on the assumption that the capacitive structure of the transformer is frequency invariant. If the transient model is required to be valid over a very large bandwidth, then the frequency characteristic of the dielectric structure must be taken into account.

21.6.2 Series and Shunt Capacitance

In order to construct a lumped-parameter model, the transformer must be subdivided into segments (or groups of turns). Each of these segments contains a beginning node and an exit node. Between these two nodes, there will generally be associated a capacitance, traditionally called the series capacitance. These are the intrasection capacitances. In most cases, they are computed using the simple parallel plate capacitance given in Equation 21.19. An exception to this is the series capacitance of disk-winding segments. Expressions for the series capacitance of the disk-winding section are given in the next section.

Additionally, each segment will have associated with it, capacitances between adjacent sections of turns or to an electrostatic shield or earth (the core, tank, or clamping structure). These are the intersection capacitances. These capacitances are generally referred to as shunt capacitances and are normally divided in half and connected to each end of the appropriate segments. This is an approximation, but if the winding is subdivided into a large number of relatively small segments, the approximation is acceptable, and the error introduced by the model is small.

21.6.3 Equivalent Capacitance for Disk Windings

This section presents simplified expressions to compute the series capacitance for disk-winding section pairs. Since most lumped-parameter models are not turn-to-turn models, an electrostatic equivalent of the disk section is used for the series capacitance. It is well known that as the series capacitance of disk-winding sections becomes larger with respect to the capacitances to ground, the initial distribution becomes more linear (straight line) and the transient response, in general, more benign. Therefore, since it is possible to arrange the turns within a disk section in many ways without affecting the section's inductance characteristic or the space or material it requires, the industry has offered many different disk arrangements in an effort to increase this effective series capacitance.

The effective series capacitance of a disk winding is a capacitance, which when connected between the input and output of the disk-winding section pair would store the same electrostatic energy the disk section pair would store (between all turns) if the voltage were distributed linearly within the section. This modeling strategy is discussed in detail by Scheich (1965) and Degeneff (1976) and Kennedy (1975). Figure 21.6 illustrates the cross-section of three common disk-winding configurations. The series capacitance of the continuous disk is given by

$$C_{\text{continuous}} = \frac{2}{3}C_s + \left[\frac{n-2}{n^2}\right]C_t \tag{21.20}$$

The series capacitance of the interleaved disk section pair is given by

$$C_{\text{interleaved}} = 1.128C_s + \left[\frac{n-4}{4}\right]C_t \tag{21.21}$$

www.EngineeringEbooksPdf.com

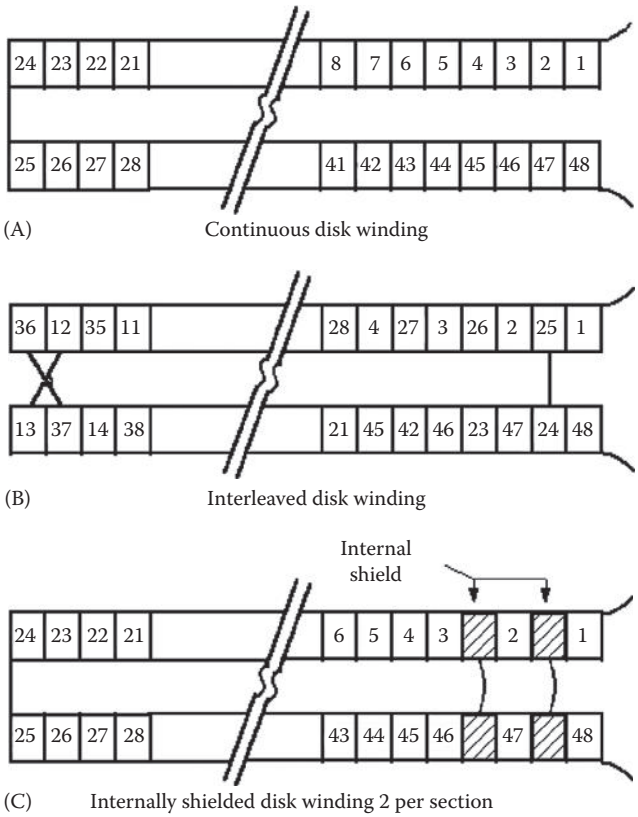

FIGURE 21.6 Common disk-winding section pairs: (A) continuous, (B) interleaved, and (C) internal shield.

The interleaved disk provides a greater series capacitance than the continuous disk but is more difficult to manufacture. A winding that has a larger series capacitance than the continuous disk but simpler to manufacture than the interleave is the internally shielded winding. Its series capacitance is given by

$$C_{\text{internal shield}} = \frac{2}{3}C_s + \left[\frac{n-2-2n_s}{n^2}\right]C_t + 4C_{ts}\sum_{i=1}^{n_s}\left[\frac{n_i}{n}\right]^2 \tag{21.22}$$

where

C_s is the capacitance between sections
C_t is the capacitance between turns
C_{ts} is the capacitance between turn and internal shield
n are turns in section pair
n_i is the location of shield within section
n_s are internal shields within section pair

The method of selecting a disk-winding section is often a compromise of electrical performance, economics, and manufacturing preference for a given firm.

21.6.4 Initial Voltage Distribution

The initial voltage distribution can be determined experimentally by applying a voltage wave with a fairly fast rise time (say 0.5 μs) and measuring the normalized distribution within the winding structure at an

www.EngineeringEbooksPdf.com

intermediate time (say 0.3 μs). The initial distribution can be computed analytically by injecting a current into the excited node and determining the normalized voltage throughout the transformer-winding structure. This computational method is outlined in detail by Degeneff and Kennedy (1975). If one is considering a single disk coil, it is common practice to determine the gradient of the transient voltage near the excited terminal (which is the most severe). This gradient is referred to as α and is found by Greenwood (1991):

$$\alpha = \sqrt{\frac{C_g}{C_s}} \tag{21.23}$$

where
- α is the winding gradient
- C_g is the capacitance to ground (F)
- C_s is the effective series capacitance (F)

For the coil shown in Figure 21.3, the α is on the order of 12. In other words, the voltage differential across the first disk section pair would be approximately 12 times greater that the turns ratio voltage distribution across that same section pair.

21.7 Loss Model

At steady state, losses are a costly and unwanted characteristic of physical systems. At high frequency, losses produce a beneficial effect in that they reduce the transient-voltage response of the transformer by reducing the transient-voltage oscillations. In general, the oscillations are underdamped, for example, the form of the response is a damped sinusoidal wave form. The effect of damping on the resonant frequency is to reduce the natural frequencies slightly. Losses within the transformer are a result of a number of sources, each source with a different characteristic.

21.7.1 Copper Losses

The losses caused by the current flowing in the winding conductors are referred to as series losses. Series losses are composed of three components: DC losses, skin effect, and proximity effect.

21.7.1.1 DC Resistance

The conductor's DC resistance is given by

$$R_{DC} = \rho \frac{l}{A} \tag{21.24}$$

with
- ρ is the conductor resistivity (Ω m)
- l is the length of conductor (m)
- A is the conductor area (m^2)

ρ is a function of the conductor material and its temperature.

21.7.1.2 Skin Effect

Lammeraner and Stafl (1966) give an expression for the skin effect in a rectangular conductor. The impedance per unit length of the conductor is given by

$$Z = \frac{k}{4h\sigma} \coth kb \quad \Omega/\text{m} \tag{21.25}$$

www.EngineeringEbooksPdf.com

where

$$k = \frac{1+j}{a} \tag{21.26}$$

with

$$a = \sqrt{\frac{2}{\omega\sigma\mu}} \tag{21.27}$$

h is the half the conductor height (m)
b is the half the conductor thickness (m)
σ is the conductivity of the conductor (S/m)
μ is the permeability of the material (H/m)
ω is the frequency (rad/s)

Defining,

$$\xi = b\sqrt{j\omega\sigma\mu} \tag{21.28}$$

and Equation 21.25 is expressed as

$$Z_{\text{skin}} = R_{\text{DC}}\xi \coth \xi \quad \Omega/\text{m} \tag{21.29}$$

where R_{DC} is the DC resistance per unit length of the conductor.

Equation 21.29 is used to calculate the impedance due to the skin effect as a function of frequency.

21.7.1.3 Proximity Effect

Proximity effect is the increase in losses in one conductor due to currents in other conductors produced by a redistribution of the current in the conductor of interest by the currents in the other conductors. A method of finding the proximity effect losses in the transformer winding consists of finding a mathematical expression for the impedance in terms of the flux cutting the conductors of an open-winding section due to an external magnetic field. Since windings in large power transformers are mainly built using rectangular conductors, the problem reduces to the study of eddy current losses in a packet of laminations. Lammeraner and Stafl (1966) provide an expression for the flux as a function of frequency in a packet of laminations. It is given in the following equation:

$$\Phi = \frac{2al\mu}{1+j} H_0 \tanh(1+j)\frac{b}{a} \tag{21.30}$$

where
l is the conductor length
H_0 is the rms value of the magnetic flux intensity

and the remaining variables are the same as defined in Equation 21.27.

Assuming H_0 in Equation 21.30 represents the average value of the magnetic field intensity inside the conductive region represented by the winding section i and defining L_{ijo} as

$$L_{ijo} = N_i N_j \phi_{ijo} \tag{21.31}$$

www.EngineeringEbooksPdf.com

where

ϕ_{ijo} is the average flux cutting each conductor in section i due to the current I_j

N is the number of turns in each section, the inductance L_{ij} as a function of frequency is

$$L_{ij} = \frac{L_{ijo}}{(1+j)b/a} \tanh(1+j)\frac{b}{a} \text{H} \tag{21.32}$$

The impedance $Z_{\text{prox}_{ij}}$ is obtained by multiplying the inductance by the complex variable s. Using the same notation as in Equation 21.29, the impedance of the conductor due to the proximity effect is given as

$$Z_{\text{prox}_{ij}} = s\frac{L_{ijo}}{\xi} \tanh \xi \quad \Omega \tag{21.33}$$

21.7.2 Core Losses

The effect of eddy currents in the core has been represented in Avila-Rosales and Alvarado (1982), Tarasiewicz et al. (1993), and de Leon and Semlyen (1994) by the well-tested formula:

$$Z = \frac{4N^2A}{ld^2\sigma} x \tanh x \tag{21.34}$$

where

$$x = \frac{d\sqrt{j\omega\mu\sigma}}{2} \tag{21.35}$$

and

l is the length of the core limb (axial direction) (m)

d is the thickness of the lamination (m)

μ is the permeability of the material (H/m)

N is the number of turns in the coil

A is the total cross-sectional area of all laminations

ω is the frequency (rad/s)

This formula represents the equivalent impedance of a coil wound around a laminated iron core limb. The expression was derived by Avila-Rosales and Alvarado (1982) by solving Maxwell's equations assuming the electromagnetic field distribution is identical in all laminations and an axial component of the magnetic flux.

The total hysteresis loss in core volume, V, in which the flux density is uniform everywhere and varying cyclically at a frequency of ω, can be expressed as

$$P_h = 2\pi\omega\eta V\beta_{1\max}^n \tag{21.36}$$

where

P_h is the total hysteresis loss in core (W/m^3)

η is the constant, a function of material (m A/V^2 s)

V is the core volume (m^3)

β is the flux density

n is the exponent dependent upon material (1.6–2.0)

ω is the frequency (rad/s)

www.EngineeringEbooksPdf.com

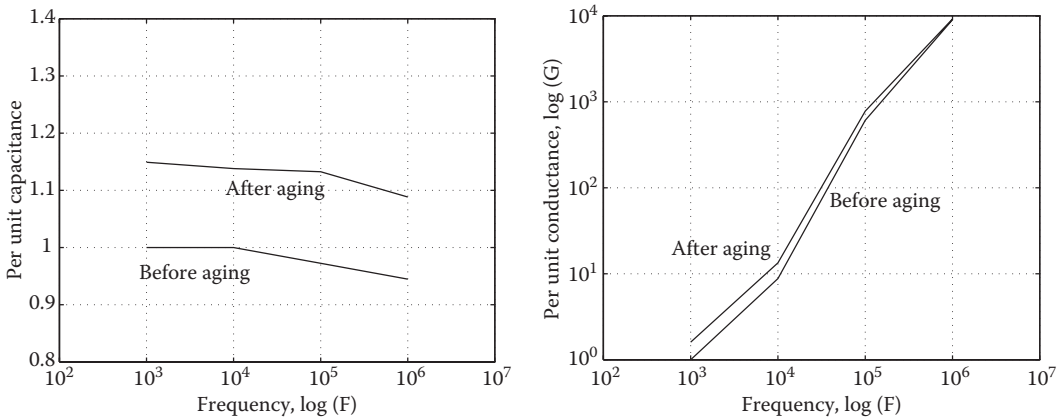

FIGURE 21.7 Oil-soaked paper capacitance and conductance as a function of frequency.

21.7.3 Dielectric Losses

The capacitive structure of a transformer has parallel losses associated with it. At low frequency, the effect of capacitance on the internal voltage distribution can be ignored. As such, the effect of the losses in the dielectric structure can be ignored. However, at higher frequencies, the losses in the dielectric system can have a significant effect on the transient response. Batruni et al. (1996) explore the effect of dielectric losses on the impedance vs. frequency characteristic of the materials in power transformers.

These losses are frequency-dependent and are shown in Figure 21.7.

21.8 Winding Construction Strategies

21.8.1 Design

The successful design of a commercial transformer requires the selection of a simple structure so that the core and coils are easy to manufacture. At the same time, the structure should be as compact as possible to reduce required materials, shipping concerns, and base dimensions. The form of construction should allow convenient removal of heat, sufficient mechanical strength to withstand forces generated during system faults, acceptable noise characteristics, and an electrical insulation system that meets the system steady-state and transient requirements. There are two common power transformer structures in use today. When the magnetic circuit is encircled by two or more windings of the primary and secondary, the transformer is referred to as a core-type transformer. When the primary and secondary windings are encircled by the magnetic material, the transformer is referred to as a shell-type transformer.

21.8.2 Core Form

Characteristics of the core-form transformer are a long magnetic path and a shorter mean length of turn. Commonly used core-form magnetic circuits are single-phase transformers with a two-legged magnetic path with turns wound around each leg, a three-legged magnetic path with the center leg wound with conductor, and a four-legged magnetic path with the two interior legs wound with conductors (MIT, 1943; Bean et al., 1959). Three-phase core-form designs are generally three-legged magnetic cores with all three legs possessing windings and a five-legged core arrangement with the three center legs possessing windings. The simplest winding arrangement has the low-voltage winding near the core and the high-voltage winding wound on top of the low. Normally, in the core-form construction, the winding system is constructed from helical, layer, or disk-type windings. Often, the design requirements call for a winding arrangement that is a more complex arrangement, for example, interleaving high- and low-voltage

www.EngineeringEbooksPdf.com

windings, interwound taps, windings that are bifurcated and have entry and exit points other than the top or bottom of the coil. All of these variations have, to one degree or another, an effect on the transformer's transient-voltage response. To insure an adequate insulation structure, each possible variation must be explored during the design stage to evaluate its effect on the transient overvoltages.

21.8.3 Shell Form

Shell-form transformer construction features a short magnetic path and a longer mean length of electrical turn. Fink and Beaty (1987) point out that this results in the shell-form transformer having a larger core area and a smaller number of winding turns than the core form of the same output and performance. Additionally, the shell form will generally have a larger ratio of steel to copper than an equivalently rated core-form transformer. The most common winding structure for shell-form windings is the primary–secondary–primary (P–S–P), but it is not uncommon to encounter shell-form windings of P–S–P–S–P. The winding structure for both the primary and secondary windings is normally of the pancake-type winding structure (Bean et al., 1959).

21.8.4 Proof of Design Concept

The desire of the purchaser is to obtain a transformer at a reasonable price that will achieve the required performance for an extended period of time. The desire of the manufacturer is to construct and sell a product, at a profit, that meets the customer's goals. The specification and purchase contract is the document that combines both the purchaser's requirements and the manufacturer's commitment in a legal format. The specification will typically address the transformer's service condition, rating, general construction, control and protection, design and performance review, testing requirements, and transportation and handling. Since it is impossible to address all issues in a specification, the industry uses standards that are acceptable to purchaser and supplier. In the case of power transformers, the applicable standards would include IEEE C57, IEC 76, and NEMA TR-1.

21.8.5 Standard Winding Tests

ANSI/IEEE C57.12.00 (2010) defines routine and optional tests and testing procedures for power transformers. The following are listed as routine tests for transformers larger than 501 kVA:

1. Winding resistance
2. Winding turns ratio
3. Phase-relationship tests: polarity, angular displacements, phase sequence
4. No-load loss and exciting current
5. Load loss and impedance voltage
6. Low-frequency dielectric tests (applied voltage and induced voltage)
7. Leak test on transformer tank

The following are listed as tests to be performed on only one of a number of units of similar design for transformers 501 kVA and larger:

1. Temperature rise tests
2. Lightning-impulse tests (full and chopped wave)
3. Audible sound test
4. Mechanical test from lifting and moving of transformer
5. Pressure tests on tank

Other tests are listed in ANSI/IEEE C57.12.00 (2010) which include, for example, short-circuit forces and switching-surge impulse tests. Additionally, specific tests may be required by the purchaser based on their applications or field experience.

www.EngineeringEbooksPdf.com

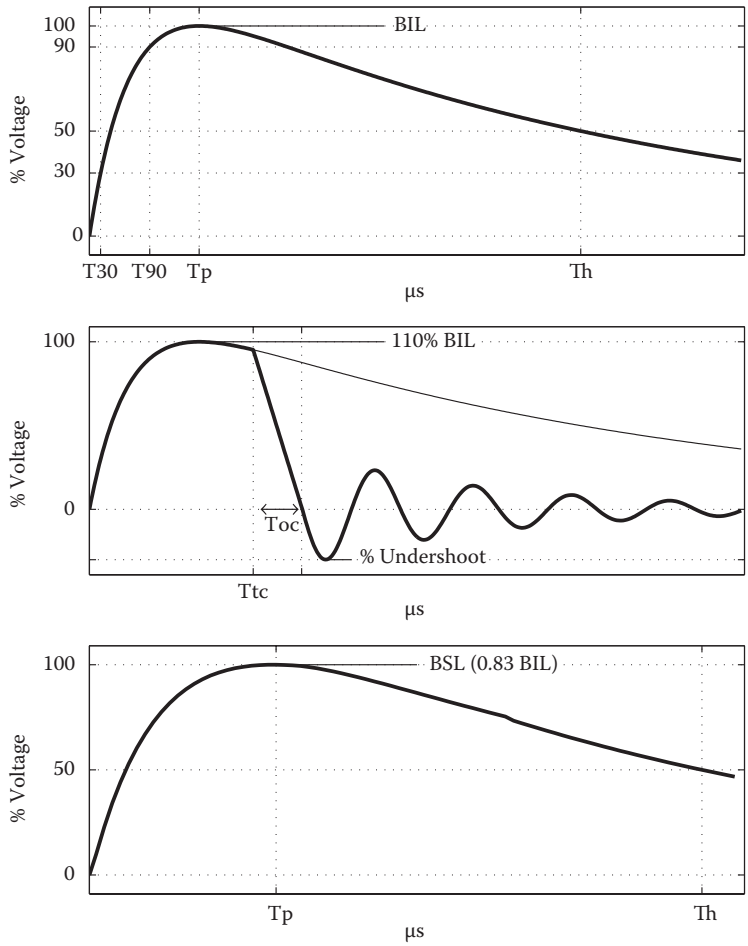

FIGURE 21.8 Standard voltage waveforms for impulse tests: full, chopped, switching surge.

The variety of transient voltages a transformer may see in its normal useful life is virtually unlimited (Degeneff et al., 1982). It is impractical to proof test each transformer for all conceivable combinations of transient voltage. However, the electrical industry has found that it is possible, in most instances, to assess the integrity of the transformer's insulation systems to withstand transient voltages with the application of a few specific aperiodic voltage waveforms. Figure 21.8 illustrates the full, chopped, and switching-surge waveforms. IEEE C57 contains the specific wave characteristics, relationships, and acceptable methods and connections required for these standard tests. Each of these tests is designed to examine the insulation structure for a different transient condition. The purpose of applying this variety of tests is to substantiate adequate performance of the total insulation system for all the various transient voltages the transformer may see in service.

The insulation integrity for steady state and for dynamic voltages is also assessed by factory tests called out in ANSI/IEEE C57.12.00 (2010). One should not be lulled into thinking that a transformer that has passed all factory voltage tests (both impulse and low frequency) can withstand all transient voltages to which the system may subject it. One should always assess the environment that the transformer is applied in and determine if there may be unusual transient-voltage excitation present in an application that is not covered in the standards (see McNutt et al., 1974; Degeneff et al., 1982; Greenwood, 1991).

www.EngineeringEbooksPdf.com

21.8.6 Design Margin

The actual level of insulation requested, for example, BIL/BSL, is determined by recognizing the system within which the transformer will operate, and the arrester protective level. Normally, a minimum protective margin of 15%–20% between the arrester peak voltage and the transformer capability at three (σ) is established. This is illustrated in Figure 21.9 for a 230 kV transformer with a 750 kV BIL protected with a 180 kV rated arrester (Balma et al., 1996). The curve designated A in Figure 21.9 is used to represent the transformer's insulation coordination characteristic (insulation capability) when subjected to aperiodic and oscillatory waveforms. This curve is to be used to represent the transformer voltage–time insulation coordination characteristic when subjected to aperiodic waveforms with a time to failure between 0.1 and 2000 μs. It is based on five points (IEEE C62.22-2009). The five points are the following:

1. Front of wave voltage plotted at its time of crest (about 0.5 μs). If the front of wave voltage is not available, a value of 1.3 times the BIL should be plotted at 0.5 μs.
2. Chopped wave voltage at its time of crest (about 3.0 μs).
3. Full wave voltage (or BIL) plotted about 8 μs.
4. Switching-surge voltage (or BSL) plotted about 300 μs.
5. A point at 2000 μs where its magnitude is established with the following expression:

$$\log V_{2000} = \frac{\log T_{BSL} - \log T_{2000}}{m} + \log V_{BSL} = \frac{\log 300/2000}{m} + \log V_{BSL}$$

V_{2000} is the voltage at 2000 μs, T_{2000}, V_{BSL} is the BSL voltage (or 0.83 the BIL), and T_{BSL} is equal to 300 μs. The value of m is established as the inverse of the slope of a straight line drawn on log–log paper from the BSL point to a point established by the peak of the 1 h induced test voltage plotted at a time the induced voltage exceeds 90% of its peak value (this would be 28.7% of 3600 s or 1033.2 s).

The connection between all points is made with a smooth continuous curve. The first four points in the curve establish an approximate level of insulation voltage capability for which one would anticipate only one insulation failure out of 1000 applications of that voltage level, for example, at 3σ, the probability of failure is 1.0 − 0.99865 or approximately 0.001. Experience has shown that the standard

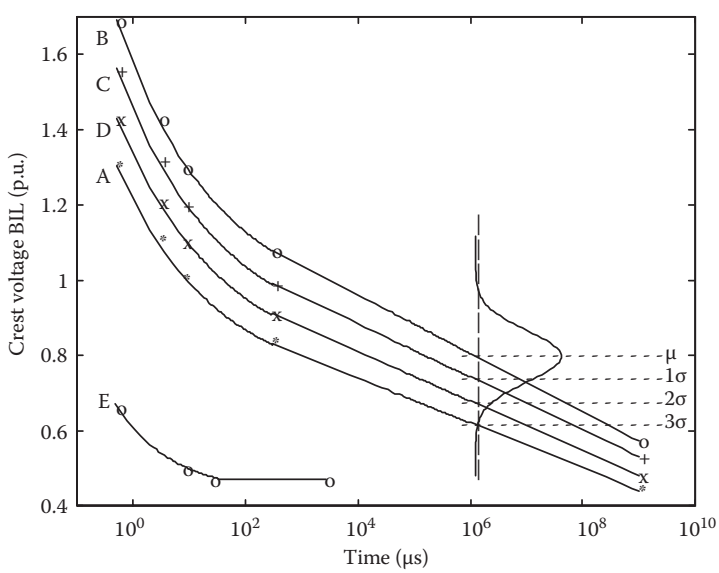

FIGURE 21.9 Voltage–time curve for insulation coordination.

www.EngineeringEbooksPdf.com

deviation for transformer insulation structures is on the order of 10%–15%. Figure 21.9 assumes that σ is 10%. Curve B, or the 50% failure rate curve, is established by increasing the voltage in curve A by 30%. Therefore, for curve B, on average, the unit would be expected to fail one out of two times if it were subjected to this level of voltage. Curves C and D establish 1 and 2σ curves, or 16% and 2.3% failure rate curves, respectively. The inserted normal distribution on the right of Figure 21.9 illustrates this concept. All of this assumes the transformer is new and tested with oil not flowing. As the transformer ages and cooling oil flows, the actual insulation strength is expected to be less.

21.8.7 Insulation Coordination

In a field installation, arresters are routinely placed directly in front of the transformer to provide protection from transient voltages produced on the system. Curve E in Figure 21.9 is a metal oxide arrester protective curve established in a manner similar to that described in IEEE standard C62.2. The curve is specified by three points:

1. The front of wave voltage held by the arrester plotted at 0.5 μs
2. The 8 × 20 μs voltage plotted at 8.0 μs
3. The switching-surge voltage plotted in straight line from 30 to 2000 μs

The protective ratio is established by dividing the transformer insulation capability by the arrester protective level for the waveshape of interest. For example, in Figure 21.9, the protective level for a switching surge is on the order of 177% or (0.83/0.47) × 100.

21.8.8 Additional System Considerations

The standards reflect the growing and learning within the industry, and each year, they expand in breadth, addressing issues that are of concern to the industry. However, at present, the standards are silent with regard to the effects of system voltage on transient response, multiphase surges, aging or mechanical movements of insulation structures, oscillatory voltage excitation, temperature variations, movement of oil, and loading history. A prudent user will seek similar users and explore their experience base.

21.9 Models for System Studies

21.9.1 Model Requirements

The behavior of large power transformers under transient conditions is of interest not only to transformer designers but also to power engineers. The transformer designer employs detailed electrical models to establish a reliable and cost-effective transformer insulation structure. The power engineer models not only the transformer, but also the system, in order to investigate transient voltages within the power system. The requirements for a model appropriate for system studies are somewhat different than that used for insulation design.

Considerable effort has been devoted to computing the transformer's internal transient response. Models of this type may contain several hundred nodes for each phase. This detail is necessary in order to compute the internal response in enough detail to establish an adequate transformer insulation design. The utility engineer usually is not interested in the internal response, but is concerned only with the transformer's terminal response. Even if the transformer's detailed models were available, their use would create system models too large to be effectively used in system studies. Normal practice has been to create a reduced order model of the transformer that represents the terminal response of the transformer. Experience has shown that great care must be taken to obtain a terminal model that provides a reasonable representation of the transformer over the frequency range of interest (Degeneff, 1977; Gutierrez et al., 1993).

www.EngineeringEbooksPdf.com

The challenge in creating a high fidelity reduced model lies in the fact that as the size of the model is reduced, the number of valid eigenvalues must also decrease. In effect, any static reduction technique will produce a model which is intrinsically less accurate than the more detailed lumped-parameter model (de Leon and Semlyen, 1992; Morched et al., 1992).

21.9.2 Reduced Order Model

McNutt et al. (1974) suggested a method of obtaining a reduced order transformer model by starting with the detailed model and appropriately combining series and shunt capacitances. This suggestion was extended by de Leon and Semlyen (1992). This method is limited to linear models and cannot be used to eliminate large proportions of the detailed models without affecting the resulting model's accuracy. Degeneff (1978) proposed a terminal model developed from information from the transformer's nameplate and capacitance measured among the terminals. This model is useful below the first resonant frequency but lacks the necessary accuracy at higher frequencies for system. Dommel et al. (1982) proposed a reduced model for EMTP described by branch impedance or admittance matrix calculated from open- and short-circuit tests. TRELEG and BCTRAN matrix models for EMTP can be applied only for very low-frequency studies. Morched et al. (1992) proposed a terminal transformer model, composed of a synthesized LRC network, where the nodal admittance matrix approximates the nodal admittance matrix of the actual transformer over the frequency range of interest. This method is appropriate only for linear models.

Gutierrez et al. (1993) and Degeneff et al. (1994) present a method for reducing both a detailed linear and nonlinear lumped-parameter model to a terminal model with no loss of accuracy. The work starts with Equation 21.1, then progresses to Equation 21.4, and then applies Kron reduction to obtain a terminal model of the transformer that retains all the frequency fidelity of the initial transformer lumped-parameter model. Gutierrez et al. (1993) and Degeneff et al. (1994) present all the appropriate equations to apply this technique within EMTP.

References

Abetti, P.A., Correlation of forced and free oscillations of coils and windings, *IEEE Power Appar. Syst.*, 78, 986–996, December 1959a.

Abetti, P.A., Survey and classification of published data on the surge performance of transformers and rotating machines, *AIEE Trans.*, 78, 1403–1414, 1959b.

Abetti, P.A., Pseudo-final voltage distribution in impulsed coils and windings, *Trans. AIEE*, 79, 87–91, 1960.

Abetti, P.A., First supplement to reference (12), *AIEE Trans.*, 81, 213, 1962.

Abetti, P.A., Second supplement to reference (12), *AIEE Trans.*, 83, 855, 1964.

Abetti, P.A. and Maginniss, F.J., Fundamental oscillations of coils and windings, *IEEE Trans. Power Appar. Syst.*, 73, 1–10, February 1954.

An international survey on failures in large power transformers in service, Final Report of Working Group 05 of Study Committee 12 (Transformers), *Electra*, 88, May 1983.

Avila-Rosales, J. and Alvarado, L., Nonlinear frequency dependent transformer model for electromagnetic transient studies in power systems, *IEEE Trans. Power Appar. Syst.*, 101(11), 4281–4288, November 1982.

Balma, P.M., Degeneff, R.C., Moore, H.R., and Wagenaar, L.B., The effects of long term operation and system conditions on the dielectric capability and insulation coordination of large power transformers, Paper No. 96 SM 406-9 PWRD, presented at the *Summer Meetings of IEEE/PES*, Denver, CO, 1996.

Batruni, R., Degeneff, R., and Lebow, M., Determining the effect of thermal loading on the remaining useful life of a power transformer from its impedance versus frequency characteristics, *IEEE Trans. Power Deliv.*, 11(3), 1385–1390, July 1996.

www.EngineeringEbooksPdf.com

Bean, R.L., Crackan, N., Moore, H.R., and Wentz, E., *Transformers for the Electric Power Industry*, Westinghouse Electric Corporation, McGraw-Hill, New York, 1959.

Blume, L.F., Boyajian, A., Camilli, G., Lennox, T.C., Minneci, S., and Montsinger, V.M., *Transformer Engineering*, 2nd edn., John Wiley & Sons, New York, 1951, pp. 416–423.

Clark, F.M., *Insulating Materials for Design and Engineering Practice*, Wiley, New York, 1962.

Degeneff, R.C., Simplified formulas to calculate equivalent series capacitances for groups of disk winding sections, General Electric, TIS 75PTD017, August 16, 1976.

Degeneff, R.C., A general method for determining resonances in transformer windings, *IEEE Trans. Power Appar. Syst.*, 96(2), 423–430, March/April 1977a.

Degeneff, R.C., Reducing storage and saving computational time with a generalization of the Dommel (BPA) solution method, in *IEEE PICA Conference Proceedings*, Toronto, Ontario, Canada, May 24–27, 1977b, pp. 307–313.

Degeneff, R.C., A method for constructing terminal models for single-phase *n*-winding transformers, IEEE Paper A78 539-9, *Summer Power Meeting*, Los Angeles, CA, 1978.

Degeneff, R.C., Blalock, T.J., and Weissbrod, C.C., Transient voltage calculations in transformer windings, General Electric Technical Information Series, No. 80PTD006, 1980.

Degeneff, R.C., Gutierrez, M., and Vakilian, M., Nonlinear, lumped parameter transformer model reduction technique, IEEE Paper No. 94 SM 409-3 PWRD, 1994.

Degeneff, R.C. and Kennedy, W.N., Calculation of initial, pseudo-final, and final voltage distributions in coils using matrix techniques, Paper A75-416-8, *Summer Power Meeting*, San Francisco, CA, 1975.

Degeneff, R.C., Neugebaur, W., Panek, J., McCallum, M.E., and Honey, C.C., Transformer response to system switching voltages, *IEEE Trans. Power Appar. Syst.*, 101(6), 1457–1465, June 1982.

Dent, B.M., Hartill, E.R., and Miles, J.G., A method of analysis of transformer impulse voltage distribution using a digital computer, *IEE Proc.*, 105(Pt. A), 445–459, 1958.

Dommel, H.W., Digital computer solution of electromagnetic transients in single and multiphase networks, *IEEE Trans. Power Appar. Syst.*, 88(4), 388–399, April 1969.

Dommel, H.W., Dommel, I.I., and Brandwajn, V., Matrix representation of three-phase *n*-winding transformers for steady state and transient studies, *IEEE Trans. Power Appar. Syst.*, PAS-101(6), 1369–1378, June 1982.

Fergestad, P.I. and Henriksen, T., Transient oscillations in multiwinding transformers, *IEEE Trans. Power Appar. Syst.*, PAS-93, 500–507, 1974.

Fink, D.G. and Beaty, H.W., *Standard Handbook for Electrical Engineers*, 12th edn., McGraw-Hill, New York, 1987.

FORTRAN Subroutines for Mathematical Applications, Version 2.0, September 1991, MALB-USM-PERFCT-EN9109-2.0.

Franklin, A.C., Transient phenomena occuring in transformers, *The J & P Transformer Book*, 11th edn., Chapter 15, Butterworth, London, U.K., 1983, pp. 351–367.

Greenwood, A., *Electrical Transients in Power Systems*, John Wiley & Sons, New York, 1991.

Greenwood, A., *Vacuum Switchgear*, Institute of Electrical Engineers, Short Run Press Ltd., Exeter, U.K., 1994.

Grover, F.W., *Inductance Calculations—Working Formulas and Tables*, Dover Publications, New York, 1962.

Gutierrez, M., Degeneff, R.C., McKenny, P.J., and Schneider, J.M., Linear, lumped parameter transformer model reduction technique, IEEE Paper No. 93 SM 394-7 PWRD, 1993.

IEEE C57.142-2010, *IEEE Guide to Describe the Occurrence and Mitigation of Switching Transients Induced by Transformer, Switching Device, and System Interaction*, 2010.

IEEE C57.12.00-2010, *IEEE Guide and Standards for Distribution, Power, and Regulating Transformers*, 2010.

IEEE C62.22-2009, *IEEE Guide for the Application of Metal-Oxide Surge Arrester for Alternating-Current Systems*, 2009.

IEEE Std. 519, *IEEE Recommended Practices and Requirements for Harmonic Control in Electrical Power Systems*, IEEE Industry Applications Society and Power Engineering Society, April 12, 1999.

www.EngineeringEbooksPdf.com

Kogan, V.I., Fleeman, J.A., Provanzana, J.H., and Shih, C.H., Failure analysis of EHV transformers, *IEEE Trans. Power Deliv.*, 3, 672–683, April 1988.

Kogan, V.I., Fleeman, J.A., Provanzana, J.H., Yanucci, D.A., and Kennedy, W.N., Rationale and implementation of a new 765 kV generator step-up transformer specification, CIGRE Paper 12-202, August 1990.

Lammeraner, J. and Stafl, M., *Eddy Currents*, CRC Press, Cleveland, OH, 1966.

de Leon, F. and Semlyen, A., Reduced order model for transformer transients, *IEEE Trans. PWRD*, 7(1), 361–369, January 1992.

de Leon, F. and Semlyen, A., Complete transformer model for electromagnetic transients, *IEEE Trans. Power Deliv.*, 9(1), 231–239, January 1994.

Massachusetts Institute of Technology, Department of Electrical Engineering, *Magnetic Circuits and Transformers*, John Wiley & Sons, New York, 1943.

McNutt, W.J., Blalock, T.J., and Hinton, R.A., Response of transformer windings to system transient voltages, *IEEE Trans. Power Appar. Syst.*, 93, 457–467, 1974.

McWhirter, J.H., Fahrnkopf, C.D., and Steele, J.H., Determination of impulse stresses within transformer windings by computers, *AIEE Trans.*, 75(pt. III), 1267–1273, 1956.

Morched, A., Marti, L., and Ottevangers, J., A high frequency transformer model for EMTP, Paper No. 925 M 359-0, *IEEE 1992 Summer Meeting*, Seattle, WA, July 12–16, 1992.

Narang, A., Wisenden, D., and Boland, M., Characteristics of stress on transformer insulation subjected to very fast transient voltages, CEA No. 253 T 784, Canadian Electricity Association, July 1998.

Rabins, L., Transformer reactance calculations with digital computers, *AIEE Trans.*, 75(1), 261–267, July 1956.

Scheich, A., Behavior of partially interleave transformer windings subject to impulse voltages, *Bulletin Oerlikon*, 389/390, 41–52, 1965.

Snow, C., *Formulas for Computing Capacitance and Inductances*, National Bureau of Standards, Circular 544, Gaithersburg, MD, September 10, 1954.

Tarasiewicz, E.J., Morched, A.S., Narang, A., and Dick, E.P., Frequency dependent eddy current models for the nonlinear iron cores, *IEEE Trans. Power Appar. Syst.*, 8(2), 588–597, May 1993.

Vakilian, M., A nonlinear lumped parameter model for transient studies of single phase core form transformers, PhD thesis, Rensselaer Polytechnic Institute, Troy, NY, 1993.

Vakilian, M., Degeneff, R., and Kupferschmid, M., Computing the internal transient voltage response of a transformer with a nonlinear core using Gear's method—Part 2: Verification, *IEEE Trans. Power Deliv.*, 10(2), 702–708, May 1995a.

Vakilian, M., Degeneff, R., and Kupferschmid, M., Computing the internal transient voltage response of a transformer with a nonlinear core using Gear's method—Part 1: Theory, *IEEE Trans. Power Deliv.*, 10(4), 1836–1841, October 1995b.

Von Hippel, A., *Dielectric Materials and Applications*, MIT Press, Cambridge, MA, 1954.

Waldvogel, P. and Rouxel, R., A new method of calculating the electric stresses in a winding subjected to a surge voltage, *Brown Boveri Rev.*, 43(6), 206–213, June 1956.

White, W.N., An examination of core steel eddy current reaction effect on transformer transient oscillatory phenomena, General Electric Technical Information Series, No. 77PTD012, April 1977a.

White, W.N., Numerical transient voltage analysis of transformers and LRC networks containing nonlinear resistive elements, *1977 PICA Conference,* Toronto, Ontario, Canada, 1977b, pp. 288–294.

White, W.N., Inductance models of power transformers, General Electric Technical Information Series, No. 78PTD003, April 1978.

Wilcox, D.J., Conlon, M., and Hurley, W.G., Calculation of self and mutual impedances for coils on ferromagnetic cores, *IEE Proc.*, 135(A7), 470–476, September 1988.

Wilcox, D.J., Hurley, W.G., McHale, T.P., and Conton, M., Application of modified modal theory in the modeling of practical transformers, *IEE Proc.-C*, 139, 6, November 1992.

www.EngineeringEbooksPdf.com

www.EngineeringEbooksPdf.com

22

Transformer Installation and Maintenance

22.1 Introduction **22**-2
22.2 Receiving Inspection **22**-2
Shipping Terms • Impact Recorders • External Inspection • Internal Inspection
22.3 Assembly of Transformer **22**-5
General Requirements • Sectionalized Tanks/Shipping Covers • Turrets and Bushings • Cooling Equipment • Oil Preservation System • Load Tap Changers • Other Accessories • Final Internal Inspection • Preliminary Testing
22.4 Vacuum Oil Filling of Transformer **22**-10
Vacuum Oil Purification Equipment • Vacuum Oil Filling • Cold Weather Processing • Vacuum Process • Filling Process
22.5 Acceptance Testing **22**-22
Bushing Power Factor Test • Core Insulation Resistance • Current Transformer Testing • Transformer Turns Ratio • Winding Power Factor • Winding Excitation • Insulation Resistance • Frequency Response Analysis • DC Winding Resistance • Control Device Verification • Oil Testing
22.6 Transformer Energization **22**-29
22.7 Transformer Maintenance **22**-30
Recommended Maintenance Schedules • Maintenance of Components • Oil Quality Assessment • Dissolved Gas Analysis • Transformer Dry Out Methods • Oil Reconditioning and Reclamation
References **22**-46

Troy D. Kabrich
Waukesha Electric Systems

Power transformers demand a high degree of care during installation. The large capital investment for the transformer and their importance to the power system demonstrate the need for careful field preparation for service. This chapter will highlight recommendations for the proper receipt, inspection, field assembly, oil processing, acceptance testing, and maintenance of large liquid-immersed power transformers rated 10 MVA or greater or with primary voltage rating of 69 kV and above.

Basic transformer field installation and maintenance processes will be reviewed to include receiving inspections, assembly of transformer, field dry out techniques, determination of insulation moisture concentration, provision for cold ambient temperature processing, vacuum filling processes, acceptance testing, maintenance schedules, components maintenance, and oil reconditioning and reclamation.

The processes and recommendations introduced may not cover all possible contingencies based upon design, construction, and application of the transformers; therefore, the original equipment manufacturer's (OEM) instructions may differ from standard industry practice. The manufacturer's guidelines

www.EngineeringEbooksPdf.com

or *IEEE C57.93-2007 Guide for Installation of Liquid-Immersed Power Transformers* [1] should always be followed to allow for proper installation, maintenance, and safe operation of the equipment.

22.1 Introduction

For all transformer installations, reasonable precautions should be exercised to avoid exposure of the insulation systems to moisture and to prevent contamination of the active part of transformer. Often the owner or installation contractor must conform to the transformer manufacturer's minimum requirements in order to maintain a warranty. Prior to starting an installation, a detailed process for receiving, assembling, oil processing, and testing the transformer should be developed and communicated so that all involved parties are in agreement and understand the scope of work activities and technical requirements.

22.2 Receiving Inspection [9]

Transformers may be shipped to the site via a variety of methods, including the following:

- Truck
- Depressed center rail car
- Specialized rail car, such as Schnabel car or side rail car
- Barge
- Plane

The transformer may be shipped oil filled; however, if shipping weight precludes obtaining shipping permits, the transformer is often shipped with oil removed and sealed with an atmosphere of dry air or dry nitrogen (Figure 22.1).

22.2.1 Shipping Terms

As an owner of the transformer, it is critical to understand the shipping terms governing the shipment of the transformer to the site. The shipping terms will determine when the risk of loss transfers from the manufacturer to the owner.

FIGURE 22.1 Transformer being delivered to substation. (Courtesy of Waukesha Electric Systems, Waukesha, WI.)

www.EngineeringEbooksPdf.com

22.2.1.1 Free on Board Factory

A transformer purchased free on board (FOB) factory becomes the owner's property as soon as it departs from the factory. The purchaser is responsible for any transit damage and also for obtaining proof that damage occurred in transit. The purchaser must initiate filing of the necessary damage claim forms and obtain proof that damage occurred as a result of shipment.

22.2.1.2 FOB Destination

Transformers purchased FOB destination are owned by the manufacturer during shipment and become the purchaser's property when they are accepted at designated delivery point. The manufacturer is responsible for transit damage and is also responsible for obtaining proof that damage occurred in transit. The manufacturer must initiate filing of the necessary damage claim forms.

22.2.2 Impact Recorders

To help assess whether potential damage occurred in transit, an impact meter which records longitudinal, vertical, and lateral impacts during transit monitors most shipments. The recorder must have sufficient power and recording space to accommodate the entire shipment duration of the transformer. For critical shipments, it is often a good idea to consider a duplicate impact recorder in the event of faulty operation.

Sources of damage from rail transit come from overspeed coupling, vertical "bumps," truck hunting, and slack action. Weight of the car, speed of the coupling, coupler type, and weight and coupler of the idler all play into the forces and acceleration seen by the transformer load. It is also recommended that the impact recorder be installed on the transformer to get the best indication of the accelerations experienced by the transformer. Remote mounting on rail car or transport trailer may reflect inaccurate accelerations compared to those experienced by the transformer.

There are multiple types of impact recorders that can be used including strip chart recorders, one time G-Switch indicators, resettable G-Switch indicators, electronic accelerometers with data logging, and wireless GPS impact recorders (Figure 22.2).

Impact recorders should be reviewed prior to unloading equipment to assess potential shipping damage. For shipments involving multiple modes of transportation, it is recommended that the impact recorder be reviewed at each change of conveyance to assure that each carrier has completed its portion of the delivery without damage to equipment.

22.2.3 External Inspection

When a transformer is received, a thorough external inspection should be made before the unit is removed from the delivery vehicle.

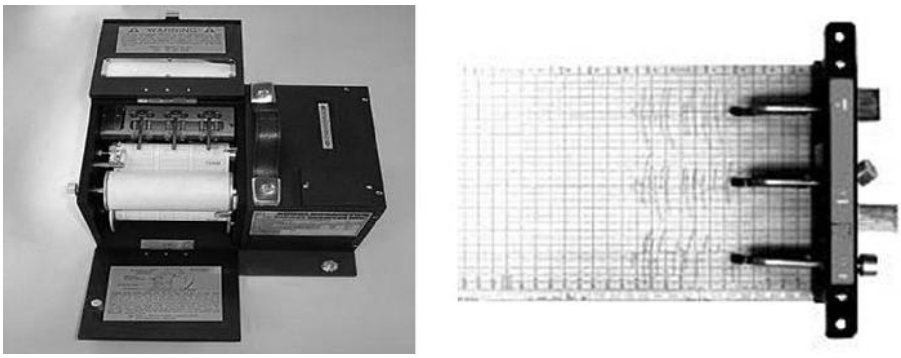

FIGURE 22.2 Strip chart impact recorder. (Courtesy of Waukesha Electric Systems, Waukesha, WI.)

www.EngineeringEbooksPdf.com

Carefully inspect transformer for any apparent damage or shifting on the transport vehicle during transit. Look for any signs of broken or bent tie rods, broken or cracked welds, scratches, dents, broken gauges, or conduit. If there is evidence of damage or rough handling in transit, an inspector representing the carrier and the manufacturer should be notified.

For shipments equipped with impact recorders, review the impact recorder's event register. Impacts in excess of 3Gs in the longitudinal direction and 2Gs in the vertical or lateral direction or in excess of OEM recommendations should be reviewed, and additional inspections conducted to verify no damage is evident. Excessive impacts should be reported to manufacturer and transportation carrier's representatives.

For gas-filled shipments, check tank gas pressure and supply cylinder pressure, if present, to verify if positive pressure or vacuum (when cold ambient conditions exist) is present. If the gas pressure is zero, there is a possibility that outside air and moisture may have entered the tank, and the manufacturer should be notified.

Check the dew point of the gas in the tank. From the dew point measurement, determine if the insulation moisture content is less than 1% or complies with the maximum acceptable value provided by manufacturer.

The core ground should be tested at 500 VDC. The minimum acceptable value in air is 100 MΩ when corrected to a standard temperature of 20°C. In some cases, the core ground may not be externally accessible, and the gas pressure may have to be released from tank and manhole removed to access the core ground. After measurement, the transformer will then have to be repressurized with dry gas.

22.2.4 Internal Inspection

Sometimes an internal inspection must be made of the transformer on the delivery truck if an external inspection indicates possible shipping damage, the impact recorder indicates excessive shock events, or if there is no provision to check the core ground externally. If an internal inspection is made on the rail car, it should be made after notifying the carrier and the manufacturer.

If the delivering carrier will not permit internal inspection of the transformer on the car, note on the acceptance slip that there are "possible internal or hidden damages." When the transformer has been moved to the installation site or to an alternate convenient location to permit the internal inspection, proceed with inspection. Request that a representative of the carrier be present during the inspection.

22.2.4.1 Atmospheric Conditions

Moisture may condense on any surface cooler than the surrounding air. Excessive moisture content in the cellulose insulation or dielectric mineral oil will lower its dielectric strength and could cause a failure of the transformer. Precautions should be made to limit the amount of moisture that may enter the tank. These precautions can include postponing inspection in inclement weather, the use of a positive dry air purge, limiting tank openings, and double access enclosures.

Dry air should be continuously supplied into the transformer while the inspection covers are removed. All applicable confined space entry procedures and continual monitoring of atmosphere must occur while inspecting unit. Nitrogen is heavier than air, so monitoring should include remote locations in the tank. It is advisable that for nitrogen-filled shipments, a vacuum be applied before purging with dry air. Oxygen content should be between 19.5% and 23% prior to any entry by an inspector.

22.2.4.2 Inspection

Prior to making any entry into the transformer tank, establish a foreign material exclusion program to avoid the danger of any foreign objects falling into the transformer. At a minimum, the following precautions should be taken:

- Loose articles should be removed from the pockets of anyone working on the transformer cover.
- All jewelry, watches, pens, coins, and knives should be removed from pockets.
- Protective clothing and clean shoe covers are recommended.

www.EngineeringEbooksPdf.com

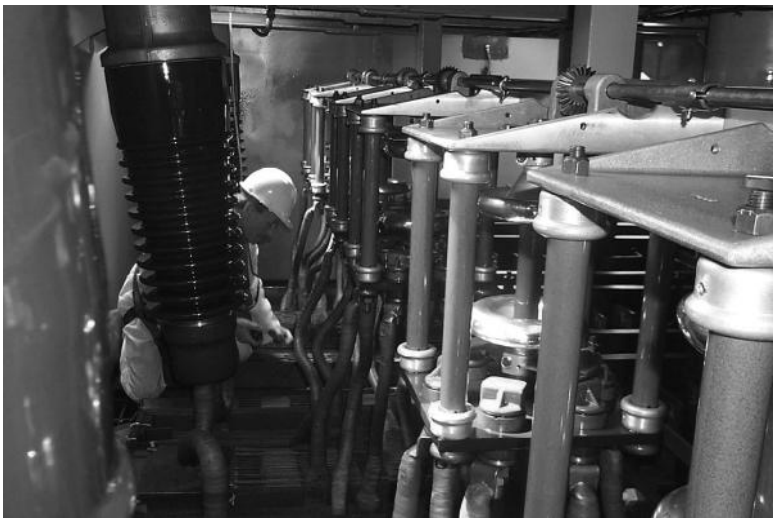

FIGURE 22.3 Technician conducting internal inspection of transformer. (Courtesy of Waukesha Electric Systems, Waukesha, WI.)

- Tools should be tied off with clean cotton tape or cord to prevent falling to bottom of tank.
- Plated tools or tools with parts that may become detached should be avoided.
- An inventory of all parts taken into transformer should be recorded and checked before closing inspection cover to assure all items were removed.

If any object is dropped into the transformer and cannot be retrieved, the manufacturer should be notified.

The inspector should include the following activities during his internal inspection of transformer:

- Removal of any shipping blocking or temporary supports
- Examination for indication of core shifting
- Tests for unintentional core or core clamp grounds
- Inspection of windings, leads, and connections, including clamping, bracing, blocking, spacer alignment, phase barriers, oil boxes, and coil wraps for damage, shifting, misalignment, or looseness
- Inspection of de-energized tap changer (DETC) and in-tank load tap changers (LTCs), including contact alignment and pressure
- Inspection of current transformers, including supports and wiring harness
- Checks for dirt, metal particles, moisture, or other foreign material

The manufacturer should be notified if any damage is found during inspection (Figure 22.3).

22.3 Assembly of Transformer [9]

22.3.1 General Requirements

The transformer should be set on foundation and supported according to base detail shown on OEM base drawing. The base should be level and secured to foundation. Shims may need to be installed under base for leveling.

The transformer should be positioned so that adequate air circulation is provided for transformer.

Prior to beginning any assembly operations, it is strongly recommended that a pressure relief device be installed to prevent any damage to transformer tank due to unintended overpressure.

The tank should be properly grounded to system ground prior to beginning assembly operations.

www.EngineeringEbooksPdf.com

If transformer has been stored in dry gas for an extended period of time, typically in excess of 90 days, the manufacturer should be consulted for any special procedures that may be required.

As noted previously, care should be taken during assembly operations to minimize the entrance of moisture and foreign materials. Transformer should not be opened in inclement weather or when condensation forms on internal surfaces of transformer. When transformer is open, a continuous purge of dry air (dew point of −50°C) should be applied with sufficient volume to produce a continuous outward flow of air. Tank openings should be minimized.

An assembly plan should be developed to minimize the amount of exposure for the unit during assembly operations and also minimize potential damage as components are installed.

If supplied with a transformer, it is recommended that new gaskets be installed for all detached components. Nitrile gasketing material is most commonly used for oil joints and can be reused if not mechanically damaged. Gaskets should only be glued on one side, and a light application of petroleum jelly can be applied to gasket surface to help alignment of components and lessen possibility of rolling gasket out of groove or tearing material.

All pipe fitting connections should be properly cleaned and sealed with Teflon tape or sealing paste.

Often transformer components are match-marked to identify location and orientation of parts removed for shipment. Assembly crews should look for these items to assure the best fit of assembled components.

In the event that assembly operations take longer than 1 day, it is recommended that a flash vacuum of 30 min be applied to flash off surface moisture and that the transformer is sealed with dry air or nitrogen under positive pressure overnight.

22.3.2 Sectionalized Tanks/Shipping Covers

Some very large transformers may require removal of a shipping cover and installation of a permanent cover if unit is too large to meet available shipping clearances. The permanent cover will need to be installed prior to beginning any assembly operations.

Depending upon the manufacturer's instructions and the mechanical capabilities of the tank, the tank may be partially filled with oil prior to removal of shipping cover and installation of permanent cover to minimize atmospheric exposure of insulation. If partial filling is not used, dry air should be blown into tank, and while shipping cover is off, a plastic cover should be placed over transformer to minimize the loss of dry air. The permanent cover should be installed and unit sealed as soon as practically possible.

22.3.3 Turrets and Bushings

Any removed bushing turrets should be installed. Some turrets have current transformers installed. Sometimes the current transformer may be suspended from transformer cover (drop in mounting) and may need to be rotated and elevated in its mounting before installation of turret. Gaskets and gasket grooves should be carefully cleaned. Gaskets should be verified to be within gasket groove, and the turret mounting should be uniformly tightened. Follow torque requirements specified by OEM or verify the flanges are tightened metal to metal to verify proper compression of gaskets. Any bonding jumpers or grounds should be installed as required. Any current transformer wiring should be connected at the respective terminal blocks.

All bushings should be carefully cleaned and inspected prior to installation. When possible, it is advisable to perform power factor test of bushings prior to installation to assure there is no damage. Prior to installing bushing, any temporary shipping braces and lead supports should be removed. Manufacturers often identify these temporary and shipping braces by color code or tagging.

Bushings should be lifted in accordance with manufacturer's instruction using lifting eyes and spreader bars as applicable. Bushings should be lowered into openings carefully, assuring no damage to bushing, current transformers, or line leads. Draw rod and draw lead bushings require that lead be

www.EngineeringEbooksPdf.com

FIGURE 22.4 Transformer bushing being installed. (Courtesy of Waukesha Electric Systems, Waukesha, WI.)

pulled up through center tube of bushing while being lowered into position. All corona shields and line lead terminations should be made to bushing. Bushing current carrying connections should be cleaned and made in accordance with manufacturer's requirements, including proper observation of locking requirements, torque requirements, and proper bolting material. For some connections, there may be additional requirements to insulate connections for dielectric strength or install shields or other insulating barriers. Manufacturer's instructions regarding any grading, contour, insulation, or shielding of these connections should be followed. The bushing mounting flange may require external bonding or grounding jumpers to be installed (Figure 22.4).

22.3.4 Cooling Equipment

Radiators, coolers, pump, header assemblies, liquid piping, valves, and fittings should be inspected and cleaned prior to installation. If there is evidence of moisture intrusion or contamination, the cooling equipment should be cleaned and flushed with dielectric mineral oil before assembly.

All gaskets should be replaced or inspected prior to installation of components. The use of gasket cement to hold the gasket in place during installation may be required. The application of petroleum jelly on the gasket surface may assist installation and prevent damage.

Fans should be mounted according to manufacturer's instruction. Fan guards should be installed, and interconnecting wiring be completed. Some fan motors may have temporary covers over weep holes to prevent moisture intrusion during shipment and should be removed at time of installation.

Radiators or coolers are usually capable of withstanding full vacuum. If not, these should not be installed until after the tank has been filled with mineral oil. If liquid-to-water (FOW) heat exchangers are used, it is recommended that the water passage be drained and vented to atmosphere prior to drawing a vacuum on the transformer tank.

22.3.5 Oil Preservation System

Sealed systems with pressure-vacuum relief valve are often shipped installed on the transformer. In the event that transformer needs to be vacuum filled, the pressure–vacuum relief valve will need to be isolated for the filling operations.

Nitrogen systems may be shipped mounted or removed from transformer. In most cases, after mounting a regulator system, the piping will need to be connected to the gas space. Any tank braces used for

www.EngineeringEbooksPdf.com

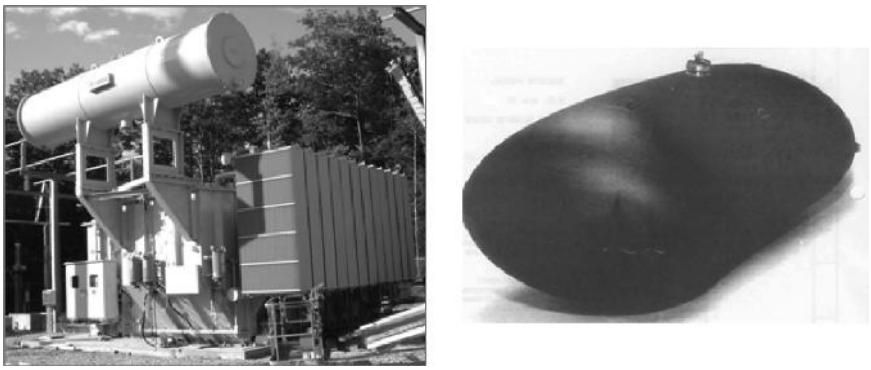

FIGURE 22.5 Conservator tank and inflated air cell removed from tank. (Courtesy of Waukesha Electric Systems, Waukesha, WI.)

expansion space should be checked and drained of any oil. Bottle connections, regulator, and sump assemblies should be pressure checked. The regulator assembly should be isolated by valve or disconnecting and sealing during vacuum operation.

Expansion tanks often require structural assemblies to support the mounting of the tank. These mounting structures must be installed according to manufacturer's instruction. Prior to mounting expansion tank, it is a recommended practice to remove the manhole cover on the end of tank to inspect air cell and verify that there is no damage to liquid level float. A pressure test of air cell at 1 PSI for 1 h is recommended. All oil piping, Buchholz relay, and gas detector relay piping, as appropriate for the design, should be installed between the main tank and the conservator tank (Figure 22.5).

Some manufacturer's expansion tanks are rated for full vacuum while others are not. Manufacturer's instructions should be followed for preparation of the conservator system during oil processing. After completing oil processing, installation of dehydrating breathers should be completed.

22.3.6 Load Tap Changers

Most in-tank and on-tank LTCs will be mounted for shipment. Often there are no assembly operations required for these units; however, there are sometimes shipping braces that may need to be removed during assembly. It is advisable that the LTC compartment be opened and inspected per manufacturer's instruction to assure no shipping damage.

Some LTCs may have the motor drive and operating shafts removed for shipment. Care should be taken to verify that the LTC position on the diverter gear drive matches the motor drive position indicator and that all drive shafts are properly coupled. It is suggested that LTC be manually and electrically operated to verify proper operation and alignment.

For LTCs that are removed for shipment, they will require reconnection of LTC leads to terminal boards. Careful attention should be paid to the lead markers to assure they are properly terminated on the LTC board. It is advisable to check the electrical contact resistance with digital low resistance ohmmeter (DLRO) after assembly. Some of these connections may also be required to be insulated with crepe insulation tape after connection. Manufacturer's instructions should be followed for these operations. It is suggested that LTC be manually and electrically operated to verify proper timing and selector switch contact alignment.

22.3.7 Other Accessories

For some transformers, the control cabinet may have been removed for shipping clearances. The cabinet should be mounted per manufacturer's instructions. Often control cabinets will have some type of

www.EngineeringEbooksPdf.com

shock mounting. If control cabinet is removed, all conduits from the control cabinet to the associated devices or junction boxes will need to be installed. The control and power cables will need to be pulled and terminated as per control and point-to-point schematics. Current transformer circuits should be shorted and grounded at terminal blocks in control cabinet.

The liquid level gauge, temperature gauges, flow gauges, pressure relays, and other accessories or monitoring devices should be installed in accordance with manufacturer's instructions. All electrical connections should be made. Devices that are not capable of withstanding full vacuum should not be installed until after vacuum filling operations are completed.

22.3.8 Final Internal Inspection

Prior to closing the transformer for vacuum filling, it is recommended that a final internal inspection be conducted to assure that transformer is ready for vacuum filling. During the final inspection, one should do the following:

- Verify that no foreign material is left in transformer.
- Verify that all shipping or temporary braces have been removed.
- Verify that all internal bushing connections are tight and that corona shields and insulating barriers are properly installed.
- Verify that all leads have proper line-to-ground and lead-to-lead clearance.
- Verify alignment, timing, and contract pressure of DETC and LTC.
- Inspect all clamping, bracing, blocking, spacer alignment, phase barriers, oil boxes, and coil wraps.
- Check current transformers, wire harness, and connections to lead feed through blocks.
- Verify proper operation of any liquid level gauge in main tank.
- Check to verify proper orientation of any cooling valves.
- Test core and clamp grounds. Check any series transformer or preventative autotransformer grounds.
- Check for any shifting of core.

22.3.9 Preliminary Testing

Prior to proceeding with the vacuum filling operations, it is advisable to conduct some preliminary electrical tests prior to vacuum filling so that any abnormal conditions can be detected and corrected before incurring excessive costs for draining and refilling transformer. The maximum test voltage that should be applied to a transformer without oil is 1000 V.

22.3.9.1 Bushing Power Factor Test

Bushing power factor tests can be made *prior* to installation of the bushing into transformer with bushing in a test stand or suspend via clean, dry nylon sling from a crane. Once installed in the transformer and connected to the transformer windings, the bushings should not be tested until transformer is oil filled. Bushing power factor values should be compared to transformer nameplate. Test values should compare favorably to values stamped on nameplate of bushing.

22.3.9.2 Core Insulation Resistance

Insulation resistance or megger tests should be performed to check core insulation. Core resistance measurements should also be made for the series transformer and preventative autotransformer, if equipped. Some manufacturers also have isolated core clamp grounds that should be tested. The minimum acceptable test value is 100 MΩ when corrected to a standard temperature of 20°C.

22.3.9.3 Current Transformer Testing

The current transformers should be tested for proper ratio, excitation, and polarity. The current transformers can be tested via primary current injection or by secondary voltage injection method. Each ratio

www.EngineeringEbooksPdf.com

connection on a multi-ratio current transformer should be checked. The measured ratio should be within 0.5% of nameplate ratio of the current transformer.

22.3.9.4 Transformer Turns Ratio

A transformer turns ratio should be performed to verify proper connection of bushing leads and proper operation of the DETC and LTC. The transformer turns ratio should be done in all DETC taps with LTC in neutral and with DETC in rated position and in each LTC tap. The measured ratio should be within ±0.5% of calculated voltage ratio. A three-phase ratio bridge can also be used to verify the correct phase displacement of the transformer.

22.4 Vacuum Oil Filling of Transformer [8]

After completing all assembly operations, transformer is ready for vacuum filling operations. Manufacturer's instructions will vary based upon size and voltage class of transformer and should always be followed to validate the warranty provisions of the transformer.

The following items discuss the basic oil handling equipment and requirements necessary to properly vacuum fill the transformer.

22.4.1 Vacuum Oil Purification Equipment

In order to properly process the electrical insulating mineral fluids for large power transformers, the use of specialized vacuum fluid purification equipment is required by most OEMs. The primary purposes of the vacuum oil purification system are to

- Remove water and gas vapors from solid insulation within the transformer
- Reduce the moisture content of the insulating fluid
- Remove solid particulate from the fluid
- Reduce soluble gases from the insulating fluid

In a simplified flow diagram of the operation of a vaccum oil purification system, as shown in Figure 22.6, transformer oil is taken from a storage tank and pumped into the purification unit through an inlet pump. After passing through the inlet pump, an inlet filter is often used to trap particulate matter. The filter is generally designed to have filtration cartridges ranging from 0.1 to 20 μm pore size.

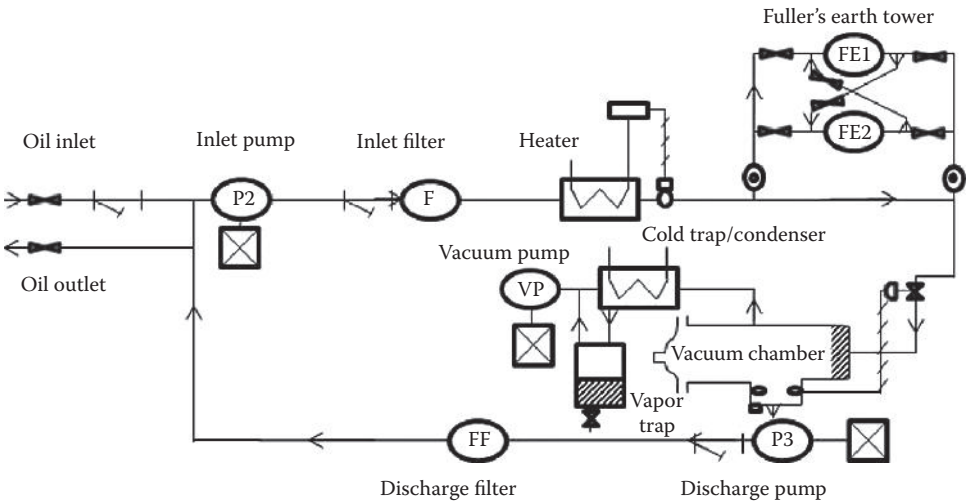

FIGURE 22.6 Vacuum purification unit flow diagram.

www.EngineeringEbooksPdf.com

After passing through the inlet filter, the oil passes through a series of heater elements to raise the temperature of the fluid to increase the vapor pressure of the moisture and dissolved gases whereby the vapor can be removed by high vacuum. The heated oil is then pumped into a vacuum chamber where the majority of the gas and moisture extraction occurs. Techniques for accomplishing this vary by manufacturer, but all techniques reduce the flow rate of fluid through the chamber while increasing the surface area to reduce foaming and improve gas and water vapor removal. After exiting the chamber, the oil is generally filtered through a discharge filter to remove particulate material and then pumped to the transformer. The discharge filter with 0.5 μm filter element is also a safeguard to prevent any admittance of foreign material that could result from equipment malfunction.

From a process efficiency standpoint, it is suggested that vacuum oil purification equipment have the following minimum functional performance parameters for transformer oil originating with 12% total dissolved gas content and 60 ppm total dissolved water content:

- After one pass, the total gas content should not exceed 0.2%.
- After one pass, the total dissolved water content should not exceed 10 ppm.
- After one pass, 98% of all particles greater than the nominal pore size of discharge filter should be removed.

The oil purification system should also be capable of operating at temperatures ranging from 10°C to 80°C, achieve a minimum flow rate of 1200 GPH, and the vacuum system should be capable of blanking pressure of less than 50 μm of Hg.

In addition to the basic elements of the vacuum purifying equipment, it may be beneficial to have additional oil processing equipment when it is necessary to perform maintenance, field dry out, or oil reclamation activities. Some of these elements include the following:

Cold trap—The cold trap serves as a condensate trap located between transformer and vacuum pump or between degassing chamber and vacuum pump to trap oil and water vapors. These trapped vapors can then be collected and measured to determine the actual amount of moisture being removed from the transformer and insulating fluid by means of physical measurement of the condensate. Cold traps can be constructed with self-contained refrigeration units or can be mechanical traps utilizing liquid nitrogen or a dry ice and acetone mixture as the coolant.

Fuller's earth filtration—Fuller's earth is a bulk filtration media of naturally occurring adsorbent clays effective for the removal of acids and oxidation products, such as sludge, resulting from high molecular weight sulfonates, resins, and asphaltenes. Fuller's earth filtration is beneficial when reclaiming oil that has poor color, high neutralization number, low interfacial tension, and high power factor.

Di-tertiary-butyl-para-cresol (*DBPC*) *injection system*—When reclaiming oil or upgrading oil for free breathing transformers, an oxidation inhibitor injection system can be used to inject an oxidation inhibitor (DBPC) into the insulating fluid which slows down the oxidation process in the insulating fluid.

In addition to the vacuum purification system, other testing and monitoring devices and oil handling equipment will be required:

Oil test equipment—It is suggested that insulating fluid testing equipment be available on site or at a laboratory to validate the received condition of new insulating fluid or existing condition of the fluid when performing oil processing activities. Minimum equipment would include the following:

- Oil dielectric test set capable of testing according to the ASTM-D877 or ASTM-D1816 standards
- Moisture in oil test set or hygrometer capable of testing according to ASTM-D1533
- Interfacial tension test set capable of testing according to ASTM-D971
- Power factor test set capable of testing according to ASTM-D924

Dew point test equipment—This is necessary for validating dryness of transformer insulation system. A device such as the Alnor Type 7300 is recommended due to the calibration requirements resulting from electronic sensitivity and oil vapor contamination that is associated with other instruments.

www.EngineeringEbooksPdf.com

Vacuum gauges—Vacuum gauges are required for monitoring of pressure levels on the transformer tank, LTC compartments, and vacuum purification chamber. Gauges should be noncontaminating such as Hastings products or include a mercury trap to prevent foreign material from entering the transformer.

Dry gas—Depending upon the OEM filling specifications and type of oil preservation system, the use of dry gas to relieve vacuum may be required. Reference to the term dry gas implies the use of dry nitrogen or dry air only.

Nitrogen should have a dew point not higher than −50°C, and total impurities should not exceed 0.1% by volume. Dry air should have a dew point of −50°C or lower, and oxygen content should be between 19.5% and 23%.

Vacuum hose—Vacuum hose must be capable of operating at a pressure of −15 PSI. It is suggested that a minimum of 4 in. diameter hose be utilized to maximize vacuum pump efficiency. The hose should also be rated for use with electrical insulating fluids to minimize any degradation as the result of contact with oil vapors and condensation.

Oil hose—Suitable oil hose is required and should be identified for compatibility with electrical insulating fluids. Oil hose should be capable of withstanding operating pressures of −15 to 100 PSI. Hoses should also be rated for temperatures up to 95°C. Goodyear Red Flexwing, BF Goodrich Type 82A, and US Rubber PS 120 are representatives of suitable hoses both for vacuum and oil handling purposes.

Oil storage tanks—Sufficient site oil storage will be required. Stainless steel tanks that have been cleaned and washed are preferred. Inspections should be conducted on any storage tank, including sumps where free water or foreign materials can accumulate. Any tanker showing evidence of foreign material and/or strong odors should be rejected. If static tanks such as rubber bladder tanks or polyethylene tanks are to be used, verify that they are compatible with dielectric insulating fluids, are clean and dry, and are suitable for oil temperatures up to 95°C.

Miscellaneous equipment—There are a variety of additional items that will be needed to make vacuum connection, oil connections, balancing lines, oil level indication, and monitor tank pressures. These items include the following:

- Compound gauges
- An assortment of pipe fittings and valves
- Tygon tubing for oil level indication
- Insulating material/tarps
- Spill control and counter measure equipment

22.4.2 Vacuum Oil Filling

Once the proper equipment and materials are on site and transformer has been assembled, the transformer can be filled in accordance with the OEM filling specification. OEM specifications for the vacuum filling process vary based upon transformer construction, rated voltage levels, storage durations, and ambient weather conditions. In the following sections, general industry guidelines for vacuum filling transformer with conventional transformer mineral insulating fluids will be reviewed. Some smaller power transformers may be filled with silicone insulating fluids or natural ester fluids that may have different OEM processing requirements than conventional fluid.

Power transformers have a complex insulation structure composed of physical separation, insulation materials such as wood, cellulose, Nomex®, micarta, and dielectric insulating fluid. The entire insulation structure can be jeopardized if there are excessive amounts of moisture, gas, or particulate matter present in the insulating medium. Vacuum filling processes are designed to remove surface humidity and entrapped gas vapors from insulation material within the transformer and to remove particulate matter, soluble gases, and moisture from the insulating fluid. Tank volume, operating and ambient temperatures, moisture and gas content, and the efficiency and size of vacuum system affect the vacuum process.

www.EngineeringEbooksPdf.com

22.4.2.1 Preparation for Vacuum Filling Operations

Prior to starting the vacuum filling operations, the operators need to validate some critical parameters to establish the requirements of the vacuum process. Key steps in the process will be to

- Confirm that the temperature of the active part of the transformer is sufficient to allow for moisture vapors to be removed under vacuum
- Confirm that the transformer insulation moisture content is not above acceptable limits of the OEM
- Confirm that the tank and fittings are properly sealed and do not have any leaks which could jeopardize the dryness of the active part during vacuum operations

Furthermore, it is recommended that certain electrical tests and inspections be completed prior to beginning vacuum operations to eliminate any costly rework associated with accessing the defects after transformer has been filled with oil. Once the preliminary tests and inspections have been completed, vacuum processing operations can commence.

22.4.2.2 Setup

When beginning vacuum operations, there are several precautionary items that should be considered so that there is no potential damage to the transformer or personnel safety issues for the operators. These precautions include the following:

- Ground and bond the transformer tank, vacuum processing equipment, all transformer bushing terminals, and current transformer secondaries to dissipate any static charge that can develop from filling operations.
- Make sure external connections to transformer are disconnected or have sufficient slack before applying vacuum.
- It is not recommended to perform electrical tests on transformer while under vacuum.
- Cover transformer tank top before beginning vacuum to prevent moisture from collecting on tank.
- Valve off all devices that are not rated for full vacuum such as conservator tanks, older style sudden pressure relays, nitrogen systems, and certain monitoring devices such as Hydran™ sensors.
- Verify that all compartments, barriers, and terminal boards are rated for full vacuum. It is advisable to equalize the vacuum on both sides of a barrier regardless of its ability to withstand full vacuum. Typically, information is available on the transformer nameplate and in the OEM manual.
- Provided that the mechanical relief device (MRD) will withstand full vacuum, it is recommended that the MRD be left in place, or an MRD be installed as part of the operator's vacuum connection to prevent a potential overpressure condition of the transformer tank.

After reviewing these precautions, the operators are ready to begin the installation of oil processing equipment to the transformer. The vacuum connection can be installed on a suitable valve or blanking location on the transformer cover as indicated on the OEM drawing. Vacuum gauges, oil level indicator site glass, compound gauge, and provision for dry gas insertion are often installed off of a common piping system. It is helpful to make vacuum connections as short as possible. There should be no low spots in hoses that could trap condensation. Operators may also want to consider the use of an auxiliary vacuum pump on larger transformers so that the vacuum pump utilized with the vacuum oil purification system maintains the maximum efficiency for the purification system (Figure 22.7).

22.4.2.3 Determination of Dryness

One of the critical parameters for vacuum processing is determining the moisture content of the transformer insulation material. There are several ways to determine the dryness of the unit including the following:

- Direct measurement of insulation by means of Karl Fischer titration of samples
- Dielectric response measurement
- Dew point measurement

www.EngineeringEbooksPdf.com

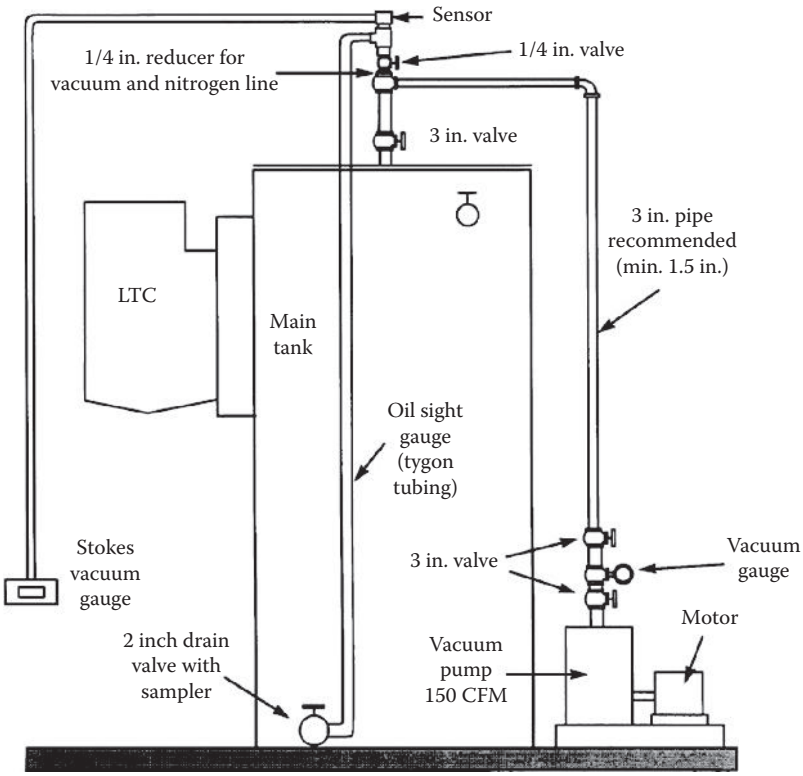

FIGURE 22.7 Typical vacuum setup.

Because of practical limitations of the first two methods, dew point measurement is the most commonly used method of assessing insulation dryness. Cold trap measurements can also be utilized to measure the amount of moisture extracted from the transformer insulation. However, cold traps do not provide for a measurement of the moisture content remaining in the insulation structures. Field experience in correlating moisture extraction rates with dew point measurements can provide an estimate of surface moisture when some information is known with regard to insulation temperatures and insulation mass through the use of theoretical equations related to phase states of matter, chemical phase diagrams, and ideal gas laws.

The principle for a dew point measurement is that the surface moisture of the insulation in an enclosed system will reach a state of equilibrium with the surrounding gas. Several sources indicate this equilibrium time is reached in 12–24 h. To perform a dew point measurement,

- Introduce dry gas into transformer to a pressure of 3–5 PSIG and allow transformer to remain undisturbed for a period of 12–24 h depending on OEM specification.
- Measure dew point of the gas.
- Record tank pressure.
- Accurately record insulation temperature. Most operators will utilize the gas exhaust temperature as representative of the insulation temperature. However, if temperatures are recorded in the afternoon with direct sunlight heating the tank, the gas temperature may be elevated above insulation temperature. Conversely, if a dry out or heat cycle was performed prior to dew point measurement, the insulation temperature could still be above the gas temperature. In the event that accuracy of insulation temperature is questionable, an operator can directly measure temperature with a thermocouple or by performing a winding resistance test and correcting resistance value based upon temperature if certified test values are known.

www.EngineeringEbooksPdf.com

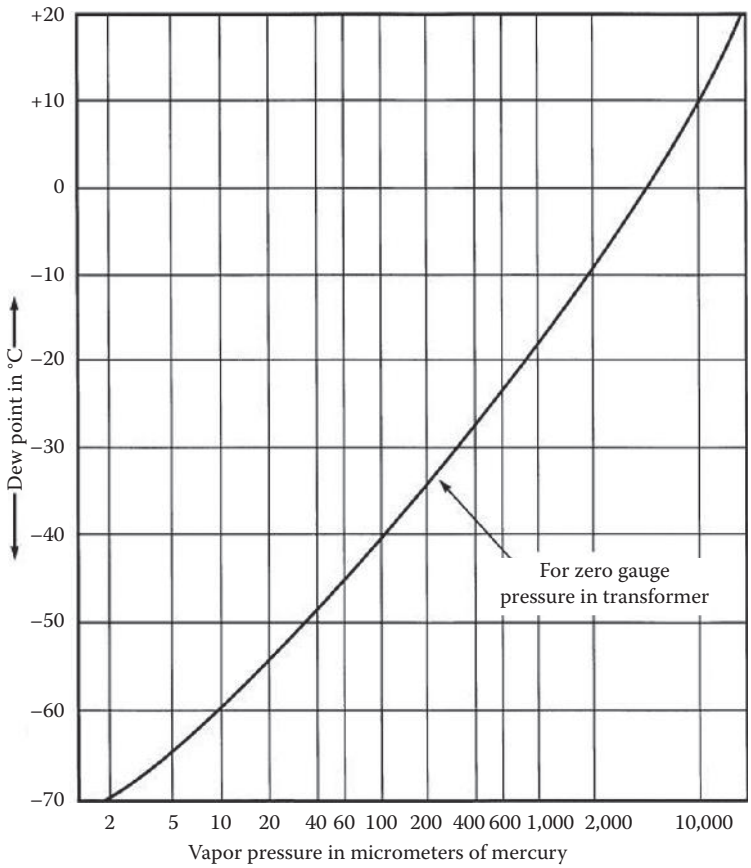

FIGURE 22.8 Dew point to vapor pressure conversion chart. (Courtesy of Waukesha Electric Systems, Waukesha, WI.)

Once the dew point is determined, it is necessary to convert the dew point value to vapor pressure. This can be accomplished through the use of dew point chart published in Appendix B of *IEEE C57.93-2007 Guide for Installation of Liquid-Immersed Power Transformers* [1] or the chart found in Figure 22.8.

If the dew point measurement was recorded with positive tank pressure, the vapor pressure needs to be corrected to tank pressure prior to determination of moisture content according to the following formula:

Vapor pressure correction

$$V_C = V_P \frac{(14.7 + T_P)}{14.7} \tag{22.1}$$

where

V_C is the corrected vapor pressure
V_P is the measured vapor pressure from chart
14.7 is the atmospheric pressure at sea level in PSI
T_P is the tank pressure (gauge) at time of measurement

Utilizing the corrected vapor pressure, it is then possible to calculate the moisture content utilizing the measured insulation temperature and the Piper curve found in Figure 22.9.

Most OEMs will publish an acceptable moisture content limit in the range of 0.5%–1% of the dry weight of the insulation. Should the moisture content be above the published limit of the OEM, it will

www.EngineeringEbooksPdf.com

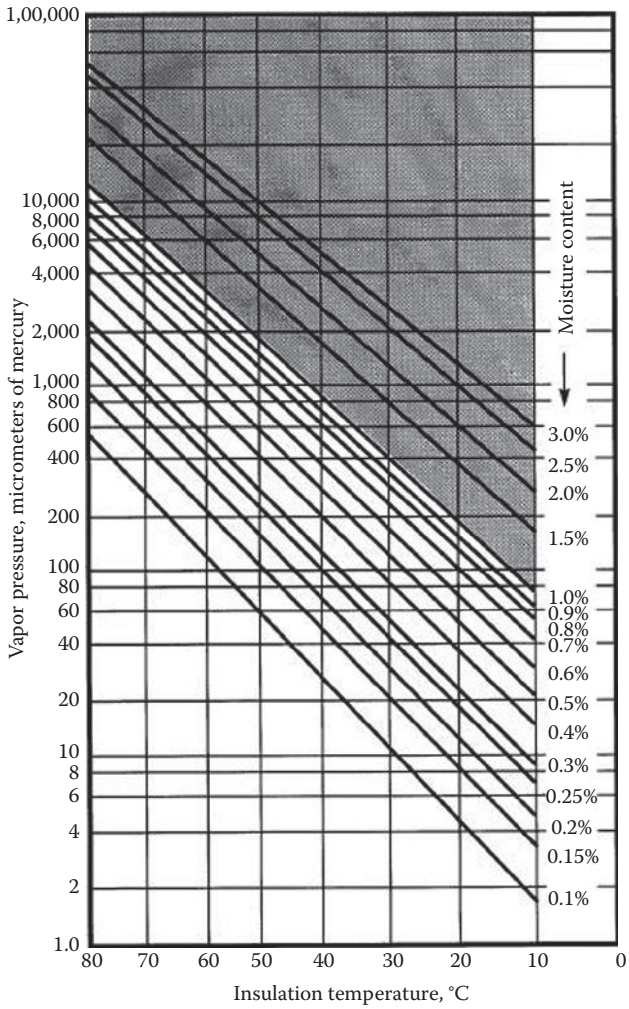

FIGURE 22.9 Vapor pressure–moisture content conversion chart. (Courtesy of Waukesha Electric Systems, Waukesha, WI.)

be necessary to take actions to dry the insulation system prior to proceeding with vacuum filling operations. Field dry out methods are discussed in Section 22.7.5.

Note: At cold temperatures below the freezing point of water (0°C), the reliability of the dew point/frost point measurement is significantly diminished as special considerations are needed for the calculation of moisture content.

22.4.2.4 Tightness Checks

Leaks in the transformer tank can be detrimental to the vacuum filling operation, as atmospheric air drawn into a transformer will rapidly expand releasing moisture that could condense on paper insulation. Therefore, prior to starting vacuum operations, it is advisable to perform a pressure test of the unit to verify all joints and connections made at assembly are tight. It is recommended that a dry gas pressure of 5 PSI be applied to the transformer. Tank pressure should be monitored for a period of 4–24 h, depending upon OEM specification. All joints can be checked with a suitable leak detector.

www.EngineeringEbooksPdf.com

TABLE 22.1 Vacuum Leak Rate Acceptance Criteria

Tank Oil Volume (gal)	Maximum Allow Leak Rate (mm of Hg in 20 min)
Less than 5,000	0.80
5,001–7,500	0.53
7,501–10,000	0.40
10,000–12,500	0.32
12,501–15,000	0.27
15,001–17,500	0.23
17,501–20,000	0.20
20,001–22,500	0.17

Additionally, the configuration and containment method of some gasketing is more susceptible to leakage under vacuum. For this reason, several OEMs also recommend the performance of a vacuum leak test. If the transformer is tight and there is no significant volume of surface humidity and/or residual gas, the residual pressure should not appreciably increase. Most OEMs represent the maximum allowable leak rate in a formula based upon the volume of transformer tank or a maximum leak rate chart.

A suggested procedure for vacuum leak detection would be as follows:

- Evacuate the tank until the pressure is below 2 Torr.
- Isolate the vacuum pump from transformer. Wait 10 min and then take a first pressure reading. This reading is called P1.
- Take a second pressure reading 30 min later. This reading is called P2.
- Record the total quantity of oil required on transformer nameplate in gallons (V).

Typically, the OEM will provide an acceptable leak rate based upon volume of tank by a leak rate equation such as $(P2 - P1) \times V <$ OEM limit or in tabular form as found in Table 22.1.

Any leaks that are present should be repaired prior to proceeding with vacuum filling operations. If vacuum leak rate cannot be achieved, but the leak rate is decreasing during each vacuum leak test, and there is no indication of physical leaks, this may indicate out gassing of the transformer insulation due to excessive surface moisture or residual gas content. The transformer may require additional drying to correct this problem.

22.4.3 Cold Weather Processing

Vacuum processes are ineffective when the insulation temperature approaches the freezing point of water. Therefore, consideration must be given in these circumstances to the necessity to increase the insulation temperature to allow for effective moisture removal.

A suggested method for elevating the insulation temperature would be to evacuate transformer to a vacuum level of 10 Torr or less. While maintaining vacuum level on transformer tank, introduce suitable transformer oil processed through vacuum purification system into a spray nozzle system or through upper filter press valve on transformer. The inlet temperature of the oil should reach 70°C ± 5°C. Continue to admit oil into the transformer until there is an adequate quantity of oil to establish a closed loop circulation by connecting the inlet of vacuum purification system to transformer drain value and drawing oil from drain valve and pumping back into spray system or upper filter press valve of transformer. Continue this process until the oil outlet temperature from transformer tank reaches a minimum of 10°C. It is often helpful to utilize thermal blankets or insulation material to tarp the unit to help retain heat. Auxiliary oil heaters are often used in conjunction with vacuum processing system to aid in the introduction of heat. Once the minimum outlet temperature of 10°C has been obtained, drain oil from transformer displacing the oil with dry gas. Once drained, vacuum operations can be started.

www.EngineeringEbooksPdf.com

22.4.4 Vacuum Process

Provided that the insulation temperatures allow effective removal of moisture from the insulation structures and the OEM criteria for insulation dryness and leak rate have been satisfied, vacuum processes can begin. The vacuum level and duration specified by the OEM are based upon the design of the insulation system, factory processes, and exposure associated with field assembly of the transformer.

Some OEMs may not require a determination of dew point as part of their process specification; however, vacuum durations and vacuum levels may be greatly extended to assure that any surface moisture is removed. Additionally, EHV transformers have tighter tolerances and more insulation mass; therefore, vacuum duration and minimum vacuum levels may be more stringent.

OEM specifications generally contain two primary requirements which are the duration for vacuum and a minimum vacuum level that must be maintained. Generally, vacuum durations will range from 8 to 72 h and minimum vacuum levels in the range of 0.5–2 Torr. Additionally, some OEMs may have supplemental requirements if transformers are stored in dry gas for an extended period of time (greater than 90 days). Table 22.2 provides a summary of typical industry process specifications for vacuum levels, hold time, and stand time as recommended by *IEEE C57.93-2007 Guide for Installation of Liquid-Immersed Power Transformers* [1]. These guidelines can differ from specific OEM requirements.

The vacuum process is intended to be an uninterrupted process. In the event of a power loss or equipment failure, it may be necessary to restart or modify the vacuum process according to OEM instructions.

TABLE 22.2 Typical Vacuum and Filling Parameters

Voltage (kV)		69 kV and Below	138 kV	230 kV	345 kV	500 kV	765 kV
Preparation	Complete all assembly	Yes	Yes	Yes	Yes	Yes	Yes
	Dew point measurement	Yes	Yes	Yes	Yes	Yes	Yes
	Core and coil minimum temperature (°C)	10	10	10	10	10	10
	Drain all oil prior to final vacuum	Yes	Yes	Yes	Yes	Yes	Yes
	Close oil preservation system valve	Yes	Yes	Yes	Yes	Yes	Yes
	Open all cooler equipment	Yes	Yes	Yes	Yes	Yes	Yes
Vacuum	Final leak test	Yes	Yes	Yes	Yes	Yes	Yes
	Absolute pressure maximum (Torr)	1	1	1	1	1	1
	Vacuum hold time (h)	12	24	24	48	48	72
Oil filling	Fill from top or bottom	T/B	T/B	T/B	T/B	T/B	T/B
	Oil temp minimum (°C)	50	50	50	50	50	50
	Oil temp maximum (°C)	80	80	80	80	80	80
	Degasser required or filter press only	D/F	D/F	D/F	D	D	D
	Vacuum during filling maximum (Torr)	1	1	1	0.75	0.5	0.5
	Rate of filling, GPM maximum	30	30	30	30	30	30
	Oil recirculation, number of passes	2/3/4	2/3/4	2/3/4	2/3/4	2/3/4	2/3/4
	Minimum stand time (h)	48	48	48	60	72	96

www.EngineeringEbooksPdf.com

22.4.5 Filling Process

While most OEMs require the use of vacuum purification equipment to process the transformer oil, some OEMs will allow the use of filter presses with particulate filters for lower voltage installations (230 kV and below).

Filling locations, fill rates, temperature, vacuum, and recirculation requirements are specified by the OEM to assure properly processed insulating fluid as well as properly impregnated cellulose insulating materials.

Some OEMs will specify filling from top cover of the transformer. When filling from the top cover, the surface area of the transformer oil is increased when the oil enters the transformer tank allowing for additional oil dehumidification when subjected to the transformer tank vacuum. When utilizing a filter press to fill, this is the only process by which the moisture content of the oil will be lowered, unless moisture-absorbing filter cartridges are employed. Therefore, the filling flow rate is generally lowered to assure proper dehumidification since a vacuum purification system is not employed. On EHV transformers, all OEMs require the use of the vacuum purification systems. Several of the OEMs will also change the filling location to the bottom drain valve since the oil is processed prior to entry into the tank and requires no further dehumidification. Filling from the bottom minimizes the creation of small bubbles in the insulation as well as provides for maximum exposure of insulation surfaces without an oil film impeding any release of water and gas vapor from the cellulose insulation.

Once the vacuum duration has been fulfilled, it is permissible to begin the oil filling process. Prior to admitting any oil into the transformer, it is advisable to have each tanker tested for general chemistry properties to validate that no contamination has been introduced in the transportation to job site. Oil refinery certificates of analysis are often limited to the storage tank and not taken after delivery tanker loading. For the field verification tests, suggested limits for new oil prior to vacuum oil processing are listed in Table 22.3.

Once oil criteria have been verified, oil can be admitted to the transformer while maintaining specified vacuum level on the transformer tank. The oil is admitted via an upper filling valve or lower filling valve as specified by manufacturer. The filling line should be equipped with a bleed connection at the fill location so that any air in the filling hoses can be vented prior to opening fill valve on transformer. Additionally, the operator should validate that the fill valve location has positive pressure. This can be accomplished by placing a compound gauge on a T-connection at fill location. If negative pressure exists, leaks from the filling hoses or piped connections could be introduced into the transformer. If negative pressure exists, the fill valve should be throttled until the pressure is above zero gauge.

The filling rates are generally governed by OEM specification either to a maximum flow rate in GPM or a liquid level change in a prescribed length of time (i.e., 1 in./min). These limits are specified to facilitate proper exposure for processing of oil and insulation. The OEM will often specify a minimum inlet temperature of the oil entering the transformer. Typically, the inlet oil temperature is required to be above 50°C.

For sealed system or a nitrogen-blanketed system, vacuum is maintained until the oil reaches proper oil level as viewed on liquid level gauge. At this point, the oil filling process is stopped, and the vacuum pump is isolated from transformer. Vacuum is then displaced by pressurizing the gas space with dry

TABLE 22.3 General Chemistry Acceptance Criteria for New, Unprocessed Oil

Test	Value
Dielectric strength, ASTM-D1816 with 2 mm gap	35 kV, minimum
Moisture content, ASTM-D1533	25 ppm, maximum
Interfacial tension, ASTM-D971	40 dyn/cm, minimum
Power factor at 25°C, ASTM-D924	0.05%, maximum

www.EngineeringEbooksPdf.com

nitrogen to a pressure of 2–5 PSIG. The oil level should be checked via direct measurement to assure that it is at the proper level. OEMs will generally provide temperature correction guidelines to allow for proper consideration of oil expansion at various temperatures (i.e., the normal oil level may change 1 in. for every 5°C of average oil temperature above 25°C, and the oil level at 25°C is to be 10 in. from the highest point on transformer cover).

For conservator systems, filling is continued until the oil level reaches 6–8 in. from the cover. The use of thick-walled Tygon tubing can serve as level indicator when connected from lower tank valve connection to valve provision on cover of unit. This shall provide a visual indication of oil level while filling. When the oil level nears cover, the vacuum pump is isolated from the transformer to prevent introduction of transformer oil into the vacuum pump. At this point, some OEMs indicate that the vacuum can be displaced with dry gas while others will direct that the vacuum be displaced by oil. If gas is utilized to break the vacuum, the gas will be absorbed into the oil, and a unit filled in this manner will have higher dissolved gas concentrations unless oil circulation processes are employed. If oil is utilized to break vacuum, the operator should utilize a compound gauge to measure the tank pressure. Once the tank pressure reaches 0–2 PSIG, the conservator system can be filled according to manufacturer's instructions.

After conservator system is filled, the oil level should be measured via a dipstick through the air cell breather opening to assure that oil level is proper for the average oil temperature. Temperature correction guidelines can be found in the OEM manual (Figure 22.10).

Once transformer is full, some OEMs, especially for EHV transformers, will require an oil circulation process to assure full dehumidification and degassing of the oil along with full oil impregnation of the insulation structures. Larger transformers can have thick insulation structures that must be fully oil impregnated for proper dielectric performance. As shown in Figure 22.11, the depth of oil impregnation is governed by time and temperature of the oil.

The oil circulation is accomplished by circulating oil from the bottom drain valve into the vacuum oil purification system and back into the upper inlet valve. Generally, the specification is to circulate a specific volume of oil. Often the oil circulation time will begin once a minimum oil exit temperature is achieved. For conservator systems, the oil circulation process should occur with the oil preservation system in operation. For nitrogen-blanketed units, the operators should perform the oil circulation process under vacuum and before activating the nitrogen system. Performing the oil circulation process with an active nitrogen system will lead to super saturation of nitrogen in oil. This could produce free gas bubble evolution during start up and jeopardize the dielectric strength of the insulating system.

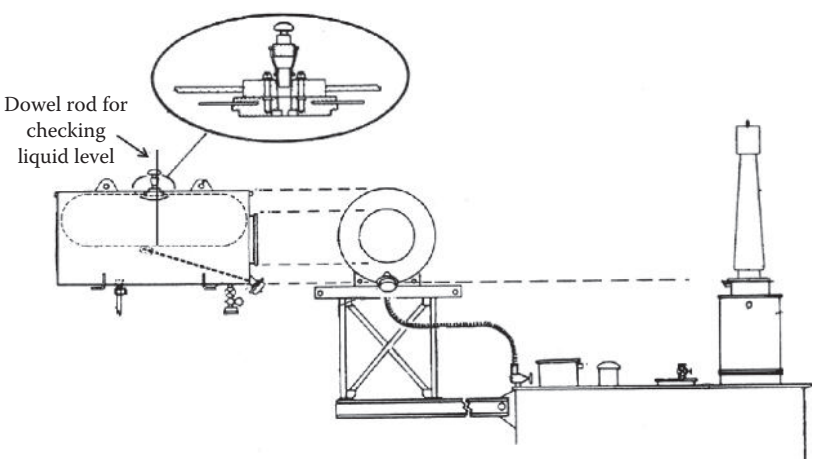

FIGURE 22.10 Conservator tank oil level indication.

www.EngineeringEbooksPdf.com

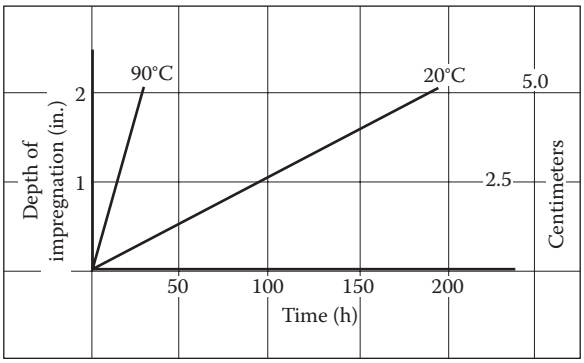

FIGURE 22.11 Insulation impregnation chart. (From IEEE C57.93-2007, *IEEE Guide for Installation of Liquid-Immersed Power Transformers*, 2007.)

After completing the filling process, all vent ports on bushing turrets, radiator or coolers, manholes, gas detector relays, fault pressure relays, or other similar devices should be bled for any trapped air pockets. All devices that were isolated for vacuum should also be reactivated.

Most of the OEMs will require a stand time after completing the oil filling operations to allow the oil to absorb any minute bubbles in the oil system and provide for full impregnation of insulation structures prior to introducing rated voltage. These stand times generally increase with rated voltage of transformer and range from 48 to 96 h in accordance with Table 22.2.

After the completion of all filling and processing requirements and according to *IEEE C57.106-2006*, *IEEE Guide for Acceptance and Maintenance of Insulating Oil in Equipment* [2], the processed oil should meet the following suggested criteria (Table 22.4):

TABLE 22.4 Criteria for New Processed Oil in New Equipment

Test	Standard	Unit	Voltage (kV)	Value
Dielectric breakdown	ASTM-D1816 W/1 mm gap	Min., kV	<69	25
			69 < 230	30
			230 < 345	32
			≥345	35
Neutralization number	ASTM-D974	Max., mg KOH/g	<69	0.015
			69 < 230	0.015
			230 < 345	0.015
			≥345	0.015
Interfacial tension	ASTM-D971	Min., dyn/cm	<69	38
			69 < 230	38
			230 < 345	38
			≥345	38
Moisture content	ASTM-D1533	Max., ppm @ 60°C avg. oil temp.	<69	25
			69 < 230	10
			230 < 345	10
			≥345	10
Power factor	ASTM-D924	Max., % @ 25°C	<69	0.05
			69 < 230	0.05
			230 < 345	0.05
			≥345	0.05

www.EngineeringEbooksPdf.com

22.5 Acceptance Testing

After transformer has been filled with oil and processing has been completed, final acceptance testing should be completed to verify transformer is ready for energization. In performing the acceptance testing, the test plan should call for all alternating current (AC) testing to be completed first followed by direct current (DC) tests. Conducting DC tests first may result in some residual magnetism in the core and require demagnetization of core in order to achieve acceptable test results.

If preliminary tests recommended in Section 22.3.9 have not been completed, these tests should be completed at this time. The following tests are recommended as part of the acceptance process.

22.5.1 Bushing Power Factor Test

Bushing insulation power factor testing is done for detection of moisture or foreign contamination in the bushing insulation structure and damage or excessive contamination to external surfaces.

An insulation power factor bridge is used to measure power factor and capacitance of condenser type bushings. The test voltages are determined by bushing design and construction; however, commercially available power factor bridges are typically limited to a test voltage of 10 kV.

Testing is highly susceptible to temperature, humidity, and contamination, and readings should be corrected to standard temperature of 20°C for comparison to past and future tests.

There are two typical test configurations for testing of bushing. The C1 configuration tests the capacitive layers from the bushing conductor to the test tap, and the C2 configuration tests the outer capacitive layers to the ground flange (Figure 22.12).

The standard acceptance limit for bushings is 0.5% when corrected to 20°C. However, there are new resin impregnated condenser bushings whose initial value may be greater than 0.5%. It is recommended that the readings be compared to nameplate values, and bushings should be replaced when the measured power factor doubles the nameplate value or capacitance is in excess of 110% of the nameplate value.

Typical maintenance test limits are classified as follows:

- Good: <0.5%
- Deteriorated: 0.5%–1.0%
- Investigate: >1.0%

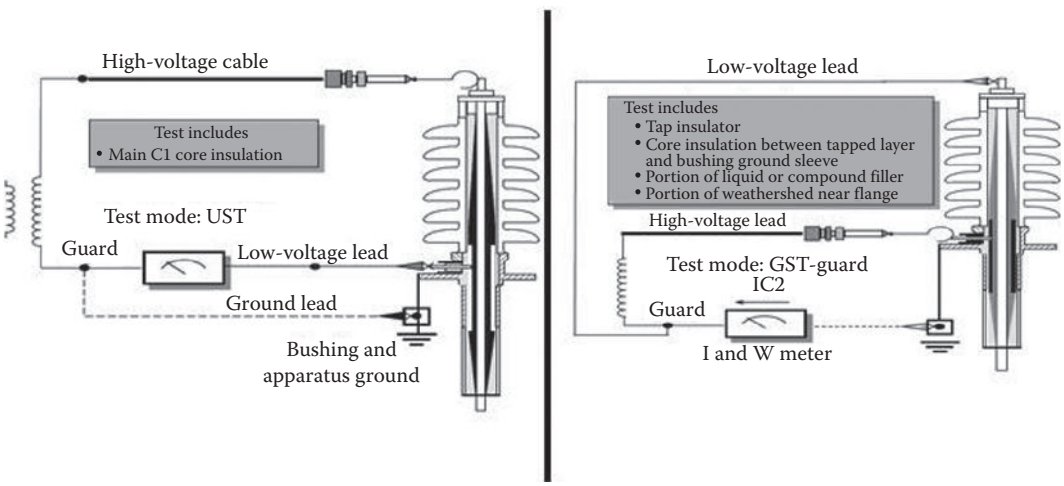

FIGURE 22.12 Bushing C1 and C2 tests.

www.EngineeringEbooksPdf.com

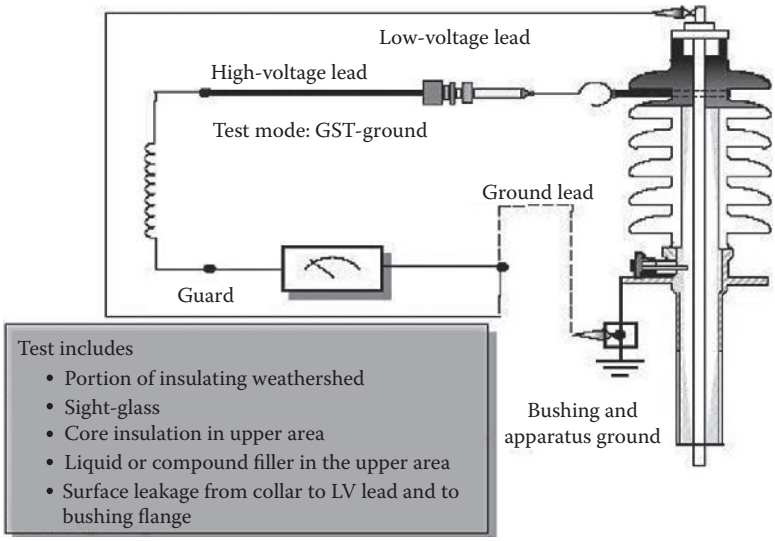

FIGURE 22.13 Bushing hot collar test.

For bushings that are not constructed with a condenser, the acceptance test is a hot collar test. For this test, the expectation is that the watts loss measurement is similar between bushings of the same style and is typically less than 0.1 W (Figure 22.13).

22.5.2 Core Insulation Resistance

To validate insulation integrity of core from ground potential and to check for inadvertent core grounds, insulation resistance or megger tests should be performed for core resistance.

Using megger instrument, 1000 V is applied for 1 min to core ground strap. Some transformers may have multiple core grounds and/or a separate core clamp/end frame ground. Each core and clamp ground should be tested independently along with any preventative autotransformer or series transformer associated with LTC circuit. Some shell-form transformers may be constructed such that core ground strap is not accessible.

The test is sensitive to temperature, moisture, and contamination, and the measured test values will be different in air and oil. The minimum acceptable test value is 100 MΩ when corrected to a standard temperature of 20°C.

22.5.3 Current Transformer Testing

The current transformers should be tested for proper ratio, excitation, and polarity. The current transformers can be tested via primary current injection or by secondary voltage injection method. Each ratio connection on a multi-ratio current transformer should be checked. The measured ratio should be within 0.5% of nameplate ratio of the current transformer. Polarity is verified by battery polarization or a buck/boost circuit.

22.5.4 Transformer Turns Ratio

A transformer turns ratio test should be performed to verify proper connection of bushing leads, winding configuration, and proper operation of the DETC and LTC. The transformer turns ratio should be done in all DETC tap positions with LTC in neutral and with DETC in rated position and in each LTC tap position.

www.EngineeringEbooksPdf.com

The test is conducted using low-voltage ratio bridge or a three-phase power supply and voltmeters. Voltage is applied to the primary winding, and the voltage is measured on a secondary winding. The measured ratio should be within ±0.5% of the calculated transformer nameplate ratio. When utilizing a three-phase ratio bridge, it is also possible to verify the correct phase displacement of the transformer.

22.5.5 Winding Power Factor

Winding insulation power factor tests are recommended to test the quality of the insulation structure, detect changes in geometrical configuration of windings, detect damage to ground and static shields, and check for the presence of water or other contaminates. Tests should be conducted according to Doble Engineering test methodology for the type and winding configuration of transformer under test. The test is highly susceptible to temperature, humidity, and contamination, and the measurements must be corrected to standard temperature of 20°C for comparison to past and future tests.

The test voltage is typically 10 kV but may be reduced if the line-to-ground voltage of the winding under test is less than 10 kV. Typically, all terminals of each individual winding are shorted together during test (Figure 22.14).

The standard acceptance limit for new transformer windings is 0.5% when corrected to 20°C.

For maintenance testing, the following limits are defined by Doble Engineering:

- Good: <0.5%
- Deteriorated: >0.5% but <0.7%
- Investigate: >0.5% but <1.0% and increasing in value
- Bad: >1.0%

For transformers filled with natural ester fluids, the winding power factor measurement will often be two to four times higher than transformers filled with mineral oil due to differences in the conductivity and permittivity of the fluid.

22.5.6 Winding Excitation

Winding excitation tests are recommended to detect any changes in the magnetic circuit or the presence of shorted winding turns.

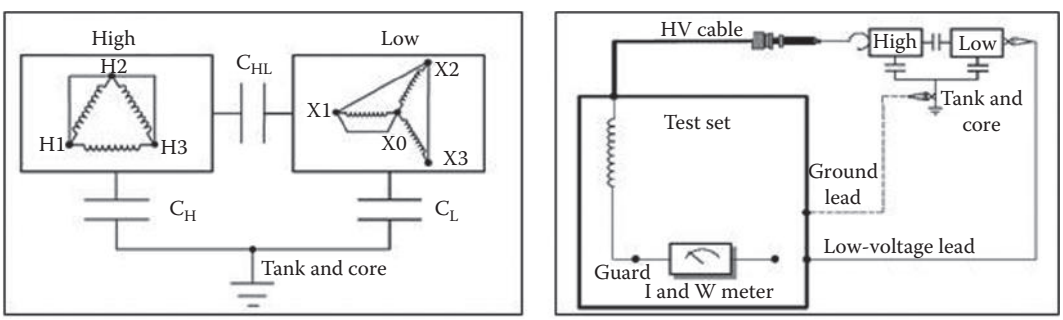

Test	Energize	Ground	Guard	Measure
1	H	L	—	$C_H + C_{HL}$
2	H	—	L	C_H
3	L	H	—	$C_L + C_{HL}$
4	L	—	H	C_L

FIGURE 22.14 Winding power factor measurement of two-winding transformer.

www.EngineeringEbooksPdf.com

Test No.	Test Mode	Energize	UST	Ground	Float	I_e
1	UST	H_1	H_0	*	H_2H_3, $X_1X_2X_3$ ($Y_1Y_2Y_3$)	H_1–H_0
2	UST	H_2	H_0	*	H_1H_3, $X_1X_2X_3$ ($Y_1Y_2Y_3$)	H_2–H_0
3	UST	H_3	H_0	*	H_1H_2, $X_1X_2X_3$ ($Y_1Y_2Y_3$)	H_3–H_0

* Normally grounded terminal(s) of the X and/or Y windings must be grounded.

Test No.	Test Mode	Energize	UST	Ground	Float	I_e
1	UST	H_1	H_2	H_3*	$X_1X_2X_3$ ($Y_1Y_2Y_3$)	H_1–H_2
2	UST	H_2	H_3	H_1*	$X_1X_2X_3$ ($Y_1Y_2Y_3$)	H_2–H_3
3	UST	H_3	H_1	H_2*	$X_1X_2X_3$ ($Y_1Y_2Y_3$)	H_3–H_1

* Normally grounded terminal(s) of the X and/or Y windings must be grounded.

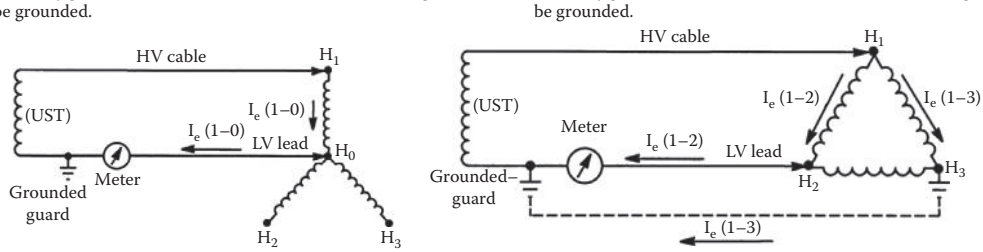

FIGURE 22.15 Winding excitation tests for wye and delta connections.

Field tests should be conducted according to Doble Engineering test methodology for the type and winding configuration of transformer under test. The test is typically conducted single phase with a test voltage of 10 kV applied to the primary winding. This is a repeat test, so it is important that for comparative purposes, the applied test voltage is the same for all tests. The test should be done in all tap combination of DETC and LTC positions, if equipped. All windings are left floating for the test with the exception of terminals that would normally be grounded while in service (Figure 22.15).

This test is a comparison test, and test values will vary between transformers based upon size and construction of unit. A typical three-leg transformer construction will result in a two high, one low pattern where A and C phase current values are higher with B phase currents typically 65%–70% of the measured value of A and C phase. Shell-form and five-leg core-form designs may have different excitation current patterns where exciting currents are nearly equal. Transformers that have LTCs with a reactor/preventive autotransformer will have different current patterns in bridging and nonbridging positions.

Residual magnetism has a dramatic effect on the ability to get valid excitation results, and it may be necessary to demagnetize the core to get valid test results.

22.5.7 Insulation Resistance

Insulation resistance tests, commonly called megger tests, prove insulation integrity between windings and between the winding and ground potential. Severe contaminants or insulation failure can be detected, and the measurement of polarization index (PI) can detect changes in insulation structure over time. The test is sensitive to moisture, temperature, and contamination.

A test voltage 1000–5000 V is applied for 1 min between windings and between windings and ground. If PI measurement is required, test voltage must be applied for 10 min in each test configuration. Insulation resistance measurements are made at the end of 1 and 10 min. PI is simply the ratio of the 10 min reading divided by the 1 min reading.

Results must be corrected to a standard test value and should be compared with factory test results. Generally, test values should exceed 1000 MΩ when corrected to 20°C. Due to differences in the properties of the fluid, transformer filled with natural ester fluids will have significantly lower insulation resistance values when compared to mineral oil–filled transformers.

www.EngineeringEbooksPdf.com

TABLE 22.5 PI Rating of Insulation System

Insulation Condition	PI
Dangerous	<1.0
Poor	1.0–1.1
Questionable	1.1–1.25
Fair	1.25–2.0
Good	>2.0

According to data published by Megger Corporation, insulation systems for liquid-filled transformers as categorized by PI per Table 22.5.

22.5.8 Frequency Response Analysis

Frequency response analysis (FRA) measurements are becoming a common test for acceptance testing of transformer. This is a nondestructive test that helps evaluate the mechanical condition of the active part assembly of the transformer. This test is very beneficial for detection of winding movement, core shifting, and short-circuit damage.

FRA tests consist of measuring the transfer function of the transformer windings over a wide range of frequencies and comparing these electrical responses to a known reference set taken at the time of transformer manufacture.

There are two commercial methods available today which include an impulse method which consists of injection of a low-voltage impulse and the sweep frequency method which consists of injecting a sinusoidal signal across a frequency band. It is important to specify the test method when doing FRA measurements and to maintain the same test methodology on all subsequent tests as the two methods are not directly comparable. It is also important that the transformer be in the same tap positions and same assembly configuration for each test. Transformers will have different response curves when tested oil filled and when tested without oil; therefore, if a user plans to use this test as a receiving test at receipt of transformer, tests should occur in the manufacturing facility just prior to shipment utilizing the same test bushings and without oil in the tank.

The test produces a series of transfer function curves that can be overlaid to a prior test result to determine if there has been some mechanical change which impacted the impedance and capacitance of the active part assembly. Such physical movement will produce changes in the resonant frequencies and amplitude of the transfer function.

In analyzing a transfer function utilizing the sweep frequency method, we note that in the low frequency range, the transfer function is most affected by core deformation, shorted winding turns, and residual magnetism. In the mid-frequency range, the transfer function is impacted by bulk winding movement, such as shifting on a core limb or rotation of phase assembly, or loss of axial coil clamping. In the high frequency ranges, the transfer function is impacted by axial and radial movement of an individual coil. At the highest frequency range, the transformer is impacted by capacitance of bushings, and the stray capacitance of line leads to adjacent ground planes (Figure 22.16).

In interpreting results, one expects that a transformer in good condition will have good correlation with a baseline test with regard to the resonant frequencies and magnitude of the transfer function (Figure 22.17).

22.5.9 DC Winding Resistance

The DC winding resistance test is done to verify internal connections and to detect any open or poor connections. The test is very sensitive to temperature, and results must be corrected to standard temperature for comparison. This test is also the primary contributor for magnetization of the core, so it should be the last acceptance test completed.

www.EngineeringEbooksPdf.com

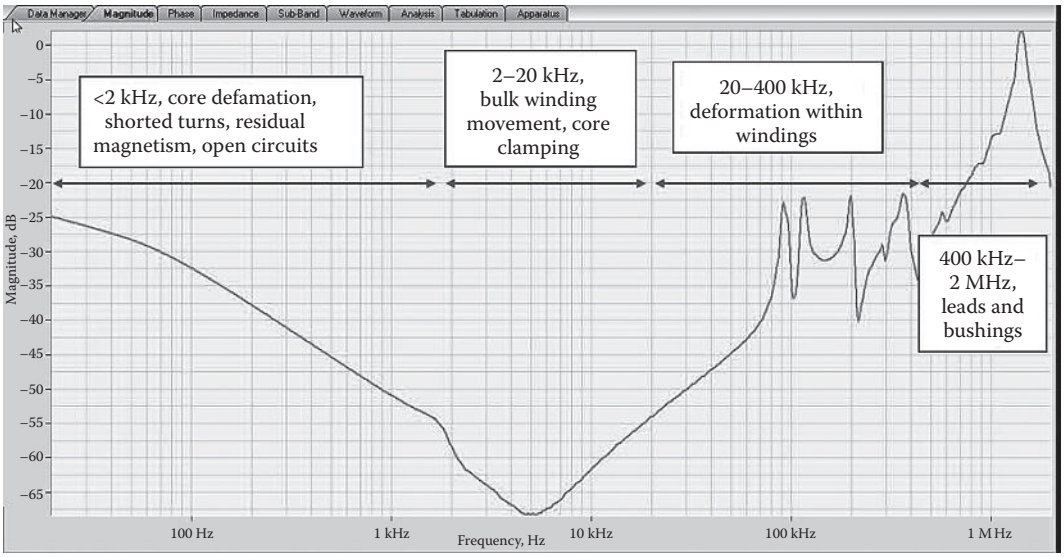

FIGURE 22.16 Sweep frequency analysis open-circuit transfer function.

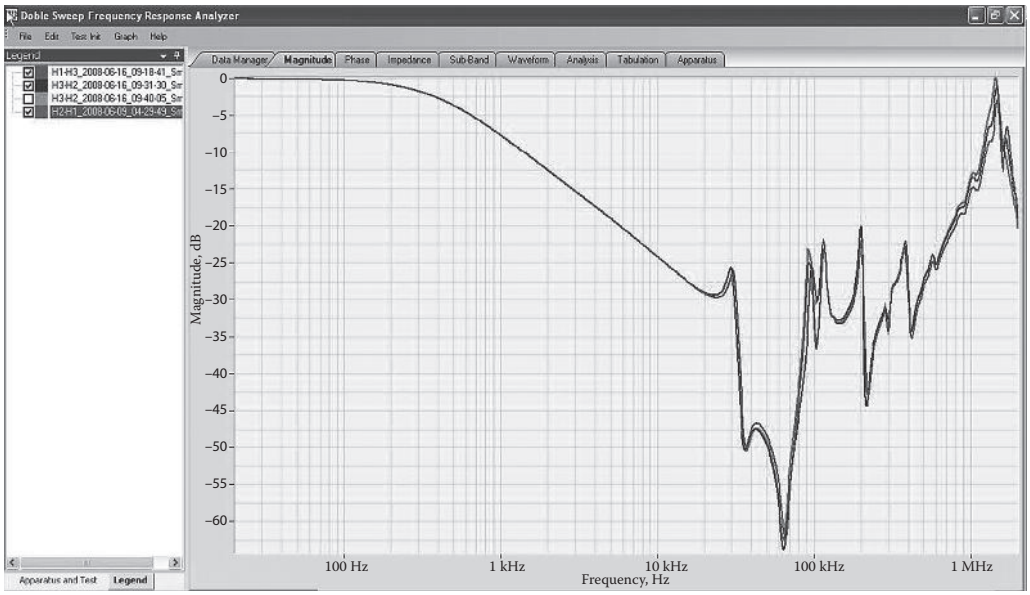

FIGURE 22.17 Sweep frequency analysis short-circuit transfer function of three windings.

The test is completed using Wheatstone or Kelvin bridge to measure the resistance of the transformer winding. The test is generally performed single phase on each section of a winding. When making test setup, the voltage potential leads should be placed inside the current source leads, so the test leads do not effect measurement. It is recommended that one end of winding under test be grounded while the other terminals can float (Figure 22.18).

For wye-connected windings, the three-phase equivalent is the sum of each individual phase measurement. For a delta-connected winding, the individual phase measurement is equal to 1.5 times the measured reading. The equivalent three-phase measurement is equal to the sum of the three individual phase measurements.

www.EngineeringEbooksPdf.com

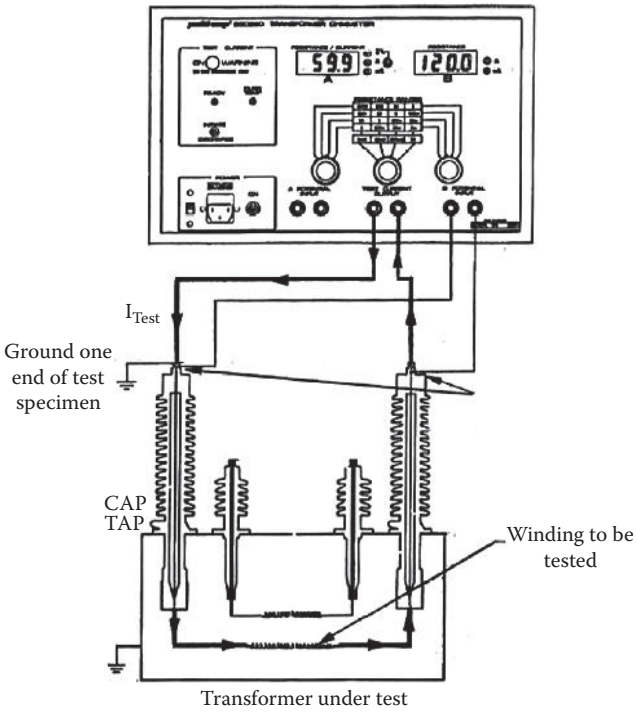

FIGURE 22.18 DC winding resistance test. *Note:* Potential leads must be connected below current connection to avoid influence of lead resistance.

A transformer that has an LTC with a preventative autotransformer/reactor will show different resistance values between bridging and nonbridging positions when a reactor is incorporated into an LTC circuit.

As previously mentioned, the measured resistance values must be corrected to a standard temperature which is 75°C for a 55°C rise transformer and 85°C for a 65°C rise transformer.

Allowing for the differences in the coefficient of resistive for the different winding materials, the temperature equations for 55°C can be found in the following text:

Winding resistance correction for copper winding

$$R_{75} = \frac{R_T(234.5+75)}{(234.5+t)} \tag{22.2}$$

where

t is the test temperature in °C

R_T is the test resistance

Winding resistance correction for aluminum winding

$$R_{75} = \frac{R_T(228.1+75)}{(228.1+t)} \tag{22.3}$$

where

t is the test temperature in °C

R_T is the test resistance

www.EngineeringEbooksPdf.com

22.5.10 Control Device Verification

22.5.10.1 Thermal Devices

For transformers furnished with thermometers for measuring oil and winding temperatures, the settings for the alarm contacts are made according to established customer standards or, in the absence of such preexisting standards, are set at 80°C for oil temperature and 95°C for winding temperature.

Thermometer contacts, used for starting oil pumps and fans on transformers cooled by forced circulation, are generally set for 60°C if the cooling is actuated by the oil temperature or 75°C if cooling is actuated by the winding temperature.

Temperature device set points and indications can be checked against a standard reference such as a thermocouple calibrator. The devices are typically guaranteed to be within ±3% of full-scale reading for the particular thermometer.

22.5.10.2 Other Indicators

It is advisable that all indicators such as pressure relief devices, fault pressure relays, pressure vacuum bleeders, sudden pressure relays, gas detector relays, flow gauges, and monitoring devices be tested before energizing the transformer. Follow instructions that are provided by the manufacturer for these devices. Check that all alarm and trip signals annunciate properly at designated terminal points in control cabinet.

22.5.11 Oil Testing

Dissolved gas-in-oil tests should be taken to confirm the absence of dissolved combustible gas at energization. General chemistry testing should also be completed, and oil quality should meet OEM requirements or requirements listed in Table 22.4.

22.6 Transformer Energization

Upon completion of assembly, oil filling, and acceptance testing and after observing the proper stand time after completing the oil filling operations, the transformer can be energized. The energization process can vary between manufacturers; however, utilizing recommendations contained in *IEEE Guide for Installation of Liquid-Immersed Power Transformer, C57.93-2007* [1], it is suggested that prior to energizing transformers, the following criteria should be verified:

- Electrical and oil tests have been completed and have met minimum standards.
- Stand time after oil filling has been met.
- Cooling and LTC, if equipped, controls have been set to automatic operation.
- All temporary grounds and shorting wire have been removed.

The transformer can then be energized with no load from either the high-voltage or low-voltage side. If possible, it is recommended that voltage be raised in increments. After energization, it is recommended to energize transformer at no load in accordance with Table 22.6.

TABLE 22.6 Suggested Minimum Energization Period with No Load

Voltage Class (kV)	Energizing Period (h)	Suggested Minimum Energizing Period (h)
230–800	24	12
120–170	12	8
<120	8	8

www.EngineeringEbooksPdf.com

During the energization period without load, it is recommended that close observation of the transformer be made for the following:

- Excessive audible noise
- Check of liquid temperature, winding temperatures, and ambient temperature
- Check of tank pressure
- Check of oil level indicators
- Check of gas detector relay

After the period of the energization without load, it is then permissible to begin loading transformer up to the limits of the nameplate rating. Within the first month of operation, a dissolved gas analysis (DGA) sample should be taken for baseline analysis.

22.7 Transformer Maintenance

The primary objective of transformer maintenance procedures is to control the factors which accelerate transformer aging as well as detect and correct any mechanical, thermal, and electrical failure mode that might limit the functionality of the transformer.

Of critical importance to the aging and life expectancy of the transformer is the condition of the insulation system. The insulation system is typically constructed of organic products, including mineral oil, cellulose paper, and cellulose pressboard.

The organic products in the transformer degrade with time and eventually can no longer withstand the mechanical and dielectric stresses which often lead to transformer failure. It is not possible to eliminate the aging process, but good maintenance practices which control the aging factors can help prolong the serviceable life of the transformer. The primary factors which contribute to the degradation process of the organic materials are the following:

- Temperature
- Moisture
- Oxygen
- Acidity

By assuring proper operation of the cooling and oil preservation systems and by maintaining good fluid quality, it is possible to prolong the life of the transformer.

Transformer maintenance activities can be carried out on a periodic basis or performed based upon condition. On a periodic basis, the frequency of inspections will be varied based upon the size and type of transformer and the various accessory devices that may be installed. Minimum frequency intervals can be provided by the manufacturer of the equipment or can be found in various industry guidelines. Condition-based maintenance is typically triggered by the experience of the user based upon the results of inspection, testing, oil analysis, or readings from monitoring equipment that indicate an abnormal or deteriorating condition.

22.7.1 Recommended Maintenance Schedules

The International Electric Testing Association has issued maintenance testing guidelines for liquid-filled power transformers. According to International Electric Testing Association *Maintenance Testing Specification* 2010[7], the recommended normal frequency of maintenance is the following:

- Visual inspection—monthly
- Mechanical inspections—annually
- Oil sampling—annually
- Electrical testing—biannually

www.EngineeringEbooksPdf.com

22.7.1.1 Visual Inspection

The visual inspection can be done without de-energizing the transformer and would consist of the following tasks:

1. Check and record the ambient temperature.
2. Check and record the load current and note maximum value.
3. Check and record line voltage and note any variance from rated value.
4. For transformers equipped with Sealedaire system, check and record reading of pressure–vacuum gauge. If the gauge remains at or near zero when the oil temperature varies, the transformer should be checked for leaks.
5. If transformer is equipped with Inertaire system, check and record tank and bottle pressure.
6. Check, record, and note maximum reading on all indicating instruments:
   a. Liquid level gauges of tank, bushings, and oil-filled compartments.
   b. Liquid and winding temperature gauges.
   c. If equipped, LTC operating range and number of operations.
7. Examine all fittings, radiators, and joints for signs of oil leakage.
8. Examine control cabinet:
   a. Check control circuit voltage.
   b. Check for collections of dirt, grime, water, or oil.
   c. Check for excessive heating of contacts or insulation.
   d. Check for corrosion of metal parts.
   e. Check for contact wear.
   f. Check for loose connections.
   g. Check for signs of arcing.
   h. Check for worn or broken mechanical parts.
   i. Check for excessive noise in magnetic coils.
9. If transformer is equipped with forced oil cooling, check the oil circulating pumps and note any unusual noise or flutter of the oil flow gauge. Pump phase running currents should be checked. Evidence of noise, uneven oil flow, unbalanced phase current, or heating of the pump motor may require removal of pump from the transformer.

Observed discrepancies such as low oil levels, high oil levels, high winding or liquid temperatures, loss of gas pressure in oil preservation system, leaks, or mechanical issues should be addressed and corrected.

22.7.1.2 Mechanical Inspection

For tasks included in the mechanical inspections, it would be necessary to de-energize the transformer to allow for safe access of personnel to transformer and to eliminate any potential external flashover of bushing or arresters.

1. Examine coolers or radiators for accumulation of dirt and foreign material that might impede air flow. Radiators and coolers can be cleaned with a stream of low-pressure water directed over the cooling surfaces. On FOA coolers, the water should be directed from the front side of the cooler, opposite the normal air flow, to most effectively remove any dirt and debris. Be certain fans are shut off before starting any cleaning operation. The frequency of cleaning will vary depending on the conditions at the site.
2. Examine all joints, pipe fittings, and gate valves for signs of oil leakage. Carefully examine packing gland seals. Tighten, correct, or repair any leaks.
3. Examine all bushings and interconnecting hardware for contamination or signs of electrical tracking. Clean all porcelain and any contaminated areas with soft cloth and suitable solvent.
4. Examine the pump, cooler, or radiator valves for evidence of leaking around the gland seals. Close and open the flapper arm. There should be some restriction to the flapper arm movement if the packing is properly tightened. *Caution*: Never attempt to close valve with pump in operation.

www.EngineeringEbooksPdf.com

5. Inspect all breathers and small screen openings in pressure relief devices and pressure vacuum bleeders to be sure they are clean and in operating condition:
   a. Conservator and LTC tank dehydrating breather.
   b. Conservator tank pressure/vacuum bleeder.
   c. Nitrogen or sealed system pressure/vacuum bleeder.
   d. Control cabinet air vent screens.
6. Remove expansion tank dehydrating breather and inspect oil bladder for sign of oil leakage into bag by inserting small wooden dowel rod with cloth attached to the end until slight resistance is felt at the air cell. Gently wipe dowel rod along surface of air cell. After removing, there should be no oil present on the rag.
7. Examine paint finish, particularly around welded joints and accessory items. Clean and apply tough-up primer and paint in any areas showing evidence of rust or cracking or peeling of paint.
8. De-energize the auxiliary power source and inspect the control devices in the control cabinet. Remove grease, oil, or other contaminants with a lint-free cloth moistened in a nonflammable cleaning fluid. Replace any broken or malfunctioning parts, tighten all loose connections, and eliminate any oil or water leaks into the compartment. Prior to de-energizing cabinet, an infrared scan is helpful in locating loose or overheated connections.

22.7.1.3 Annual Oil Sampling

Oil condition can provide significant analytical information on transformer condition and is an extremely valuable diagnostic tool providing information that may not be available through the visual and mechanical inspections. When transformer is equipped, sampling of LTC compartment in addition to the main tank is advised.

Oil samples should be collected in accordance with ASTM D923, and the sample shall be tested in accordance with the referenced standard:

- Dielectric breakdown voltage: ASTM D1816
- Acid neutralization number: ASTM D974
- Interfacial tension: ASTM D971
- Color: ASTM D1500
- Visual condition: ASTM D1524
- Moisture content: ASTM D1533
- Power factor: ASTM D924
- DGA: ASTM D3612

Action limits for oil reconditioning, degasification, and reclamation are discussed in Sections 22.7.3 and 22.7.4.

22.7.1.4 Biannual Electrical Testing

With transformer de-energized and isolated from the power system, performance of some of the electrical tests as was detailed in Section 25.5 provides valuable reference information regarding current conditions and potential changes in the electrical and insulation system of the transformer. Unless specifically trying to diagnose a suspected problem, it is recommended that the following tests be conducted for routine maintenance evaluation:

1. Perform insulation-resistance tests, winding-to-winding and each winding-to-ground. PI can be calculated.
2. Perform turns-ratio tests at the designated tap position.
3. Perform insulation power factor on all windings, bushings, and arresters and correct to 20°C in accordance with test equipment manufacturer's published data.
4. Perform excitation-current tests consistent with prior test methods for transformer under test.
5. Measure the resistance of each winding at the designated tap position.

www.EngineeringEbooksPdf.com

FIGURE 22.19 Infrared image of overheated bushing top terminal. (Courtesy of Waukesha Electric Systems, Waukesha, WI.)

6. If core ground strap is accessible, measure core insulation resistance at 500 V DC.
7. Prior to de-energizing transformer, an infrared scan should be made to verify any hot interconnections:
   a. Care should be taken to review temperatures at all bushing connections. Temperatures in excess of 70°C should be investigated. Nitrile o-ring gaskets used to seal the bushing terminals can easily embrittle and create an opportunity for water to enter bushing through failed gasket. Such conditions can lead to bushing failure in very short time duration (Figure 22.19).
   b. Cooling equipment should be evaluated for any blockage of radiator or cooler, failure of cooling fans, or a low oil level condition that precludes normal thermal convection flow of the oil through cooling equipment.

22.7.2 Maintenance of Components

22.7.2.1 Bushings

Statistically, failure of bushings is one of the top five reasons that transformers fail in service. Failure of a bushing can lead to severe damage to the transformer. Therefore, it is critical to properly maintain these critical components.

During the biannual testing, it is recommended that bushing porcelain be cleaned utilizing approved cleaning solvent approved by bushing manufacturer. Top terminals should be inspected for any signs of heating or tracking. Terminals should be rechecked for proper torque. Oil levels should be checked. If required, make up oil should be added in accordance with manufacturer's instructions. If equipped, bushing capacitance tap covers should be checked for sealing gasket condition and proper torque.

If electrical testing indicates a doubling of the nameplate power factor value of bushing and/or a change in nameplate capacitance value of more than 10%, it is advisable to remove the bushing from service.

22.7.2.2 Load Tap Changers

Another statistically high contributor to transformer failures is load tap changing equipment. One of the few moving components on the transformer, these devices are subject to mechanical and electrical

www.EngineeringEbooksPdf.com

stresses that necessitate periodic maintenance. LTCs come in a variety of configurations, including resistive switching, reactive switching, and vacuum switching. The LTCs can be mounted on-tank or in-tank, depending upon the manufacturer, voltage, and current limit of the switch.

The frequency of inspection and maintenance is dependent upon the number of operations, switching currents, and the type of LTC. Each manufacturer will provide suggested limits for the number of operations before doing major overhaul inspections.

22.7.2.2.1 Dissolved Gas Analysis

The resistive and reactive tap changers arc under oil and produce significant amounts of combustible gas during operation. Vacuum tap changers contain arcs within vacuum bottle and should not have combustible gases present in the LTC compartment. As a predictor of condition, DGA has become widely used to detect potential maintenance requirements of the LTC. Equipment operators can look at the ratio of the hot metallic gases to the amount of acetylene gas. This ratio is known as the Stenestram ratio, and the following guidelines can be used for interpretation of the condition of resistive and reactive LTC based upon DGA data:

22.7.2.2.2 Stenestram Ratio [(Methane + Ethane + Ethylene)/Acetylene]

- Ratios less than 0.5 show no overheating.
- Ratios between 0.5 and 5 indicate that overheating is likely occurring, and one should increase frequency of DGA analysis to a maximum of every 6 months.
- Ratios over 5 indicate the LTC should immediately be removed from service, and a maintenance inspection performed.

Vacuum tap changers should not have combustible gas present. If combustible gas is present, there is typically an abnormal condition in the LTC.

An industry guide, *IEEE Guide for Dissolved Gas Analysis in Load Tap Changers IEEE C57.139-2010* [3], has been published to give recommended action limits for performing maintenance and provides enhanced information and more discrete action limits based upon the make and model of equipment.

22.7.2.2.3 Oil Quality

It is recommended that oil quality be tested in the LTC and evaluated for continued use in accordance with *IEEE C57.106-2006 Guide for Acceptance and Maintanence of Insulating Oil in Equipment* [4], limits found in Table 22.7.

Should the oil condition be found to exceed these limits, it should be replaced or reconditioned.

TABLE 22.7 C57.106 Limits for Service-Aged LTC Oil

	Suggested Limit		
		Line End	
Test and Method	Neutral End	≤69 kV	>69 kV
Dielectric strength			
ASTM D1816			
kV minimum			
1 mm, gap	20	25	28
2 mm, gap	27	35	45
Water content			
ASTM D1533			
ppm	40	30	25
Corrosive sulfur, ASTM D1275	No corrosive sulfur in oil		

www.EngineeringEbooksPdf.com

22.7.2.2.4 Major Inspections

Major inspections of the LTC should incorporate the following tasks:

1. Before removing oil from LTC compartment,
   a. Record operation counter reading and min/max drag hand positions.
   b. Electrically operate the LTC from 16R to 16L and verify the following:
      i. Operation counter and drag hands are functioning.
      ii. End of travel limit switches operation/mechanical stops are functioning.
      iii. Measure and record drive motor current.
      iv. LTC brake operation and positioning on each step.
      v. Note any unusual sounds or sluggish operation.
      vi. Remove any desiccant breather.
2. After removing oil from the LTC compartment,
   a. Use clean, filtered dielectric oil to wash down the entire LTC mechanism.
   b. Perform initial visual inspection looking for any obvious signs of abnormal conditions:
      i. Heating/coking.
      ii. Arcing damage.
      iii. Excessive mechanical wear.
      iv. Loose/damaged parts in bottom of LTC compartment.
      v. Rust on inside of LTC tank, indicating high moisture levels.
   c. Wipe down all contacts, slip rings, contact hubs, and diverters using clean, lint-free rags.
   d. Inspect all LTC tank vents and breather ports to insure they are not plugged and are free from obstructions.
3. Internal inspection of LTC compartment:
   a. Perform complete inspection of all selector, transfer, and reversing contacts.
   b. Evaluate contact wear against replacement criteria found in the OEM manual.
   c. If possible, obtain contact spring pressure and contact resistance measurements and record results.
   d. Inspect selector, reversing, transfer (bypass or diverter) contacts looking for the following:
      i. Abnormal pitting or wear of contact surfaces.
      ii. Signs of arcing or heating.
      iii. Condition of contact springs (discoloration is sign of heating/annealing).
      iv. Proper moving contact alignment with respect to stationary contacts.
      v. Loose, damaged, or missing hardware.
   e. Measure contact resistance with low-resistance ohmmeter:
      i. Measure resistance between moving and stationary contacts on all three phases.
      ii. Compare resistance measurements from all phases, looking for consistency.
      iii. Arcing contact to arcing contact resistance should be $<250\,\mu\Omega$.
      iv. Silver-plated copper to silver-plated copper contact resistance should be $<100\,\mu\Omega$.
   f. Operate the LTC using the hand crank while observing the LTC mechanism and verify the LTC moves freely and does not bind.
   g. Inspect each end of the tap lead connections for signs of looseness and heating and condition of insulation.
   h. Inspect the condition of all gaskets and seals, looking for signs of oil leaks.
   i. Inspect the insulating components that hold moving contacts as well as barrier boards and phase panels for the following:
      i. Splits, chips, cracks.
      ii. Evidence of tracking between contacts or to ground.
      iii. Swelling or warping due to high moisture levels.

www.EngineeringEbooksPdf.com

   j. Check all shafts penetrating LTC tanks for oil leaks and galling or corrosion that could lead to binding or slow operation.
   k. Verify operation of oil level switches, pressure relief, and pressure–vacuum devices.
4. Vacuum LTCs:
   a. Inspect vacuum bottles/interrupter mechanism and verify proper operation while hand cranking the LTC.
   b. Evaluate the vacuum bottle wear as recommended by the OEM manual.
   c. Perform a hi-pot test on each vacuum bottle to verify the integrity of the bottle insulation. The leakage current should be less than 250 μA.
   d. Carefully inspect all bypass contacts for signs of arcing, indicating mis-operation of vacuum interrupter while in service.
   e. Test vacuum interrupter monitoring system to verify proper operation and the control lock-out relay and alarm are functioning properly.
5. Carefully inspect drive system for the following:
   a. Excessive gear or chain wear and/or broken gear teeth.
   b. Weak operating springs, if present.
   c. Worn or improperly adjusted mechanical brakes.
   d. Loose or worn pivot bushings or bearings.
   e. Broken or loose hardware.
   f. Proper adjustment of drive chains.
   g. Proper lubrication of drive components located outside the oil-filled LTC compartment.
   h. Inspect all couplings or mating gears for proper alignment.
   i. Inspect spring latch for excessive wear.
   j. Inspect the drive motor and capacitor for signs of overheating.
6. Carefully inspect control box and position indicator:
   a. Check all limit switches, cams switches, control switches, and brake.
   b. Check for loose or broken hardware.
   c. Check all relay and switch contacts with VOM (Volt-ohmmeter).
   d. Manually operate all control relays to verify solenoids and plungers operate freely.
   e. Check for broken heaters, lights, wires, or wire connections.
   f. Check condition of insulation on wiring.
7. Replacing contacts:
   a. Replace all contacts per OEM wear guide, as required.
   b. Check adjustment of all newly installed contacts for proper alignment.
   c. Verify proper mating of new contacts by inspecting with .005 in. feeler gauge.
   d. Measure final contact spring pressure to insure consistency across all phases.
   e. Measure and record all contact resistances and insure consistency across all phases.
   f. Investigate and correct all abnormal conditions found.
   g. Operate the LTC from 16R to 16L using hand crank and electrically to insure proper operation and contact alignment.
8. Oil filling:
   a. Close and bolt door (lid), tightening all bolts evenly.
   b. Fill LTC per OEM instructions with new or reconditioned oil to proper level on oil level gauge.
   c. Reinstall breathers, if present, or top off with dry nitrogen if a sealed LTC.
   d. Operate LTC electrically from 16R to 16L several times to insure proper operation and dislodge any air bubbles.
   e. Pull oil sample for analysis for new benchmark.
   f. Perform TTR on all positions of the LTC.
   g. Check and replace LTC oil filter cartridge, if present.

www.EngineeringEbooksPdf.com

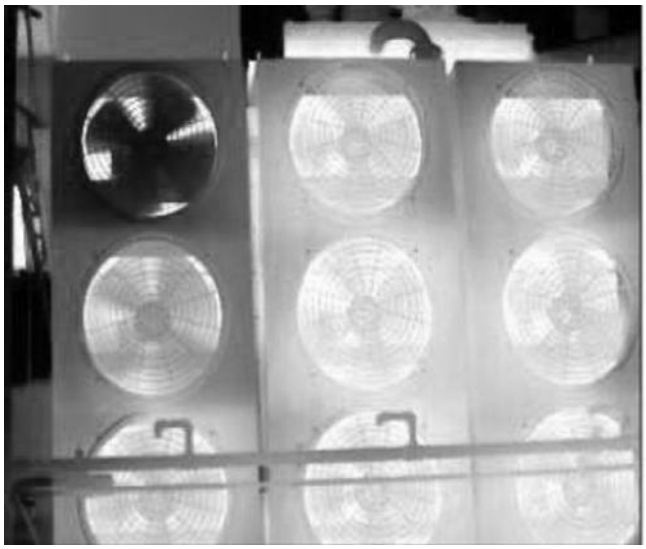

FIGURE 22.20 Infrared image of transformer cooler with nonfunctional fan. (Courtesy of Waukesha Electric Systems, Waukesha, WI.)

For reactive and resistive switching LTC, it is strongly recommended that on-line oil filtration be used to reduce the amount of carbon by-products present from the switching operations. The filtration helps improve oil quality and reduces contact wear and often provides up to 50% more contact life as compared to similar LTCs operated without filtration.

22.7.2.3 Cooling Systems

Cooling systems are critical to the performance and life expectancy of the transformer. According to the Arrhenius equation used in the transformer loading guide, for every 6°C–8°C that the hot-spot temperature increases beyond the IEEE design limit of 80°C, the insulation life decreases by a factor of 2. Therefore, it is critical to assure that your cooling system is working optimally (Figure 22.20).

During mechanical maintenance, the following activities should be undertaken:

- All cooling fans should be inspected for operation, potential fatigue of fan blades, and obstruction of the fan guards.
- If nonsealed bearings are utilized, fan motors should be lubricated per OEM instructions.
- All dirt, debris, birds' nests, pollen, and trash should be removed from the cooling surfaces.
- When cleaning radiators and coolers, a low-pressure stream of water should be directed from the inside of the radiators to the cooling fans in a direction opposite to the normal air flow. It is recommended that fan motors be electrically disconnected during cleaning operations to prevent potential damage to motor.
- Pumps should be checked for vibration, differences in running currents, loss of flow or flutter in flow gauge. Transformer oil pumps are often cooled with the transformer oil, so failed motors can sometimes create a combustible gas signature that can be detected in DGA for the transformer. Bearing failures can produce metallic fragments from bearing or impeller wear that can be directly pumped into the transformer, causing contamination of the windings.
- All isolation valves should be verified to be in the open position.

Note that often cooling equipment is painted to prevent corrosion, and while painting can retard surface corrosion, excessive paint film thickness can act as a barrier to heat transfer and actually reduce the effective thermal performance of the radiator or cooler. Additionally, operators sometimes will use a

www.EngineeringEbooksPdf.com

water overspray to improve cooling efficiency. While this typically improves performance in the short term, prolonged water overspray typically will leave mineral deposits which impede the thermal heat transfer and decrease cooling efficiency.

Another consideration with transformer cooling is the close proximity of restrictions, such as firewalls, that might impede airflow and cause the hot air being removed from the cooling surfaces to be recirculated, raising the immediate ambient temperature and reducing cooling effectiveness. In some cases, the application of louvers can help redirect air flow when elimination of the restriction is not possible.

22.7.2.4 Oil Preservation Systems

Typically, there is one of the three different types of oil preservation systems utilized on a power transformer.

1. Sealed systems—A nitrogen blanket is established in a headspace above the oil. The system is regulated through a pressure–vacuum bleeder. This system is typically used on smaller transformers and lower primary voltages.
2. Inertaire systems—A nitrogen blank is established in a headspace above the oil, and the headspace is actively maintained by a regulated nitrogen system.
3. Conservator system—An expansion tank is employed with a nitrile bladder utilized to separate the oil from atmosphere.

For the sealed system, the pressure gauge should be checked for proper pressure reading, and the pressure vacuum bleeder should be checked for any blockage in the vent screens. Depending upon manufacturer, the system is designed to operate between 5–6 in. vacuum and 5–6 lb positive gauge pressure as the transformer loading and ambient conditions change. If the pressure is typically at zero, a leak is likely in the system and should be investigated. The system is initially charged with nitrogen; however, with thermal expansion and contraction, this nitrogen blanket can be purged and replaced with atmospheric air which can increase the moisture content and oxygen content, and the oil might require more frequent reconditioning.

Inertaire systems should also be checked for bottle pressure. Most systems will alarm when the bottle pressure reaches 250 PSI. These systems are to maintain a positive pressure of nitrogen over the oil in transformer. The gas space is typically regulated between 0.5 and 5 PSI. In addition to checking the bottle pressure, the oil sump should be checked and drained of any accumulated oil, and the pressure–vacuum bleeder should be checked for any blockage in the vent screens.

Conservator systems employ an expansion tank that has a nitrile bladder. During mechanical inspections, the breather element should be removed and inspected for any blockages. A dowel rod with clean cloth contained on end of the rod should be lowered through the breather opening until it rests on bladders and then gently swabbed along bladders. When removed, there should be no oil residue on dowel rod. If oil is present, there is likely a rupture of the bladder which will require replacement. If the breather is equipped with desiccant, any spent desiccant that is pink or white needs to be replaced or regenerated in an oven.

22.7.2.5 Gauges and Protective Devices

It is recommended during the biannual testing that all thermal and protective devices be checked for proper calibration in accordance with the OEM manuals.

Analog winding temperature and liquid temperature gauges are often calibrated against a thermocouple calibrator and typically should be within ±3% of the full-scale reading of the gauge.

Sudden pressure and fault pressure relays should be calibrated against the designed operating pressures and response times to verify proper operation.

Gas detector or Buchholz relays should be tested with required gas injection to verify proper operation.

Any on-line monitoring devices should be calibrated in accordance with OEM instructions.

www.EngineeringEbooksPdf.com

22.7.2.6 Breathers

Any desiccant breathers for the conservator systems or LTC tanks should be inspected, and any desiccant that is pink or white should be replaced or regenerated. Failure to properly maintain breather can lead to higher moisture content.

The breather opening should also be inspected for any restrictions that would prevent the exchange of air, and the breather tubing should also be inspected for restriction.

Often the breather will have an oil cup at bottom of breather to help trap moisture and give a visual indication of air exchange. This oil reservoir should be replaced as necessary.

22.7.2.7 Leaks

Any oil leaks observed during mechanical maintenance should be corrected as these are the primary source for moisture and oxygen exchange with the insulation system. Leaks often originate from one of three sources as follows:

1. Threaded pipe fittings
2. Gasketing including valve packing glands
3. Welds

22.7.2.7.1 Threaded Fitting Leaks

Threaded fitting leaks typically result from looseness of connection, lack of thread sealant, or a mechanical distortion of the pipe or pipe coupling. It is recommended that Teflon sealing tape or Teflon sealing paste be used on all joints. When there is mechanical distortion of pipes or couplings, these components have to be replaced.

22.7.2.7.2 Gasket Leaks

Gasketing issues can result from lack of proper compression, deterioration of gasket, improper material, or mechanical damage such as pinching, overcompression, or failed scarfing joint.

There are four typical materials used for transformer gasket material:

1. Nitrile (Buna-N)—This material has a temperature limit of 100°C. It is recommended that the hardness, as measured by the durometer value, should be 70 or greater.
2. Cork neoprene—This material is commonly used for air joints and temporary shipping covers only. It is the best material for oil sealing when a gasket groove or gasket stop is not present. Recommended compression for this material is 43%.
3. Viton—This material has a temperature limit above 300°C and is often used in high-temperature areas such mounting gaskets for high-current low-voltage bushings and seals within ISO phase bus duct enclosures. Hardness of material as measured by the durometer value should be 70 or greater.
4. Fluor silicone—This material has a temperature limit below 50°C and is often used where very low ambient temperatures are expected. This gasket material should also have durometer value of 70 or greater.

All nitrile, Viton, or fluor silicone gaskets must be used within a gasket groove in conjunction with a gasket stop to prevent overcompression. The gaskets should be sized to provide 33%–40% compression, and the cross-sectional area of the gasket should not exceed the cross-sectional area of the gasket groove.

22.7.2.7.3 Weld Leaks

The transformer tank and fittings are fabricated from 3/16 to 1/2 in. low carbon steel. However, certain locations on the transformer may utilize nonmagnetic steel, so it is important to identify the material prior to beginning weld repairs. One should verify oil level is a minimum of 4 in. above the repair area. If the repair location is above the liquid level or the transformer has been drained, pressurize the transformer with dry nitrogen to prevent a potential fire hazard.

www.EngineeringEbooksPdf.com

To fix a weld leak, it is suggested to follow the following steps:

- Peen the weld leak closed.
- Clean, grind, or scrape the paint from the repair area.
- Using a 1/8 in. all-purpose rod (type 6013, type 7018, or type 308 stainless steel electrode for non-magnetic steel), apply a single pass in the direction to best prevent liquid seepage from interfering with the weld.
- Apply successive passes as necessary to seal the tank.
- Pressure test repair.
- Primer and paint affected area.
- Alternatively, a patch can be welded over the affected area.

22.7.3 Oil Quality Assessment [6]

On an annual basis, an oil quality assessment should be conducted. This assessment should include the dielectric, chemical, and physical properties of the oil. In accordance with *IEEE C57.106-2006 Guide for Acceptance and Maintenance of Insulating Oil in Equipment* [4] *and IEEE 637-1985 Guide for Reclamation of Insulating Oil and Criteria for its Use* [3], the following are suggested action limits for mineral oil (Table 22.8):

- Group 1 is oil that is in suitable condition for continued use in service-aged equipment.
- Group 2 is oil that should be reconditioned. Reconditioning involves vacuum dehydration to remove moisture and mechanical filtration to remove particulate from oil.
- Group 3 is oil that should be reclaimed. Reclamation involves the use of fuller's earth filtration to remove polar and soluble contaminants from the oil in addition to vacuum dehydration. Often reclamation will also necessitate the addition of oxidation inhibitors to replace natural inhibitors removed by the fuller earth.
- Group 4 is oil that should be scrapped and is no longer economically justified for reclamation.

In addition to the previous tests, particle count and metal-in-oil testing can help identify issues when pump failure or other contamination events are suspected.

Furfural analysis can also help detect aging rates and cellulose decomposition. It should be noted that any oil replacement or oil filtration will remove furanic compounds and could give an inaccurate estimate of the cellulose aging.

TABLE 22.8 Classification of Service-Aged Mineral Oil in Transformers

Test	Standard	Unit	Voltage (kV)	Group 1	Group 2	Group 3	Group 4
Dielectric breakdown	ASTM-D1816 W/1 mm gap	Min., kV	<69	23	<23	—	—
			69–288	28	<28	—	—
			≥345	30	<30	—	—
Neutralization number	ASTM-D974	Max., mg KOH/g	<69	0.2	—	>0.2	>0.5
			69–288	0.15	—	>0.15	>0.5
			≥345	0.1	—	>0.10	>0.5
Interfacial tension	ASTM-D971	Min., dynes/cm	<69	25	—	<25	<18
			69–288	30	—	<30	<18
			≥345	32	—	<32	<18
Moisture content	ASTM-D1533	Max., ppm @ 60°C avg. oil temp.	<69	35	>35	—	—
			69–288	20	>20	—	—
			≥345	12	>12	—	—
Power factor	ASTM-D921	Max., %	<69	0.5	—	>0.5	>1.0
			69–288	0.5	—	>0.5	>1.0
			≥345	0.5	—	>0.5	>1.0

www.EngineeringEbooksPdf.com

22.7.4 Dissolved Gas Analysis

Dissolved gas detection in the oil is an excellent diagnostic and preventative maintenance tool for power transformers. Transportation, installation, and intrusive maintenance can damage or compromise the transformer's electrical insulation system. Operating transformers are subject to thermal, mechanical, and electrical stresses that can cause deterioration and break down of solid and liquid insulation. The degradation of the electrical insulation system generates gases dissolved in the oil that are characteristic of the material and temperatures involved.

The analysis of types of gas, their concentrations, and the rates of generation can be used to determine the condition of the transformer and requirements for maintenance, reconditioning, or replacement. Analysis can help detect incipient fault conditions, severity of fault conditions, and potential location of the fault conditions. The gases of interest in DGA are the following:

- Hydrogen (H_2)
- Methane (CH_4)
- Ethylene (C_2H_4)
- Ethane (C_2H_6)
- Acetylene (C_2H_2)
- Carbon monoxide (CO)
- Oxygen (O_2)
- Nitrogen (N_2)
- Carbon dioxide (CO_2)

The total dissolved combustible gas (TDCG) content is the summation of hydrogen, ethane, ethylene, ethane, acetylene, and carbon monoxide.

Gas samples can be collected from the gas blanket over the oil or extracted from the oil. When testing from the gas blanket, the gas concentration and ratios are different in the gas space than in the oil due to the Oswald coefficients and their relative solubility in the oil. Therefore, gas space concentrations must be converted to oil concentrations before diagnostic techniques can be applied. Furthermore, gases generated in the oil take time to partition into the gas space and achieve equilibrium which can delay detection of a problem.

22.7.4.1 Sample Collection

To get an accurate assessment, it is critical to take a valid sample of the equipment. Suggested steps on sample extraction include the following:

- Verify positive oil head pressure at sample location to prevent entrance of external atmosphere.
- Flush sample location, sampling lines, and collection syringe to get representative sample with 3–5 qt of oil.
- Use new sampling lines for each compartment or piece of equipment.
- Verify the use of clean, dry, and sealed sampling devices.
- Remove all air from sample vessel.
- Typically 30 mL samples are required for analysis.
- Do not utilize plated or galvanized fittings that can produce gases as the result of chemical reaction.
- Record serial number, sample location, sample temperature, and equipment identification.

22.7.4.2 Analysis Techniques

There are many available diagnostic techniques to assess transformer DGA including Roger's ratio codes, IEC ratio code, Doernenburg ratios, and the Duval triangle. This discussion will focus on the key gas indicators, and the limits established in the *IEEE C57.104, Guide for Interpretation of Gases Generated in Oil Immersed Transformers* [5].

www.EngineeringEbooksPdf.com

TABLE 22.9 Key Gas Fault Conditions

Fault Pattern	Key Gas
Conductor overheating	Carbon oxides (CO/CO_2)
Oil overheating	Ethylene (C_2H_4)
Partial discharge	Hydrogen (H_2)
Arcing	Acetylene (C_2H_2)

TABLE 22.10 DGA Condition Limits

	Dissolved Key Gas Concentration Limits (ppm)							
Condition	H_2	CH_4	C_2H_2	C_2H_4	C_2H_6	CO	CO_2	TDCG
1	100	120	1	50	65	350	2,500	720
2	101–700	121–400	2–9	51–100	66–100	351–570	2,501–4,000	721–1,920
3	701–1,800	401–1,000	10–35	101–200	101–150	571–1,400	4,001–10,000	1,921–4,630
4	>1,800	>1,000	>35	>200	>150	>1,400	>10,000	>4,630

In the key gas method, the most prominent gas provides a leading indicator to the type of fault condition. The known fault conditions that are attributed to each of these key gases are summarized in Table 22.9.

According to *IEEE C57.104.2008 Guide for Interpretation of Gases Generated in Oil Immersed Transformers* [5], four condition classifications have been developed to help owners determine the criticality of their transformer operation condition. The dissolved key gas concentrations are shown in Table 22.10.

1. Condition 1—TDCG content below this level indicates satisfactory operation. Any individual combustible gas exceeding specified levels should prompt additional investigation.
2. Condition 2—TDCG content within this range indicates greater than normal combustible gas level. Any individual combustible gas exceeding specified levels should prompt additional investigation. Action should be taken to establish a trend. Fault(s) may be present.
3. Condition 3—TDCG content within this range indicates a high level of decomposition. Any individual combustible gas exceeding specified levels should prompt additional investigation. Immediate action should be taken to establish a trend. Fault(s) are probably present.
4. Condition 4—TDCG content within this range indicates excessive decomposition. Continued operation could result in failure of the transformer.

The rate of generation is also critical to the evaluation of the transformer condition. Faults that are evolving at a high rate of generation require additional attention and more rapid remediation that faults that are evolving at a slower rate. The suggested time intervals for sampling intervals are found in the IEEE C57.104 and are noted in Table 22.11.

The effectiveness of DGA and of the interpretation of these analyses can be limited by a number of factors which should be reviewed when analyzing data.

- Sampling technique—Cross contamination or chemical reactions with sampling materials can cause suspicious test results.
- Testing—Calibration differences between test labs can give an indication of acceleration or decline in gas levels or generation rates. It is recommended to be consistent in the use of a quality lab for trending purposes.
- Transformer's size and oil volume can distort the significance of gas concentration and generation rates—Faults of the same energy level will produce less gas in a larger transformer than in a smaller transformer as gas concentrations are normalized and reported as ppm (parts per million).

www.EngineeringEbooksPdf.com

TABLE 22.11 Suggested DGA Sampling Intervals

Condition	TDCG (ppm)	TDCG Rate (ppm/day)	Sampling Interval	Operating Procedure
4	>4630	>30	Daily	Consider removal from service. Advise manufacturer
		10–30	Daily	
		<10	Weekly	Exercise extreme caution. Analyze for individual gases. Plan outage. Advise manufacturer
3	1921–4630	>30	Weekly	Exercise extreme caution. Analyze for individual gases. Plan outage. Advise manufacturer
		10–30	Weekly	
		<10	Monthly	
2	721–1920	>30	Monthly	Exercise caution. Analyze for individual gases. Determine load dependence
		10–30	Monthly	
		<10	Quarterly	
1	≤720	>30	Monthly	Exercise caution. Analyze for individual gases. Determine load dependence
		10–30	Quarterly	Continue normal operation

- Multiple sources and causes—Often faults may involve multiple conditions such as overheating of a cellulose wrapped conductor can produce hydrocarbon gases in addition to the carbon monoxides.
- Stratification of the oil in the transformer can delay response to an incipient fault—Gas in the transformer has a tendency to rise toward the transformer cover and/or partition to the gas space. Sampling from a bottom drain valve immediately after a transformer has tripped off-line might not detect all gases evolved.
- Lack of trend data—Never base an operating decision off of one data point. Gas generation rates are important to know if there is an active fault condition.
- Residual gas from past events—If a problem that gives rise to gas generation is corrected, it is important to take a base line sample before returning transformer to service or to have the transformer degasified. If there is no base line data, subsequent tests with elevated gas levels may result in an assumption that the fault condition still exists.
- Insufficient gas concentration to use ratio analysis—When employing any of the ratio codes, it is assumed that the gas levels exceed IEEE Condition 1 level. The use of ratio codes when gas levels are below, this threshold could provide false diagnostics.

22.7.5 Transformer Dry Out Methods

When one or more of the transformer tests such as dew point, power factor, moisture equilibrium curves, or transformer oil moisture content suggest that the transformer insulation has a high level of moisture content, which is generally considered to be in excess of 2% by weight, it may become necessary to employ field drying processes.

The most commonly utilized methods involve taking the transformer out of service and draining of the oil to allow for proper drying. On-line methods are available; however, there are some inherent safety risks in these methods, and the drying process is very slow as the oil inhibits the removal of water from the cellulose insulation system which holds 99% of the available water.

22.7.5.1 Method 1: High Vacuum without a Heat Source

This method is generally effective for removing surface moisture resulting from exposure during the transformer assembly or repair methods. If transformer is partially filled, all oil should be drained from the transformer before beginning this process.

www.EngineeringEbooksPdf.com

Utilizing the vacuum pump, pull vacuum to a level of 2 Torr of less. It is advisable to utilize a cold trap in line between the transformer and vacuum pump to help collect the condensate as well as provide for greater pumping efficiency of the vacuum pump. If utilizing a cold trap, moisture extraction rates can be monitored periodically to determine when drying has stabilized and reached a predetermined rate of extraction.

Vapor pressure equilibrium charts can also provide guidance to help assess the moisture content of the insulation. It should be noted that charts are dependent on accurate temperature determination, as well as the system being in equilibrium. Since equilibrium conditions do not exist under vacuum and the insulation temperature is often difficult to accurately determine, moisture equilibrium charts do have limitations.

22.7.5.2 Method 2: High Vacuum with a Heat Source

This method is generally effective for removing larger concentrations of surface moisture or when ambient conditions are approaching freezing. All oil should be drained from the transformer before beginning this process, and it is advisable to close the top isolation valves of any cooling equipment while leaving bottom valves open to help prevent any condensation from collecting in cooling equipment.

Transformer oil is the most common method of introducing a heat source. The efficiency of the heating can be improved with the insertion of spray bosses to emulsify and more evenly distribute the oil throughout the transformer. These spray nozzles can be adapted to connect to manhole covers or other access plates on transformer covers. The positioning of the spray nozzles should be done to create the most uniform flow as well as be directed away from any porcelain and/or other insulating barriers that could be damaged by direct oil flow or create a risk of thermal shock (Figure 22.21).

Utilizing the vacuum pump, pull vacuum to a level of 2 Torr or less. Again, a cold trap in line between the transformer and vacuum pump will help collect the condensate as well as provide for greater pumping efficiency of the vacuum pump.

While maintaining vacuum level on tank, introduce suitable transformer oil processed through vacuum purification system into the spray system or through upper filter press valve on transformer. The inlet temperature of the oil should reach 70°C ± 5°C. Continue to admit oil into the transformer until there is an adequate quantity to establish a closed loop circulation with vacuum processing system. Drying of insulation submersed in oil is greatly diminished; therefore, only admit enough oil to establish oil circulation. Generally, this can be accomplished with less than 10% of the total oil volume.

FIGURE 22.21 Oil spray nozzles. (Courtesy of Waukesha Electric Systems, Waukesha, WI.)

www.EngineeringEbooksPdf.com

After admitting oil, connect inlet of vacuum purification system to transformer drain valve and begin a closed loop circulation process drawing oil from drain valve and pumping into spray system or upper filter press valve of transformer. Continue this process until the oil outlet temperature from transformer tank reaches approximately 50°C.

It is often helpful to utilize thermal blankets or insulation material to tarp unit to help retain heat. Auxiliary oil heaters are often used in conjunction with vacuum processing system to aid in the introduction of heat.

During the hot oil circulation process, monitor moisture extraction rate periodically (every 4–6 h) to determine when drying has ceased. Once the moisture extraction rate has decreased to predetermined limit (typically 0.5–1 oz/h), drain the oil from transformer tank into a storage tank.

Continue to pull vacuum after removal of oil. The moisture extraction will increase due to the increased drying effectiveness of the insulation that was below the oil level during the circulation process.

Once cold trap readings have stabilized and reached a predetermined limit, the operator can break vacuum with dry gas and perform a dew point measurement to confirm that the moisture content meets OEM specifications. Alternatively, vapor pressure equilibrium charts can provide guidance on the moisture content of the insulation.

Following a dry out operation that involves introduction of heat, it should be noted that the insulation temperature generally remains elevated above ambient temperature for an extended period. Therefore, direct methods of measurement are preferred to accurately use dew point or moisture equilibrium charts.

Beyond the two methods described earlier, there are other methods for performing dry out of the transformer insulation, although less common and often impractical for large power transformers. These methods can include short circuiting of windings and pulling vacuum, introduction of a hot air duct system, and completely filling the transformer and circulating hot oil.

22.7.6 Oil Reconditioning and Reclamation

When the general chemistry oil parameters exceed the permissible limits as established in Section 22.7.3, it become necessary to recondition or reclaim the oil.

To correct high moisture content and low dielectric strength, it becomes necessary to recondition the oil by processing the oil through a vacuum dehydration unit. Preferably, the transformer should be drained into a suitable storage tank. After draining transformer, the oil can be recirculated in the storage tank for three to five times the volume of oil to dehydrate and remove particulates suspended in the oil. The oil should be retested after processing in the storage tank, and it should meet the limits for Group 1 oil established in Table 22.8. The transformer should then be refilled in accordance with the original manufacturer's filling procedure. It should be noted that if moisture content of oil is elevated, it is quite possible that insulation moisture content is also elevated, and the transformer cellulose insulation system may require dry out. The insulation moisture content can be verified through the use of a dew point measurement.

To correct issues with oil interfacial tension, power factor, acid/neutralization number or color, it will be necessary to process oil through fuller's earth media to extract the soluble and polar contamination. Vacuum dehydration alone will not correct chemical issues with the oil. The transformer should be de-energized and removed from service. Heated transformer oil with a minimum temperature of 70°C should be removed from transformer and passed through fuller's earth treatment tower. Upon exiting the fuller's earth tower, oil should be passed through a vacuum dehydration system to remove water absorbed from the clay before being reintroduced into transformer. This circulation process should occur multiple times, and the oil quality tested after each circulation process to determine if limits of Group 1 oil established in Table 22.8 have been achieved.

The fuller's earth media will diminish in effectiveness as contaminates are absorbed by the media in the reclamation process, and it may be necessary to exchange the fuller's earth media during the process. The chart shown in Figure 22.22 provides some estimate regarding the amount of fuller's earth media required to treat oil based upon its acid/neutralization content.

www.EngineeringEbooksPdf.com

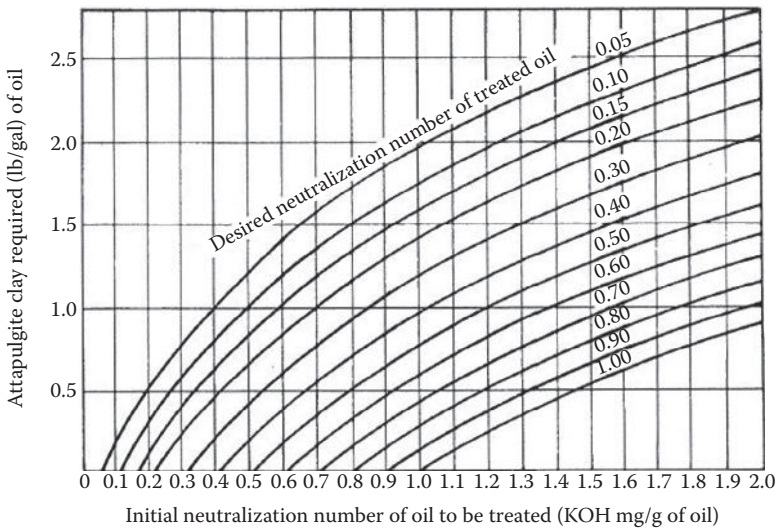

FIGURE 22.22 Fuller's earth treatment requirements.

After completing the process, the oil oxidation inhibitor content should be checked. If the oxidation inhibitor content is less than 0.3%, it is suggested that oxidation inhibitor be added to the oil.

To degasify transformer oil, it is necessary to utilize the vacuum dehydration equipment. The most effective procedure to degasify oil is to remove the oil from the transformer, and then vacuum-fill transformer per original manufacturer's procedures. It is possible to recirculate oil from bottom drain valve through vacuum dehydration unit and back into transformer; however, this method does not provide for full exposure of the cellulose insulation to vacuum, and considerable amounts of gas will be retained in the insulation, and this gas will leach from the insulation structures slightly elevating gas levels after processing has completed.

References

1. IEEE C57.93-2007, *IEEE Guide for Installation of Liquid-Immersed Power Transformers*, 2007.
2. IEEE C57.106-2006, *IEEE Guide for Acceptance and Maintenance of Insulating Oil in Equipment*, 2006.
3. IEEE C57.139-2010, *Guide for Dissolved Gas Analysis in Load Tap Changers*, 2010.
4. IEEE C67.106-2006, *Guide for Acceptance and Maintenance of Insulating Oil in Equipment*, 2006.
5. IEEE C57.104-2008, *IEEE Guide for the Interpretation of Gases Generated in Oil Immersed Transformers*, 2008.
6. IEEE 637-1985, *IEEE Guide for the Reclamation of Insulating Oil and Criteria for Its Use*, 1985.
7. International Electric Test Association, *Maintenance testing specification*, 2010.
8. Transformer Oil Processing, Troy Kabrich, Doble Life of Transformer Seminar, February 2005.
9. Transformer Field Installation, Receiving, impact recorders, field assembly, oil processing, and acceptance testing transformer oil processing, Troy Kabrich, Doble Life of Transformer Seminar, February 2010.

www.EngineeringEbooksPdf.com

23

Problem and Failure Investigation

23.1 Introduction **23**-1
23.2 Background Investigation **23**-2
Transformer Records • Transformer Protection • Recording Devices • Operational History
23.3 Problem Analysis Where No Failure Is Involved **23**-6
Transformer Components • Severe Duty Investigations
23.4 Failure Investigations **23**-9
Dismantling Process
23.5 Analysis of Information **23**-10
Interpretation and Analysis of Information • Analysis of Current and Voltage Waveforms • Analysis of Short-Circuit Paths • Analysis of Mechanical Stresses
23.6 Report of Failure Investigations **23**-16
23.7 Special Considerations **23**-16
Personal Injury • Safety
References **23**-17

Wallace B. Binder
WBBinder Consultant

Harold Moore
H. Moore and Associates

23.1 Introduction

The investigation of transformer problems or failures is in many respects similar to medical procedures. The health of a transformer can be monitored using the many diagnostic tools available today. And like human health, ignoring a minor problem can lead to a more severe failure. Documenting and recording the results of operation and diagnostic testing is essential to a complete evaluation. Early detection and mitigation of developing problems can, in the long term, save the cost of major repairs. Many transformer operators with significant numbers of transformers perform field diagnostics and share this information with other operators to establish benchmark performance for transformers in different applications and with different designs.

However, like medical diagnostics, the results of external tests can be misread or misinterpreted or mask other phenomenon. None of the tests can guarantee that a failure will not occur, or has not occurred. Furthermore, failure analysis is not simply collecting and analyzing test results. It involves application of the scientific method to take into account all likely failure scenarios.

Scientific method has been taught in elementary school and should be well understood. Failure analysis must be objective and take into account *all* facts and measured data:

- Establish a conjecture of the cause (or hypothesis).
- Collect and analyze data.
- If any data disproves the hypothesis, reevaluate and develop a new hypothesis.

www.EngineeringEbooksPdf.com

- Iterate to a final conclusion and share the conclusion with stakeholders.
- If additional data or hypotheses are made known by any stakeholder, evaluate the new data and repeat the process.

Test techniques continue to evolve and improve, making more noninvasive testing and analysis possible. The choice of applying a test technique must be weighed against the cost of the instrumentation, collecting the data, storing the data, and analyzing the data over the decades-long life of a transformer. Ultimately, it is an economic decision on how much data collection and analysis will be beneficial to warrant the expense. Some transformers may be regarded as expendable commodities, while others are regarded as critical assets worth protecting and worth a considerable amount of on-going expense to keep safe and secure. In the current regulatory environment of NERC Critical Infrastructure Protection (CIP) or in the case of nuclear plant assets, the collection and evaluation of data becomes a very time-consuming process. Once the commitment is made, the resources must be devoted to the task of collecting, categorizing, and analyzing data, or one faces the scrutiny of regulators, notably the NERC and FERC under whose jurisdiction these new and evolving rules and regulations fall, or the NRC for nuclear assets.

Elements of transformer design, application, and operation are involved in failure investigation. The elements to be investigated depend on the nature and the severity of the problem. If a failure is involved, all of the elements are usually investigated. The analysis required can be quite complex and involved. It would be impossible to describe the many details involved in complex failure investigations within this one section; indeed, a complete book could be written on this subject. In the space allotted here, it will only be possible to describe the processes involved in such investigations.

Excellent references are ANSI/IEEE C57.117 *Guide for Reporting Failure Data for Power Transformers and Shunt Reactors on Electrical Power Systems* [1] and ANSI/IEEE C57.125 *Guide for Failure Investigation, Documentation, and Analysis for Power Transformers and Shunt Reactors* [2]. These consensus guides offer formats for data collection and failure reporting (C57.117) and structure for failure analysis (C57.125). However, there is no substitute for experience. These processes go hand-in-hand, so in the future, it is anticipated that these guides will be combined into a single document.

The following steps are involved in problem and failure investigations:

- Collect pertinent background data.
- Visit the site to obtain application and operational data.
- Interview all persons that may have relevant knowledge.
- Inspect the transformer and perform a partial or complete dismantling if a failure is involved.
- Analyze the available information and transformer history.
- Prepare a preliminary report and review with persons who are involved or who have a direct interest to generate additional inputs.
- Write a final report.

As a general statement, no details should be neglected in such investigations. Experience has indicated that what may appear to be minor details sometimes hold the essential clues for solutions. Collection of *all* relevant data is the most important aspect of problem and failure investigation.

23.2 Background Investigation

The background investigation usually involves exploring the following:

- Identification of failure. How did the transformer problem manifest itself, or how did the failure occur? This starting point assumes that some event has occurred, such as a trip, malfunction, or abnormal diagnostic test results. This may necessitate a site visit to collect protective relay information, collect diagnostic test results, and collect related information on what occurred at the time of failure.

www.EngineeringEbooksPdf.com

- The original transformer design.
- A history of similar transformer designs.
- The original manufacturing and testing of the transformer.
- System application and operational data.

23.2.1 Transformer Records

23.2.1.1 Transformer Application

Cooperation between parties involved will speed the investigation and lead more easily to a correct conclusion. The manufacturer should be contacted even when the transformer is very old. Most equipment manufacturers track problems with their designs, and awareness of problems can help them improve designs and manufacturing processes. The manufacturer may also be able to provide information leading to a solution.

Application of the transformer in the power system should be determined. A party with expertise in transformer application should confirm that the transformer was properly rated for the purpose for which it was intended and that subsequent operation has been consistent with that intent.

Transformer problems can lead to service outages. Careful analysis of the situation before restoring service can avoid a repetition of the outage and avoid increasing damage to the transformer.

The performance of transformers made by the manufacturer should be studied. Industry records of transformers of similar rating and voltage class may be helpful in establishing base data for the investigation. For example, there have been transformers made by certain manufacturers that have a history of short-circuit failures in service. At one time, the failure record of extra-high-voltage (EHV) transformers designed with three steps of reduced basic impulse insulation level (BIL) had a higher failure rate than those with higher BILs.

23.2.1.2 Transformer Design

The specifications for the transformer, instruction books and literature, nameplate, and drawings such as the outline and internal assembly should be examined. If failures involving the core and windings have occurred, the investigative process is much like a design review in which the details of the insulation design, winding configuration, lead configurations and clearances, short-circuit capability, and the core construction and normal operating induction must be studied. If components are involved, bushings and bushing clearances, tap changers, heat exchanger equipment, and control equipment should be investigated.

23.2.1.2.1 Design Review Process

An explanation of the design review process would require a separate chapter and is beyond the scope of this subject. The process involves a detailed study of the winding and insulation designs, short-circuit capability, thermal design, magnetic-circuit characteristics, leakage flux losses and heating analysis, materials used, oil preservation systems, etc. In some cases, it may be desirable to conduct part or all of a design review as a part of a problem investigation.

A minimum design review will confirm or reveal problems with the manufacturer's interpretation of the users' specification, or even identify issues with the intended use or application such as the following:

- Unusual operating conditions which may not have been accounted for in either the specification or the design, such as altitude, temperature, exposure to transients, or seismic conditions
- Rating requirements that are different from those specified or those designed relating to things such as loading conditions, isokeraunic levels, overvoltage exposure, or the magnitude of harmonic voltages and currents
- Impedance value of the transformer required to operate within the system

www.EngineeringEbooksPdf.com

It is also helpful, during the investigation of failures, to have reviewed the design issues including the following:

- Winding type and layout (e.g., shell form or core form, layer or disk, and wye or delta)
- Winding insulation (e.g., voltage stresses, conductor or turn insulation type, winding-to-winding and winding-to-ground insulation and lead insulation and clearances, and design margins)
- Impulse voltage distribution (e.g., initial distribution and shield rings)
- Short-circuit strength calculations
- Stray fields (e.g., flux heating and resulting losses or core loss components)

23.2.1.2.2 Determine If Similar Designs Experienced Problems or Failures

This can be difficult since there is no agency that collects and distributes data on all industry problems. It has been made even more difficult by the closing of several major transformer manufacturing plants. However, some information can usually be obtained by discussions with users having transformers made by the same manufacturer.

23.2.1.3 Manufacturing and Testing of Transformer

The manufacturing and test records should be studied to determine if discrepancies occurred. Of particular importance are deviations from normal manufacturing specifications or practices. Such deviations could be involved in the problem or failure. All parts of the test data must be studied to determine if discrepancies or deviations existed. Partial-discharge and impulse test data that have any deviation from good practices should be recorded. Approvals of deviations made during testing, especially relating to dielectric and other test standards, are sometimes indications of difficulty during testing.

23.2.1.4 Transformer Installation

The records of installation and initial field tests should be used as a benchmark for any future test results. These initial field tests are more easily compared with subsequent field tests than with factory tests. Factory tests are performed at full load current or full voltage, and adjustments must be made to field test results to account for differences in losses at reduced load and differences in excitation at the operating voltage.

23.2.2 Transformer Protection

The protection of the transformer is as important a part of the application as the rating values on the transformer. Entire texts, as well as Chapter 19, are devoted to the subject of transformer protection. When investigating a failure, one should collect all the protection-scheme application, collect all targets or alarm and trip indications, and confirm that the operation of any tripping function was correct. A current body of knowledge on the subject of transformer protection is the C37.91, *IEEE Guide for Protecting Power Transformers* [3].

23.2.2.1 Surge Arresters

Surge arrester protective level must be coordinated with the BIL of the transformer. Their purpose, to state what may seem obvious, is to protect the transformer from impulse voltages and high-frequency transients. Surge arresters do not eliminate voltage transients. They clip the voltages to a level that the transformer insulation system is designed to tolerate. However, repeated impulse voltages can have a harmful effect on the transformer insulation. The current body of knowledge on surge protection are C62.11, *IEEE Standard for Metal-Oxide Surge Arresters for AC Power Circuits (≥1 kV)* [4], and C62.22, *IEEE Guide for the Application of Metal-Oxide Surge Arresters for Alternating-Current Systems* [5].

23.2.2.2 Overcurrent Protection

Overcurrent devices must adequately protect the transformer from short circuits. Properly applied, the time-current characteristic of the device should coordinate with that of the transformer.

www.EngineeringEbooksPdf.com

These characteristics are described in IEEE C57.109, *Guide for Liquid-Immersed Transformer Through-Fault Duration* [6]. Overcurrent devices may be as simple as power fuses or more complex overcurrent relays. Modern overcurrent relays contain recording capability that may contain valuable information on the fault being investigated.

23.2.2.3 Differential Protection

Differential relays, if applied, should be coordinated with the short-circuit current available, the transformer turns ratio and winding connection, and the current transformers employed in the differential scheme. Check that the differential scheme is properly coordinated. If differential relays have operated correctly, a fault occurred within the protected zone. One must determine if the protected zone includes only the transformer, or if other devices, such as bus work or circuit breakers, might have faulted.

23.2.3 Recording Devices

The occurrence of unusual trends or events that indicated a possible problem should be recorded. Operation of relays or protective equipment that indicated a failure should be studied. In many modern installations, oscillographic or computer records of the events surrounding the problem or failure will be available.

Records of events immediately prior to the observation of a problem or immediately prior to a trip are often only the final events in a series that led to the failure. Investigations at the transformer location should concentrate on collecting such data as relay targets, event recordings, and on-line monitoring records as well as making observations of the condition of the transformer and associated equipment.

Records of relay operation must be analyzed to determine the sequence of events. A failure of a transformer due to a through fault, if uncorrected, can lead to the failure of a replacement unit. This can be a very expensive oversight.

Based on initial observations and recordings, a preliminary cause may be determined. Subsequent tests should focus on confirming or refuting this cause.

23.2.4 Operational History

23.2.4.1 Diagnostic Testing

The operation records of the transformer should be examined in detail. Records of field tests such as insulation resistance and power factor, gas-in-oil analysis, oil test data, and bushing tests should be studied. Any trends from normal such as increasing power factor, water in oil, or deterioration of oil properties should be noted. Any internal inspections that may have been performed, changes in oil, and any repairs or modifications are of interest. Maintenance records should be examined for evidence of either good or poor maintenance practices. Proper application of arresters and other protective schemes should be verified.

23.2.4.2 Severe Duty

Operational history such as switching events, numbers and type of system short circuits, known lightning strikes, overloads, etc., should be recorded.

23.2.4.2.1 Overloads

The effect of loading a transformer beyond nameplate is not apparent without disassembly. The history of transformer operation will be the first indication of damage from overloads. The transformer may have some inherent capability to handle loading in excess of nameplate rating. However, the result of loading beyond nameplate can result in accelerated loss of life. This loss of life is cumulative and irreversible. Loading recommendations are more fully described in C57.91, *IEEE Guide for Loading Mineral-Oil-Immersed Transformers* [7], and C57.96, *IEEE Guide for Loading Dry-Type Distribution and Power Transformers* [8].

www.EngineeringEbooksPdf.com

23.2.4.2.2 Overvoltages

Maximum continuous transformer operating voltage should not exceed the levels specified in ANSI C84.1, *American National Standard For Electric Power Systems and Equipment Voltage Ratings (60 Hz)* [9]. Overexcitation will result in core heating and subsequent damage. The results of core heating may not be readily discerned until a transformer is untanked. Examination of the operating records may provide insight into this as a cause of damage.

23.2.4.2.3 Short Circuits

IEEE C57.12.00, *IEEE Standard General Requirements for Liquid-Immersed Distribution, Power, and Regulating Transformers* [10], and IEEE C57.12.01, *IEEE Standard General Requirements for Dry-Type Distribution and Power Transformers Including Those with Solid-Cast and/or Resin-Encapsulated Windings* [11], state limits for short-circuit durations and magnitude. Not all short-circuits reach the magnitude of those limits. However, like overloads, the effect can be cumulative. This effect is further expanded in IEEE C57.109, *IEEE Guide for Liquid-Immersed Transformer Through-Fault-Current Duration* [6]. The effect is described as an "extremely inverse time-current characteristic" upon which the overcurrent protection of the transformer should be based.

23.3 Problem Analysis Where No Failure Is Involved

23.3.1 Transformer Components

Component failures can lead to major failures if left uncorrected. All of these should be corrected as soon as identified to avoid letting them develop into problems that are more serious.

23.3.1.1 Transformer Tank

Transformer tank welds can crack after thermal cycling or even after withstanding the stresses of through-faults. Bushing and radiator gaskets can deteriorate over time, leading to leaks. Left unattended, these leaks can result in moisture entering the transformer insulation.

23.3.1.2 Transformer Radiators and Coolers

Radiators can leak, leading to ingress of moisture, or they can clog, reducing their cooling efficiency. Fan motors can fail, resulting in a loss of cooling. Today's modern low-loss transformer designs can have a dual rating ONAN/ONAF with as few as one or two cooling fans. Loss of a large percentage of the fans necessitates using the ONAN rating for transformer capacity. (See the Section 2.2.3, for a discussion of cooling-class terminology.)

Radiator valves can be inadvertently closed, reducing the cooling capacity. This results in higher than normal temperatures and potential loss-of-life for normal loading. Any evidence or recorded history of such events should be included in the preliminary findings.

23.3.1.3 Transformer Bushings

Bushings occasionally develop problems such as leaks or high power factor and thermal problems. Problems detected during periodic diagnostic testing should be remedied as quickly as possible.

Problems of thermal instability, while rare, occur with bushings, resulting in separation of gaskets or rupture of the shed. Projectiles can shatter porcelain sheds or crack the shed. Problems such as cracks can be the result of handling and go undetected until they show up on an abnormal power-factor test. These types of problems can often lead to more serious damage if left unresolved.

23.3.1.4 Transformer Gauges

Gauges and indicating devices should be repaired or replaced as soon as it is suspected that they are giving false indication. Confirm that the abnormal indication is false and replace the device. Letting a false indication continue may disguise the development of a more severe problem.

www.EngineeringEbooksPdf.com

23.3.2 Severe Duty Investigations

It is advisable to make some investigations after severe operating events such as direct lightning strikes (if known), high-magnitude short-circuit faults, and inadvertent high-magnitude overloads. Problem investigations are sometimes more difficult than failure analysis because some of the internal parts cannot be seen without dismantling the transformer. The same data-collection process is recommended for problems as for failures. It is recommended that a plan be prepared when the investigation is initiated, including a checklist to guide the study and to ensure that no important steps are omitted. A recommended checklist is in ANSI/IEEE C57.125. Specific steps that are recommended are as follows:

23.3.2.1 Communication with Persons Involved or Site Visit

- Obtain the background of the events indicating a problem.
- If there is any external evidence such as loss of oil, overheated parts, or other external indications, a site visit may be advisable to get first-hand information and to discuss the events with persons who operated the transformer.
- Determine if there have been any unusual events such as short circuits, overvoltages, or overloads.

23.3.2.2 Diagnostic Testing

If the utility has a comprehensive field-testing program, obtain and study the following data. If the data are not available, arrange for tests to be made.

23.3.2.2.1 Gas-in-Oil Analysis

Obtain test results for several years prior to the event, if possible. Many good papers and texts have discussed the interpretation of dissolved gas-in-oil analysis (DGA) results. One must also remember that once an internal failure has occurred, the initiating cause may be masked by the resulting fault gases. IEEE C57.104, *Guide for Interpretation of Gases Generated in Oil-Immersed Transformers* [12], can provide the latest body of knowledge for interpretation of DGA results.

23.3.2.2.2 Oil Test Data

A comprehensive oil analysis program should be followed including, at minimum, periodically recording the following test results:

- Dielectric strength in accordance with *ASTM standard D1816* [13]
- Water in oil (*ASTM standard D1533* [14])
- Power factor at 25°C and 100°C, if available (*ASTM standard D924* [15])
- General characteristics such as color (*ASTM standard D1500* [16]), interfacial tension (IFT, *ASTM Standard D971* [17]), etc.

23.3.2.2.3 Turns Ratio

This test should match the factory results and be within the standard 0.5% of calculated value (except as noted in Clause 9.1 of IEEE C57.12.00). Any deviation indicates a partially shorted turn.

23.3.2.2.4 Resistance

Such measurements must be made using suitable high-accuracy instruments; these measurements are not easy to make under service conditions.

23.3.2.2.5 Insulation Power Factor, Resistance, and Capacitance

Measurement and recording of insulation power factor will show trends in insulation condition after accounting for instrumentation, operator, and temperature differences between tests. Winding power factor, bushing capacitance, and insulation resistance are all values that normally change over time, but values that change excessively require further investigation.

www.EngineeringEbooksPdf.com

A polarization index can be determined in the same manner. Polarization index results that are less than 2.0 indicate deterioration of the insulation.

23.3.2.2.6 Low-Voltage Exciting Current (If Previous Data Are Available)

This information is an excellent indication of winding movement, but the test must be performed under circumstances similar to the benchmark test to be of value.

23.3.2.2.7 Short-Circuit Impedance (If Faults Have Been Involved)

This test is an indicator of winding movement that may also give indication of shorted turns.

23.3.2.2.8 Sweep Frequency Response Analysis (If Previous Data Are Available)

This test is an indicator of winding movement that requires comparison to benchmark results on a new or unfaulted winding. Test results can be compared to original results, identical unit test results, or similar winding (within the same transformer) test results. The interpretation is less successful as one steps through the previous order of tests from first to last.

23.3.2.3 Internal Inspection

If the problem cannot be identified from the test data and behavior analyses, an internal inspection may be necessary. In general, internal inspections should be avoided because the probability of failure increases after persons have entered transformers. All diagnostic tests should be finished before conducting an internal inspection as there is a high likelihood that after entering the tank, conductors will be displaced, contamination will be introduced, or evidence will be destroyed (or compromised).

During the internal inspection, all appropriate safety precautions must be followed to assure the safety of individuals inside the tank. These precautions include the following:

- Observe caution when opening the tank-cover as there may be pressure on the tank.
- Drain the oil to a tank that is designated to hold the oil in its (possibly) contaminated condition.
- Remove combustible gases (either by vacuum or back-filling during oil removal with dry breathing air) and monitoring of lower explosive limit (LEL) before entering the tank and while working in the tank.
- Provide breathing air in sufficient quantity and of sufficient oxygen content to sustain life (usually 19.5%–23% oxygen) and at a prescribed minimum flow rate (usually 20 cfm + 5 cfm for each additional person in the tank).
- Observe confined space safety including the corporate, local, state, and federal mandated requirements for training, monitoring, permitting, etc.
- Observe caution while in the tank so as not to become trapped in a pocket of low oxygen content gas.
- Use explosion proof (low-voltage) lights.
- Tie off all tools or instruments with cotton tape to prevent dropping them into an inaccessible part of the winding.

The following items should be checked when the transformer is inspected:

- Is there evidence of carbon tracks indicating flashovers or severe partial discharges?
- Check leads for evidence of overheating. The insulation will be tan, brown, or black in extreme cases.
- Check for evidence of partial-discharge trees or failure paths. Do odors indicate burned insulation or oil?
- Check bolted connections for proper tightness.
- Are leads and bushing lower shields in position? Is the lead insulation tight?
- Inspect the windings for evidence of distortion or movement.
- Check the end insulation on core-form designs for evidence of movement or looseness.

www.EngineeringEbooksPdf.com

- Are the support members at the ends of the phases tight in shell-form designs?
- Are coil clamping devices tight and in position?
- Check tap changers for contact deterioration. Is there evidence of problems in the operating mechanisms?
- In core-form units, check visible parts of the core for evidence of heating.

After the inspection has been completed, look over everything again for evidence of "does anything look abnormal." Such final inspections frequently reveal something of value.

23.4 Failure Investigations

The same processes are required in failure investigations as for problem analyses. In fact, it is recommended that the approaches described for problem investigations be performed before dismantling of the transformer to determine possible causes for the failure. Performing this work in advance usually results in hypotheses for the failure and frequently indicates directions for the dismantling. Thus, the only additional steps (after the analysis of test data) to be performed following a failure are to dismantle the transformer and make a determination whether it should be repaired. There is never a 100% certainty that the cause of failure can be determined. All theories should be tested against the facts available, and when assumptions come into doubt, the information must be replaced with data that are confirmed by the other facts available.

As a general rule, all steps of the process should be documented with photographs. All too often, it happens that something that was not considered relevant in the early stages of the investigation is later determined to be important. A photographic record will ensure that evidence that has been destroyed (or compromised) in the dismantling process is available for later evaluation.

23.4.1 Dismantling Process

Complete dismantling is usually performed when a failure has occurred. In a few instances, such operations are performed to determine the cause for a problem, such as excessive gassing that could not be explained by other investigations.

The following steps are recommended for this process.

23.4.1.1 Transformer Expert

The process should be directed by a person or persons having knowledge of transformer design. If it is done in the original manufacturer's plant, the manufacturer's experts will usually be available. However, it is recommended that the user have experts available if the failure mechanism is in doubt. It is good to have two experts available because they may look into the failure from different perspectives and will provide the opportunity to discuss various aspects of the investigation from different viewpoints.

23.4.1.2 Inspection before Untanking

Inspect the tank for distortion resulting from high internal pressures that sometimes result from failures. Check the position of leads and connections. Determine if there has been movement of bushings.

23.4.1.3 Inspection after Removal of Core and Windings

- Make a detailed inspection of the top ends of windings and cores.
- Inspect the mechanical and electrical condition of the interphase insulation and the insulation between the windings and the tank.
- Check the core ground.
- Check lead entrances to windings for mechanical, thermal, and electrical condition.

www.EngineeringEbooksPdf.com

- Check the general condition of leads, connections, and tap changers.
- Check the leakage flux shields on tank walls or on frames for heating or arcing.
- Examine the wedging between phases and from the windings to the core on shell-form units and the winding clamping structures on core-form units to determine if there is still pressure on the windings.

23.4.1.4 Detailed Inspection of the Windings

- Is there evidence of electrical failure paths from the windings over the major insulation to ground?
- If there is evidence of electrical arcing, can the start and end of the arc be determined? (Caution: An arc can have multiple termini, so do not stop looking after finding one possible path.)
- Is there evidence of distortion of the coils or windings resulting from short-circuit failures?
- Has electrical failure occurred between turns, and has there been mechanical distortion of the turns?
- Have failures occurred between windings or between coils? Are there weaknesses in non-failed portions that could affect the electrical strength? Such instances include damage to turn insulation, distorted disks or coils, or insulation pieces not properly assembled.
- Is there evidence of metallic contamination on the insulation and windings?
- Is there evidence of hot spots at the ends of windings or in cap leads inside the disks or coils?
- Is there any evidence of partial discharges or overheating in the leads or connections?
- Were the windings properly supported for short circuit?
- Are spacers in alignment?
- Is insulation between windings and between the inner winding and the core tight?

23.4.1.5 Examination of the Magnetic Circuit

- Have electrical arcs occurred to the core? If so, determine if the fault current flowed from the failure point to ground, resulting in damage to core laminations in this path. Note that any such damage will usually require scrapping of the laminations.
- Is there evidence of leakage flux heating in the outer laminations?
- Has heating occurred as the result of large gaps at the joints, excessive burrs at slit, or cut edges and joints?
- Does mechanical distortion exist in any parts of the core?
- Is there evidence of heating in the lock plates used for mechanical support of the frames?
- Is the core ground in good condition, with no evidence of heating or burning?
- Is there any evidence of a second (unintended) core ground having developed?

23.4.1.6 Mechanical Components

- Is there distortion in the mechanical supports?
- Is there evidence of leakage flux heating in the frames or frame shields?

23.5 Analysis of Information

Information on interpretation of the data could take volumes, and there is much information on this subject in the technical literature. Some simple guides are listed in the following for reference:

- The presence of high carbon monoxide and carbon dioxide are indications of thermal or oxidative damage to cellulose insulation. If there is high CO and there have been no overloads or previous indications of thermal problems, the problem may be excessive oxygen in the oil.
- High oxygen is usually an indication of inadequate oil processing, gasket leaks, or leak of air through the rubber bag in expansion (conservator) tanks.
- Acetylene is an indication of arcing or very high temperatures.

www.EngineeringEbooksPdf.com

- Deterioration of oil dielectric strength usually results from particulate contamination or excessive water.
- High power factor or low resistance between windings or from the windings to ground is usually the result of excessive water in the insulation.
- High water in oil may result from excessive water in the paper. Over 95% of the total water in the system is in the paper, so that high water in oil is a reflection of the water in the paper.
- Turns ratio different from previous measurements is an indication of shorts in a winding. The shorts can be between turns or between parts of windings, such as disk-to-disk.
- A measurable change in the leakage impedance is an indication of winding movement or distortion.
- Changes from the baseline in the signature of a sweep frequency response analysis (SFRA) can indicate movement of windings or leads, but they can also detect changes to the magnetic circuit. (IEEE C57.149, *Guide for the Application and Interpretation of Frequency Response Analysis for Oil Immersed Transformers* [18], contains the latest body of knowledge on interpretation of FRA results.)
- Open circuits result from major burning in the windings or possibly a tap-changer malfunction.
- High hydrogen, with methane being about 20% of the hydrogen, is an indication of partial discharges. "Spitting" or "cracking" noises noted prior to the failure are sometimes indicators of intense partial discharges.

23.5.1 Interpretation and Analysis of Information

The most important part of the process is analysis of the information gathered. The objective is determining the cause of the problem or failure, and adequate analysis is obviously necessary if problems are to be solved and failures are to be prevented. There is no one process that is best for all situations. However, there are two helpful steps for reaching conclusions in such matters:

- Make a systematic analysis of the data.
- Compare data analyses to known problem and failure modes.
- Three basic failure modes exist—(1) insulation failure due to voltage stress, (2) insulation failure due to premature aging (thermal problems), and (3) winding mechanical failure due to high forces displacing the conductor. While it is not critical to place a given failure into one of the three modes, if evidence leads in the direction of one of the three, there is a tendency to ignore other evidence that does not contribute to the type of failure. Failures are complex and can be a combination of the three. As described in the following, the initiating cause may be a variety or a combination of issues.

23.5.1.1 Systematic Analysis of Data

- Prepare a list of known facts. List also the unknowns. Attempt to find answers for the unknowns that appear to be of importance.
- Analyze known facts to determine if a pattern indicates the nature of the problem.
- Prepare a spreadsheet of test data and observations, including inspections. Note items that appear to indicate the cause of the problem or failure.
- Use problem-solving techniques.

23.5.1.2 Comparison to Known Problem and Failure Modes

There are many recognized possible failure modes; a few are listed here as examples and for guidance. While it is not an exhaustive list of failure modes, it is a starting point from which to do additional literature research for diagnosis.

www.EngineeringEbooksPdf.com

23.5.1.2.1 Dielectric or Insulation Failures

- Surface or creepage over long distances. If the design is shown to be adequate, this phenomenon is usually caused by contamination. If the design is marginal, slight amounts of contamination may initiate the discharges or failure.
- Oil space breakdown. This can occur in any part of the insulation since oil is the weak link in the insulation system. If the design is marginal, discharges can be initiated by particulate contamination or water in the oil. This type of breakdown usually occurs at interfaces with paper, such as at the edge of a radial spacer in a disk-to-disk space or at the edge of a spacer in a high-voltage winding to low-voltage winding space.
- Oil breakdown over long distances, as from a bushing shield to tank wall or from a lead to ground. This problem type is usually caused by overstress in the large oil gap. It can occur in marginal situations if particles or gas bubbles are present in the gap. The dielectric strength of oil is lower at low temperatures if there is an appreciable amount of water in the oil. If such breakdowns occur in very low-temperature conditions, investigate the oil strength at the low temperature as a function of the water in the oil. Consider also that the oil level may have been low by virtue of a very low temperature, causing parts normally under the oil to be exposed.
- Turn-to-turn failures. If the design is adequate, such failures can result from mechanical weakness in the paper or from damage during short circuits if the paper is brittle due to thermal aging or oxidation. These failures usually are associated with fast transients such as lightning.
- Extensive treeing in areas of high oil velocity, such as the oil entrance to the windings in forced-cooled designs. This can be associated with static electrification and usually occurs when the oil temperature is less than 40°C and all pumps are in operation.
- Discharges or failure originating from joints in leads. This type of failure usually results from the paper not being tight at the joint in the tape. Discharges start in the oil space at the surface of the cable and propagate out through the joint.
- IEEE C57.125, *Guide for Failure Investigation, Documentation, and Analysis for Power Transformers and Shunt Reactors* [2], contains a comprehensive treatment of insulation system failure and analysis of the relative voltage stresses that can lead to discharges.

23.5.1.2.2 Thermal or Oxidation Failure Modes

- Deteriorated insulation at the end turns of core-form transformers or on the outer turns of line coils in shell-form designs. Such deterioration is caused by local hot spots. The eddy losses are higher in these regions, and the designer may have used added insulation in some regions that have high electrical stress.
- Overheated lap leads. This usually occurs because the designer has used added insulation on the leads. The leads may have added eddy loss because they are in a high leakage flux field.
- Leads with brown or black paper at the interface of the conductor. This results from excessive paper insulation on the lead. This results from excessive paper insulation on the lead impeding the dissipation of conductor heat. What was intended to be dielectric insulation has become thermal insulation.
- Joints with deteriorated paper. The resistance of the joint may be too high, or there may be leakage flux heating if the connector is wide.
- Damaged paper or pressboard adjacent to the core or core supports. This type of heating is usually the result of leakage flux heating in the laminations or core joints.
- Paper has lost much of its tensile strength, but there have been no thermal stresses. This is the result of excessive oxygen in the oil. In the initial stages of the process, the outer layers of paper will have more damage than the inner layers.

www.EngineeringEbooksPdf.com

23.5.1.2.3 Magnetic-Circuit Heating

- Large gaps at joints can result in localized saturation of the core. The gap area will be black, and there may be low levels of methane, ethane, and some hydrogen.
- Local heating on the surface or at joints. Such heating is caused by excessive burrs on the edges or at end cuts of the laminations.
- Burning at the joint of outer laminations. This can be caused by circulating currents in the outer laminations of cores. It results from an imbalance in leakage flux.

23.5.1.2.4 Short-Circuit Failure Modes

- Failure at the ends of shell-form coils. This type of failure results from inadequate support of the outer layers of the coils.
- Beam bending between spacers in either shell- or core-form design, which is caused by stresses higher than the beam strength of the conductor. Missing spacers can also be involved.
- Buckling of inner winding in core-form construction. This results from inadequate strength of the conductor or inadequate spacer support. The evidence is radial distortion of the winding.
- Telescoping of conductors. This occurs in windings with a thin conductor where there is not adequate support by an inner cylinder. The layers slip over adjacent layers.
- Lead distortion.
- Turns or disks telescoping over the end insulation or supports. This results from high axial forces in combination with insulation that may not have been properly dried and compressed.

Short-circuit failures are mechanical failures where the forces *internal* to the transformer generated by the current feeding the *external* fault through the windings. This results in movement of insulation or conductor, which can lead to collapse, breakage, or stretching of insulation and/or conductor. When winding movement or an internal short occurs, magnetic fields and force vectors become abnormal. Stresses may be placed on materials that the designer could not anticipate. The resulting damage can make it difficult to determine the first cause.

23.5.1.3 Examples of Multiple Failure Modes

It is important to consider that many problems and failures are a combination of events or problems. Some examples will be used to illustrate the technique.

23.5.1.3.1 Example of Excessive Water in the Solid Insulation of a Transformer

Measured water in the oil is high, particularly after the transformer has been loaded and the oil is hot. (At elevated temperatures, water transitions from the paper to the oil rather quickly.)

- Power factor of the insulation is increasing.
- The hydrogen content of the oil is increasing.
- The dielectric strength of the oil is decreasing when tested in accordance with *ASTM Standard D1816* [13].

This analysis indicates that the insulation has excessive water and it should be dried. This conclusion could have been made without the power-factor measurements.

23.5.1.3.2 Example of Excessive Oxygen in the System (Usually Recognized as >3000 ppm of Oxygen in the Oil)

- Generation of CO is high.
- There is no history of overloads.
- Design analysis indicated no excessive hot spots.

www.EngineeringEbooksPdf.com

- Oxygen appears to vary as the CO increases. (The oxygen is being consumed by the process that forms CO.)
- Internal inspection indicated that the outer layers of paper on a taped cable had greater deterioration than the inner layers.

23.5.1.3.3 Example of Multiple Causes

The importance of keeping good records of transformer operation and maintenance events and of making a complete analysis of all data involved in problem solving cannot be overemphasized. Many failures and problems result from multiple causes. The following example demonstrates the importance of diligent investigations:

- Transformer experienced a severe short circuit as the result of a through-fault on the system. Transformer did not fail.
- Oxygen in the oil had been high—4000 ppm or higher for years.
- Transformer had history of high CO generation.
- Failure occurred some months after a switching event.

The failure was at first attributed to the switching event alone. However, the investigation showed that it was initiated by damage to brittle insulation, probably during the short-circuit event. The brittle condition was caused by the high oxygen in the system. The overvoltage involved in the switching event caused the failure at the damaged paper location.

Another important factor in problem and failure analysis is to use two experienced persons when possible. Each can challenge the ideas expressed by the other and offer suggestions for different approaches in the investigation. Experience has shown that a better analysis results when using this approach.

23.5.1.4 Other Failure Modes

- Part-winding resonance
- Static electrification
- Arrester failure
- Component failure (gas relay, bushing, LTC, DETC)
- Core-bolt insulation failure
- Shorted core lamination
- Clamping structure failure

23.5.2 Analysis of Current and Voltage Waveforms

It is important to determine which phase (or phases) of a three-phase transformer or bank of single-phase transformers is (are) involved in a short circuit. Sophisticated measuring devices exist and are often part of the protective scheme for modern transformer installations. High-speed recording devices, like oscillographs and digital recorders, can provide records of the current and voltage wave-shapes before, during, and after the fault. Some of these devices will provide current magnitude and phase angle (from a reference value) of the currents and voltages and a precise time record which facilitates analysis in conjunction with similar record extracted from another point in the system. Determine, from these devices, the magnitude of the fault and the phase(s) involved by determining which phase voltages distorted because of the IZ drop. Take into account the winding connections when calculating the current flowing in the windings of the transformer. Subsequent investigation should concentrate on this (or these) phase(s).

www.EngineeringEbooksPdf.com

23.5.3 Analysis of Short-Circuit Paths

Observe any evidence of arc initiation and terminus. Signs of partial discharge or streamers across insulation parts may be found. The impurity that initiated the arc may have been destroyed by the ensuing arc. An accurate short-circuit current can lead to analysis of the location of the fault by determining the impedance to the fault location, even if the location is inside the transformer winding. Electrical failures are frequently dielectric system (insulation) failures. Be aware that the short circuit may have caused internal components to move to the degree that subsequent and visibly evident fault path occurred which is not the initiating event.

23.5.4 Analysis of Mechanical Stresses

Observe any evidence of misalignment of winding components. Coil or insulation that has shifted indicates a high level of force that may have broken or abraded the insulation. This mechanical failure will then manifest itself as an electrical breakdown.

Each type of windings has specific failure modes. Many of these have been listed in the preceding Section 23.5. Core-form transformers have many different winding arrangements, such as disk windings, layer windings, helical windings, and other variations. Figure 23.1 helps explain the forces and stresses in a concentric circular winding. Figure 23.2 describes the same force vectors in rectangular windings. Though not shown, a shell-form winding exhibits similar forces.

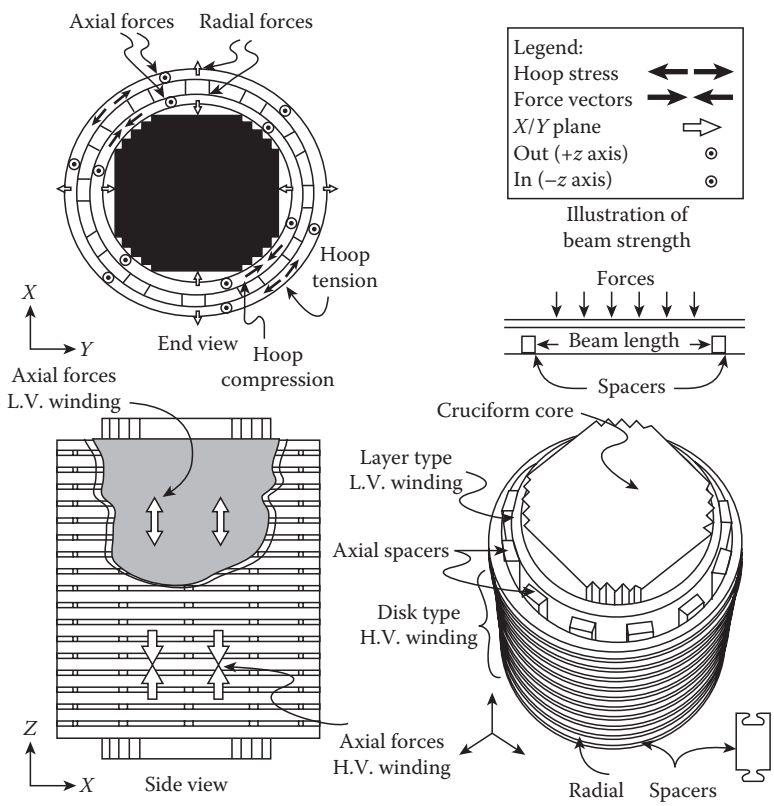

FIGURE 23.1 Concentric circular winding. (From IEEE *Guide for Failure Investigation, Documentation, and Analysis for Power Transformers and Shunt Reactors*, C57.125–1991, Copyright 1991, IEEE. With permission.)

www.EngineeringEbooksPdf.com

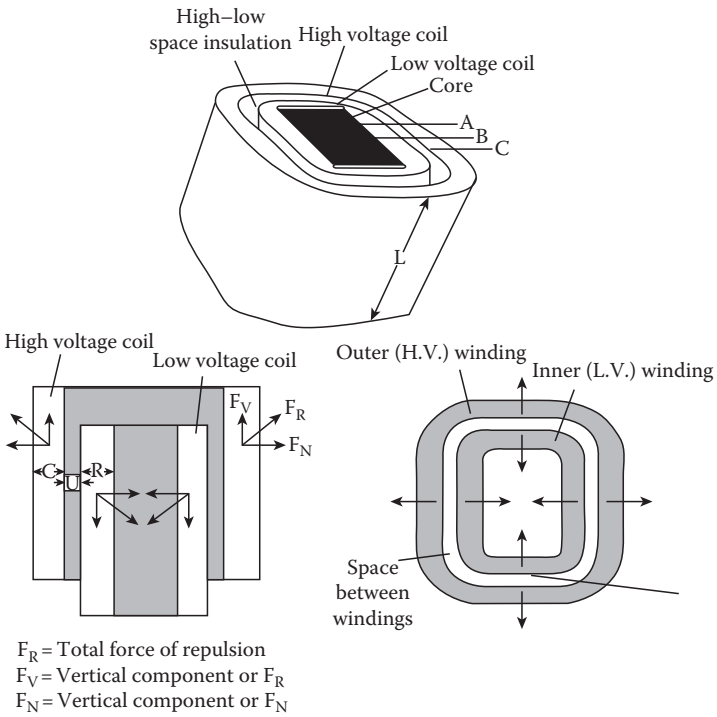

FIGURE 23.2 Rectangular winding. (From *IEEE Guide for Failure Investigation, Documentation, and Analysis for Power Transformers and Shunt Reactors*, C57.125–1991, Copyright 1991, IEEE. With permission.)

23.6 Report of Failure Investigations

Following all data collection, a preliminary report of failure investigation should be prepared. This consists of describing the circumstances of the failure and the probable cause of the failure derived from the established facts. All relevant data collected should be included.

The preliminary report should be shared with all stakeholders in the event, such as independent system operator (if appropriate), manufacturer, and operator. They should each be given an opportunity to dispute or refute facts and opinions in the preliminary report.

A final report in the format recommended by C57.117 or other similar format should be filed for future reference. This final report, including the "minority" or dissenting opinions, will become a valuable reference in future investigations involving similar transformers.

23.7 Special Considerations

23.7.1 Personal Injury

The first person on the scene following an incident involving personal injury must preserve as much evidence as possible. While protection of human life is the first priority, make note as soon as possible of the situation existing at the time of the failure. The responsibility of making the necessary observations and recording the data falls on the first technical person on the scene. Interview witnesses and record indicators to preserve as much data as possible.

23.7.2 Safety

Every possible safety precaution should be observed when dealing with power transformers. The power system has lethal voltages, and even when a unit is de-energized by automatic action of the protective

www.EngineeringEbooksPdf.com

scheme, the possibility of hazardous voltages remains. All OSHA and electric utility safety requirements must be followed to ensure that workers, investigators, and the public are protected from harm. This includes, but is not limited to, isolation and grounding of devices, following applicable tagging procedures, use of personal protective gear, following confined space regulations, and barricading the area to prevent ingress by unauthorized or unqualified individuals.

- Lock-out/tag-out procedures must be followed in all cases where one is approaching the transformer within the clear distances defined by codes and standards (e.g., IEEE C2, *National Electrical Safety Code* [19]).
- Electrical testing requires that lock-out/tag-out procedures be followed (obtaining clearances) and then treatment of the test specimen as an energized component until tests are completed and all hazardous voltages have been removed and safety grounds are restored.
- Fall safety procedures must be followed any time one is on top of the transformer tank to perform diagnostic tests.
- Confined space requirements must be met, including oxygen content monitoring, supplying breathing air, upper and lower explosive limit measurements, and taking precaution against introducing contamination or dropping parts or tools into the tank whenever an internal inspection is undertaken.

References

1. IEEE C57.117, *Guide for Reporting Failure Data for Power Transformers and Shunt Reactors on Electrical Power Systems*. Institute of Electrical and Electronics Engineers, Inc., New York.
2. IEEE C57.125, *Guide for Failure Investigation, Documentation, and Analysis for Power Transformers and Shunt Reactors*. Institute of Electrical and Electronics Engineers, Inc., New York.
3. IEEE C37.91, *Guide for Protecting Power Transformers*. Institute of Electrical and Electronics Engineers, Inc., New York.
4. IEEE C62.11, *Standard for Metal-Oxide Surge Arresters for AC Power Circuits* ($\geq$1 kV). Institute of Electrical and Electronics Engineers, Inc., New York.
5. IEEE C62.22, *Guide for the Application of Metal-Oxide Surge Arresters for Alternating-Current Systems*. Institute of Electrical and Electronics Engineers, Inc., New York.
6. IEEE C57.109, *Guide for Liquid-Immersed Transformer Through-Fault Duration*. Institute of Electrical and Electronics Engineers, Inc., New York.
7. IEEE C57.91, *Guide for Loading Mineral-Oil-Immersed Transformers*. Institute of Electrical and Electronics Engineers, Inc., New York.
8. IEEE C57.96, *Guide for Loading Dry-Type Distribution and Power Transformers*. Institute of Electrical and Electronics Engineers, Inc., New York.
9. ANSI C84.1, American National Standard for Electric Power Systems and equipment voltage ratings (60 Hertz). Institute of Electrical and Electronics Engineers, Inc., New York.
10. IEEE C57.12.00, *Standard General Requirements for Liquid-Immersed Distribution, Power, and Regulating Transformers*. Institute of Electrical and Electronics Engineers, Inc., New York.
11. IEEE C57.12.01, *Standard General Requirements for Dry-Type Distribution and Power Transformers Including those with Solid-Cast and/or Resin-Encapsulated Windings*. Institute of Electrical and Electronics Engineers, Inc., New York.
12. IEEE C57.104, *Guide for Interpretation of Gases Generated in Oil-Immersed Transformers*. Institute of Electrical and Electronics Engineers, Inc., New York.
13. ASTM D1816, Standard test method for dielectric breakdown voltage of insulating oils of petroleum origin using VDE electrodes. ASTM International, West Conshohocken, PA.
14. ASTM D1533, Standard test method for water in insulating liquids by Coulometric Karl Fischer Titration. ASTM International, West Conshohocken, PA.

www.EngineeringEbooksPdf.com

15. ASTM D924, Standard test method for dissipation factor (or power factor) and relative permittivity (dielectric constant) of electrical insulating liquids. ASTM International, West Conshohocken, PA.
16. ASTM D1500, Standard test method for ASTM color of petroleum products (ASTM color scale). ASTM International, West Conshohocken, PA.
17. ASTM D971, Standard test method for interfacial tension of oil against water by the ring method. ASTM International, West Conshohocken, PA.
18. IEEE C57.149, *Guide for the Application and Interpretation of Frequency Response Analysis for Oil Immersed Transformers*. Institute of Electrical and Electronics Engineers, Inc., New York.
19. IEEE C2, *National Electrical Safety Code*. Institute of Electrical and Electronics Engineers, Inc., New York.

www.EngineeringEbooksPdf.com

24

On-Line Monitoring of Liquid-Immersed Transformers

24.1 Benefits **24**-2
Maintenance Benefits • Equipment Usage Benefits • Strategic Benefits
24.2 On-Line Monitoring Systems **24**-3
Intelligent Electronic Devices • Computer • Data Analysis
24.3 Power Transformer Core, Coil, and Insulation System Applications **24**-4
Dissolved-Gas-in-Oil Analysis • Moisture in Oil • Partial Discharge Detection • Temperatures • Insulation Power Factor Testing • Pump/Fan Operation
24.4 Bushing Applications **24**-14
Failure Mechanisms Associated with Bushings • On-Line Bushing Power-Factor and Capacitance Measurements
24.5 Load Tap Changer Applications **24**-15
Mechanical Monitoring and Analysis of Load Tap Changers • Thermal Monitoring of Load Tap Changers • Dissolved-Gas Analysis
24.6 Instrument Transformer Applications **24**-19
Failure Mechanisms Associated with Instrument Transformers • Instrument Transformer On-Line Monitoring Methods
References **24**-22

Gary R. Hoffman
Advanced Power Technologies

On-line monitoring of transformers and associated accessories by measuring certain parameters or conditions while energized is an important consideration in their operation and maintenance. The justification for on-line monitoring is driven by the need to increase the availability of transformers, to facilitate the transition from time-based and/or operational-based maintenance to condition-based maintenance, to improve asset and life management, and to enhance failure-cause analysis. There are four major accessories in a transformer where solutions exist for on-line monitoring. They include the insulation system including the transformer insulating fluid and oil preservation system, the coil and core assembly, bushings, and, if so equipped, its load tap changing equipment. Historically, it has been found that issues that evolve into failures occur in one of these four accessories and therefore are good candidates for on-line monitoring.

This chapter covers most of the on-line monitoring methods that are currently in use, including their benefits, system configurations, and application to the various operational parameters and accessories that can be monitored. For the purposes of this section, the term *transformer* refers, but is not limited,

www.EngineeringEbooksPdf.com

to step-down power transformers; generator step-up transformers; autotransformers; phase-shifting transformers; regulating transformers; intertie transmission transformers; dc converter transformers; high-voltage instrument transformers; and shunt, series, and saturable reactors.

24.1 Benefits

Various issues must be considered when determining whether or not the installation of an on-line monitoring system is appropriate. When deciding whether to apply a monitoring system consideration should be given to the transformer's age, prior condition, loading, and availability of budget. In addition, great benefit can be obtained by considering systems that migrate the user from time-based maintenance to condition-based maintenance. An aging transformer with critical functions, or that is critical to system reliability, is a candidate for on-line monitoring of certain key parameters. Monitoring equipment can also be justified for transformers with load tap changers (LTCs). This is especially important for LTCs that have a history of coking or other types of problems. Further, monitoring systems may be warranted for transformers with symptoms of overheating, partial discharge (PD), excessive aging, bushing problems, evidence of excessive moisture, increasing concentrations of key gases, or measured degradation of the dielectric integrity of the insulation system. Finally, it is often easier to justify adding monitoring on new transformers as opposed to existing infrastructure.

Both direct and strategic benefits can arise from the installation of on-line monitoring equipment. Direct benefits are cost-saving benefits obtained strictly from changing maintenance activities from time-based to condition-based assessment. Condition-based maintenance reduces expenses by driving down the frequency of equipment inspections thereby reducing or delaying active interventions (repair, replacement, etc.) on the equipment. Strategic benefits are based on the ability to prevent, mitigate, or avoid catastrophic failures. These benefits can be substantial, since failures can be damaging and costly. Benefits in this category include better safety (preventing injuries to workers or the public in the event of catastrophic failure), protection of the equipment, and avoiding the potentially large impact caused by system instability, loss of load, environmental cleanup, etc.

24.1.1 Maintenance Benefits

Maintenance benefits represent resources saved in maintenance activities by the application of on-line monitoring as a predictive maintenance technique to transition to condition-based maintenance. On-line monitoring can mitigate or eliminate the need for manual time-based or operation-based inspections by identifying problems as they are occurring and allowing corrective actions to be implemented before larger problems develop.

24.1.2 Equipment Usage Benefits

Equipment usage benefits arise because additional reinforcement capacity may be deferred or planned with higher confidence because on-line monitoring and diagnostics allow more effective utilization of existing equipment. On-line monitoring equipment can continuously provide real-time capability limits, both operationally and in terms of equipment life.

24.1.3 Strategic Benefits

Strategic benefits are those that accrue when the results of system failures can be mitigated, reduced, or eliminated. A key feature of on-line monitoring technology is its ability that recognizes at an early stage and forestalls catastrophic failures. The value of the technology is its ability to lessen the occurrence of such failures.

www.EngineeringEbooksPdf.com

24.1.3.1 Service Reestablishment Benefits

Service reestablishment benefits represent the reduced need for repair and/or replacement of damaged equipment because on-line monitoring has been able to identify a component failure in time before catastrophic damage occurs. Unscheduled repairs can be very costly in terms of repair of equipment damage, its potential impact on worker/public safety, public relations, and a possible loss in revenue.

24.1.3.2 System Operations Benefits

System operations benefits represent the avoidance of operational adjustments to the power system as a result of having identified the component failure prior to a general failure. System adjustments, in the face of a delivery-system breakdown, can range from negligible to significant. An example of a negligible adjustment is when the failure is in a noncritical part of the network and adequate redundancy exists. Significant adjustments are necessary if the failure causes large, base-load generation to experience a forced outage or if contractual obligations to independent generators cannot be met. These benefits are driven in part by the duration of the resulting circuit outage.

24.1.3.3 Outage Benefits

Outage benefits represent the impact of component failure and resulting system breakdown on end-user customers. A utility incurs direct revenue losses as a result of a system or component failure. Utility customers, in turn, may also experience losses during failures. The magnitude and/or frequency of such losses may result in the customer's loss of significant revenues.

24.2 On-Line Monitoring Systems

Today, many equipment and solution choices exist that allow implementation of an on-line monitoring system. The choices vary from complete solutions with sensors and software to individual intelligent electronic devices (IEDs) for monitoring individual or several parameters like temperature, loads, gases, moisture, etc. The individual IEDs normally provide sensors, a method of providing the data, and software to analyze the data monitored to provide alarms when one or more of the monitored parameters are beyond preset limits. There are also several methods offered to communicate the monitored data. These range from traditional 0 to 1 mA or 4 to 20 mA current loops to digital communications utilizing industry standard protocols such MODBUS, DNP3, IEC 61850, etc. These data are often provided through a digital control system (DCS) in power plants or to energy management systems (EMS) via a user's supervisory control and data acquisition (SCADA) system for control center personnel and stored via a historian for use by design, maintenance, and planning personnel. In addition, some IEDs can provide data via a serial communications link or via the Internet over a local area network (LAN) or wide area network (WAN). Data provided over a dedicated communications channel can be especially useful to maintenance personnel.

24.2.1 Intelligent Electronic Devices

IEDs utilize sensors to obtain the physical parameters that the device is designed to measure. The IED contains the interface electronics with required resolution and accuracy to accomplish this task. The sensors connected to these devices can be either passive or active to measure electrical, thermal, chemical, or other physical parameters. Examples of IEDs include electronic temperature monitors (ETMs), on-line dissolved-gas analyzers, on-line bushing monitors, on-line PD monitors, direct fiber winding temperature indicators, and electronic tap position monitors as well as other devices that measure and report the physical quantities measured.

IEDs may contain built-in algorithms that use measured values from the sensors. These algorithms, in turn, provide condition-based alarms which can be outputted via relay contacts or embedded in a

www.EngineeringEbooksPdf.com

communications protocol such as DNP3. These alarms facilitate implementation of condition-based maintenance without relying on creating or purchasing software using data gathered by the EMS or DCS.

IEDs communicate their data using several means. One method is to use analog current loop outputs of either 0–1 mA or 4–20 mA. Most of the IEDs on the market currently provide loop power; however, it is important to check as an external power supply may be required.

A second means is to use digital communications using proprietary or industry standard protocols such as MODBUS, DNP3, or IEC61850. Protocols MODBUS or DNP3 can be communicated via a serial interface, and if provided, the IED can transport this information via transmission control protocol and Internet protocol also known as TCP/IP. Because of bandwidth requirements, IEC61850 must utilize TCP/IP.

Another method, if the IED is capable of supporting, is to provide data, data graphs, and alarms via a LAN or WAN using its own web server. Data can be viewed or transferred via a simple web browser.

24.2.2 Computer

In all monitoring systems, there will be a computer where the database of transformer data is stored or where software to analyze the data resides. The computer may be located at one central location which may be in the substation control house, the same computer that hosts the software for the EMS or DCS, or a computer in the same physical location where the EMS or DCS resides. The computer also can be anywhere the user is located. In this case, the monitoring system communicates its data serially or using TCP/IP directly to the user's computer. Determination of computer's location is driven by the architecture of the monitoring system implemented.

24.2.3 Data Analysis

In the event that the monitoring system or components do not have analysis software, software will be required and hosted on a computer as described earlier. This software can range from a data historian to analysis software capable of alerting the user to conditions which may require immediate attention. For example, a transformer's top-oil temperature can be directly used, while a bushing's sum current waveform requires additional processing to calculate the fundamental frequency (50 or 60 Hz) phasor. The data are then compared with some limit or set point derived through experience.

Some analysis software may feature the ability to be trained so that the software can learn from normal operating conditions to generate baseline values for comparison. The term used to identify systems that can learn from experience are called adaptive because they will utilize correlation and filtering algorithms to separate changes due to variations in ambient and operating conditions. These systems work by accumulating data during a specified period of time and use statistical evaluation to either accept or reject the data. In some applications, the rejected data are still saved, but they are not used in the calculation of the initial benchmark. In other applications, the initial benchmark is determined using only the accepted data.

24.3 Power Transformer Core, Coil, and Insulation System Applications

Various basic parameters of power transformers, LTCs, instrument transformers, and bushings can be monitored with available sensor technologies. Transformer problems can be characterized as those that arise from defects and develop into incipient faults, those that derive from deterioration processes, and those induced by operating conditions that exceed the capability of the transformer. These problems may take many years to gestate before developing into a problem or failure. However, in some cases, undesirable consequences can be created quite precipitously by a through-fault on a transformer that has a compromised insulation system.

www.EngineeringEbooksPdf.com

Deterioration processes relating to aging are accelerated by thermal stresses, voltage stresses, and the presence of moisture. Increasing levels of temperature, oxygen, moisture, and other contaminants significantly contribute to insulation degradation. The deterioration is particularly accelerated in the presence of catalysts and/or through-faults and by mechanical or electromechanical wear. Characteristics of the deterioration processes include sludge accumulation, weakened mechanical strength of insulation materials such as paper-wrapped conductors, and shrinkage of materials that provide mechanical support. Excessive moisture accelerates the aging of insulation materials over many years of operation. Extreme thermal transients that can occur during some loading cycles and high moisture content can result in water vapor bubbles. The bubbles can cause serious reduction in dielectric strength of the insulating liquid, resulting in a failure.

The processes causing eventual problems (e.g., shrinkage of the insulation material or excessive moisture) may take years to evolve, but the consequences can appear suddenly. Continuous monitoring permits timely remedial action: not too early (thus saving valuable maintenance resources) and not too late (which would have costly consequences). Higher loading can be tolerated, as continuous automated evaluation will alert users of conditions that could result in failure or excessive aging of critical insulation structures (Griffin, 1999).

Table 24.1 lists the major transformer components along with their associated problems and the parameters that can be monitored on-line to detect them.

24.3.1 Dissolved-Gas-in-Oil Analysis

Dissolved-gas-in-oil analysis (DGA) of certain key gases has proved to be a valuable and reliable diagnostic technique for the detection of incipient fault conditions not only within liquid-immersed transformers but also LTCs and bushings. DGA has been widely used throughout the industry as the primary diagnostic tool for transformer maintenance, and it is of major importance in a transformer owner's loss-prevention program.

Data have been acquired from the analysis of oil samples from electrical equipment in the factory, laboratory, and field installations over the years. A large body of information relating certain fault conditions to the various gases that can be detected and easily quantified by gas chromatography has been developed. The gases that are generally measured and their significance are shown in Table 24.2 (Griffin, 1999) and are considered key gases. Griffin provides methods for interpreting fault conditions associated with various gas concentration levels and combinations of these gases (Griffin, 1999).

Laboratory-based DGA programs are typically conducted on a periodic basis dictated by the application or transformer type. Problems with short gestation times may go undetected when testing is conducted between normal laboratory test intervals. Installation of on-line gas-in-oil monitors may detect the start of incipient failure conditions, thus allowing the user to confirm the presence of a suspected fault through laboratory DGA testing. These systems can provide a contact closure and/or a binary alarm point for remote indication when a specific key gas exceeds a predetermined threshold. Individual gas concentration can also be reported either via a current loop output or as a digital value for transmission to a central location for analysis and logging. Such an alarm might enable the user to plan necessary steps required to identify the fault and implement corrective actions. Existing technology can determine gas type, concentration, trending, and production rates of generated key gases. The rate of change of the key gases dissolved in oil is a valuable diagnostic that is useful in determining the severity of a developing fault or problem. A conventional unscheduled gas-in-oil analysis is typically performed after an alarm condition has been reported. The application of on-line dissolved-gas monitoring considerably reduces the risk of detection failure or of a delay in detecting fault initialization because of the typically long intervals between on-site oil sampling.

Laboratory-based sampling and analysis with a frequency sufficient to make real-time decisions becomes impractical and too expensive. For critical transformers, on-line gas-in-oil monitors can provide timely and continuous information in a manner that permits load adjustments to prevent excessive

www.EngineeringEbooksPdf.com

TABLE 24.1 Main-Tank Transformer Components, Failure Mechanisms, and Measured Signals

Component			
General	Specific	Phenomenon	Measured Signals
Noncurrent-carrying metal components	Core	Overheating of laminations	Top and bottom temperatures
			Ambient temperature
			Line currents
			Voltage
			Hydrogen (minor overheating)
			Multigas, particularly ethane, ethylene, and methane (moderate or severe overheating)
	Frames	Overheating due to circulating currents, leakage flux	Top and bottom temperatures
	Clamping		Ambient temperature
	Cleats		Line currents
	Shielding		Voltage
	Tank walls		Multigas, particularly ethane, ethylene, and methane
	Core ground	Floating core and shield grounds create discharge	Hydrogen or multigas
	Magnetic shield		Acoustic and electric PD
Winding insulation	Cellulose: paper, pressboard, wood products	Local and general overheating and excessive aging	Top and bottom temperatures
			Ambient temperature
			Line currents
			RS moisture in oil
			Multigas, particularly carbon monoxide, carbon dioxide, and oxygen
		Severe hot spot	Top and bottom temperatures
		Overheating	Ambient temperature
			Line currents
			Moisture in oil
			Multigas, particularly carbon monoxide, carbon dioxide, ethane, hydrogen, and oxygen
		Moisture contamination	Top and bottom temperatures
			Ambient temperature
			Relative saturation of moisture in oil
		Bubble generation	Top and bottom temperatures
			Ambient temperature
			Total percent dissolved gas in oil
			Line currents
			Relative saturation of moisture in oil
			Hydrogen
			Acoustic and electric PD
		PD	Hydrogen or multigas
			Acoustic and electric PD

www.EngineeringEbooksPdf.com

TABLE 24.1 (continued) Main-Tank Transformer Components, Failure Mechanisms, and Measured Signals

Component			
General	Specific	Phenomenon	Measured Signals
Liquid insulation		Moisture contamination	Top and bottom temperatures
			Ambient temperature
			Relative saturation of moisture in oil
		PD	Hydrogen
			Acoustic and electric PD
		Arcing	Hydrogen and acetylene
		Local overheating	Ethylene, ethane, methane
Cooling system	Fans	Electrical failures of pumps and fans	Motor (fan, pump) currents
	Pumps		Top-oil temperature
	Temperature-measurement devices		Line currents
		Failure or inaccuracy of top liquid or winding temperature indicators or alarms	Ambient temperature
	Internal cooling path	Defects or physical damage in the directed flow system	Top and bottom temperatures
			Line currents
			Top and bottom temperatures
			Ambient temperature
			Line currents
		Localized hot spots	Carbon monoxide and carbon dioxide
	Radiators and coolers	Internal or external blocking of radiators resulting in poor heat exchange	Top and bottom temperatures
			Ambient temperature
			Line currents
Oil and winding temperature forecasting		Overloading of transformer	Top and bottom temperatures
			Ambient temperature
			Line currents
			Moisture in oil
			Multigas, particularly carbon monoxide, carbon dioxide, and oxygen

Source: Based on IEEE, *Guide for the Interpretation of Gases Generated in Oil-Immersed Transformers*, IEEE Std. C57.104, Institute of Electrical and Electronics Engineers, Piscataway, NJ. With permission.

gassing from thermal-type faults. This can keep a transformer operating for many months while ensuring that safety limits are observed.

24.3.1.1 Gas Sensor Development

Early attempts to identify and document the gases found in energized transformers date from 1919. This analysis was conducted by liquid column chromatography (Myers et al., 1981). An early type of gas monitor, still in use in many locations, is a device similar to the Buchholz relay, which was developed in the late 1920s. This type of relay detects and measures the pressure of free gas generated in the transformer and initiates an alarm signal.

The gas chromatograph was first applied to transformers in the early 1960s. Its ability to differentiate and quantify the various gases that are generated and found in the insulating oil of transformers and

www.EngineeringEbooksPdf.com

TABLE 24.2 Gases Typically Found in Transformer Insulating Liquid under Fault Conditions

Gas	Chemical Formula	Predominant Source
Nitrogen	N_2	Inert gas blanket, atmosphere
Oxygen	O_2	Atmosphere
Hydrogen[a]	H_2	PD
Carbon dioxide	CO_2	Overheated cellulose, atmosphere
Carbon monoxide[a]	CO	Overheated cellulose, air pollution
Methane[a]	CH_4	Overheated oil (hot metal gas)
Ethane[a]	C_2H_6	Overheated oil
Ethylene[a]	C_2H_4	Very overheated oil (may have trace of C_2H_2)
Acetylene[a]	C_2H_2	Arcing in oil

[a] Denotes combustible gas. Overheating can be caused both by high temperatures and by unusual or abnormal electrical stress.

other electrical equipment has proven quite useful (Myers et al., 1981). Beginning in the late 1970s and continuing to the present, efforts have been made to develop a gas chromatograph for on-line applications. These efforts have been focused on analyzing gases in the gas space of transformers and on extracting the gases from transformer oil and injecting the gases into the gas chromatograph. Recently, on-site laboratory-quality analyses have become available utilizing a portable gas chromatograph that is not permanently connected to the transformer.

In the 1980s and early 1990s, an alternative method to using gas chromatography was developed. Sensors based on fuel-cell technology and thermal conductivity detection (TCD) were developed. Both methods use membrane technologies to separate dissolved gases from the transformer oil and produce voltage signals proportional to the amount of certain dissolved gases. The fuel-cell sensor detects hydrogen and carbon monoxide together with small amounts of other hydrocarbon gases. This method has been successful in providing an early warning of incipient faults initiated by the dielectric breakdown of the insulating fluid and the cellulose found in the insulation system.

During the mid-1990s, a multigas on-line DGA monitor that could detect and quantify the gas concentrations in parts per million (ppm) was developed (Chu et al., 1993, 1994). This monitor samples all seven key gases and was designed to provide sufficient dissolved-gas data, ensuring that analysis and interpretation of faults could take place on-line using the criteria provided in IEEE standards (IEEE C57.104). The sampling approach is noninvasive, with both the extraction and sensor systems external to the transformer (Glodjo, 1998). The system takes multiple oil samples per day and senses changes in the absolute values of gas concentrations and in the ratios of the concentrations of particular selected gases. This information is analyzed along with the transformer load and temperature levels, environmental conditions, and known fault conditions from repair records and diagnostic software programs.

A second system developed uses membrane extraction technology combined with infrared spectroscopy (FTIR) sensing for all gases except hydrogen. For hydrogen, this system uses fuel-cell technology. It can also detect all seven key gases (per IEEE Std. C57.104). A third system relies on photo-acoustic spectroscopy that senses all key gases.

24.3.2 Moisture in Oil

The measurement of moisture in oil is a routine test (in addition to other physical characteristics of the oil) performed in the laboratory on a sample taken from the transformer. The moisture level of the sample is evaluated with the sample temperature and the winding temperature of the transformer. This combination of data is vital in determining the relative saturation of moisture in the cellulose/liquid insulation system that establishes the dielectric integrity of the transformer. Moisture in the transformer reduces the insulation strength by decreasing the dielectric strength of the transformer's

www.EngineeringEbooksPdf.com

insulation system. As the transformer warms up, moisture migrates from the solid insulation into the fluid. The rate of migration is dependent on the conductor temperature and the rate of change of the conductor temperature. As the transformer cools, the moisture returns to the solid insulation at a slower rate. The time constants for these migrations depend on the design of the transformer and the solid and liquid components in use. The combination of moisture, heat, and oxygen are the key conditions that lead to accelerated degradation of the cellulose. Excessive amounts of moisture can accelerate the degradation process of the cellulose and prematurely age the transformer's insulation system. The existence of a particular type of furanic compound in the oil is also an indication of moisture in the cellulose insulation.

Moisture-in-oil sensors were first successfully tested and used in the early 1990s (Oommen, 1991, 1993). The sensors measure the relative saturation of the water in oil, which is a more meaningful measure than the more familiar units of parts per million (ppm). Continuous measurements allow for detection of the true moisture content of the transformer insulation system and of the hazardous conditions that may occur during temperature cycling, thereby helping to prevent transformer failures.

Sensor technology to monitor moisture in the insulating fluid is capacitive type. In these types of sensors, it is necessary to measure oil temperature to determine the relative saturation of moisture in oil.

24.3.3 Partial Discharge Detection

PD occurs when there is a breakdown of the transformer's insulation system's dielectric withstand capability. Dielectric breakdown of the insulation system can lead to failure of a transformer if not caught in time. PD originates in the interface between conductors and insulation materials. Typically, moisture in the insulation system, voids or cavities in solid insulation materials, metallic particles, gases produced during a fault condition, or undetected manufacturing defects like a burr on a conductor operating at elevated voltage can lead to PD. On-line monitoring of changes in PD levels can provide advance warning that some form of dielectric breakdown is occurring.

Interpreting PD detection results is complicated. It is not yet possible to determine how close the transformer is to failure based on the PD results. However, PD detection is meaningful in terms that it does indicate abnormal activity within the transformer. However, it does not indicate how close, in terms of number of hours, days, weeks, months, or even years, that transformer is to failure. Often, when PD problems are detected, they are difficult to find without the deployment of many sensors to triangulate on the source of PD.

Most transformers are tested as part of factory acceptance test to have a PD level below a specified value. From a monitoring and diagnostic view, detection of PD above this level is therefore cause for an alarm, but without substantiation from DGA, it is not necessary to take the transformer out of service for further investigation. These realities illustrate one of the many difficulties encountered in PD detection and diagnosis. The results need to be interpreted with knowledge of the studied equipment using many different kinds of sensors placed on various locations of the transformer. Two methods are used for measuring PDs: electrical and acoustic. Both methods have attracted considerable attention, but neither is able to yield an unambiguous PD measurement without additional testing.

24.3.3.1 Electrical Partial Discharge Detection

The electrical signals generated by PD event are positive or negative pulses. These signals can have a very fast rise on the order of a few nanoseconds (Morshuis, 1995). There are three basic methods to sense electrical PD: voltage, current, or radio frequency (RF) energy. There is no fundamental conversion between the procedures applicable to all cases. The signals exhibit a very wide frequency content. The high frequencies are attenuated when the signal propagates through the equipment and the network. The detected signal frequency is dependent both on the original signal and the measurement method.

Inadvertent high-energy signals from RF broadcast, power line carrier equipment, electrical equipment, and apparatus in the vicinity of the measured equipment can impair electrical PD detection.

www.EngineeringEbooksPdf.com

This interference can be mitigated through the use of a directional high-frequency field sensor (Lemke, 1987). This method is ideal for identifying that PD is present but is not ideal for determining the exact location of PD within the tank.

Another method to detect electrical PD is through the use of high-frequency current transformers (HFCTs) (Birlasekaran and Leong, 2007). The use of Rogowski coils is preferred as the bifilar winding mitigates interference from external sources. However, specially designed high-frequency split core CTs may be used as well.

A method to find and determine PD signals from voids in insulation materials is through the use of phase-resolved PD (PRPD) analysis (Gross and Soller, 2004). This method can be applied to on-line systems either through the use of capacitively coupled sensors and inductively coupled sensors through the use of an appropriate HFCT.

There have been many attempts to use neural networks or adaptive digital filters (Wenzel et al., 1995), but it is not clear if this has led to a standard method. The problem with this approach is that the measured and background signals are very similar, and the variation within each of the groups may be much larger than the difference between them. Adaptive filters and neural networks have been used to diminish other background sources such as medium-wave radio and rectifier pulses.

These methods employ a single sensor for the PD measurement. If several sensors of different types or at different locations are employed, the possibilities of reducing external influences are greatly enhanced. Generally, the multisensor approach can be split into two branches: separate detection of external signals and energy flow measurements.

When there is a clear source for the disturbing signals, it is tempting to use a separate sensor as a pickup for those and simply turn off the PD measurements when the external level is too large. Methods like this have the disadvantage of being insensitive during some portion of the measurement time. In addition, a very large signal from the equipment under study may be detected by the external pickup as well, and thusly be rejected.

24.3.3.2 Acoustical Partial Discharge Detection

Like electrical methods, acoustic methods have a long history of use for PD detection. The sensitivity can be shown to be comparable with electric sensing. Acoustic signals are generated from bubble formation and collapse during the PD event, and these signals have frequencies of approximately 100 kHz (Bengtsson et al., 1993). Like the electric signals, high frequencies are generally attenuated during propagation. Due to the acoustic velocity of the medium being traversed, acoustic signals are commonly used for location of PD sources.

The main advantage of acoustic PD is that disturbing signals from the electric network do not interfere with the measurement. However, sensor location relative to the PD source is very important. As the acoustic signal propagates from the PD source to the sensor, it generally traverses different materials. Some of these materials can attenuate the signal considerably; furthermore, each material interface further attenuates the propagated signal. Consequently, the sensitivity for PD inside transformer windings, for example, may be quite low. In typical applications, many acoustic sensors are carefully distributed around the tested equipment (Bengtsson et al., 1997; Eleftherion, 1995).

Though not disturbed by the electric network, external influences in the form of rain or wind and non-PD vibration sources, like loose parts and cooling fans, will generate acoustic signals that interfere with the PD detection. One way to decrease the external influence is to use acoustic waveguides (Harrold, 1983) that detect signals from inside the transformer tank. This solution is typically only considered for permanent monitoring of important transformers. As an alternative, phase-position analysis can be used to reject these disturbances (Bengtsson et al., 1997).

A transformer generates disturbing acoustic signals in the form of core noise, which can extend from 50 to 100 kHz. To increase the selectivity, sensors are chosen that are optimized around 150 kHz with appropriate bandpass filtering (Eleftherion, 1995). Such sensors may, however, have less sensitivity to PD

www.EngineeringEbooksPdf.com

signals as well (Bengtsson et al., 1997). The properties of these signals are such that it is relatively easy to distinguish them from PD signals; thus, their main effect is to improve selectivity.

Regarding the electric multisensor systems discussed here, there are a few descriptions of combined electric and acoustic PD monitoring systems for transformers in the literature (Wang et al., 1997). Rather elaborate software must be employed to utilize the potential sensitivity of these systems. If both the acoustic and the electric parts are designed with the previous considerations in mind and an effective software constructed, systems like this will become effective yet costly.

24.3.4 Temperatures

24.3.4.1 Ambient Temperature

Ambient temperature is the basis for all measured or calculated temperatures. It is also important to other measurements made on the transformer and transformer loading.

24.3.4.2 Top-Oil Temperature

Top-oil temperature is an important measurement of the transformer's ability to handle overload situations. Besides ambient temperature, top-oil temperature is the temperature from which the winding hottest-spot temperature is derived from calculated or simulated methods (IEEE C57.91).

24.3.4.3 Winding Temperatures

The loss of life of cellulose insulation is driven in part on winding hottest-spot temperature (IEEE, C57.91). In turn, the winding hottest-spot temperature is one of the factors that limit the maximum loading of transformers. Prolonged exposure to excessive heat results in the depolymerization of the cellulose insulation. The depolymerization process leads to a loss of both mechanical and dielectric strength of the cellulose insulation. The potential failure mode due to excessive winding temperature is manifest upon through-faults and for transformers with high concentrations of moisture.

Traditional methods involve using a heating element to raise the insulating fluid a delta temperature dictated by transformer load. This method is commonly known as the simulated winding hottest-spot temperature. Simulated winding hot spot is faster to react to sudden load changes than top-oil temperature. However, for on-line monitoring of simulated winding hottest-spot temperature is slower than other methods and is subject to drift because simulated winding hottest-spot temperature relies on a heater and calibration resistor which will change over time.

Winding hottest-spot temperature can be calculated from load current and measured top-oil temperature. This method is widely used and described as a test method (Domun, 1994; Duval and Lamarre, 1977; Feser et al., 1993; IEEE C57.91). This method is faster and tends to drift less than simulated winding hottest-spot temperature.

Consideration must be given to what load current to measure to simulate or calculate winding hottest-spot temperatures. Unless there is extreme imbalance on loading, it is only necessary to monitor one of the three phases. Typically, the center phase is selected as it is a good representation of the two outer phases. On two winding transformers, it is best to measure current from the low-voltage winding bushing CT because there is usually a de-energized tap changer (DETC) on the high-voltage winding. The position of the DETC affects the measured current and, in turn, affects the accuracy of the calculated winding temperature. For transformers with more than one winding, it is necessary to measure the load current on all three windings in order to monitor the hottest-spot temperature of the transformer. However, it is not necessary to monitor transformers with a tertiary winding where the winding is buried, used for a stabilizing winding, or is used for station service.

Winding hottest-spot temperatures can also be calculated using both bottom oil and top-oil temperatures (IEEE C57.91; Susa and Lehtonen, 2006). While much more information is required about the

www.EngineeringEbooksPdf.com

transformer is needed than the top oil model, it has shown experimental evidence of being slightly more accurate when compared to the hottest-spot temperature that is measured directly at the physical location of the transformer winding's hottest spot.

Winding hottest-spot temperature can also be measured directly using a fiber-optic temperature sensor. Direct fiber winding temperature does not require the measurement of transformer load current or top-oil temperature to obtain winding hottest-spot temperatures. These sensors can be installed in the winding only when the transformer is manufactured, rebuilt, or refurbished. Two sensor types are available: optical fibers that measure the temperature at one point and distributed optical fibers that measure the temperature along the length of the winding. Since a distributed fiber-optic temperature sensor is capable of measuring the temperature along the fiber as a function of distance, it can replace a large number of discrete sensors and allow a real-time measurement of the temperature distribution (Fox, 1983). Direct fiber winding hottest-spot temperature will provide the most accurate representation of winding hottest-spot temperature as long as the fiber-optic sensor is placed at the physical location of the hottest spot.

24.3.4.4 Bottom Oil Temperature

Bottom oil temperature, when compared to top-oil temperature, provides a good method to determine if the insulating fluid is circulating as expected within the tank. Poor oil circulation will result in higher transformer temperatures and lead to accelerated degradation of the transformer's insulation system.

24.3.5 Insulation Power Factor Testing

Power dissipated by the insulation system is caused by dielectric losses when an alternating current (ac) voltage is applied. All electrical insulation materials have measurable amount of dielectric loss, regardless of condition. Good insulation usually has a very low loss. Normal aging of an insulating material causes the dielectric loss to increase. Moisture in the insulation or contamination of insulation by chemical substances can cause losses to be higher than normal. Physical damage from electrical or mechanical stresses increase the amount of loss.

When an ac voltage is applied to insulation, the leakage current flowing through the insulation has two components, one resistive and the other capacitive. This is depicted in Figure 24.1. The power factor is a dimensionless ratio of the resistive current (I_R) to total current (I_T) flowing through the insulation and is given by the cosine of the angle θ depicted in Figure 24.1. The dissipation factor, also known as tan δ, is a dimensionless ratio of the resistive current to the reactive current flowing through the insulation and is the tangent of the angle δ in Figure 24.1. By convention, these factors are usually expressed in percent. Due to the fact that theta is expected to be large, usually approaching 90°, and delta is commensurately small, the power factor and dissipation factor are often considered to be essentially equal.

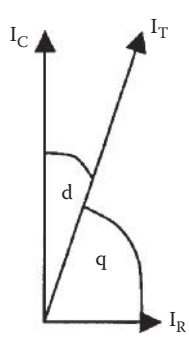

FIGURE 24.1 Power-factor graphical representation.

www.EngineeringEbooksPdf.com

The dissipation factor is also affected by temperature. Insulation with a low content of moisture will show reduced ac resistance and stable capacitance at increasing temperature. Wetter insulation with increasing temperature will show increases in capacitance with decreasing ac resistance. Dry insulation will have the highest value of resistance. As moisture is absorbed at constant temperature, the value of resistance becomes lower and increasing capacitance.

Measuring tan δ is normally done at a range of frequencies from 15 to 400 Hz which is practical for off-line testing but not for on-line testing. Research work continues to implement a practical on-line testing methods and instruments for on-line testing of insulation power factor, but none exist at the present time.

24.3.6 Pump/Fan Operation

Proper operation of fans and pumps are crucial in maintaining transformer temperatures and hence maintain transformer life. Continuous on-line monitoring of fans and pumps permits determination if these devices are operating as they should. This is accomplished by measuring the currents drawn by pumps and fans when the cooling system is commanded on. IEDs with the capability to measure current can be deployed to measure the operating current of the fans and/or pumps within predefined operating limits as depicted in Figure 24.2. After start-up, normally, operating fans and/or pumps will be working in a normal operating range with a specific nominal operating current. Abnormal operation from a worn motor bearings, materials obstructing fan blades or pump impellers, or an evolving failure of a motor stator or field winding will result in a current above a predefined timed over current threshold. Further, open-circuit conditions or detached fan blades or pump impellers will result in reduced current that can be detected with a predefined timed undercurrent threshold. This information in conjunction with information that indicates cooling has been commanded from an automatic control device such as an ETM, or manual control switch provides a warning that the cooling system operation and performance is compromised before the top-oil temperatures exceed its limits.

Pumps can also be monitored through flow switches or flow meters. In addition, failure of pump bearings can result in the generation of metallic particles which, in turn, will compromise the dielectric integrity of the insulation system. Sensors that detect bearing wear are available. The ultrasonic sensors are embedded in the pump bearings and measure the bearing length, thus determining whether metal loss is occurring.

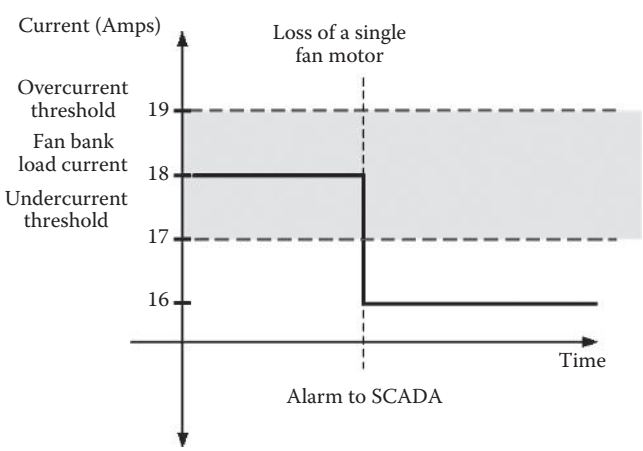

FIGURE 24.2 Motor operating current limits.

www.EngineeringEbooksPdf.com

24.4 Bushing Applications

While LTCs represent the largest source of transformer failures, bushing failures represent a greater risk and cost in terms of damage and personal injury in the vicinity of the transformer. These failures are caused by dielectric breakdown of the insulation materials. While off-line testing of bushing power factor has been performed for a considerable time, the high probability of an incipient bushing failure makes it an ideal candidate for on-line monitoring.

24.4.1 Failure Mechanisms Associated with Bushings

The five most common mechanisms that lead to bushing failures are inadvertent moisture ingress, defects in the porcelain or polymer insulator, inner insulator contamination, PD, and high operating temperatures. Moisture can enter the bushing through deterioration of gasket material or cracks in terminal connections. While defects of the physical insulator are rare, it does happen, and this too can be a point of entry for contaminants into the condenser or oil. Contamination can also reside inside on the insulator walls. If this contamination were conductive, complete dielectric breakdown will occur. However, in most cases, when this contamination occurs, it is semiconductive and will degrade over a short time until failure occurs. Another possible cause of bushing failure is due to steep wave fronts caused by switching operations in conjunction with GIS.

Any of these potential failure modes will increase the dielectric loss and change the insulation dissipation factor. The first indication of this type of problem is an initial increase in power factor. As the deterioration progresses, increases in capacitance will be observed.

24.4.2 On-Line Bushing Power-Factor and Capacitance Measurements

There are two methods currently employed for on-line testing of bushings. The first is the sum of current method. The second is a relative measurement method that relies on monitoring two or more bushings connected on the same phase. Both methods interface with the capacitor tap of the bushing through a coupling device. This device can either be resistive or capacitive. In all cases, these devices utilize varistors to limit the effect of surges.

24.4.2.1 Sum of Current Method

This method depends on the voltage of all bushings monitored being balanced and that the vector sum of bushing insulation current is zero. However, any imbalance voltage must be considered when the on-line system analyzes the data. Figure 24.3 illustrates the sum of current method.

In reality, bushings are never identical, and system voltages are never perfectly balanced. As a result, the sum current is a nonzero value and is unique for each set of bushings. The initial sum current can be learned, and the condition of the bushings can be determined by evaluating changes in the sum-current phasor. By using software techniques and an expert system to analyze changes to the sum current, changes in either the capacitance or power factor of any of the bushings being monitored can be detected, as shown in Figure 24.4.

Figure 24.4a depicts a change that is purely resistive, that is, only the in-phase component of current is changing. It is due to a change in C_1 insulation power factor, and it results in the current phasor change $\Delta I'_A$ from ΔI^0_A to $\Delta I'_A$. The change in current is in phase with A-phase line voltage, V_A, and it is equal to $\Delta I'_\Sigma$. This is then evidence of a power factor increase for the A-phase bushing.

Figure 24.4b depicts a change that is purely capacitive, that is, only a quadrature component of current is changing. In this case, the change is due to a change in C_1 insulation capacitance, and it results in the current phasor change $\Delta I''_A$ from ΔI^0_A to $\Delta I''_A$. The change in current leads the voltage V_A by 90°, and it is equal to $\Delta I''_\Sigma$.

www.EngineeringEbooksPdf.com

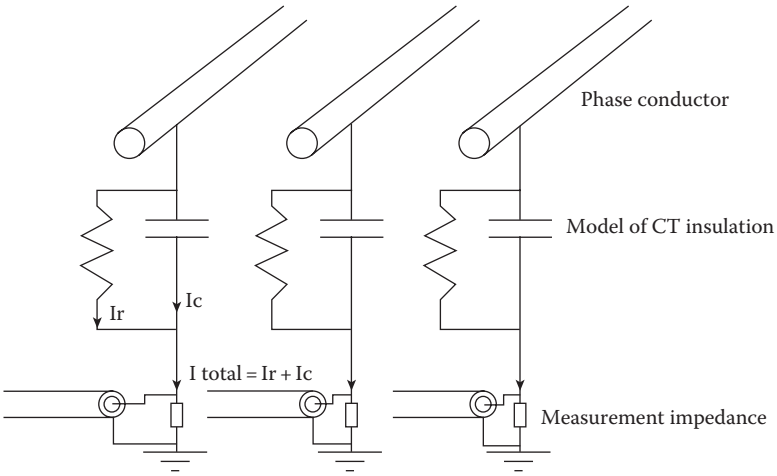

FIGURE 24.3 Bushing sum-current measurements.

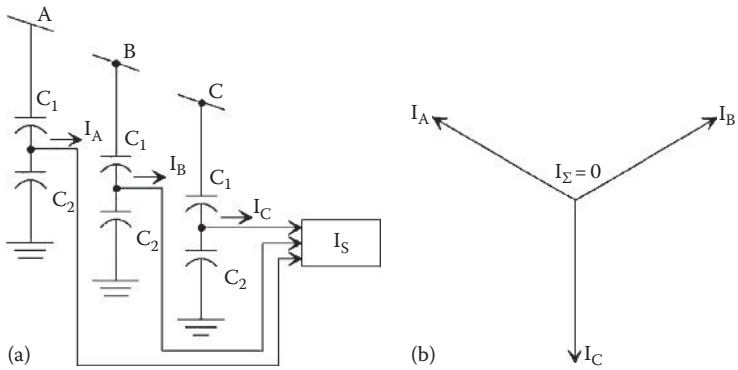

FIGURE 24.4 Analysis of bushing sum currents: (a) change in current phasor due to change in power factor of bushing A and (b) change in current phasor due to change in capacitance of bushing A.

Expert systems are also used to determine whether the sum-current change is related to actual bushing deterioration or changes in environmental conditions such as fluctuations in system voltages, changes in bushing or ambient temperature, and changes in surface conditions (Lachman, 1999).

24.4.2.2 Relative Measurement Method

The relative measurement method uses two or more bushings on the same phase. Since these phases are at the same potential, this method is immune to variations in voltage. This method calculates the ratio of amplitudes and tangent of the phase angle between the bushing insulation currents (Picher and Rajotte, 2007). The relative tan δ is compared with a reference voltage from another bushing in service. Changes against the reference are an indication of a problem with the bushing being observed.

24.5 Load Tap Changer Applications

Many failures can be attributed directly to problems with LTCs. Problems include misalignment of contacts, poor design of the contacts, high loads, excessive number of tap changes, mechanical failures, and coking caused by contact heating in the presence of carbon particles circulating within the tap-changer compartment. LTC failures account for approximately 41% of substation transformer failures (Bengtsson, 1996; CIGRE, 1983).

www.EngineeringEbooksPdf.com

LTC contacts normally wear as the LTC operates to maintain the desired voltage at varying loads. The rate of wear can be accelerated through faulty installation and heavy loading. If excessive wear goes undetected, the contacts can burn open or weld together. These problems can be mitigated through monitoring a number of factors according to the specific LTC design.

LTC failures are either mechanical or electrical in nature. Mechanical faults include failures of springs, bearings, shafts, and drive mechanisms. Electrical faults can be attributed to coking of contacts, burning of transition resistors, and insulation problems (Bengtsson, 1996). This section discusses the various parameters that can be monitored on-line that will give an indication of tap-changer condition.

24.5.1 Mechanical Monitoring and Analysis of Load Tap Changers

A variety of diagnostic algorithms for on-load tap changers (OLTCs) are available. These include drive-motor torque, motor-current information, operating time of the tap-changer mechanism, or vibro-acoustic analysis. Mechanical and control problems can be detected because additional friction, contact binding, extended time for tap-changer position transition, and other anomalies significantly impact torque and current. It is noted that some tap-changer mechanisms are not driven directly from a motor. For these applications, drive-motor torque and motor-current information are only reliable operating indications of the device used to store energy, in a spring or other mechanical device, to act to physically move the mechanism.

24.5.1.1 Initial Peak Torque or Current

Inrush current and starting torque are a function of the amount of friction encountered and proper alignment of linkages on mechanisms that are directly motor driven. Monitoring this peak value during the first 50 ms of the event provides a useful diagnostic. Increasing values over time are cause for concern.

24.5.1.2 Average Torque or Motor Current

Monitoring the average running motor current or torque allows detection of friction and binding in directly driven mechanisms. Several common tap-changer designs employ a motor to charge a spring. It is the spring that supplies energy to move the linkages during a tap change. In this case, motor-current measurement is not very effective at detecting mechanical trouble. However, a reduction in average motor current and torque is indicative that the spring may not be able to store enough energy and hence may result in slower operating times. Torque or force sensors are used to measure drive force and small doughnut or split core CTs to measure motor current.

A monitoring system is available that determines the torque curve by measuring the active power of the motor. Anomalies in the torque curve are detected by using an expert system that performs a separate assessment of the individual functions of a switching operation (Leibfried et al., 1998). Figure 24.5 is a sample torque curve for a resistance-type tap changer.

24.5.1.3 Contact-Wear Monitoring

Monitoring systems are available in which an expert system is used to calculate the total wear on the tap-changer switch contacts. The system issues a recommendation concerning when the contacts should be replaced. The model used by the expert system is based on tap-changer switch-life tests and field experience.

24.5.1.4 Tap-Changer Mechanism Operating Time

The time from initiating a raise or lower command until the time a tap changer completes a tap-changer position transition can be monitored. Once this information is available, the time can be compared against a base-line tap-changer position transition time. Should the mechanism exceed this time, then it is likely that there is a problem with the mechanism, the motor drive, or contacts that are slowing or stopping the mechanism.

www.EngineeringEbooksPdf.com

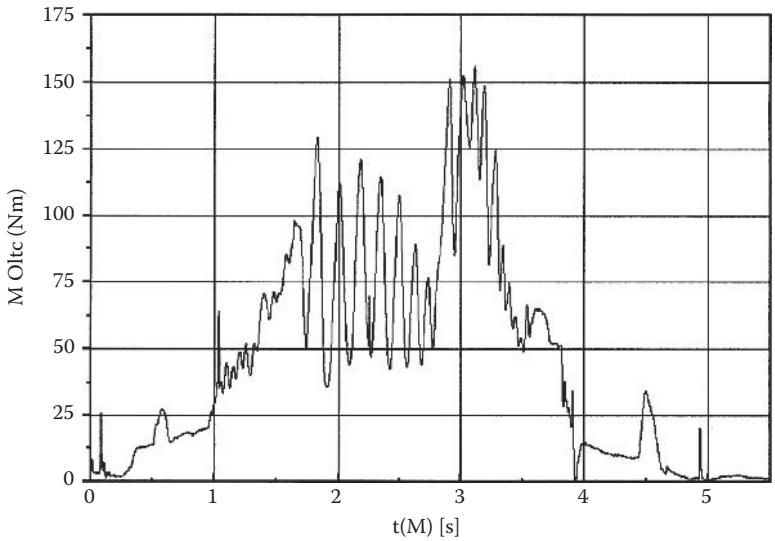

FIGURE 24.5 Sample torque curve.

24.5.1.5 Position Determination

Monitoring systems are available that determine the exact position of the fine tap selector during a switching operation. The system uses this information to correlate tap position with the motor torque. In this manner, the position of the tap changer after a completed switching operation is determined, and the end position of the tap-changer range of operation is monitored.

In addition, the user can correlate tap-changer operating time with tap position (Hoffman et al., 2008). This is an alternative to monitoring motor torque especially where the mechanism is not directly driven by a motor.

24.5.1.6 Vibro-Acoustic Monitoring

The vibrations caused by various mechanical movements during a tap-changing operation can be recorded and analyzed for signs of deterioration. This provides continuous monitoring of the transition time as well as an indication of contact wear and detection of sudden mechanical-rupture faults (Bengtsson et al., 1998).

Acoustic monitoring of OLTCs has been under development. The LTC operation can be analyzed by recording the acoustic signature and comparing it with the running average representative of recent operations. The signal is analyzed in distinct frequency bands, which facilitates the distinction between problems with electrical causes and those with mechanical causes.

Every operation of the tap changer produces a characteristic acoustic wave, which propagates through the oil and structure of the transformer. Field measurements show that in the case of a properly functioning tap changer, this vibration pattern proves to be very repeatable over time for a given operation.

The acoustic signal is split into two frequency bands. Experience has shown that electrical problems (arcing when there should not be any, notably as for the case of a vacuum-switch-assist LTC) are detected in a higher frequency band than those mechanical in nature (excessive wear or ruptured springs).

24.5.2 Thermal Monitoring of Load Tap Changers

A variety of diagnostic algorithms for OLTCs can be implemented using temperature data. The heat-transfer pattern resulting from energy losses results in a temperature profile that is easily measured with an in-tank or external temperature sensors. Temperature profiles are normally influenced by weather

www.EngineeringEbooksPdf.com

conditions, cooling-bank status, and electrical load. However, abnormal sources of energy (losses) also impact the temperature profile, thus providing a method of detection. The following four electrical/thermal parameters can be monitored on-line.

24.5.2.1 Temperature

The simplest temperature-related diagnostic involves monitoring the temperature level. LTC temperature in excess of a certain level may be an indication of equipment trouble. However, there are also many factors that normally influence temperature level. One LTC-monitoring system measures the temperature of the diverter-switch oil and the main-tank oil temperature as a way to estimate the overload capacity of the tap changer.

24.5.2.2 Simple Differential Temperature

Another simple algorithm involves monitoring the temperature difference between the main tank and LTC compartments for those tap-changer designs in which the tap changer is in a compartment separate from the main tank or for in-tank designs where there is a thermometer well or surface where the internal tank oil can be monitored. Under normal operating conditions, the main-tank temperature is higher than the tap-changer compartment temperature. This result is expected, given the energy losses in the main tank and general flow of thermal energy from that point to other regions of the equipment. For larger tap compartments, it may be necessary to measure the temperature at two locations. Mounting temperature sensors on opposite sides of the tank normally results in detection of a problem on larger LTC compartments.

Many factors influence differential temperature. Excessive losses caused by bad contacts in the tap changer are detectable. However, LTC temperature can exceed main-tank temperature periodically under normal conditions. Short-term (hourly) variations in electrical load, weather conditions, and cooling-bank activation can result in main-tank temperatures below the tap changer. Reliable diagnostic algorithms must account for these normal variations in some way. Figure 24.6 is a graphical representation of the top-oil temperature in the main tank and of the LTC difference temperature between the main tank and LTC compartment. One such method is to use an activation timer that

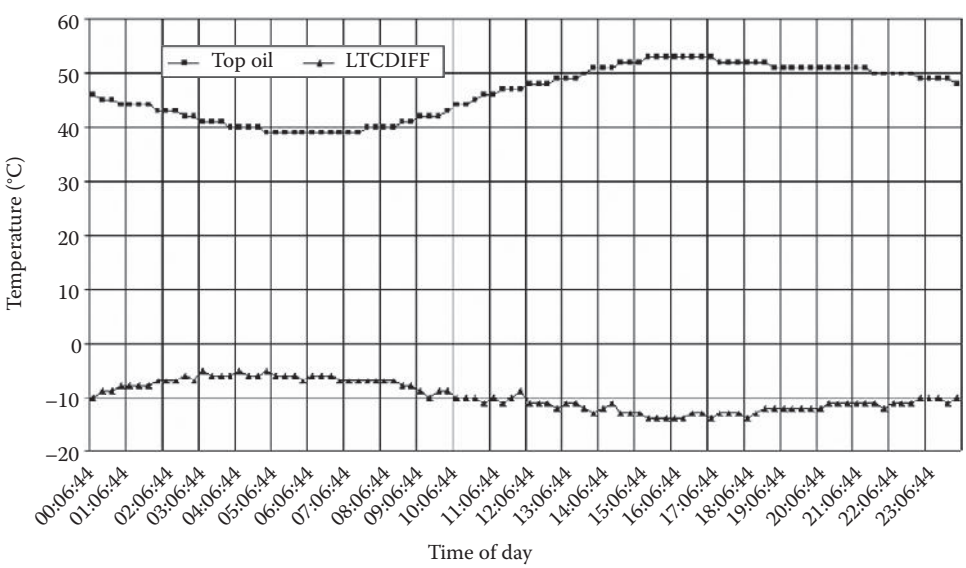

FIGURE 24.6 Sample differential-temperature measurement. The top trace is the main-tank top-oil temperature, and the bottom trace is the LTC compartment temperature.

www.EngineeringEbooksPdf.com

accounts for the aforementioned factors to allow the two tanks to attempt to come back into equilibrium. If they do, the relative difference between the main tank and the LTC compartment will return to normal levels. If not, the alarm from the algorithm is a good predictor of a heating event within the LTC compartment.

24.5.2.3 Differential Temperature with Trending

Trending is one method used to distinguish between normal and abnormal differential temperature. When the LTC temperature exceeds the main-tank temperature, the temperature trends are examined. If the tap-changer temperature is decreasing, this is deemed a normal condition. However, if the tap-changer temperature exceeds the main-tank temperature and is increasing, an equipment problem may be indicated. Since weather conditions, loading, and cooling-bank activation play a role in observed temperature changes within the main tank and LTC compartment, alarm activation on trending must take into account sudden changes due to external affects.

24.5.2.4 Temperature Index

Another method used to examine temperature differential involves computing the area between the two temperature curves over a rolling window of time (usually 1 week). This quantity is called the temperature index and is usually expressed in units of degree-hours. Normal temperature difference (main tank above tap changer) is counted as "negative" area, and the reverse is "positive" area. Therefore, over a period of 7 days, the index reflects the general relationship between the two measurements without changing significantly due to normal daily variations in temperature. Under abnormal conditions, the index will exhibit an increasing trend as the LTC tends to run hotter relative to the main tank. It is noted that this method responds slowly to abnormal conditions. A change in tap-changer temperature characteristics that takes place over the course of several hours will require several days to be reflected in the index assuming this is not weather related.

24.5.3 Dissolved-Gas Analysis

Analysis of gases dissolved in the oil in the LTC compartment provides information as to the nature of an evolving problem within the LTC compartment. Key gases for this analysis include ethane, methane, acetylene, and ethylene. Large concentrations of ethane and methane are produced through extreme heating of metal connections including straps and contacts. Acetylene and ethylene are indicators that arcing is occurring within the LTC compartment. Since some LTCs produce combustible gases in some quantity, the ratio of these gases has shown usefulness in analyzing whether the gas concentrations are normal or abnormal (IEEE WG C57.139).

24.6 Instrument Transformer Applications

The techniques available to monitor instrument transformers on-line can be focused on fewer possible degradation mechanisms than those for monitoring power transformers. However, the mechanisms by which instrument transformers fail are among the most difficult to detect on-line as it is difficult to physically apply in practice.

24.6.1 Failure Mechanisms Associated with Instrument Transformers

The failure rates of instrument transformers are generally low. Failures of porcelain-housed instrument transformers are often catastrophic, leaving little evidence to determine the cause of the fault. The following mechanisms have been observed and identified as probable causes of failure.

www.EngineeringEbooksPdf.com

24.6.1.1 Moisture Ingress

Moisture ingress is often identified as a cause of failure. Moisture ingress can occur through loss of integrity of the seal or gasketing. Once moisture enters, it permeates into the oil and oil/paper insulation. As with bushings that contain a condenser core, moisture degrades the dielectric integrity of the insulating materials and increases the losses in the insulating materials. This leads to failure if not caught in time. The increase in the dielectric losses will be detected as a change in the power factor of the insulation and increased moisture levels indicated through oil testing.

24.6.1.2 Partial Discharge

The insulation of instrument transformers may have voids within. These voids will be subject to PD and increase in size if subjected to a high electric fields. These discharges could generate unwanted chemical by-products causing an increase in the energy of the discharge within the void. Eventually, this will degrade individual insulation layers, resulting in the short circuiting of the grading insulation layers. Such a developing fault can be detected in two ways: One is through detection of a change in the capacitance of the device (through the shorting of one stress grading layer), which may reflect as a change in dissipation factor or tan δ. The second will manifest as an increase in the PD levels (in picocoulomb) associated with insulation failure.

24.6.1.3 Overvoltages

Overvoltages produced by lightning surges are also a failure mechanism, particularly where thunderstorms occurred in the vicinity of the failure. In addition, steep wave fronts in substations during disconnect switch operations especially associated with gas insulated switchgear increase the possibility of damage to the insulation of instrument transformers. Switching overvoltages are an additional source of overstressing that may lead to insulation failure.

24.6.1.4 Through-Faults

In order to prevent failures due to the mechanisms outlined earlier, experience seems to indicate that slower-forming faults are probably detectable and preventable, while fast-forming faults notably as due to damage caused by lightning strikes will be difficult to detect quickly enough to prevent consequential failure of the transformer.

Another possible mechanism may relate to mechanical damage to the insulation after a CT has been subjected to fault current through its primary winding. After current transformer failures, it is often observed in retrospect that 1–2 weeks prior to the failure, the CT had been subjected to a through-fault. Again, it is difficult to state that damage is caused to the CT under these conditions, and additional information would be required before this mechanism can be considered a probable cause of failure.

24.6.2 Instrument Transformer On-Line Monitoring Methods

If the instrument transformer has a capacitance tap installed, on-line measurement of relative tan δ and relative capacitance is a candidate to find potentially bad devices. On-line PD measurement and analysis may also provide additional information as to the condition of the insulation within the instrument transformer. As with PD for power transformers, ambient electrical noise requires mitigation. Future developments may include on-line DGAs specially designed for this application. On-line DGA in conjunction with PD detection will permit a more confidant determination of degradation of oil/paper insulation in instrument transformers.

24.6.2.1 Relative Tan Delta and Relative Capacitance Measurements

Off-line PD and tan δ monitoring are well-established techniques for determining degradation of insulation. This can be augmented through sampling the oil from the instrument transformer for DGA. Off-line tan δ and capacitance measurements require a low-loss capacitors at the voltage rating of the

www.EngineeringEbooksPdf.com

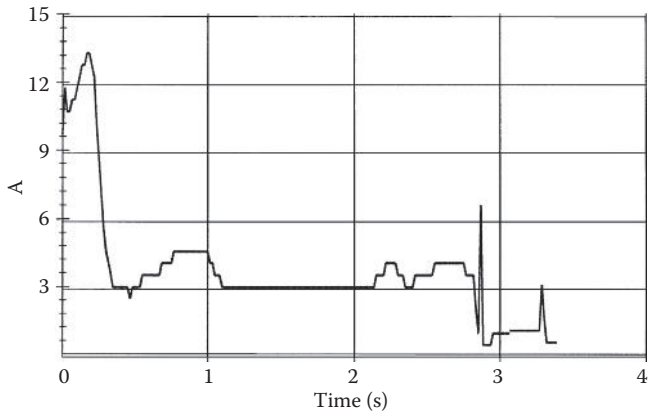

FIGURE 24.7 Schematic representation of relative tan δ measurements.

equipment under test. The preferred method is to use a Schering Bridge to determine the capacitance and the tan δ of the insulation. This is not practical or possible for on-line measurements.

On-line tan δ or capacitance measurements can be made by measuring the ground current from each of the three single-phase instrument transformers. This is done by isolating the base of the instrument transformer except at one connection point, which then forms the only current path to ground. This current is then measured by a suitable sensor. The measured current comprises two components: a capacitive component (typically 0.5–1 ηF) and a resistive component that is a function of the insulation dissipation factor or tan δ of the insulation contained in the device. The vector sum of the three phase currents to earth will be approximately equal to zero for the three instrument transformers in a similar condition and design. A resistive component of current to earth will cause slight phase and magnitude shift in these currents. If all three units on each phase have a low tan δ, then any change in one device with respect to the other two will be detected. A change in measured capacitance to earth will be indicated as the insulation deteriorates or grading layer becomes shorted. This technique is also referred to as relative tan δ when measurements are made with respect to other similar instrument transformers. Figure 24.7 illustrates the connection arrangement.

24.6.2.2 On-Line Gas Analysis

The fuel-cell sensor-membrane technology that has been applied widely to power transformers with circulating oil can be applied to instrument transformers. However, in instrument transformers, the oil is confined, and this confinement can affect sensor operation. Installation can require factory modifications, depending on the type of sensor that is installed (Boisseau and Tantin, 1993). Typically, the hydrogen sensor is located in an area where the oil is stagnant, especially during periods of low ambient temperatures. This arrangement results in poor accuracy for low hydrogen-concentration levels. For significant hydrogen concentrations (above 300 ppm) in stagnant oil, the accuracy has been determined to be acceptable (Cummings et al., 1988). These constraints may not apply to the TCD technology. In this case, the sensor is located externally to the apparatus and utilizes active oil circulation through the monitor while also providing continuous moisture-level monitoring.

24.6.2.3 On-Line Partial Discharge Measurements

On-line PD measurement techniques that were discussed in the section on power transformers (Section 24.3.1) are also applicable to instrument transformers.

24.6.2.4 Pressure

PD activity inside the tank forms unwanted gases. Gas build-up increases the pressure after the gases have saturated the oil. A threshold-pressure switch can be used to perform this measurement.

www.EngineeringEbooksPdf.com

The installation of an inflatable bellows that is placed between the expansion device and the enclosure typically requires factory modification. In some applications, pressure sensors take a considerable amount of time (on the order of months) to detect any significant pressure change. The sensitivity of this type of measurement is less than that of hydrogen and PD sensors (Boisseau and Tantin, 1993). Pressure sensors are also available that mount on the drain valve (Cummings et al., 1988). A fiber-optic sensor used for gas detection has been deployed (Matthiessen and Ellis, 1994). This method relies on a float in a gas accumulation chamber, an optical fiber connected to a light-emitting diode and a second optical fiber coupled to a light-detecting diode. The optical path is broken as long as the float is in its normal position. However, when the gas accumulation chamber fills with gas, the float rises and allows light to travel through the oil signaling increase in gas pressure and hence a problem.

References

Bengtsson, C., Status and trends in transformer monitoring, *IEEE Trans. Power Del.*, 11, 1379–1384, 1996.

Bengtsson, T., Kols, H., Foata, M., and Leonard, F., Monitoring tap changer operations, paper 12.209, presented at *CIGRE International Conference on Large High Voltage Electric Systems*, CIGRE, Paris, France, 1998.

Bengtsson, T., Kols, H., and Jönsson, B., Transformer PD diagnosis using acoustic emission technique, in *Proceedings of the 10th ISH*, Montréal, Quebec, Canada, 1997.

Bengtsson, T., Leijon, M., and Ming, L., Acoustic frequencies emitted by partial discharges in oil, Paper no. 63.10, in *Proceedings of the Seventh ISH*, Dresden, Germany, 1993.

Birlasekaran, S. and Leong, W.H., Comparison of known PD signals with the developed and commercial HFCT sensors, *IEEE Trans. Power Del.*, 3, 1581–1590, 2007.

Boisseau, C. and Tantin, P., Evaluation of monitoring methods applied to instrument transformers, presented at *Doble Conference*, 1993.

Chu, D., El Badaly, H., and Slemon, C., Development of an automated transformer oil monitor, presented at *EPRI Second Conference on Substation Diagnostics*, 1993.

Chu, D., El Badaly, H., and Slemon, C., Status report on the automated transformer oil monitor, *EPRI Third Conference on Substation Diagnostics*, 1994.

Cummings, H.B. et al., Continuous, on-line monitoring of freestanding, oil-filled current transformers to predict an imminent failure, *IEEE Trans. Power Del.*, 3, 1776–1783, 1988.

Domun, M.K., Condition monitoring of power transformers by oil analysis techniques, presented at *Science, Education and Technology Division Colloquium on Condition Monitoring and Remanent Life Assessment in Power Transformers*, IEE Colloquium (digest), No. 075, IEE, London, U.K., March 22, 1994.

Eleftherion, P., Partial discharge XXI: Acoustic emission-based PD source location in transformers, *IEEE Electr. Insul. Mag.*, 11, 22, 1995.

Glodjo, A., A field experience with multi-gas on-line monitors, in *1998 Proceedings of the 65th Annual International Conference of Doble Clients*, 1998.

Griffin, P., Continuous condition assessment and rating of transformers, in *1999 Proceedings of the 66th Annual International Conference of Doble Clients*, Boston, MA, 1999, pp. 8–8.1.

Gross, D.W. and Soller, M., Partial discharge diagnosis on large power transformers, *IEEE International Symposium on Electrical Insulation*, Aachen, Germany, 2004, pp. 186–191.

Harrold, R.T., Acoustic waveguides for sensing and locating electric discharges within high voltage power transformers and other apparatus, *IEEE Trans. Power App. Syst.*, 102, 1983, pp. 449–457.

Hoffman, G.R. et al., Apparatus and method for monitoring tap positions of load tap changer, U.S. patent 7417411, 2008.

IEEE, *Dissolved Gas Analysis of Load Tap Changers*, IEEE WG C57.139, Institute of Electrical and Electronics Engineers, Piscataway, NJ, 2008.

IEEE, *Guide for the Interpretation of Gases Generated in Oil-Immersed Transformers*, IEEE Std. C57.104, Institute of Electrical and Electronics Engineers, Piscataway, NJ, 2008.

www.EngineeringEbooksPdf.com

IEEE, *Guide for Loading Mineral-Oil-Immersed Transformers*, IEEE Std. C57.91-1995, Institute of Electrical and Electronics Engineers, Piscataway, NJ, 1995.

Leibfried, T., Knorr, W., Viereck, D., Dohnal, D., Kosmata, A., Sundermann, U., and Breitenbauch, B., On-line monitoring of power transformers—Trends, new developments, and first experiences, paper 12.211, presented at *CIGRE International Conference on Large High Voltage Electric Systems*, Paris, France, 1998.

Lemke, E., A new procedure for partial discharge measurements on the basis of an electromagnetic sensor, paper 41.02, in *Proceedings of the Fifth ISH*, Braunschweig, Germany, 1987.

Matthiesen, P. and Ellis, K., Field experience with an on-line gas monitoring device for oil filled instrument transformers, *IEEE Trans. Power Del.*, 9(3), 1476, July 1994.

Morshuis, P.H.F., Partial discharge mechanisms in voids related to dielectric degradation, *IEE Proc. Sci. Meas. Technol.*, 142, 62, 1995.

Myers, S.D., Kelly, J.J., and Parrish, R.H., *A Guide to Transformer Maintenance*, Transformer Maintenance Institute, Akron, OH, 1981.

Oommen, T.V., On-line moisture sensing in transformers, in *Proceedings of the 20th Electrical/Electronics Insulation Conference*, Boston, MA, 1991, pp. 236–241.

Oommen, T.V., On-line moisture monitoring in transformers and oil processing systems, paper 110-03, presented at *CIGRE Diagnostics and Maintenance Techniques Symposium*, Berlin, Germany, 1993.

Picher, P. and Rajotte, C., Field experience with on-line bushing diagnostic to improve transformer reliability, *CIGRE SC A2 and D1 Joint Colloquium on Power Transformers*, Bruges, Belgium, October 7–12, 2007, pp. 1–8.

Susa, D. and Lehtonen, M., Dynamic thermal modeling of power transformers: Further development—Part I, *IEEE Trans. Power Del.*, 21(4), 2006.

Susa, D. and Lehtonen, M., Dynamic thermal modeling of power transformers: Further Development—Part II, *IEEE Trans. Power Del.*, 21(4), 2006.

Wang, C., Dong, X., Wang, Z., Jing, W., Jin, X., and Cheng, T.C., On-line partial discharge monitoring system for power transformers, in *Proceedings of the Tenth ISH*, Montréal, Quebec, Canada, 1997, p. 379.

Wenzel, D., Borsi, H., and Glockenbach, E., Pulse shaped noise reduction and partial discharge localisation on transformers using the Karhunen-Loéve-Transform, paper 5627, in *Proceedings of the Ninth ISH*, Graz, Austria, 1995.

www.EngineeringEbooksPdf.com

www.EngineeringEbooksPdf.com

25

U.S. Power Transformer Equipment Standards and Processes

25.1 Introduction **25**-1
25.2 Major Standards Organizations **25**-2
25.3 Processes for Acceptance of American National Standards **25**-2
Canvass List • Accredited Standards Committee Deactivated December 31, 2002, by Actions of IEEE, NEMA, and C57 • Accredited Standards Organization in Use by IEEE Starting January 1, 2003
25.4 International Electrotechnical Commission **25**-5
25.5 Relevant Power Transformer Standards Documents **25**-7
Small Dry-Type Transformers • Electronics Power Transformers • Low-Voltage Medium-Power Dry-Type Transformers • Medium- and High-Voltage Liquid-Filled and Dry-Type Transformers
Acknowledgments **25**-20

Philip J. Hopkinson
HVOLT, Inc.

This chapter is devoted to a description of the power transformer equipment standards approval processes and a listing of the standards that are in place in the United States in 2011. The section on accredited standards approval processes provides an abbreviated description of the methods that are employed in the United States for gaining American National Standards Institute (ANSI) approval and recognition. Similarly, an approval process is also shown for International Electrotechnical Commission (IEC) documents. Many thanks are offered by the author for the assistance that has been rendered by representatives of the National Electrical Manufacturer's Association (NEMA), by ANSI, and by individuals from IEEE, IEC, EEI, EL & P.

25.1 Introduction

The United States uses a voluntary process for the development of nationally recognized power transformer equipment standards. This chapter describes the U.S. standards accreditation process and provides flow charts to show how accredited standards are approved. With the International Electrotechnical Committee (IEC) taking on increased importance, the interaction of the U.S. technical experts with IEC is also described. Finally, relevant power transformer documents are listed for the key power transformer equipment standards that guide the U.S. industry.

www.EngineeringEbooksPdf.com

25.2 Major Standards Organizations

ANSI	American National Standards Institute
ASC C57	Accredited Standards Committee "C57" for Power and Distribution Transformers Deactivated December 31, 2002, by Decisions of IEEE, NEMA, and C57
IEEE	Institute of Electrical and Electronics Engineers
NEMA	National Electrical Manufacturer's Association
EL & P	Electric Light and Power Delegation
EEI	Edison Electric Institute
AEIC	Association of Edison Illuminating Companies
UL	Underwriter's Laboratory
IEC	International Electrotechnical Commission

25.3 Processes for Acceptance of American National Standards

The acceptance of a standard as an American National Standard (ANS) requires that it be processed through one of three methods: by canvass list, accredited standards committee (ASC), or accredited standards organization action. All three methods share the common requirement that the process used has been accredited by the American National Standards Institute (ANSI) that the methodology incorporates due process and that consensus among interests is achieved. Inherent in that approval is presentation of accepted operational procedures and/or a balloting group that is balanced among users, manufacturers, and general interest groups. Other considerations include (1) that the document is within the scope previously registered, (2) identified conflicts are resolved, and (3) that known national standards were examined to avoid duplication or conflict, any appeal has been completed, and the ANSI patent policy is met.

While the three processes differ in their methods of gaining consensus, all three use common methods for document submittal to ANSI.

An explanation of the ANS submittal process is available at http://web.ansi.org/rooms/room_16/public/ans.html. Here is a brief explanation of Board for Standard Revision 8 (BSR-8) and Board for Standard Review 9 (BSR-9) forms:

BSR-8 (request to initiate public review) is the form used to submit draft candidate ANS for announcement for public review in ANSI's Standards Action. This form may be submitted multiple times for the same standard if multiple public reviews are required due to substantive changes in text. It is recommended that the form indicate as much if a BSR-8 is being submitted and it is NOT a first public review. This form is available via the ANSI reference library or via psa@ansi.org <mailto:psa@ansi.org>. BSR-9 (request for formal approval of a standard as an ANS) is the form used to submit candidate ANS for final approval. All of the information requested on the form must be provided; the form itself serves as a checklist for the evidence of consensus that the BSR and the ANSI procedures require. The certification section on the form is the developer's acknowledgment that all items listed as part of the certification statement are true, for example, all appeals have concluded. This form is available via the ANSI reference library or via psa@ansi.org <mailto:psa@ansi.org>.

An explanation of the accreditation process (accreditation of ANS Developers) is available at http://web.ansi.org/rooms/room_16/public/accredit.html.

25.3.1 Canvass List

The canvass list method provides procedures for seeking approval/acceptance of a document without the structure of a committee or an organization. Under the canvass list, the originator of a standard seeking its acceptance as an ANS must assemble, to the extent possible, those who are directly and materially affected by the activity in question. The standards developer conducts a letter ballot or

www.EngineeringEbooksPdf.com

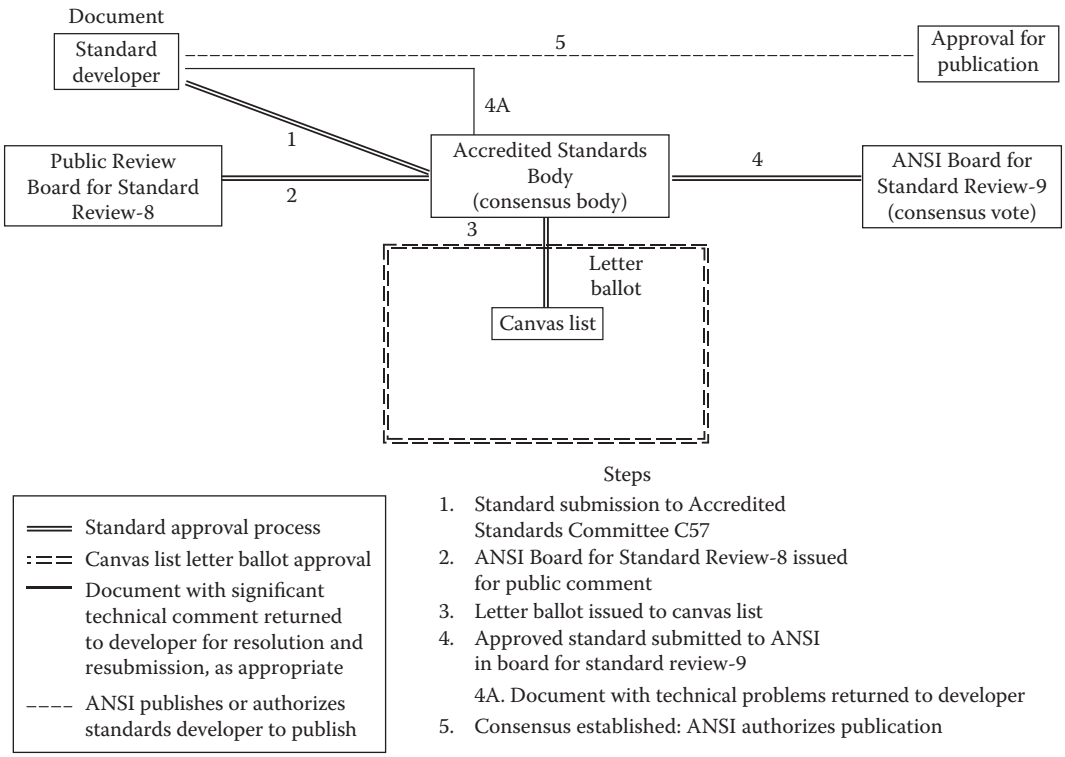

FIGURE 25.1 ANSI standards canvass list approval process.

"canvass" of those interested to determine consensus on a document. Additional interest in participating on a canvass is sought through an announcement in ANSI's publication titled "Standards Action." Although canvass developers provide ANSI with internal procedures used in the development of the draft ANS, the due process used to determine consensus begins after the draft standard has been developed. Standards developers using the canvass method must use the procedures provided in Annex B of the ANSI Procedures.

The balloting group, by the methods mentioned earlier, consists of a balance of interests and affected parties. To summarize, once the canvass list is approved and finalized, the document is circulated for voting. Simultaneously, the manager of the canvass list completes and submits the BSR-8 form for public notification of the undertaking and providing opportunity for comment from persons outside the balloted group. Once the balloting period ends, a minimum of 45 days and usually after 60 days for transformers, the manager completes BSR-9 to provide validation that in the balloting, the proposal received consensus approval and a report on how each of the participants voted. The BSR-9 is forwarded to ANSI for the Board of Standard Review action. Of particular concern is that the document review was completed under an open and fair procedure and that a consensus of the voting group approved its acceptance (Figure 25.1).

Underwriter's Laboratories (UL) use the canvass list method to obtain ANSI recognition of UL documents.

25.3.2 Accredited Standards Committee Deactivated December 31, 2002, by Actions of IEEE, NEMA, and C57

The ASC is a second method for gaining "national" acceptance of a standard. The ASCs are standing committees of directly and materially affected interests created for the purpose of developing a document

www.EngineeringEbooksPdf.com

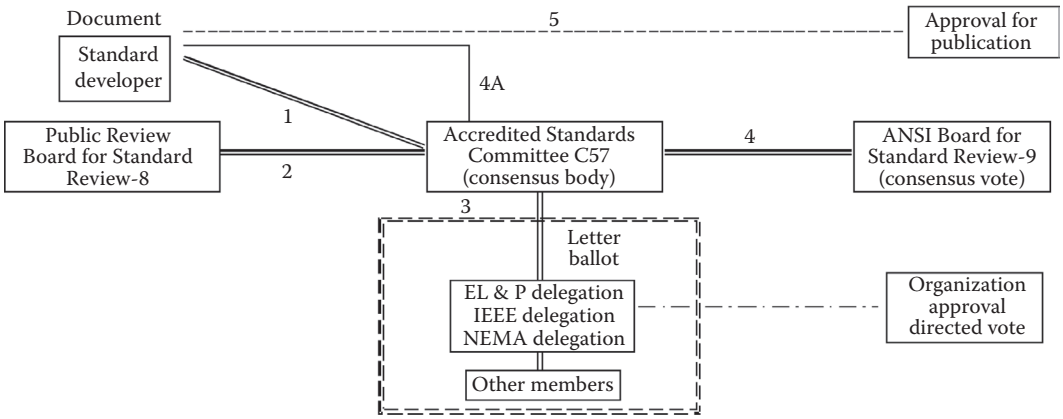

FIGURE 25.2 ANSI Accredited Standards Committee approval process for C57 deactivated December 31, 2002 by actions of IEEE, NEMA, and C57.

and establishing consensus in support of this document for submittal to ANSI. The committee method is most often used when a standard affects a broad range of diverse interests or where multiple associations or societies with similar interests exist. The committee serves as a forum where many different interests, without a common membership in an organization or society, can be represented. ASCs are administered by a secretariat, an organization that takes the responsibility for providing administrative oversight of the committee's activities and ensuring compliance with the pertinent operating procedures.

An ASC may adopt the procedures provided in Annex A of the ANSI Procedures or may develop its own operating procedures consistent with the requirements of 2.2 of these procedures.

Under current procedures, ASCs are entities established through the coalescence of a balance of interest groups focused on a particular product area. The product area and the committee's organization and organizational procedures are approved by ANSI. The ASC charter is subject to periodic review and reaffirmation but, generally, is unobstructed. The ASC has the option to develop and submit standards for acceptance as ANSs or to process documents that fall within their operational scope that originate in other bodies—trade associations, business groups, and the like. Documents submitted to ASCs are subjected to the same procedures for consideration as in the canvass list method. A BSR-8 is issued upon receipt of a document for acceptance and the initiation of committee review and vote. The BSR-8 provides for public notification of the undertaking and for public comment. Once the balloting period is ended, the BSR-9 report is sent to ANSI confirming the voting and the consensus. ANSI reviews the report and provides appropriate approval.

IEEE and NEMA use the ASC to gain ANSI C57 document approvals.

The Electric Light and Power Delegation (EL & P) represents the Edison Electric Institute (EEI) and the Association of Edison Illuminating Companies (AEIC). EL & P, predominantly through EEI, is well represented in the IEEE Transformers Committee. EL & P is not currently a standards development organization but does vote as a delegation on documents that are submitted to ANSI C57 for approval (Figure 25.2).

25.3.3 Accredited Standards Organization in Use by IEEE Starting January 1, 2003

The third method for acceptance is the accredited standards organization. The organization method is often used by associations and societies that have, among other activities, an interest in developing standards.

www.EngineeringEbooksPdf.com

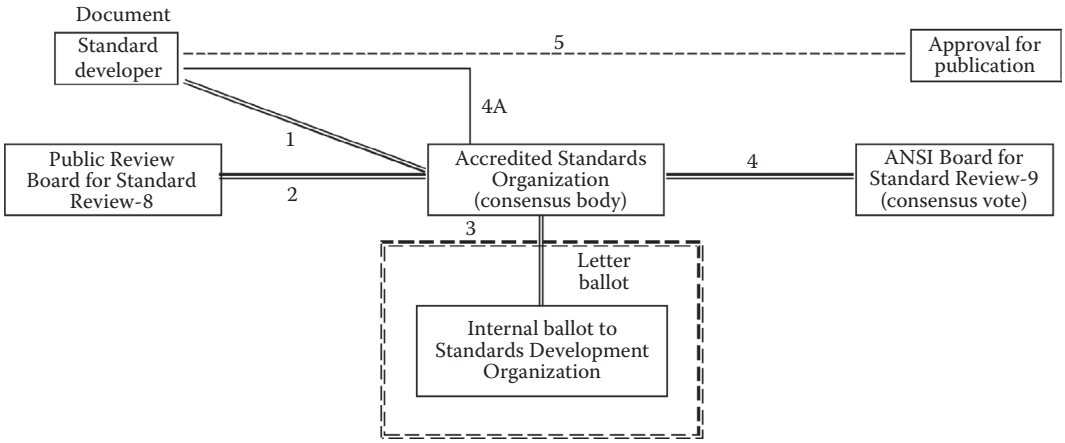

FIGURE 25.3 ANSI Standards Organization approval process. IEEE process as of January 1, 2003.

Although participation on the consensus body is open to all interested parties, members of the consensus body often participate as members in the association or society. The organization method is the only method of consensus development in which the standards developer must develop its own operating procedures. These procedures must meet the general requirements of 2.2 of the ANSI Procedures. By choosing to use this method, flexibility is provided, allowing the standards developer to utilize a system that accommodates its particular structure and practices.

Under these procedures, an organization demonstrates the openness and balance of its voting groups and its operating procedures. The ASO's purview or authority for processing documents for acceptance as an ANS may be restricted to particular products or a group of products, depending upon organizational interests and goals. The documents developed by the ASO and conforming to the interest balance and openness procedures are submitted to ANSI utilizing the BSR-8 and BSR-9 reports, in appropriate sequence. The ANSI BSR evaluates the documentation and makes its decision using the criteria as in the other methodologies.

The developer of a standard is presented with a range of options in pursuing the document's acceptance as an ANS. All methods require prior, or standing, approval until organization scope is changed from ANSI. The canvass method provides the greatest flexibility for the developer but places a greater involvement in assembling the necessary balloting group and, therefore, latitude in determining voting participants. For a developer outside an organization, the canvass list and the ASC provide the greatest and quickest access. The ASO route is not a normal venue for outsiders—or nonmembers—without special arrangements or agreements from the sponsoring ASO, particularly, if the document falls outside the scope of the organization's accreditation (Figure 25.3).

25.4 International Electrotechnical Commission

The IEC is composed of a Central Office and approximately 100 technical committees and subcommittees. The IEC Central Office is located in Geneva, Switzerland. All balloting of technical documents is conducted through the Central Office.

The national committees of each country are responsible for establishing participation status on the various technical committees and subcommittees as well as casting votes on the respective ballots.

www.EngineeringEbooksPdf.com

Participation status by a national committee of a country can be either of three categories:

P-member:	To participate actively in the work, with an obligation to vote on all questions formally submitted for voting within the technical committee or subcommittee, on enquiry drafts and Final Draft International Standards, and whenever possible, to participate in meetings.
O-member:	To follow the work as an observer and therefore to receive committee documents and to have the right to submit comments and to attend meetings.
Non-P-member and non-O-member:	Such a country will have neither the rights nor obligations described earlier for the work of a particular committee. Nevertheless, all national bodies irrespective of their status within a technical committee or subcommittee have the right to vote on enquiry drafts and on Final Draft International Standards. All ballots are cast by the national committees of the respective countries, as one vote per country.

The U.S. National Committee (USNC) is a committee of the ANSI, with headquarters in New York City. U.S. technical interface with IEC TCS/SCS is via a technical advisory group (TAG) and a technical advisor (TA). TAGs are administered by an organizational TAG administrator. TAs are appointed by the USNC Executive Committee (EXCO) to represent the United States' interests on the various technical committees and subcommittees. TA appointments are based on technical experience and capability. TAs are responsible for establishing TAGs to develop consensus positions of technical issues to assist the TA in technical representation. This includes the nomination of working group experts.

As stated earlier, all balloting of technical documents is conducted through the Central Office of the IEC. The ballots are first distributed to the national committees. The national committees next send the

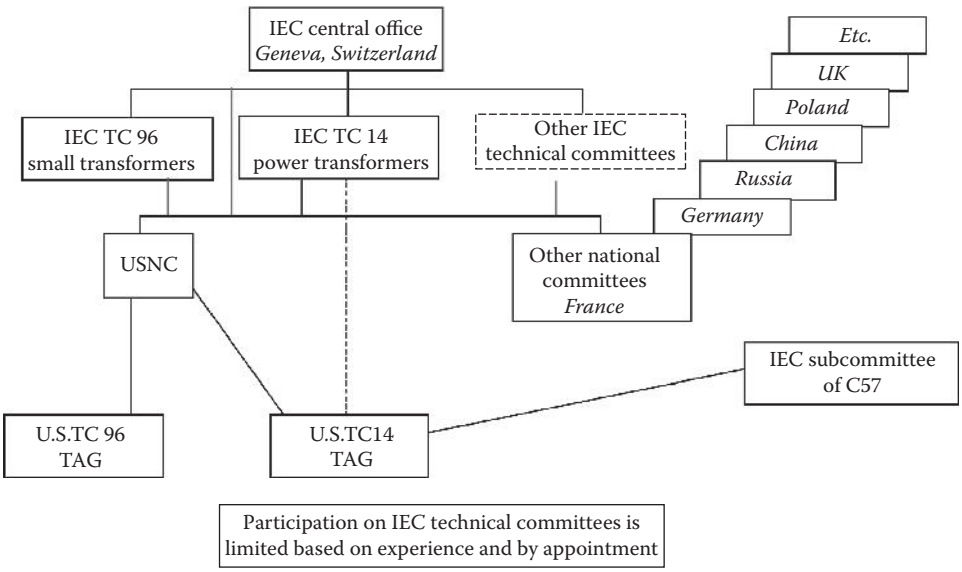

FIGURE 25.4 IEC Technical Committee document approval process.

www.EngineeringEbooksPdf.com

ballots to the appropriate technical experts for input. Within the United States, ballots are submitted to the TA/TAG. The TA/TAG administrator has the responsibility to distribute the ballot to the TAG for direction and/or comment. A consensus process is used to be certain that votes are truly representative of the U.S. position.

The TA/TAG administrator sends all recommended actions to the secretary of the USNC. The secretary then sends the official U.S. vote to the IEC Central Office. Figure 25.4 shows a flow diagram of the IEC ballot process.

25.5 Relevant Power Transformer Standards Documents

There are numerous issued documents that apply to the specifications and performance requirements for the various power transformers in the industry today. This section organizes them in ascending order of power ratings, in the following categories:

1. Small Dry-Type Transformers
   a. NEMA
   b. UL
   c. IEC
2. Electronics Power Transformers
   a. IEEE
3. Low-Voltage Medium-Power Dry-Type Transformers
   a. NEMA
   b. UL
   c. IEC
4. Medium- and High-Voltage Liquid-Filled and Dry-Type Transformers
   a. ASC C57/IEEE C57
   b. NEMA
   c. UL
   d. IEC

25.5.1 Small Dry-Type Transformers

25.5.1.1 NEMA ST-1 "Specialty Transformers (except General-Purpose Type)"

Scope

This standards publication covers control transformers, industrial control transformers, Class 2 transformers, signaling transformers, ignition transformers, and luminous-tube transformers. The publication contains service conditions, tests, classifications, performance characteristics, and construction data for the transformers.

Class 2 Transformers: These transformers are dry-type, step-down, insulating specialty transformers suitable for use in National Electrical Code Class 2 circuits. They are generally used in remote-control, low-energy power, and signal circuits for the operation of bells, chimes, furnace controls, valves, relays, solenoids, and the like. Their secondary voltage is limited to 30 V.

kVA Range: 0–5 kVA Single Phase

Voltage

Control Transformers through 4800 V

Ignition and Luminous-Tube Transformers through 15,000 V

www.EngineeringEbooksPdf.com

25.5.1.2 ANSI/UL

25.5.1.2.1 ANSI/UL 506 "Standard for Safety for Specialty Transformers"

Scope

These requirements cover air-cooled transformers and reactors for general use, and ignition transformers for use with gas burners and oil burners. Transformers incorporating overcurrent or overtemperature protective devices, transient voltage surge protectors, or power factor correction capacitors are also covered by these requirements. These transformers are intended to be used in accordance with the National Electrical Code, NFPA 70.

These requirements do not cover liquid-immersed transformers, variable voltage autotransformers, transformers having a nominal primary rating of more than 600 V, transformers having overvoltage taps rated over 660 V, cord- and plug-connected transformers (other than gas-tube-sign transformers), garden light transformers, voltage regulators, swimming pool and spa transformers, or other special types of transformers covered in requirements for other electrical devices or appliances.

These requirements do not cover the following:

1. Autotransformers used in industrial control equipment, which are evaluated in accordance with the requirements for industrial control equipment, UL 508.
2. Class 2 or Class 3 transformers, which are evaluated in accordance with the Standard for Class 2 and Class 3 Transformers, UL 1585.

   Class 2 Transformers: These transformers are dry-type, step-down, insulating specialty transformers suitable for use in National Electrical Code Class 2 circuits. They are generally used in remote-control, low-energy power, and signal circuits for the operation of bells, chimes, furnace controls, valves, relays, solenoids, and the like. Their secondary voltage is limited to 30 V.

   Class 3 Transformers: These transformers are similar to Class 2 transformers, but their output voltage is greater than 30 V and less than 100 V.
3. Toy transformers, which are evaluated in accordance with the Standard for Toy Transformers, UL 697.
4. Transformers for use with radio- and television-type appliances, which are evaluated in accordance with the requirements for transformers and motor transformers for use in audio-, radio-, and television-type appliances, UL 1411.
5. Transformers for use with high-intensity-discharge (HID) lamps, which are evaluated in accordance with the Standard for High-Intensity-Discharge Lamp Ballasts, UL 1029.
6. Transformers for use with fluorescent lamps, which are evaluated in accordance with the Standard for Fluorescent-Lamp Ballasts, UL 935.
7. Ventilated transformers for general use or nonventilated transformers for general use (other than compound filled or exposed core types), which are evaluated in accordance with the requirements for dry-type general-purpose and power transformers, UL 1561.
8. Dry-type distribution transformers rated over 600 V, which are evaluated in accordance with the requirements for transformers, distribution, dry-type of over 600 V, UL 1562.
9. Transformers incorporating rectifying or wave-shaping circuitry evaluated in accordance with the requirements for power units other than Class 2, UL 1012.
10. Transformers of the direct plug-in type evaluated in accordance with the requirements for Class 2 power units, UL 1310.
11. Transformers for use with electric discharge and neon tubing, which are evaluated in accordance with the Standard for Neon Transformers and Power Supplies, UL 2161.

A product that contains features, characteristics, components, materials, or systems new or different from those in use when the standard was developed, and that involves a risk of fire, electric shock, or injury to persons, shall be evaluated using the appropriate additional component and end-product

www.EngineeringEbooksPdf.com

requirements as determined necessary to maintain the level of safety for the user of the product as originally anticipated by the intent of this standard.

25.5.1.2.2 ANSI/UL 1446 "Standard for Safety for Systems of Insulating Materials—General"

Scope

These requirements cover test procedures to be used in the evaluation of Class 120(E) or higher electrical insulation systems intended for connection to branch circuits rated 600 V or less. These requirements also cover the investigation of the substitution of minor components of insulation in a previously evaluated insulation system and also the test procedures to be used in the evaluation of magnet wire coatings, magnet wires, and varnishes.

These requirements do not cover a single insulating material or a simple combination of materials, such as a laminate or a varnished cloth.

These requirements do not cover insulation systems exposed to radiation or operating in oils, refrigerants, soaps, or other media that potentially degrade insulating materials.

These requirements shall be modified or supplemented as determined by the applicable requirements in the end-product standard covering the device, appliance, or equipment in which the insulation system is used.

Additional consideration shall be given to conducting tests for an insulating material, such as a coil encapsulant, that is used as the ultimate electrical enclosure.

Additional consideration shall be given to conducting tests for an insulating material or component that is a functional support of, or in direct contact with, a live part.

A product that contains features, characteristics, components, materials, or systems new or different from those in use when the standard was developed, and that involves a risk of fire, electric shock, or injury to persons, shall be evaluated using the appropriate additional component and end-product requirements as determined necessary to maintain the level of safety for the user of the product as originally anticipated by the intent of this standard.

25.5.1.3 IEC TC96

Scope

Standardization in the field of safety of transformers, power supply units, and reactors with a rated voltage not exceeding 1000 V and a rated frequency not exceeding 1 MHz is of the following kinds:

1. Power transformers and power supply units with a rated power less than 1 kVA single-phase and 5 kVA polyphase
2. Special transformers and power supply units other than those intended to supply distribution networks, in particular, transformers and power supply units intended to allow the application of protective measures against electric shock as defined by IEC TC 64; electrical installations in buildings, with no limitation of rated power, but in certain cases including limitation of voltage

Reactors with a rated power less than 2 kVAR single-phase and 10 kVAR polyphase

Special reactors other than those covered by IEC 289

Note: Excluded are switch mode power supplies (dealt with by SC 22E).

Safety Group Function

Special transformers and power supply units other than those intended to supply distribution networks, in particular, transformers and power supply units intended to allow the application of protective measures against electric shock as defined by TC 64, with no limitation of rated power but in certain cases including limitation of voltage.

www.EngineeringEbooksPdf.com

Relevant Documents

IEC TC96	Description
61558-1	Safety of power transformers, power supplies, reactors and similar products
61558-2-1	Particular requirements for separating transformers for general use
61558-2-2	Particular requirements for separating control transformers
61558-2-3	Particular requirements for ignition transformers for gas or oil burners
61558-2-4	Particular requirements for isolating transformers for general use
61558-2-5	Particular requirements for shaver transformers and supply
61558-2-6	Particular requirements for safety isolating transformers for general use
61558-2-7	Particular requirements for toys
61558-2-8	Particular requirements for bell and chime
61558-2-9	Particular requirements for transformers for Class III hand lamps (NP)
61558-2-10	Particular requirements for high insulation level transformers (NP)
61558-2-11	Particular requirements for stray field transformers
61558-2-12	Particular requirements for stabilizing transformers
61558-2-13	Particular requirements for autotransformers
61558-2-14	Particular requirements for variable transformers
61558-2-15	Particular requirements for insulating transformers for the supply of medical rooms (CDV)
61558-2-16	Particular requirements for power supply units and similar (NP)
61558-2-17	Particular requirements for transformers for switch mode power
61558-2-18	Particular requirements for medical appliances
61558-2-19	Particular requirements for mainsborne perturbation attenuation transformers with earthed midpoint (CDV)
61558-2-20	Particular requirements for small reactors (CDV)
61558-2-21	Particular requirements for transformers with special dielectric (liquid SF_6)
61558-2-22	Particular requirements for transformers with rated maximum temperature for luminaries (NP)
61558-2-23	Particular requirements for transformers for construction sites (CDV)

25.5.2 Electronics Power Transformers

25.5.2.1 IEEE 295 "Electronics Power Transformers"

Scope

This standard pertains to power transformers and inductors that are used in electronic equipment and supplied by power lines or generators of essentially sine wave or polyphase voltage. Guides to application and test procedures are included. Appendices contain certain precautions, recommended practices, and guidelines for typical values. Provision is made for relating the characteristics of transformers to the associated rectifiers and circuits.

Certain pertinent definitions, which have not been found elsewhere, are included with appropriate discussion. Attempts are made to alert the industry and profession to factors that are commonly overlooked.

This standard includes, but is not limited to, the following specific transformers and inductors:

- Rectifier supply transformers for either high- or low-voltage supplies
- Filament and cathode heater transformers
- Transformers for alternating current resonant charging circuits
- Inductors used in rectifier filters
- Autotransformers with fixed taps

kVA range: 0–1000+

Voltage: 0–15 kV

www.EngineeringEbooksPdf.com

25.5.3 Low-Voltage Medium-Power Dry-Type Transformers

25.5.3.1 NEMA

25.5.3.1.1 NEMA ST-20 "Dry-Type Transformers for General Applications"

Scope

This standards publication applies to single-phase and polyphase dry-type transformers (including autotransformers and noncurrent-limiting reactors) for supplying energy to power, heating, and lighting circuits and is designed to be installed and used in accordance with the *National Electrical Code*.

It applies to transformers with and/or without accessories having the following ratings:

1. 1.2 kV class (600 V nominal and below) and 0.25 kVA and up.
2. Above 1.2 kV class sound level limits are supplied. These limits are applicable to commercial, institutional, and industrial transformers.

This standards publication applies to transformers, commonly known as general-purpose transformers, for commercial, institutional, and industrial use in nonhazardous locations both indoors and outdoors. The publication includes ratings and information on the application, design, construction, installation, operation, inspection, and maintenance as an aid in obtaining a high level of safe performance. These standards, except for those for ratings, may be applicable to transformers having other than standard ratings. These standards, as well as applicable local codes and regulations, should be consulted to secure the safe installation, operation, and maintenance of dry-type transformers.

This publication does not apply to the following types of specialty transformers: control, industrial control, Class 2, signaling, oil- or gas-burner ignition, luminous tube, cold cathode lighting, and incandescent and mercury lamps. Also excluded are network transformers, unit substation transformers, and transformer distribution centers.

25.5.3.1.2 NEMA TP-1 "Guide for Determining Energy Efficiency for Distribution Transformers"

Note that this document has been superseded by 10CFR Part 431 Energy Conservation Program for Commercial Equipment: Distribution Transformers Energy Conservation Standards, published on October 12, 2007 and effective January 1, 2010.

Scope

This standard is intended for use as a basis for determining the energy efficiency performance of the equipment covered and to assist in the proper selection of such equipment.

This standard covers single-phase and three-phase dry-type and liquid-filled distribution transformers as defined in the following table:

Voltage Class	Primary Voltage Secondary Voltage	34.5 kV and below 600 V and below
Liquid rating	Single phase	10–833 kVA
	Three phase	15–2500 kVA
Dry rating	Single phase	15–833 kVA
	Three phase	15–2500 kVA

Note: Includes all products at 1.2 kV and below

Products excepted from this standard include the following:

1. Liquid-filled transformers below 10 kVA
2. Dry-type transformers below 15 kVA
3. Drives transformers, both AC and DC
4. All rectifier transformers and transformers designed for high harmonics

www.EngineeringEbooksPdf.com

5. Autotransformers
6. Nondistribution transformers, such as UPS transformers
7. Special impedance and harmonic transformers
8. Regulating transformers
9. Sealed and nonventilated transformers
10. Retrofit transformers
11. Machine tool transformers
12. Welding transformers
13. Transformers with tap ranges greater than 15%
14. Transformers with frequency other than 60 Hz
15. Grounding transformers
16. Testing transformers

25.5.3.1.3 NEMA TP-2 "Standard Test Method for Measuring the Energy Consumption of Distribution Transformers"

Scope

This standard is intended for use as a basis for determining the energy efficiency performance of the equipment covered and to assist in the proper selection of such equipment.

This standard covers single-phase and three-phase dry-type and liquid-immersed distribution transformers (transformers for transferring electrical energy from a primary distribution circuit to a secondary distribution circuit or within a secondary distribution circuit) as defined in the following table:

Transformer Type	No. Phases	Rating Range (kVA)
Liquid-immersed	Single phase	10–833
	Three phase	15–2500
Dry-type	Single phase	15–833
	Three phase	15–2500

This standard addresses the test procedures for determining the efficiency performance of the transformers covered in NEMA Publication TP-1.

Note: Includes all products at 1.2 kV and below.

Products excepted from this standard include the following:

1. Liquid-filled transformers below 10 kVA
2. Dry-type transformers below 15 kVA
3. Transformers connected to converter circuits
4. All rectifier transformers and transformers designed for high harmonics
5. Autotransformers
6. Nondistribution transformers, such as UPS transformers
7. Special impedance and harmonic transformers
8. Regulating transformers
9. Sealed and nonventilated transformers
10. Retrofit transformers
11. Machine tool transformers
12. Welding transformers
13. Transformers with tap ranges greater than 15%

www.EngineeringEbooksPdf.com

14. Transformers with frequency other than 60 Hz
15. Grounding transformers
16. Testing transformers

25.5.3.1.4 NEMA TP-3 "Standard for the Labeling of Distribution Transformer Efficiency"

Scope

This standard defines the labeling of distribution transformers tested to the efficiency levels specified in TP-1. The label becomes the certificate of conformance to the established efficiency of the transformer.

25.5.3.1.5 NEMA TR-1 1 Transformers, Regulators, and Reactors

This is originally written to cover general specifications and requirements for distribution transformers, power transformers, voltage regulators, and reactors. Most of the contents have been moved to IEEE standards in C57, but audible noise limits remain unique within TR-1.

25.5.3.2 ANSI/UL

25.5.3.2.1 ANSI/UL 1561 "Standard for Safety for Dry-Type General Purpose and Power Transformers"

Scope

These requirements cover the following:

1. General-purpose and power transformers of the air-cooled, dry, ventilated, and no ventilated types rated no more than 500 kVA single-phase or no more than 1500 kVA three-phase to be used in accordance with the National Electrical Code, NFPA 70. Constructions include step-up, step-down, insulating, and autotransformer type transformers as well as air-cooled and dry-type reactors.
2. General-purpose and power transformers of the exposed core, air-cooled, dry, and compound-filled types rated more than 10 kVA but no more than 333 kVA single-phase or no more than 1000 kVA three-phase to be used in accordance with the National Electrical Code, NFPA 70. Constructions include step-up, step-down, insulating, and autotransformer type transformers as well as air-cooled, dry, and compound-filled type reactors.

These requirements do not cover ballasts for HID lamps (metal halide, mercury vapor, and sodium types) or fluorescent lamps, exposed core transformers, compound-filled transformers, liquid-filled transformers, voltage regulators, general use or special types of transformers covered in requirements for other electrical equipment, autotransformers forming part of industrial control equipment, motor-starting autotransformers, variable voltage autotransformers, transformers having a nominal primary or secondary rating of more than 600 V, or overvoltage taps rated greater than 660 V.

These requirements do not cover transformers provided with wave-shaping or rectifying circuitry. Wave-shaping or rectifying circuits may include components such as diodes and transistors. Components such as capacitors, transient voltage surge suppressors, and surge arresters are not considered to be wave-shaping or rectifying devices.

A product that contains features, characteristics, components, materials, or systems new or different from those in use when the standard was developed, and that involves a risk of fire, electric shock, or injury to persons, shall be evaluated using the appropriate additional component and end-product requirements as determined necessary to maintain the level of safety for the user of the product as originally anticipated by the intent of this standard.

www.EngineeringEbooksPdf.com

25.5.3.2.2 ANSI/UL 1446 "Standard for Safety for Systems of Insulating Materials—General"

Scope

These requirements cover test procedures to be used in the evaluation of Class 120(E) or higher electrical insulation systems intended for connection to branch circuits rated 600 V or less. These requirements also cover the investigation of the substitution of minor components of insulation in a previously evaluated insulation system and also the test procedures to be used in the evaluation of magnet wire coatings, magnet wires, and varnishes.

These requirements do not cover a single insulating material or a simple combination of materials, such as a laminate or a varnished cloth.

These requirements do not cover insulation systems exposed to radiation or operating in oils, refrigerants, soaps, or other media that potentially degrade insulating materials.

These requirements shall be modified or supplemented as determined by the applicable requirements in the end-product standard covering the device, appliance, or equipment in which the insulation system is used.

Additional consideration shall be given to conducting tests for an insulating material, such as a coil encapsulant, that is used as the ultimate electrical enclosure.

Additional consideration shall be given to conducting tests for an insulating material or component that is a functional support of, or in direct contact with, a live part.

A product that contains features, characteristics, components, materials, or systems new or different from those in use when the standard was developed, and that involves a risk of fire, electric shock, or injury to persons, shall be evaluated using the appropriate additional component and end-product requirements as determined necessary to maintain the level of safety for the user of the product as originally anticipated by the intent of this standard.

25.5.4 Medium- and High-Voltage Liquid-Filled and Dry-Type Transformers

25.5.4.1 ANSI C57/IEEE C57 Documents

Scope

These standards are intended as a basis for the establishment of performance, interchangeability, and safety requirements of equipment described and for assistance in the proper selection of such equipment.

Electrical, mechanical, and safety requirements of ventilated, nonventilated, and sealed dry-type distribution and power transformers or autotransformers (single and polyphase, with a voltage of 601 V or higher in the highest voltage winding) are described. Instrument transformers and rectifier transformers are also included.

The information in these standards applies to all dry-type transformers except the following:

1. Arc-furnace transformers
2. Rectifier transformers
3. Specialty transformers
4. Mine transformers

When these standards are used on a mandatory basis, the word *shall* indicates mandatory requirements; the words *should* and *may* refer to matters that are recommended or permissive, but not mandatory.

Note: The introduction of this voluntary consensus standard describes the circumstances under which the standard may be used on a mandatory basis.

www.EngineeringEbooksPdf.com

Relevant Documents

IEEE 259	*Standard Test Procedure for Evaluation of Systems of Insulation for Specialty Transformers (ANSI)*
IEEE 638	*Standard for Qualification of Class 1E Transformers for Nuclear Generating Stations*
IEEE 1276	*Guide for the Application of High-Temperature Insulation Materials in Liquid-Immersed Power Transformers*
IEEE 1538	*Guide for Determination of Maximum Winding Temperature Rise in Liquid-Filled Transformers*
ANSI C57.12.00	IEEE Standard General Requirements for Liquid-Immersed Distribution, Power, and Regulating Transformers (ANSI)
ANSI C57.12.01	IEEE Standard General Requirements for Dry-Type Distribution and Power Transformers Including Those with Solid Cast and/or Resin-Encapsulated Windings
IEEE C57.12.10	IEEE Standard Requirements for Liquid Immersed Power Transformers—230 kV and below, 833/958-8333/10417 kVA, Single-Phase and 750/862 through 60,000/80,000/100,000 kVA, Three-Phase without Load Tap Changing; and 3750/4687 through 60,000/80,000/100,000 kVA Three-Phase with Load Tap Changing—Safety Requirement
IEEE C57.12.20	*IEEE Standard for Overhead Type Distribution Transformers*, 500 kVA and Smaller; High Voltage, 34,500 V and below; Low Voltage 7,970/13,800 Y V and below
IEEE C57.12.21	*American National Standard: Requirements for Pad-Mounted, Compartmental-Type Self-Cooled, Single-Phase Distribution Transformers with High Voltage Bushings*; High Voltage, 34,500 GRY/19,900 V and below; Low Voltage, 240/120 V; 167 kVA and Smaller
IEEE C57.12.22	*American National Standard Requirements for Pad-Mounted, Compartmental-Type Self-Cooled, Three-Phase Distribution Transformers with High Voltage Bushings*; High Voltage, 34,500 GRY/19,900 V and below; Low Voltage, 480 V and below; 2500 kVA and Smaller
IEEE C57.12.23	IEEE *Standard for Underground Type, Self-Cooled, Single-Phase, Distribution Transformers with Separable Insulated High Voltage Connectors*; High Voltage 25,000 V and below, Low Voltage 600 V and below, 167 kVA and Smaller
IEEE C57.12.24	*American National Standard for Transformers, Underground-Type Three-Phase Distribution Transformers*, 2,500 kVA and Smaller; High Voltage, 34,500 GRY/19,900 V and below; Low Voltage, 480 V and below
IEEE C57.12.34	IEEE *Standard for Compartment-Type, Self-Cooled, Three-Phase, Distribution Transformers* (2,500 kVA); High Voltage: 34,500 GrY/19,900 V and below; Low Voltage: 480 V and below
IEEE C57.12.35	*Standard for Bar Coding for Distribution Transformers*
IEEE C57.12.37	IEEE *Standard for the Electronic Reporting of Distribution Transformer Test Data*
ANSI C57.12.40	American National Standard Requirements for Secondary Network Transformers—Subway and Vault Types (Liquid-Immersed)
IEEE C57.12.44	Standard Requirements for Secondary Network Protectors
ANSI C57.12.50	American National Standard Requirements for Ventilated Dry-Type Distribution Transformers, 1–500 kVA, Single-Phase, and 15–500 kVA, Three-Phase, with High-Voltage 601–34,500 V, Low-Voltage 120–600 V
ANSI C57.12.51	American National Standard Requirements for Ventilated Dry-Type Power Transformers, 501 kVA and Larger, Three-Phase, with High-Voltage 601–34,500 V, Low-Voltage 208Y/120–4,160 V
ANSI C57.12.52	American National Standard Requirements for Sealed Dry-Type Power Transformers, 501 kVA and Larger, Three-Phase, with High-Voltage 601–34,500 V, Low-Voltage 208Y/120–4,160 V
ANSI C57.12.55	American National Standard for Transformers—Dry-Type Transformers Used in Unit Installations, Including Unit Substations—Conformance Standard
IEEE C57.12.56	*Standard Test Procedure for Thermal Evaluation of Insulation Systems for Ventilated Dry-Type Power and Distribution Transformers*
ANSI C57.12.57	American National Standard for Transformers—Ventilated Dry-Type Network Transformers 2,500 kVA and below, Three-Phase, with High-Voltage 34,500 V and below, Low-Voltage 216Y/125 and 480Y/277 V—Requirements
IEEE C57.12.59	*Guide for Conducting a Transient Voltage Analysis of a Dry-Type Transformer Coil*
	Guide for Dry-Type Transformer through-Fault Current Duration
Draft C57.12.60	Guide for Test Procedures for Thermal Evaluation of Insulation Systems for Solid-Cast and Resin-Encapsulated Power and Distribution Transformers
ANSI C57.12.70	American National Standard Terminal Markings and Connections for Distribution and Power Transformers

(*continued*)

www.EngineeringEbooksPdf.com

Relevant Documents

IEEE C57.12.80	*Standard Terminology for Power and Distribution Transformers*
IEEE C57.12.91	*Standard Test Code for Dry-Type Distribution and Power Transformers*
IEEE C57.13	*Standard Requirements for Instrument Transformers*
IEEE C57.13.1	*Guide for Field Testing of Relaying Current Transformers*
IEEE C57.13.3	*Guide for the Grounding of Instrument Transformer Secondary Circuits and Cases*
IEEE C57.15	*Standard Requirements, Terminology, and Test Code for Step-Voltage and Induction-Voltage Regulators*
IEEE C57.16	*Standard Requirements, Terminology, and Test Code for Dry-Type Air-Core Series-Connected Reactors*
IEEE C57.18.10	*Standard Practices and Requirements for Semiconductor Power Rectifier Transformers*
IEEE C57.19.00	*Standard General Requirements and Test Procedures for Outdoor Power Apparatus Bushings*
IEEE C57.19.01	*Standard Performance Characteristics and Dimensions for Outdoor Apparatus Bushings*
IEEE C57.19.03	*Standard Requirements, Terminology, and Test Code for Bushings for DC Applications*
IEEE C57.19.100	*Guide for Application of Power Apparatus Bushings*
IEEE C57.21	*Standard Requirements, Terminology, and Test Code for Shunt Reactors Rated over 500 kVA*
IEEE C57.94	*Recommended Practice for the Installation, Application, Operation, and Maintenance of Dry-Type General Purpose Distribution and Power Transformers*
IEEE C57.96	*Guide for Loading Dry-Type Distribution and Power Transformers*
IEEE C57.98	*Guide for Transformer Impulse Tests (An errata sheet is available in PDF format)*
IEEE C57.100	*Standard Test Procedure for Thermal Evaluation of Insulation Systems for Liquid Immersed Distribution and Power Transformers*
IEEE C57.105	*Guide for Application of Transformer Connections in Three-Phase Distribution Systems*
IEEE C57.110	*Recommended Practice for Establishing Transformer Capability When Supplying Nonsinusoidal Load Currents*
IEEE C57.116	*Guide for Transformers Directly Connected to Generators*
IEEE C57.117	*Guide for Reporting Failure Data for Power Transformers and Shunt Reactors on Electric Utility Power Systems*
IEEE C57.120	*IEEE Loss Evaluation Guide for Power Transformers and Reactors*
IEEE C57.121	*Draft Guide for Transformer Loss Measurements*
IEEE C57.123	*Guide for Acceptance and Maintenance of Less Flammable Hydrocarbon Fluid in Transformers*
IEEE C57.124	*Recommended Practice for the Detection of Partial Discharge and the Measurement of Apparent Charge in Dry-Type Transformers*
IEEE C57.125	*IEEE Guide for Failure Investigation, Documentation, and Analysis for Power Transformers and Shunt Reactors*
IEEE C57.127	*Trial-Use Guide for the Detection of Acoustic Emissions from Partial Discharges in Oil-Immersed Power Transformers*
IEEE C57.129	*Trial-Use General Requirements and Test Code for Oil-Immersed HVDC Converter Transformers*
IEEE C57.130	*Trial-Use Guide for the Use of Dissolved Gas Analysis during Factory Thermal Tests for the Evaluation of Oil-Immersed Transformers and Reactors*
IEEE C 57.131	Standard Requirements for Tap Changers
IEEE C57.133	*IEEE Guide for Short-Circuit Testing of Distribution and Power Transformers*
IEEE C57.134	*IEEE Guide for Determination of Hottest-Spot Temperature in Dry-Type Transformers*
IEEE C57.135	*Draft Guide for the Application, Specification, and Testing of Phase-Shifting Transformers*
IEEE C57.136	*Draft Guide for Sound Level Abatement and Determination for Liquid-Immersed Power Transformers and Shunt Reactors Rated over 500 kVA*
IEEE C57.138	*Recommended Practice for Routine Impulse Test for Distribution Transformers*
IEEE C57.140	*Guide for Evaluation and Recondition of Liquid-Immersed Power Transformers*
IEEE C57.142	*A Guide to Describe the Occurrence and Mitigation of Switching Transients Induced by Transformer and Breaker Interaction*
IEEE C57.143	Guide for Application for Monitoring Equipment to Liquid-Immersed Transformers and Components
IEEE C57.149	*Guide for the Application and Interpretation of Frequency Response Analysis for Oil-Immersed Transformers*
IEEE C57.150	*Guide for the Transportation of Transformers and Reactors Rated ≥10 MVA*

www.EngineeringEbooksPdf.com

25.5.4.2 NEMA Documents

25.5.4.2.1 NEMA TP-1 "Guide for Determining Energy Efficiency for Distribution Transformers"

Note that this document has been superseded by 10CFR Part 431 Energy Conservation Program for Commercial Equipment: Distribution Transformers Energy Conservation Standards, published October 12, 2007 and effective January 1, 2010.

Scope

This standard is intended for use as a basis for determining the energy efficiency performance of the equipment covered and to assist in the proper selection of such equipment.

This standard covers single-phase and three-phase dry-type and liquid-filled distribution transformers as defined in the following table:

Voltage Class	Primary Voltage Secondary Voltage	34.5 kV and below 600 V and below
Liquid rating	Single phase	10–833 kVA
	Three phase	15–2500 kVA
Dry rating	Single phase	15–833 kVA
	Three phase	15–2500 kVA

Note: Includes all products at 1.2 kV and below

Products excepted from this standard include the following:

1. Liquid-filled transformers below 10 kVA
2. Dry-type transformers below 15 kVA
3. Drives transformers, both AC and DC
4. All rectifier transformers and transformers designed for high harmonics
5. Autotransformers
6. Nondistribution transformers, such as UPS transformers
7. Special impedance and harmonic transformers
8. Regulating transformers
9. Sealed and nonventilated transformers
10. Retrofit transformers
11. Machine tool transformers
12. Welding transformers
13. Transformers with tap ranges greater than 15%
14. Transformers with frequency other than 60 Hz
15. Grounding transformers
16. Testing transformers

25.5.4.2.2 NEMA TP-2 "Standard Test Method for Measuring the Energy Consumption of Distribution Transformers"

This document is also superseded by the requirements for testing in Federal Register 10CFR431, Entry 12411 in Volume 76 No. 44, issued Monday, March 7, 2011.

Scope

This standard is intended for use as a basis for determining the energy efficiency performance of the equipment covered and to assist in the proper selection of such equipment.

www.EngineeringEbooksPdf.com

This standard covers single-phase and three-phase dry-type and liquid-immersed distribution transformers (transformers for transferring electrical energy from a primary distribution circuit to a secondary distribution circuit or within a secondary distribution circuit) as defined in the following table:

Transformer Type	No. Phases	Rating Range (kVA)
Liquid-immersed	Single phase	10–833
	Three phase	15–2500
Dry-type	Single phase	15–833
	Three phase	15–2500

This standard addresses the test procedures for determining the efficiency performance of the transformers covered in NEMA Publication TP-1.

Note: Includes all products at 1.2 kV and below

Products excepted from this standard include the following:

1. Liquid-filled transformers below 10 kVA
2. Dry-type transformers below 15 kVA
3. Transformers connected to converter circuits
4. All rectifier transformers and transformers designed for high harmonics
5. Autotransformers
6. Nondistribution transformers, such as UPS transformers
7. Special impedance and harmonic transformers
8. Regulating transformers
9. Sealed and nonventilated transformers
10. Retrofit transformers
11. Machine tool transformers
12. Welding transformers
13. Transformers with tap ranges greater than 15%
14. Transformers with frequency other than 60 Hz
15. Grounding transformers
16. Testing transformers

25.5.4.2.3 NEMA TP-3 "Standard for the Labeling of Distribution Transformer Efficiency"

Scope

This standard defines the labeling of distribution transformers tested to the efficiency levels specified in TP-1. The label becomes the certificate of conformance to the established efficiency of the transformer.

25.5.4.2.4 NEMA TR-1 "1993 Transformers, Regulators, and Reactors"

This is originally written to cover general specifications and requirements for distribution transformers, power transformers, voltage regulators, and reactors. Most of the contents have been moved to IEEE standards in C57, but audible noise limits remain unique within TR-1.

Scope

This publication provides a list of all ANSI C57 standards that have been approved by NEMA. In addition, it includes certain NEMA standard test methods, test codes, properties, etc., of liquid-immersed transformers, regulators, and reactors that are not ANSs.

www.EngineeringEbooksPdf.com

25.5.4.3 ANSI/UL 1562 "Standard for Safety for Transformers, Distribution, Dry-Type—Over 600 V"

Scope

These requirements cover single-phase or three-phase, dry-type, distribution transformers. The transformers are provided with ventilated or nonventilated enclosures and are rated for a primary or secondary voltage from 601 to 35,000 V and from 1 to 5,000 kVA.

These transformers are intended for installation in accordance with the National Electrical Code.

These requirements do not cover the following transformers:

1. Instrument transformers
2. Step-voltage and induction-voltage regulators
3. Current regulators
4. Arc-furnace transformers
5. Rectifier transformers
6. Specialty transformers (such as rectifier, ignition, gas tube sign transformers, and the like)
7. Mining transformers
8. Motor-starting reactors and transformers

These requirements do not cover transformers under the exclusive control of electrical utilities utilized for communication, metering, generation, control, transformation, transmission, and distribution of electric energy regardless of whether such transformers are located indoors, in buildings and rooms used exclusively by utilities for such purposes; or outdoors, on property owned, leased, established rights on private property; or on public rights of way (highways, streets, roads, and the like).

A product that contains features, characteristics, components, materials, or systems new or different from those in use when the standard was developed, and that involves a risk of fire, electric shock, or injury to persons, shall be evaluated using the appropriate additional component and end-product requirements as determined necessary to maintain the level of safety for the user of the product as originally anticipated by the intent of this standard.

25.5.4.4 IEC Technical Committee 14 Power Transformers

Scope

To prepare international standards for power transformers, on-load tap changers, and reactors, without limitation of voltage or power (instrument transformers, testing transformers, traction transformers mounted on rolling stock, and welding transformers are not included).

Relevant Documents

60076-1	General requirements
60076-2	Temperature rise
60076-3	Insulation levels dielectric tests and external clearances in air
60076-4	Guide for lighting impulse and switching impulse testing
60076-5	Ability to withstand short-circuit
60076-6	Reactors [IEC 289]
60076-7	Loading guide for oil-immersed power transformers [IEC905]
60076-8	Power transformers—Application guide
60076-9	Terminal and tapping markings [IEC 616]

(*continued*)

www.EngineeringEbooksPdf.com

Relevant Documents

60076-10	Determination of transformer reactor sound levels
60076-11	Dry-type power transformers [IEC726]
60076-12	Loading guide for dry-type power transformers [IEC905]
60076-13	Self-protected liquid-filled transformers
60076-14	Design and application of liquid-immersed power transformers using high-temperature insulation materials
60076-15	Gas-filled-type power transformers (underdevelopment)
60076-16	Transformers for wind power applications
60076-17	Evaluation of electromagnetic fields around power transformers
60076-18	Measurement of frequency response
60076-19	Rules for the determination of uncertainties in the measurement of losses in power transformers
60076-20	Energy efficiency for distribution transformers
60214-1	Tap changers
60214-2	Tap changer—Application guide
61378	Convertor transformers
61378-1	Convertor transformers—Part 1: Transformers for industrial applications
61378-2	Convertor transformers—Part 2: Transformers for HVDC applications
61378-3	Convertor transformers—Part 3: Application guide

Acknowledgments

Many thanks are offered by the author for the assistance that has been rendered by representatives of the National Electrical Manufacturer's Association (NEMA), by American National Standards Institute, and by individuals from IEEE, IEC, EEI, EL & P.

www.EngineeringEbooksPdf.com

Power Engineering

The Electric Power Engineering Handbook

ELECTRIC POWER TRANSFORMER ENGINEERING

THIRD EDITION

Electric Power Transformer Engineering, Third Edition expounds the latest information and developments to engineers who are familiar with basic principles and applications, perhaps including a hands-on working knowledge of power transformers. Targeting all from the merely curious to seasoned professionals and acknowledged experts, its content is structured to enable readers to easily access essential material in order to appreciate the many facets of an electric power transformer.

Topically structured in three parts, the book:

- Illustrates for electrical engineers the relevant theories and principles (concepts and mathematics) of power transformers
- Devotes complete chapters to each of 10 particular embodiments of power transformers, including power, distribution, phase-shifting, rectifier, dry-type, and instrument transformers, as well as step-voltage regulators, constant-voltage transformers, transformers for wind turbine generators and photovoltaic applications, and reactors
- Addresses 14 ancillary topics including insulation, bushings, load tap changers, thermal performance, testing, protection, audible sound, failure analysis, installation and maintenance and more.

Important chapters have been retained from the second edition; most have been significantly expanded and updated for this third installment. Each chapter is replete with photographs, equations, and tabular data, and this edition includes a new chapter on transformers for use with wind turbine generators and distributed photovoltaic arrays. Jim Harlow and his esteemed group of contributors offer a glimpse into the enthusiastic community of power transformer engineers responsible for this outstanding and best-selling work.

This book is part of *The Electric Power Engineering Handbook, Third Edition*, first published by CRC Press in 2000. As with the other books in this set, *Electric Power Transformer Engineering* supplies a high level of detail and, more importantly, a tutorial style of writing and use of photographs and graphics to help the reader understand the material.

Cover images supplied by **Big StockPhoto**.

K12643

CRC Press
Taylor & Francis Group
an informa business
www.crcpress.com

6000 Broken Sound Parkway, NW
Suite 300, Boca Raton, FL 33487
711 Third Avenue
New York, NY 10017
2 Park Square, Milton Park
Abingdon, Oxon OX14 4RN, UK

ISBN: 978-1-4398-5629-1
90000
9 781439 856291

www.EngineeringEbooksPdf.com