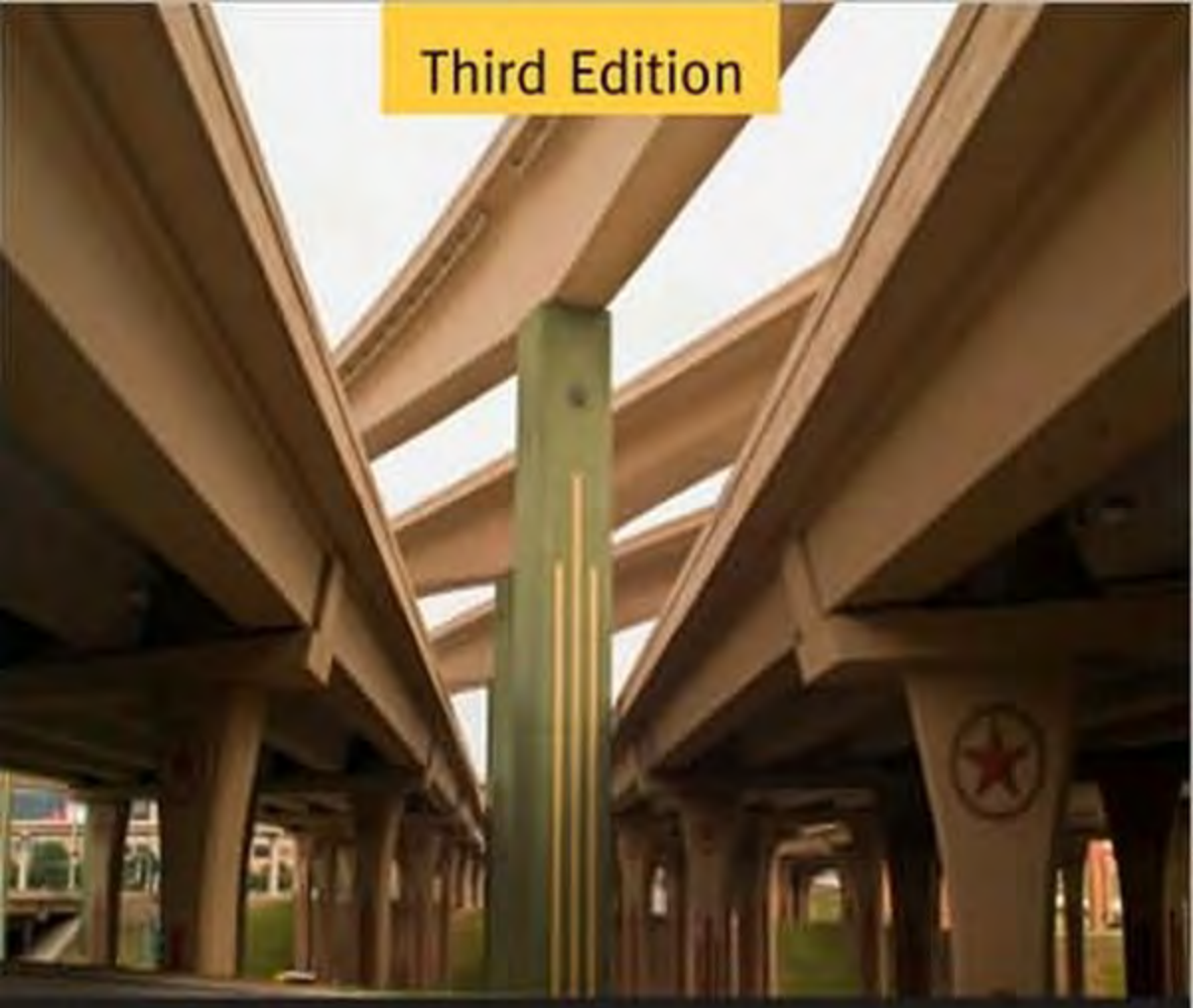

Third Edition

HIGHWAY ENGINEERING *Handbook*

Roger L. Brockenbrough

www.EngineeringEBooksPdf.com

HIGHWAY ENGINEERING HANDBOOK

Building and Rehabilitating the Infrastructure

Roger L. Brockenbrough, P.E. Editor
President
R. L. Brockenbrough & Associates, Inc.
Pittsburgh, Pennsylvania

Third Edition

New York Chicago San Francisco Lisbon London Madrid Mexico City Milan New Delhi San Juan Seoul Singapore Sydney Toronto

www.EngineeringEBooksPdf.com

The McGraw-Hill Companies

Library of Congress Cataloging-in-Publication Data
Highway engineering handbook : building and rehabilitating the infrastructure /
Roger L. Brockenbrough, editor.—3rd ed.
p. cm.
Includes bibliographical references and index.
ISBN 978-0-07-159763-0 (alk. paper)
1. Highway engineering—United States—Handbooks, manuals, etc.
I. Brockenbrough, R. L.
TE23.H484 2009
625.7—dc22 2009002381

Copyright © 2009, 2003, 1996 by The McGraw-Hill Companies, Inc.

All rights reserved. Printed in the United States of America. Except as permitted under the United States Copyright Act of 1976, no part of this publication may be reproduced or distributed in any form or by any means, or stored in a data base or retrieval system, without the prior written permission of the publisher.

1 2 3 4 5 6 7 8 9 0 DOC/DOC 0 1 5 4 3 2 1 0 9

ISBN 978-0-07-159763-0
MHID 0-07-159763-8

Sponsoring Editor
Larry S. Hager
Editing Supervisor
Stephen M. Smith
Production Supervisor
Richard C. Ruzycka
Project Manager
Anupriya Tyagi, International Typesetting and Composition
Copy Editor
Surendra Nath Shivam, International Typesetting and Composition
Proofreader
Ragini Pandey, International Typesetting and Composition
Art Director, Cover
Jeff Weeks
Composition
International Typesetting and Composition

Printed and bound by RR Donnelley.

McGraw-Hill books are available at special quantity discounts to use as premiums and sales promotions, or for use in corporate training programs. To contact a special sales representative, please visit the Contact Us page at www.mhprofessional.com.

This book is printed on acid-free paper.

Information contained in this work has been obtained by The McGraw-Hill Companies, Inc. ("McGraw-Hill") from sources believed to be reliable. However, neither McGraw-Hill nor its authors guarantee the accuracy or completeness of any information published herein, and neither McGraw-Hill nor its authors shall be responsible for any errors, omissions, or damages arising out of use of this information. This work is published with the understanding that McGraw-Hill and its authors are supplying information but are not attempting to render engineering or other professional services. If such services are required, the assistance of an appropriate professional should be sought.

www.EngineeringEBooksPdf.com

ABOUT THE EDITOR

Roger L. Brockenbrough, P.E., is an engineering consultant involved in the development of technical information to facilitate improved designs. He is also the editor of McGraw-Hill's *Structural Steel Designer's Handbook*. Mr. Brockenbrough is a member of the AISC Specifications Committee, Chair of the AISI Committee on Specifications for the Design of Cold-Formed Steel Structural Members, a past member of the Transportation Research Board Committee on Subsurface Soil-Structure Interaction, a member of the ASTM Committee on Corrugated Steel Pipe Specifications, and a Fellow and Life Member of ASCE. He was recently honored as a member of the Virginia Tech Civil and Environmental Engineering Academy of Distinguished Alumni.

www.EngineeringEBooksPdf.com

CONTENTS

Contributors **xi**

Preface to the Third Edition **xiii**

Preface to the Second Edition **xv**

Preface to the First Edition **xvii**

Factors for Conversion to SI Units of Measurement **xix**

Chapter Environmental Issues **1**
1. ***James R. Brown and Samuel Less, AICP***

1.1 Environmental Issues Affecting Highway Projects *2*

1.2 Federal Requirements Governing Transportation Planning and the Environment *3*

1.3 National Environmental Policy Act of 1969 (NEPA) *5*

1.4 Federal Requirements Governing Resource-Specific Environmental Aspects *23*

1.5 Lead-Based Paint Removal *39*

1.6 Resource Recovery and Use of Waste Material *52*

Chapter Highway Location, Design, and Traffic **67**
2. ***Larry J. Shannon, P.E.***

2.1 Transportation Development Process *67*

2.2 Geometric Design *76*

2.3 Cross-Section Design *117*

2.4 Intersection Design *147*

2.5 Interchange Ramp Design *164*

2.6 Collector-Distributor Roads *173*

2.7 Multilane Ramp and Roadway Terminals and Transitions *175*

2.8 Service Roads *181*

2.9 Access to Public Roads *183*

2.10 Driveway Design *183*

2.11 The Cost of Congestion *195*

2.12 Intelligent Vehicle Highway Systems *197*

2.13 High-Occupancy Vehicle Lanes *199*

2.14 Highway Construction Plans *209*

www.EngineeringEBooksPdf.com

2.15 References *221*

Chapter Pavement Design and Rehabilitation **223**
3. ***Aric A. Morse, P.E., and Roger L. Green, P.E.***

3.1 Rigid Pavement *224*

3.2 Flexible Pavement *232*

3.3 Composite Pavement (Overlays) *233*

3.4 Development of AASHTO Pavement Design Equations *233*

3.5 Parameters for AASHTO Pavement Design *235*

3.6 Rigid Pavement Design Procedure *257*

3.7 Flexible Pavement Design Procedure *266*

3.8 Pavement Management *270*

www.EngineeringEBooksPdf.com

3.9 Methods of Pavement Rehabilitation *296*

3.10 Pavement Preventive Maintenance *301*

3.11 Life Cycle Cost Analysis of Pavements *306*

3.12 Reference Material *309*

Chapter 4. Bridge Engineering **311**

Walter J. Jestings, P.E., and Mahir Sen, P.E.

4.1 Client-Consultant Relationship *311*

4.2 Aesthetic Considerations *313*

4.3 Bridge Design Specifications *313*

4.4 Bridge Geometrics *314*

4.5 Basic Bridge Materials *316*

4.6 Bridge Deck Materials and Systems *321*

4.7 Concrete Bridge Deck Design *323*

4.8 Concrete Bridge Deck Construction *324*

4.9 Concrete Bridge Deck Protection *325*

4.10 Deck Surfaces and Deck Overlays *327*

4.11 Selection of Materials for Main Superstructure Members *327*

4.12 Corrosion Protection of New Steel Bridges *328*

4.13 Weathering Steel *329*

4.14 Deflection and Expansion Joints *330*

4.15 Continuity and Jointless Bridges *335*

4.16 Characteristics and Selection of Bridge Types *336*

4.17 Determination of Span Lengths *344*

4.18 Bridge Widening and Rehabilitation *344*

4.19 Repainting of Existing Bridges *346*

4.20 Deck Drainage *347*

4.21 Bridge Bearings *348*

4.22 Provision for Inspection of New Bridges *354*

4.23 Scour *354*

4.24 Seismic Design *356*

Chapter 5. Culverts, Drainage, and Replacements for Bridges **359**

Kevin E. White, P.E.

5.1 Hydrology *359*

5.2 Design of Open Channels *371*

5.3 Fundamentals of Open-Channel Flow *373*

www.EngineeringEBooksPdf.com

5.4 Design of Roadway Drainage *379*
5.5 Hydraulic Design of Culverts *388*
5.6 Culvert Types and Materials *403*
5.7 Culvert Service Life *413*
5.8 Structural Design of Drainage Pipes *418*
5.9 Replacements for Bridges *459*
5.10 Construction Methods *461*
5.11 Inspection *464*
5.12 Rehabilitation *470*

Chapter 6. Safety Systems **473**
Roger L. Brockenbrough, P.E.
6.1 Concepts and Benefits of Roadside Safety *473*
6.2 Application of Clear Zone Concept to Slope and Drainage Design *475*
6.3 Sign and Luminaire Supports and Similar Features *483*
6.4 Warrants for Roadside Barriers *488*

www.EngineeringEBooksPdf.com

6.5 Characteristics of Roadside Barriers *491*

6.6 Selection of Roadside Barriers *499*

6.7 Placement of Roadside Barriers *502*

6.8 Upgrading Roadside Barrier Systems *506*

6.9 Median Barriers *506*

6.10 Placement of Barriers on Sloped Medians *515*

6.11 Bridge Railings and Transitions *517*

6.12 Barrier End Treatments and Crash Cushions *522*

Chapter 7. Signing and Roadway Lighting

Part 1. Signing **533**
Brian L. Bowman, Ph.D., P.E.

7.1 Traffic Signing Needs *533*

7.2 Crashworthy Concerns of Roadside Features *539*

7.3 Design of Single-Mount Sign Supports *546*

7.4 Slip Base Designs *562*

7.5 Design of Multiple-Mount Sign Supports *566*

7.6 Maintenance and Construction of Sign Supports *574*

7.7 Fastening Sign Blanks on Single–Sign-Support Systems *588*

7.8 Multiple–Sign-Mount Installation *594*

7.9 Fastening Sign Blanks on Multiple–Sign-Support Systems *598*

7.10 Guidelines for Multiple–Sign-Support Construction *602*

7.11 Sign Vandalism Problems and Countermeasures *604*

7.12 Maintenance of Traffic Signs *608*

7.13 References on Signing *612*

Part 2. Roadway Lighting **615**
C. Paul Watson, P.E., Nelson Russell, P.E., and Brian L. Bowman, Ph.D., P.E.

7.14 Benefits and Fundamentals of Lighting *615*

7.15 Facility and Area Classifications *618*

7.16 Freeway Lighting Considerations *620*

7.17 Streets and Highways Other Than Freeways *623*

7.18 Tunnel Lighting *624*

7.19 Roadway Rest Areas *626*

7.20 Analytical Approach to Lighting Warrants *628*

www.EngineeringEBooksPdf.com

7.21 Types of Luminaires *628*
7.22 High Mast Lighting *635*
7.23 Roadside Safety *636*
7.24 Pole Types *639*
7.25 Electrical Hazard *640*
7.26 Foundations *642*
7.27 Bases *646*
7.28 Construction Considerations *649*
7.29 Acceptance Tests *651*
7.30 Maintenance Considerations *652*
7.31 Impact Performance Criteria *653*
7.32 Structural Design *655*
7.33 References on Lighting *655*

Chapter Retaining Walls **657**
8. ***A. J. Siccardi, P.E., and S. C. (Trever) Wang, Ph.D., P.E.***
8.1 Earth Retaining Wall Classification *658*
8.2 Earth Pressure Considerations and Determination *670*

www.EngineeringEBooksPdf.com

8.3 Foundation Investigations and Soils Analysis *681*
8.4 Rigid Retaining Walls *690*
8.5 Mechanically Stabilized Earth Walls *698*
8.6 Nongravity Cantilevered Wall Design *738*
8.7 Anchored Wall Design *743*
8.8 Soil Nailed Structures *749*
8.9 Prefabricated Modular Walls *767*
8.10 MSE Bridge Abutment Walls *767*
8.11 Reference Material *772*

Chapter 9. Noise Barriers **775**
James J. Hill, P.E., and Roger L. Brockenbrough, P.E.
9.1 Acoustical Concepts *776*
9.2 Acoustical Standards and Design *777*
9.3 Types of Noise Barriers *778*
9.4 Noise Barrier Selection *779*
9.5 Aesthetics *780*
9.6 Safety Considerations *784*
9.7 Maintenance Considerations *784*
9.8 Project Development Steps *785*
9.9 Structural Design *787*
9.10 Foundation Design *791*
9.11 Construction *792*

Chapter 10. Value Engineering and Life Cycle Cost **797**
Harold G. Tufty, CVS, FSAVE
10.1 FHWA Role in Value Engineering *797*
10.2 AASHTO Role in Value Engineering *803*
10.3 Value Engineering Job Plan Concept *808*
10.4 Value Engineering Job Plan Detail *809*
10.5 Fast Diagramming and the Job Plan *820*
10.6 Cost Model *825*
10.7 Worth Model *825*
10.8 Considerations in Life Cycle Cost Analysis *826*
10.9 Categories of Costs *828*
10.10 Methods of Calculation *829*
10.11 Examples of Successful VE Highway Studies *830*

www.EngineeringEBooksPdf.com

www.EngineeringEBooksPdf.com

CONTRIBUTORS

Brian L. Bowman, Ph.D., P.E. *Professor of Civil Engineering, Auburn University, Auburn, Alabama* (Chap. 7)

Roger L. Brockenbrough, P.E. *President, R. L. Brockenbrough & Associates, Inc., Pittsburgh, Pennsylvania* (Chaps. 6, 9)

James R. Brown *National Director, Transportation Environmental Programs, HDR Engineering, Inc., New York, New York* (Chap. 1)

Roger L. Green, P.E. *Pavement Research Engineer, Ohio Department of Transportation, Columbus, Ohio* (Chap. 3)

James J. Hill, P.E. *Structural Engineer, Consultant, Anoka, Minnesota* (Chap. 9)

Walter J. Jestings, P.E. *Formerly, Bridge Engineer, Parsons Brinckerhoff, Quade & Douglas, Inc., Atlanta, Georgia* (Chap. 4)

Samuel Less, AICP *Planning Director, Transportation Environmental Programs, HDR Engineering, Inc., New York, New York* (Chap. 1)

Aric A. Morse, P.E. *Pavement Design Engineer, Ohio Department of Transportation, Columbus, Ohio* (Chap. 3)

Nelson Russell, P.E. *Manager, Electrical Department, Volkert & Associates, Mobile, Alabama* (Chap. 7)

Mahir Sen, P.E. *Professional Associate, PB Americas, Inc., Newark, New Jersey* (Chap. 4)

Larry J. Shannon, P.E. *Highway Technical Manager, ms Consultants, Columbus, Ohio* (Chap. 2)

A. J. Siccardi, P.E. *Formerly, Staff Bridge Engineer, Colorado Department of Transportation, Denver, Colorado* (Chap. 8)

Harold G. Tufty, CVS, FSAVE *Editor and Publisher,* Value Engineering and Management Digest, *Washington, D.C.* (Chap. 10)

S. C. (Trever) Wang, Ph.D., P.E. *Senior Engineer, Colorado Department of Transportation, Denver, Colorado* (Chap. 8)

C. Paul Watson, P.E. *Formerly, State Electrical Engineer, Alabama Department of Transportation, Montgomery, Alabama* (Chap. 7)

Kevin E. White, P.E. *Principal Hydraulic Engineer, E. L. Robinson Engineering, Columbus, Ohio* (Chap. 5)

www.EngineeringEBooksPdf.com

PREFACE TO THE THIRD EDITION

Improvements in highway design methods and practices are reflected in this Third Edition of the handbook. The chapter on environmental issues has been updated throughout in view of ever-evolving regulations in that area. The chapter on highway design includes information from the latest AASHTO "Green Book." The trend to replace bridges with spans up to about 60 ft (18 m) with stiffened special long-span corrugated steel and precast concrete drainage structures is documented in the chapter on culverts. The chapter on safety systems shows the trend to use median barriers over wider median widths than in the past. Metric units have been added throughout the text and in tables and figures wherever feasible.

The reader is cautioned that independent professional judgment must be exercised when information set forth in this handbook is applied. Anyone making use of this information assumes all liability arising from such use. Readers are encouraged to use the latest edition of referenced specifications and guides, because they provide more complete information and are subject to frequent change.

Roger L. Brockenbrough, P.E.

www.EngineeringEBooksPdf.com

PREFACE TO THE SECOND EDITION

This new edition of the handbook has been updated throughout to reflect continuing changes and improvements in design trends and specifications. The chapter on bridge engineering has been revised to provide more comprehensive treatment of this important topic. The chapter on culverts and drainage provides updated hydraulic design information as well as the latest approved methods for the structural design of concrete, steel, and plastic pipes. The chapter on retaining walls has been expanded with new information on mechanically stabilized earth walls, including a section on bridge abutment walls. Significant new information has been added to the chapter on value engineering to reflect the current roles of the Federal Highway Administration (FHWA) and the American Association of State Highway and Transportation Engineers (AASHTO); additional examples of applications have been included, too.

Regrettably, this edition of the handbook marks the passing of Kenneth Boedecker, a friend and colleague active in highway engineering applications for many years. His contributions, particularly in the development of improved specifications for drainage pipe and other products, are gratefully acknowledged.

Finally, the reader is cautioned that independent professional judgment must be exercised when information set forth in this handbook is applied. Anyone making use of this information assumes all liability arising from such use. Readers are encouraged to use the latest edition of the referenced specifications, because they provide more complete information and are subject to frequent change.

Roger L. Brockenbrough, P.E.

www.EngineeringEBooksPdf.com

PREFACE TO THE FIRST EDITION

The *Highway Engineering Handbook* has been developed by knowledgeable engineers to serve as a comprehensive reference source for those involved in highway design. This handbook is broad in scope, presenting information on topics ranging from environmental issues to value engineering, from the design of culverts, lighting, and noise walls to the design of safety systems, retaining walls, and bridges. In addition, such fundamental subjects as location and pavement design are fully discussed.

This volume should be useful to a wide range of personnel involved in highway design and construction, including consulting engineers; engineers employed by departments of transportation in federal, state, and local governments; those involved with turnpike authorities; and engineering educators. Both experienced practitioners and serious students will find the information presented here useful and easy to apply. It should enable the engineer to create a design that fulfills the requirements of the highway user: a safe, smooth, durable, aesthetically pleasing, environmentally sensitive, and economical highway system.

Contributors to this handbook are experienced highway engineers, consultants, or educators. They are leading authorities in their subject areas. The guiding principle of this book is to present practical information that has direct application to situations encountered in the field. Efforts were made to coordinate the information with that of the American Association of State Highway and Transportation Officials (AASHTO). Metric units are used where feasible to ease the transition to that system.

The material in this book follows a logical sequence. It begins with a discussion of environmental issues, a fundamental consideration in modern highway design. This is followed by a chapter on location, design, and traffic that includes extensive examples of typical standard treatments. A subject critical to building and maintaining durable systems, pavement design and rehabilitation, is then presented. Following this, aspects of bridge engineering are discussed to aid in the selection of bridge type and material for a durable design. The essentials of culvert design are then offered, as well as information on the various culvert types available. Next, a discussion of roadway safety addresses the latest options for providing for errant vehicles that leave the traveled way. A wealth of information follows on signing and lighting highways, subjects that also are closely related to highway safety. A comprehensive chapter next addresses the selection and design of retaining walls and considers both generic and proprietary systems. Walls to reduce traffic noise and screen unsightly areas are then considered. Finally, a chapter on value engineering and life cycle cost presents fundamental insights into these areas, as well as application examples, to encourage cost-effective design.

The contributors and editors are indebted to their colleagues and a variety of sources for the information presented. Credit is given in references throughout the text to the extent feasible.

The reader is cautioned that independent professional judgment must be exercised when information given in this handbook is applied. Anyone making use of this information assumes all liability arising from such use.

Roger L. Brockenbrough, P.E.
Kenneth J. Boedecker, Jr., P.E.

www.EngineeringEBooksPdf.com

FACTORS FOR CONVERSION TO SI UNITS OF MEASUREMENT

Multiply	By	To find
Length:		
Inches (in)	25.400	Millimeters (mm)
Feet (ft)	0.3048	Meters (m)
Yards (yd)	0.9144	Meters (m)
Miles (mi)	1.6093	Kilometers (km)
Area:		
Square inches (in^2)	645.16	Square millimeters (mm^2)
Square feet (ft^2)	0.09290	Square meters (m^2)
Square yards (yd^2)	0.8361	Square meters (m^2)
Square miles (mi^2)	2.5900	Square kilometers (km^2)
Acres (ac)	0.4047	Hectares (ha)
Mass:		
Ounces (oz)	28.350	Grams (g)
Pounds (lb)	0.4536	Kilograms (kg)
Tons, short (T)	0.9072	Megagrams (Mg), or tonnes
Volume:		
Ounces, fluid (oz)	29.574	Milliliters (mL)
Gallons (gal)	3.7854	Liters (L)
Cubic feet (ft^3)	0.02832	Cubic meters (m^3)
Cubic yards (yd^3)	0.07646	Cubic meters (m^3)
Velocity:		
Miles per hour (mi/h)	1.6093	Kilometers per hour (km/h)
Force:		
Pound (lb)	4.4482	Newton (N)
Kip	4.4482	Kilonewton (kN)
Stress:		
Pounds per square inch (lb/in^2)	6.8948	Kilopascal (kPa)
Kips per square inch ($kips/in^2$)	6.8948	Megapascal (MPa)
Kips per square foot ($kips/ft^2$)	47.880	Kilopascal (kPa)

www.EngineeringEBooksPdf.com

CHAPTER 1
ENVIRONMENTAL ISSUES

James R. Brown
National Director
Transportation Environmental Programs
HDR Engineering, Inc.
New York, New York

Samuel Less, AICP
Planning Director
Transportation Environmental Programs
HDR Engineering, Inc.
New York, New York

Environmental concerns play a major role in the planning, design, construction, rehabilitation, and maintenance of highways. This chapter provides an overview of the major environmental concerns affecting highway projects and includes a summary of the federal environmental statutes, regulations, policies, and guidance material that must be addressed in their development.

Included is a detailed discussion of the requirements of the National Environmental Policy Act of 1969 (NEPA), 42 USC §4321 et seq., the key federal environmental statute affecting the development of highway projects. Provided is a thorough description of the process and substance required to prepare environmental documents under NEPA, including environmental assessments (EA) and environmental impact statements (EIS).

This chapter also includes a summary of the U.S. Department of Transportation (DOT) requirements governing the planning and development of highway projects included in the Safe, Accountable, Flexible, Efficient, Transportation Equity Act—A Legacy for Users (Public Law 109-59, "SAFETEA-LU"), and Section 4(f) of the Department of Transportation Act of 1966 (Title 49 USC §1653(f), "Section 4(f)"). Also provided is an overview of the major federal resource-specific environmental legislation and regulations not under the jurisdiction of DOT that highway planners and engineers must address during project development.

The chapter concludes with a thorough discussion of alternative means to remove lead-based paint from steel bridge structure, and the potential use of waste material in the construction and maintenance of highways, including the recycling of hazardous wastes within highway projects.

www.EngineeringEBooksPdf.com

1.1 ENVIRONMENTAL ISSUES AFFECTING HIGHWAY PROJECTS

Highway projects have the potential to result in significant social, environmental, and economic effects and, as a consequence, are the subject of a broad range of environmental regulation. Potential impacts include effects on

- Community cohesion
- Land use
- Minority and disadvantaged populations
- Surface and groundwaters
- Wetlands
- Coastal zone resources
- Navigable waters
- Wild, scenic, and recreational rivers
- Flood plains
- Water quality
- Important ecological resources, including wetlands and threatened and endangered species
- Significant historic and archaeological resources
- Important visual resources
- Public parklands
- Utilities
- Prime agricultural lands
- Air quality
- Noise
- Energy
- Exposure to contaminated and hazardous materials
- Public health

Recent court rulings also suggest the need to consider potential effects on global climate change and related ecological impacts.

The impacts of highway projects may be both temporary (short-term effects that occur during construction of a facility) and permanent (long-term effects resulting from the operation of a facility). Both short- and long-term impacts can be direct, indirect, or cumulative.

- *Direct impacts* are effects directly caused by an action that occur at the same time and place and result from the direct use of land or resources.
- *Indirect impacts* are effects indirectly caused by an action and are later in time or farther removed in distance from the location of a facility, but which are still reasonably foreseeable, including growth inducing effects and other effects related to induced changes in the pattern of land use, population density, or growth rate.
- *Cumulative impacts* are impacts which result from the incremental impact of an action when added to other past, present, and reasonably foreseeable future actions regardless

www.EngineeringEBooksPdf.com

of what agency or person undertakes such other actions. Cumulative impacts can result from individually minor but collectively significant actions taking place over a period of time.

All of these effects must be considered in evaluating the environmental impacts of highway projects.

1.2 FEDERAL REQUIREMENTS GOVERNING TRANSPORTATION PLANNING AND THE ENVIRONMENT

The following discussion is intended to provide an overview of the principal federal requirements affecting the development and maintenance of highways. These include federal laws, regulations, executive orders, agency advisories, policy memoranda, and guidance documents. Federal laws are enacted legislation that establish a set of rules or principles codified in the United States Code (USC). Federal regulations implement federal laws and are codified in the Code of Federal Regulations (CFR). DOT and Council on Environmental Quality (CEQ) regulations implementing NEPA are codified in 23 CFR Part 771 (*United States Department of Transportation Environmental Impact and Related Procedures*), and 40 CFR Parts 1500–1508 (*Council on Environmental Quality Regulations Implementing NEPA*). Environmental regulations have been promulgated by each federal agency. These include regulations promulgated by DOT, the U.S. Environmental Protection Agency (EPA), the U.S. Department of the Interior (USDOI), the U.S. Army Corps of Engineers (USACOE), and the U.S. Coast Guard (USCG), and can be found in the CFRs of the specific agency having jurisdiction over the environmental issue of concern.

In addition to NEPA and the resource-specific legislation summarized in Art. 1.3 of this chapter, there are a number of DOT requirements that affect the planning and environmental review of highway projects. These include

- Section 4(f) of the Department of Transportation Act of 1966 (23 USC §303)
- The Intermodal Surface Transportation Act of 1991 (Public Law 102-240)
- The Transportation Equity Act for the 21st Century (Public Law 105-178)
- The Safe, Accountable, Flexible, Efficient Transportation Equity Act: A Legacy for Users (Public Law 109-59, "SAFETEA-LU")
- The National Highway Designation Act of 1995 (Section 29 of USC Title 23)

Provided below are brief descriptions of each of these statutes.

Section 4(f) of the Department of Transportation Act of 1966 (23 USC §303, "Section 4(f)"). Section 4(f) prohibits the administrator of the Federal Highway Administration (FHWA) from approving the use of land from a significant publicly owned park, recreation area, or wildlife and waterfowl refuge, or any significant historic site for transportation purposes unless a determination is made that

- There is no feasible and prudent alternative to the use of land from the property.
- The action includes all possible planning to minimize harm to the property resulting from such use.

www.EngineeringEBooksPdf.com

In addition, supporting information must demonstrate that there are unique problems or unusual factors involved in the use of alternatives that avoid these properties ("Avoidance Alternatives") or that the cost, social, economic, and environmental impacts, or community disruption resulting from such alternatives reach extraordinary magnitudes.

Section 6009(a) of SAFETEA-LU made the first substantive revision to Section 4(f) since its enactment in 1966. This section of SAFETEA-LU attempts to simplify the Section 4(f) process for projects that have only de minimis impacts on resources protected by Section 4(f). Under the new provisions, once DOT determines that a transportation use of a Section 4(f) resource results in a de minimis impact, analysis of avoidance alternatives is waived and the Section 4(f) process is deemed complete. Guidance for determining de minimis impacts to Section 4(f) resources was issued by FHWA and DOT on December 13, 2005. Section 6009(c) of SAFETEA-LU requires DOT to conduct a study and issue a report on the implementation of these new Section 4(f) provisions. The initial study and report is to address the first 3 years of its implementation.

Intermodal Surface Transportation Efficiency Act of 1991 (Public Law 102-240, "ISTEA"). ISTEA was almost revolutionary in the breadth of how it looked at surface transportation, and the substantive role it played in regard to metropolitan planning organizations, localities, and states. Covering the period 1992 through 1997, it restructured the Federal Aid Highway Program, and placed the emphasis on maintenance rather than wholesale expansion of the highway network. In creating the Surface Transportation Program, ISTEA brought a new level of flexibility to the planning and implementation of highway and transit projects.

The Transportation Equity Act for the 21st Century (Public Law 105-178, "TEA-21"). Enacted on June 9, 1998, TEA-21 authorized the Federal Surface Transportation Program for highways, highway safety, and transit for the 6-year period, 1998–2003, and increased the authorized funding level to $218 billion from $155 million under ISTEA. TEA-21 built upon ISTEA, allowing new initiatives, strengthening safety, and encouraging flexibility in how to maximize performance of the transportation system.

The Safe, Accountable, Flexible, Efficient Transportation Equity Act: A Legacy for Users of 2005 (Public Law 109-59, "SAFETEA-LU"). SAFETEA-LU built upon both ISTEA and TEA-21 included expanded programs in the areas of safety, equity, innovative financing, congestion relief, mobility and productivity, efficiency, and environmental stewardship. Of particular relevance to the consideration of environmental concerns affecting the development and implementation of highway projects, it included a number of changes aimed at streamlining the environmental review process. A new category of "participating agencies" was added to provide state, local, and tribal agencies with a formal role in the environmental review process, required that a schedule be defined for the participation of agencies in the project review process, established a 180-day statute of limitations for lawsuits challenging federal agency approvals, allowed for broader state assumption of responsibilities for categorical exclusions from environmental review, exempted the Interstate System from Section 4(f) and National Historic Preservation Act requirements (although individual segments may receive protection), modified the requirements for determining whether the conformity of local and statewide transportation plans conform to the Federal Clean Air Act, and, as previously discussed, included tightly circumscribed exemptions from "Section 4(f)" requirements.

National Highway System Designation Act of 1995 (Public Law 104-59, Section 109 of Title 23, USC). Following the substantial completion of the Interstate System, the transportation focus for many states shifted to congestion management and system preservation

www.EngineeringEBooksPdf.com

projects that involve existing facilities. Working with community stakeholders to preserve and enhance the human and natural environment is a significant component of these projects. To address the challenges resulting from this new emphasis, many state transportation agencies and professional organizations have implemented a "context-sensitive design" (CSD) approach to project development.

The National Highway System Designation Act (Section 109 of Title 23, USC) was enacted in November 1995. The act indicated that design for new construction, reconstruction, resurfacing, restoration, or rehabilitation of highways on the National Highway System (other than a highway also on the Interstate System) may take into account

- The constructed and natural environment of the area
- The environmental, scenic, aesthetic, historic, community, and preservation impacts of the activity
- Access for other modes of transportation

Five pilot states (Connecticut, Kentucky, Maryland, Minnesota, and Utah) were selected to implement the CSD approach to highway design. Principles for CSD can be found on the FHWA website at www.fhwa.got.gov/csd/principles.

1.3 NATIONAL ENVIRONMENTAL POLICY ACT OF 1969 (NEPA)

NEPA is the most important federal environmental legislation to be considered in the planning and development of highway projects. NEPA was enacted by Congress in December 1969 and signed into law by President Nixon on January 1, 1970. It was the first comprehensive environmental law in the United States and established the country's national environmental policies. To implement these policies, NEPA requires federal agencies to assess the environmental effects of its discretionary actions prior to making decisions on such actions. Actions subject to NEPA include such activities as the financing or approving of projects or programs; the adoption of agency regulations and procedures; the permitting of private and public actions; and a broad range of other actions.

As indicated in Section 101 of NEPA, its purpose is "to declare a national policy which will encourage productive and enjoyable harmony between man and his environment; to promote efforts which will prevent or eliminate damage to the environment and biosphere and stimulate the health and welfare of man; to enrich the understanding of the ecological systems and natural resources important to the Nation; and to establish a Council on Environmental Quality (CEQ)", within the executive office of the president.

In addition to the agency specific regulations implementing NEPA, DOT and its constituent agencies have identified the process and methods to be used to assess environmental impacts under NEPA in a number of orders, technical advisories, and memoranda. These include Order 5610.1C, *Procedures for Considering Environmental Impacts* (9/18/1979), which established procedures for consideration of environmental impacts in decision making on proposed DOT actions. A draft revision to this order has been considered by DOT (Draft Order 5610.1D, 7/5/2000), but has not been finalized. Further guidance for preparing environmental documents under NEPA is provided in FHWA Technical Advisory T6640.8A, *Guidance for Preparing and Processing Environmental and Section 4(f) Documents* (10/30/1987), the *Federal Aid Policy Guide* (FAPG), and a number of FHWA Policy Memoranda (see Table 1.1).

www.EngineeringEBooksPdf.com

TABLE 1.1 FHWA Office of Planning, Environment, and Real Estate—Selected Policy Memoranda

Issued date	Subject
8/17/06	Guidance on 23 USC §328 Environmental Restoration and Pollution Abatement
7/31/06	Memorandum on Improvement of NEPA Documents
5/25/06	Highway Traffic Noise
4/4/06	Section 6004: State Assumption of Responsibility for Categorical Exclusions
3/29/06	Transportation Conformity Guidance for Qualitative Hot-Spot Analysis in PM2.5 and PM10 Nonattainment and Maintenance Areas
2/15/06	Release of FHWA Construction Noise Model (FHWA RCNM) Version 1.0
2/14/06	Interim Guidance for Implementing the Transportation Conformity Provisions in the SAFETEA-LU
2/3/06	Interim Guidance for Air Toxic Analysis in NEPA Documents
1/13/06	Guidance for Applying the 4(f) Exemption for the Interstate Highway System
3/10/05	Federal-Aid Eligibility of Wetland and Natural Habitat Mitigation
4/28/99	Guidance on the Congestion Mitigation and Air Quality Improvement (CMAQ) Program under the Transportation Equity Act for the 21st Century (TEA-21)
3/12/97	Eligibility of ISTEA Funds to Mitigate Historic Impacts to Wetlands
10/28/96	NEPA Requirements for Transportation Enhancement Activities
12/15/95	Memorandum of Understanding to Foster the Ecosystem Approach
12/13/95	Use of Private Wetland Mitigation Banks
10/11/95	Highway Noise—The Audible Landscape: A Manual for Highway Noise and Land Use
7/25/95	Participation in Funding for Ecological Mitigation
7/5/95	Use of Private Wetland Mitigation Banks as Compensatory Mitigation for Highway Project Impacts
6/12/95	Highway Traffic Noise Guidance and Policies and Written Noise Policies
2/3/95	Analyzing Exempt Projects in the Conformity Process
11/8/94	Federal Interagency Memorandum of Understanding (MOU) for Implementation of the Endangered Species Act (ESA)
8/22/94	Interim Guidance of Applying Section 4(f) on Transportation Enhancement Projects and National Recreational Trails Projects
4/19/94	Wetland Delineation and Mitigation

Additional guidance is provided in common law resulting from litigation concerning environmental matters. Judicial review may result in clarification or invalidation of all or parts of environmental regulation. There is an extensive body of law that has resulted from such review.

1.3.1 The Environmental Impact Assessment Process under NEPA

An outline of the steps in the NEPA process is presented in the following discussion and illustrated in Fig. 1.1.

Determination of the Level of Documentation Needed to Comply with NEPA. Highway projects are usually initiated by a state or local transportation agency. If it is anticipated that a major federal action is required to implement a project, it must comply with NEPA. Conversely, projects that do not require a major federal action do not require review under NEPA. These minor actions include projects that are "categorically excluded" from detailed review under NEPA and for which a minimal level of environmental documentation is required. A list of categorical exclusions is provided

www.EngineeringEBooksPdf.com

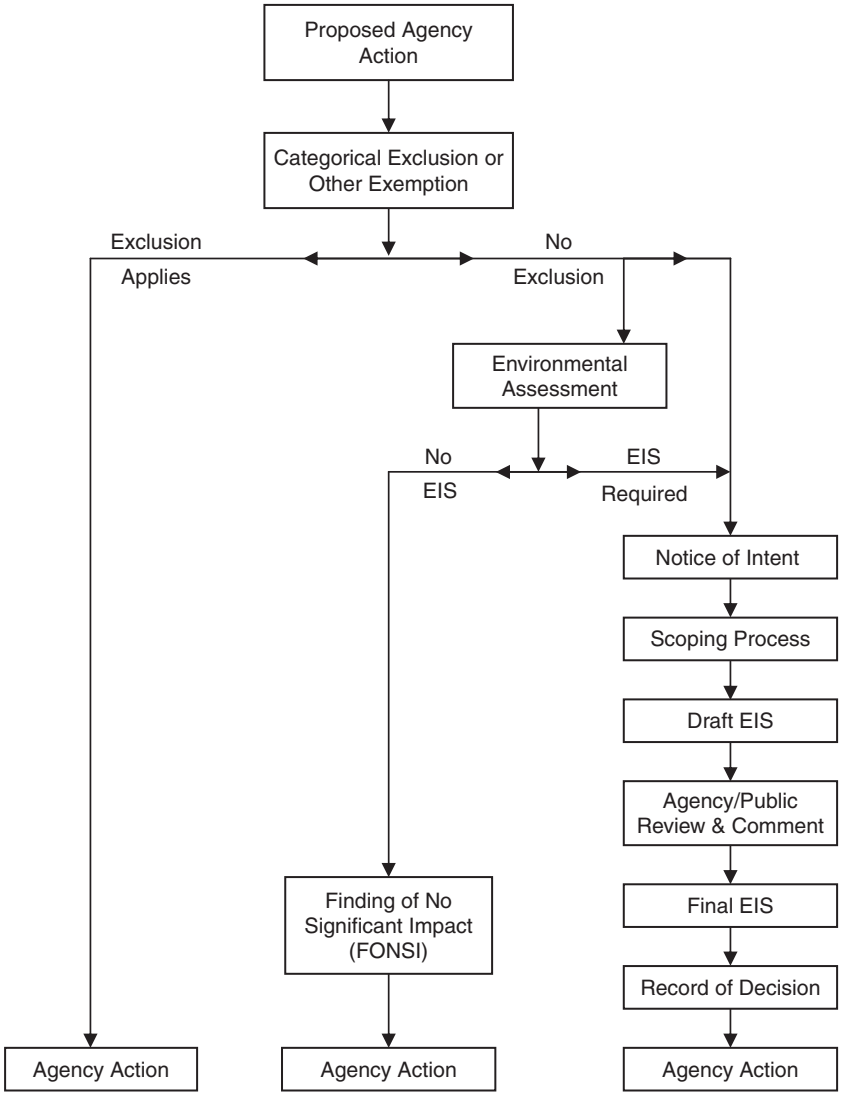

FIGURE 1.1 Overview of NEPA environmental review process. (*From R. E. Bass and A. I. Herson,* Mastering NEPA: A Step-by-Step Approach, *Solano Press Books, Point Arena, Calif., 1993, with permission*)

in Tables 1.2 and 1.3. The following are examples of actions that would trigger the need to comply with NEPA.

- The proposed use of federal funds for the planning, engineering, or construction of a project, or for needed right-of-way acquisition
- Modifications to an existing interstate highway
- Modifications to a non-interstate access-controlled highway that affects the right-of-way previously financed with federal funds

www.EngineeringEBooksPdf.com

TABLE 1.2 Actions Categorically Excluded from Further Review by FHWA

1. Activities that do not involve or lead directly to construction
2. Approval of utility installations along or across a transportation facility
3. Construction of bicycle and pedestrian lanes, paths, and facilities
4. Activities included in the state's highway safety plan under 23 USC §402
5. Transfer of federal lands pursuant to 23 USC §317 when the subsequent action is not an FHWA action
6. Installation of noise barriers or alterations to existing publicly owned buildings to provide for noise reduction
7. Landscaping
8. Installation of fencing, signs, pavement markings, small passenger shelters, traffic signals, and railroad warning devices where no substantial land acquisition or traffic disruption will occur
9. Emergency repairs under 23 USC §125
10. Acquisition of scenic easements
11. Determination of payback under 23 CFR §480 for property previously acquired with federal-aid participation
12. Improvements to existing rest areas and truck-weigh stations
13. Ride-sharing activities
14. Bus and railcar rehabilitation
15. Alterations to facilities or vehicles in order to make them accessible for elderly and handicapped persons
16. Program administration, technical assistance activities, and operating assistance to transit authorities to continue existing service or increase service to meet routine changes in demand.
17. Purchase of vehicles by the applicant where the use of these vehicles can be accommodated by existing facilities or by new facilities which themselves are within a categorical exclusion
18. Track and railbed maintenance and improvements when carried out within the existing right-of-way
19. Purchase and installation of operating or maintenance equipment to be located within the transit facility and with no significant impacts off the site
20. Promulgation of rules, regulations, and directives

Source: Adapted from 23 CFR 771.117(c).

If a project is subject to NEPA, a determination must then be made regarding the level of analysis and process to be completed to comply with NEPA. The type of environmental documentation that is required must be made in consultation with FHWA, which, in turn, coordinates the review of a proposed action with other involved federal agencies. Based on coordination with FHWA, a project could require one of the three levels of environmental documentation:

- Documentation supporting the project status as a *categorical exclusion* (CE).
- Projects for which an *environmental assessment* is required to make a final determination of whether an Environmental Impact Statement is required.
- Projects for which an *environmental impact statement* is required.

www.EngineeringEBooksPdf.com

TABLE 1.3 Actions Generally Excluded from Further NEPA Review But Subject to FHWA Approval

1. Modernization of a highway by resurfacing, restoration, rehabilitation, reconstruction, adding shoulders, or auxiliary lanes
2. Highway safety or traffic operations improvement projects, including the installation of ramp-metering control devices and lighting
3. Bridge rehabilitation, reconstruction, or replacement or the construction of grade separation to replace existing at-grade railroad crossings
4. Transportation corridor fringe parking facilities
5. Construction of new truck weigh stations or rest areas
6. Approvals for disposal of excess right-of-way or for joint or limited use of right-of-way, where the proposed use does not have significant adverse impacts
7. Approvals for changes in access control
8. Construction of new bus storage and maintenance facilities in areas used predominately for industrial or transportation purposes where such construction is not inconsistent with existing zoning and located on or near a street with adequate capacity to handle anticipated bus and support vehicle traffic
9. Rehabilitation or reconstruction of existing rail and bus buildings and ancillary facilities where only minor amounts of additional land are required and there is not a substantial increase in the number of users
10. Construction of bus-transfer facilities (an open area consisting of passenger shelters, boarding areas, kiosks, and related street improvements) when located in a commercial area or other high-activity center in which there is adequate street capacity for projected bus traffic
11. Construction of rail storage and maintenance facilities in areas used predominatly for industrial or transportation purposes where such construction is not inconsistent with existing zoning and where there is no significant noise impact on the surrounding community
12. Acquisition of land for hardship or protective purposes

Source: Adapted from 23 CFR 771.117(d).

A determination of the extent of environmental documentation is based on a preliminary environmental evaluation of a proposed action to determine whether:

- The proposed action falls within the definitions of projects that are categorically excluded from NEPA review.
- The proposed action has the potential to result in one or more significant environmental impacts.
- Measures are reasonably available that could mitigate potential environmental effects thereby eliminating the potential for significant environmental impacts.
- The project has unusual level of public controversy that may warrant preparation of an EIS.

Categorical Exclusions. CEQ regulations implementing NEPA (40 CFR 1508.4) require that each federal agency identify the types of actions under its purview that would not individually or cumulatively result in significant environmental impacts. These projects, designated as categorical exclusions, are exempt from the need to prepare an EA or EIS.

FHWA has identified two sets of projects that may be categorically excluded from detailed review under NEPA. The first group of actions is found in 23 CFR 771.117(c) and

www.EngineeringEBooksPdf.com

is provided in Table 1.2. These are actions that have been categorically found not to result in significant adverse environmental impacts. The second group of actions is found in 23 CFR 771.117(d) and is provided in Table 1.3. These include actions that have been found generally not to result in significant adverse environmental impacts, but for which FHWA must make a final determination.

When satisfied that the project meets one or more exclusion criteria and that other environmentally related requirements have been met, FHWA will indicate approval by signing a Categorical Exclusion form. A copy of documentation required to support this determination must be sent to FHWA by the sponsoring agency.

In certain cases, FHWA has reached agreement with sponsoring agencies on the treatment of very routine, repetitive projects with little or no environmental impact implications. Such projects may be processed on the basis of a "programmatic" categorical exclusion if certain specified conditions are met. Use of this programmatic process is subject to annual review by FHWA.

Classification of a project as a categorical exclusion does not exclude a project from the requirements of other federal environmentally related processes. These requirements must be met before FHWA will make an exclusion determination. In addition, Congress may, at its discretion, also exempt a specific federal project or program from NEPA through specific legislation.

Environmental Assessments. An EA is conducted for projects that are not categorically excluded and for which it is not clear whether an EIS is required. The primary purpose of an EA is to help FHWA decide whether an EIS is needed. Consequently, an EA should provide the evaluations critical to determining whether a proposed action would result in a significant impact on one or more of the environmental resources considered under NEPA, thereby necessitating a more complete analysis in an EIS. If it is determined that a proposed action does not have the potential to result in one or more significant environmental impacts, then FHWA will issue a Finding of No Significant Impact (FONSI), thereby terminating the environmental review process under NEPA. If it is determined that a proposed action has the potential to result in one or more significant impacts, then FHWA has the option to require that an EIS be prepared.

Contents and Format of an EA. The contents of an EA are determined through agency and public scoping, preliminary data gathering, and field investigation. These steps will identify potentially affected resources and the level of analysis that is necessary to identify whether an action would have the potential to result in a significant environmental impact.

The EA should be a concise document, including only the data and technical analyses needed to support decision making, and be focused on determining whether the proposed action would have a significant effect on the environment. It is not necessary to provide detailed assessments of those resources for which significant environmental impacts are very unlikely.

In addition to a cover sheet and table of contents, the following elements should be included in an EA:

- Purpose and need for the proposed action
- Project description and alternatives
- Environmental setting, impacts, and mitigation
- Comments and coordination
- Appendices (as necessary)

www.EngineeringEBooksPdf.com

- Section 4(f) evaluation (if required)
- EA revisions (if required)

Purpose and Need for the Proposed Action. A succinct description of the purpose and need for the proposed action should be provided at the beginning of the EA. The need for the project should be based on an objective evaluation of current information and future anticipated conditions. This section of the EA should identify the transportation problem(s) or other needs which the proposed action is intended to address (40 CFR 1502.13). The section should clearly demonstrate that a need exists and should define the need in terms understandable to the general public. The statement of purpose and need will form the basis for identifying of reasonable alternatives and in selecting a preferred alternative.

Consistent with joint FHWA and Federal Transit Administration (FTA) guidance (*July 23, 2003 Joint Memorandum from Mary E. Peters, administrator of FHWA and Jennifer L. Dorn, administrator of FTA*), the Purpose and Need Statement must be as concise and understandable as possible. Although it serves as the cornerstone for the subsequent identification and evaluation of alternatives, it should not specifically discuss any alternative or range of alternatives, nor should it be so narrowly drafted that it unreasonably points to a single solution, thereby circumventing necessary environmental review before a selection is made. In general, the "need" for an action should be defined as the transportation system deficiencies that will be addressed by the action, while the "purpose" for the action should be described as the objectives that will be met to address the deficiencies. Table 1.4 identifies the types of information that could be incorporated into the EA to demonstrate the need for a proposed action.

Project Description and Alternatives. Included in this section of the EA should be a project description written in clear, nontechnical language. It should include the location and geographic limits of the project and its major design features and typical sections; a location map (district, regional, county, or city map depicting state highways, major roads, and well-known features to orient the reader to the project location); a vicinity map

TABLE 1.4 Information to Establish Need for Highway Projects

Project status: Briefly describe the project history including actions taken to date, other agencies and governmental units involved, action spending, schedules, etc.
System linkage: Is the proposed project needed as a "connecting link"? How does the project fit in the transportation system?
Capacity: Is the capacity of an existing facility inadequate for the present and projected traffic? Would the proposed project provide needed additional capacity? What is the level(s) of service for existing and proposed facilities?
Transportation demand: Is the project identified in an adopted statewide or metropolitan transportation plan as needed to meet current or projected demand?
Legislation: Is there a federal, state or local governmental mandate for the action?
Social demands or economic development: Is the project needed to address projected economic development or changes in land use?
Modal interrelationships: Is the proposed project needed to interface with and complement airports, rail and port facilities, or mass transit services?
Safety: Is the proposed project needed to correct an existing or potential safety hazard? Is the existing accident rate excessively high compared to that of similar facilities in the region or state?
Roadway deficiencies: Is the proposed project needed to correct existing roadway deficiencies (e.g., substandard geometrics, load limits on structures, inadequate cross-section, or high maintenance costs)?

www.EngineeringEBooksPdf.com

(detailed map showing project limits and adjacent facilities); current status of the project including its relation to regional transportation plans, regional transportation improvement programs, congestion management plans, and the state transportation improvement program; proposed construction date; funding source(s); and the status of other projects or proposals in the area. For projects that include more than one type of improvement, the major design features of each type of improvement should be included.

The description of the project should clearly indicate the independence of the action by

- Identifying and providing the basis for establishing the "logical termini" (project limits) of the action
- Establishing the separate utility of the action from other actions of the agency
- Establishing that the action does not foreclose the opportunity to consider other actions
- Confirming that the action does not irretrievably commit federal funds for closely related projects

Reasonable alternatives to the project should be discussed, including consideration of a no-action option, which is mandated under both CEQ and FHWA regulations. The EA may either discuss (1) the preferred alternative and identify any other alternatives considered or (2) if a preferred alternative has not been identified during previous planning studies, the alternatives under consideration. The EA does not need to evaluate in detail all reasonable alternatives for the project, and may be prepared for one or more build alternatives.

Project alternatives can be classified into two types: viable, and those studied but no longer under consideration. Viable alternatives should be described in sufficient detail to compare their effectiveness against the proposal in meeting the project purpose and need, and to assess potential impacts and estimate cost. Alternatives no longer under consideration should be explained briefly and the reasons provided for their elimination.

Environmental Setting, Impacts, and Mitigation. The EA should include a description of the environmental setting in which the proposed action would be located. The description should be succinct and maximize the use of visual displays to reduce the need for extensive narrative. Beyond a general description of contextual background, the discussion should focus on those features that have the greatest potential to be significantly affected by the proposed action.

The EA should discuss any social, economic, and environmental impacts whose significance is uncertain. The level of analysis should be sufficient to adequately identify the impacts and available measures to mitigate impacts, and to address known and foreseeable public and agency concerns. Impact areas that do not have a reasonable possibility for individual or cumulative environmental impacts need not be addressed. The reasons for determining why any impacts are not considered to be significant should be provided.

If more than one alternative is involved, the evaluation must identify the impacts associated with each alternative being evaluated. The EA should identify the technical studies and backup reports used in making the assessment and indicate where they are available. A list of environmental resource categories to be considered in both EAs and EISs is included in Table 1.5.

Feasible measures that reduce or eliminate potential impacts of a proposed action should be identified. Measures may be presented as potential commitments that may be selected for implementation by the lead agency. Alternatively, these measures can be incorporated as elements of the proposed action, thus avoiding impacts. Measures to mitigate impacts may diminish the intensity of project effects to the point that they would not be considered to be significant, and could make the project eligible for a FONSI.

Based on the results of these evaluations, a determination is made of whether the anticipated effects of the project represent a significant environmental impact thereby requiring

www.EngineeringEBooksPdf.com

TABLE 1.5 Environmental Resource Categories to Be Considered in the Preparation of Environmental Assessments and Environmental Impact Statements

1. Land use impacts
2. Farmland impacts
3. Socioeconomic impacts, including disproportionate adverse impacts on disadvantaged and minority populations (environmental justice)
4. Relocation impacts
5. Considerations relating to pedestrians and bicyclists
6. Air quality impacts
7. Noise impacts
8. Water quality impacts
9. Wetland impacts
10. Water body modification and wildlife impacts
11. Floodplain impacts
12. Wild and scenic rivers
13. Coastal barriers
14. Coastal zone impacts
15. Threatened or endangered species
16. Historic and archeological preservation
17. Hazardous waste sites
18. Visual impacts
19. Energy
20. Construction impacts
21. Relationship of local short-term uses vs. long-term productivity
22. Irreversible and irretrievable commitment of resources
23. Cumulative impacts

the preparation of an EIS. This determination is based on a review of the *context* and *intensity* of the impact. *Context* refers to the setting within which the proposed project is being developed. *Intensity* refers to the severity of an impact and will vary by resource type.

Factors to consider in determining intensity of an impact include

- The degree to which the action may affect public health or safety.
- The degree to which the effects on the quality of the human environment may result in a significant level of public controversy.
- Whether the action may result in cumulatively significant impacts when added to the effects of other planned and programmed projects and activities separate from the proposed action.
- Whether the action has the potential to violate one or more federal, state, or local laws or standards intended to protect the environment.

Factors to be considered in determining the context include

- Unique characteristics of the geographic area such as proximity to public, park lands, prime farmlands, wetlands, wild and scenic rivers, or ecologically critical areas.

www.EngineeringEBooksPdf.com

- The degree to which the action may adversely affect districts, sites, highways, structures, or objects listed on or eligible for listing on the National Register of Historic Places.
- The degree to which the action may adversely affect threatened or endangered species of their habitat that has been determined to be critical under the Endangered Species Act of 1973.

Comments and Coordination. Determination of the need for an EIS or whether the FHWA can issue a FONSI can only be made after the EA has been made available for agency and public review. This section of the EA should summarize the efforts taken to coordinate with agencies and the public, identify the key issues and pertinent information received through these efforts, and list the agencies and members of the public consulted.

Public involvement is an essential element of the NEPA process, and the proposing agency must take proactive steps to encourage and provide for early and continuing public participation in the decision-making process [40 CFR 1506(a)]. Opportunities for public involvement are provided at several stages during the development of NEPA documents, such as at the publication of the notice of intent (NOI) to prepare an EIS, during the process used to scope the environmental document, and during the process afforded to agencies and the public to review the environmental document.

Opportunity for the public to review and comment on the completed (draft) EA occurs upon publication of a notice of availability of the draft document. Such notice may be published in local newspapers or other local print media, presented in special newsletters, provided to community and business associations, placed in legal postings, and presented to interested Native American tribes, if appropriate. For an EIS, publication of such notice is also required in the *Federal Register.* Notices and other public announcements regarding the project should be sent individually to those who have expressed an interest in a specific action.

Early incorporation of public input on project alternatives and issues dealing with social, economic, and environmental impacts helps in deciding whether to prepare an EIS, in determining the scope of the document, and in identifying important or controversial issues to be considered. When impacts involve the relocation of individuals, groups, or institutions, special notification and public participation efforts should be undertaken. Early and ongoing public involvement will assist in gaining consensus on the need for the action and in identifying and screening alternatives.

A public hearing is not mandated to receive comment on an EA but is required for public review of a draft EIS. The proposing agency must provide for one or more public hearings to be held at a convenient time and place for federal actions that require significant amounts of right-of-way acquisition, substantially change the layout or function of connecting roadways or of the facility being improved, have substantial adverse impact on abutting properties, or otherwise have a significant social, economic, or environmental effect [23 CFR 771.111(h)(2)(iii)].

During public hearings, the public should be provided with information on the project's purpose and need and with how the project relates to local and regional planning goals, the major design features of the project, its potential impacts, and the reasonable alternatives under consideration including the no-action alternative. Areas of special interest to the public, such as needed right-of-way acquisition and the proposed displacement and relocation of existing uses, should be carefully explained, as should the agency's procedures and timing for receiving oral and written public comments [23 CFR 771.111(h)(2)(v)]. The public comment period for a draft EIS is at least 45 days. All public comments received during the public comment period, including during public hearings must be documented.

Appendices (if any). Appendices to the EA should include the analytical information that substantiates the principal analyses and findings included in the main body of the document.

www.EngineeringEBooksPdf.com

Section 4(f) Evaluation (if any). As described in Art. 1.2 of this chapter, a Section 4(f) evaluation may be required if a project would require the use of land from a significant publicly owned public park, recreation area, or wildlife and waterfowl refuge, or any significant historic site. If a Section 4(f) evaluation is required, it may be included as a section within the EA. If included within the EA, a separate "avoidance alternatives evaluation" need not be repeated in the EA. In all cases, the Section 4(f) evaluation must be circulated for review in conformance with 23 CFR 771.135(i) requirements.

EA Revisions. An EA should be revised subsequent to public review to (1) reflect changes in the proposed action, impact assessment, or mitigation measures resulting from comments received on the EA, (2) include any necessary findings, agreements, or determinations made as a consequence of the concurrent reviews under Section 4(f) or other regulatory requirements, and (3) include a copy of pertinent substantive comments received on the EA and appropriate responses to the comments.

Finding of No Significant Impact. After review of the EA and any other appropriate information, the FHWA may determine that the proposed action would not result in any significant impacts, and issue a FONSI. The FONSI should briefly present the reasons why the proposed action would not have a significant effect on the human environment or require the preparation of an EIS. The FONSI should document compliance with NEPA and other applicable environmental requirements. If full compliance with all these other requirements is not possible by the time the FONSI is published, the FONSI should document consultation with the affected agencies to date and describe how and when the other requirements will be met.

There is no requirement to publish a record of decision (ROD) for a FONSI, nor is there a legally mandated requirement to distribute the FONSI. However, the FHWA must send a notice of availability of the FONSI to federal, state, and local government agencies likely to have an interest in the undertaking and the state intergovernmental review contacts [23 DFR 771.121(b)]. It is encouraged that agencies that have comments on the EA (or requested to be informed) be advised on the project decision and the disposition of their comments, and be provided a copy of the FONSI.

Environmental Impact Statement. A federal agency must prepare an EIS if it is proposing a major federal action that would significantly affect the quality of the human environment (40 CFR §1501.7). The regulatory requirements for an EIS are more extensive than the requirements for an EA. The steps to be followed in preparing an EIS are depicted in Fig. 1.1.

Once the lead agency determines that an action would result in a significant measurable impact, development of a draft enviornmental impact statement (DEIS) is initiated through a public and agency notification and scoping process focused on early identification of the major issues of concern and alternatives for study. This process includes confirmation of FHWA as the agency to lead the environmental review process, identification of cooperating agencies, distribution of a letter of initiation of the environmental process from the sponsoring agency, publication of a notice of intent to prepare an EIS, invitation to agencies to become participating agencies in the environmental review process, and completion of scoping activities. Each of these steps is described in the following discussion.

Lead Agency Determination. In accordance with Section 6002 of SAFETEA-LU, DOT is designated as the federal lead agency for the "environmental review process" for any surface transportation project that requires a DOT approval. The environmental review process includes both NEPA and other reviews. The lead agency is responsible for taking actions within its authority to facilitate the resolution of the environmental review process. It also is responsible for preparing the required NEPA document for the

www.EngineeringEBooksPdf.com

project, or ensuring that one is prepared. Other federal agencies that have jurisdiction by law, or that have special expertise with respect to any environmental issue that should be addressed in the EIS may be a cooperating agency upon request of the lead agency. An agency may also request that the lead agency designate it as a cooperating agency. Each cooperating agency must (1) participate in the NEPA process at the earliest possible time, (2) participate in the scoping process described below, (3) assume on request of the lead agency responsibility for developing information and preparing environmental analyses including portions of the EIS concerning issues which the cooperating agency has special expertise, and (4) make staff available to enhance the lead agency's interdisciplinary capability.

Dissemination of Letter of Initiation. In accordance with Section 6002 of SAFETEA-LU, a project sponsor has the responsibility to notify DOT that the environmental review process for a project "should be initiated." This notice of initiation, which can take the form of a letter or other form of notice, should identify the type of work, termini, length, and general location of the project. It should also identify any federal approvals that the project sponsor believes will be necessary, including all anticipated environmental reviews, permits, and consistency determinations.

Publication of Notice of Intent. The EIS process begins with the publication of a notice of intent (NOI) stating the agency's intent to prepare an EIS for the proposed action. The NOI is published in the *Federal Register*, and provides basic information on the proposed action in preparation for a subsequent "scoping process." The NOI should include a description of the purpose and need for the proposed action similar to that included in an EA. In addition, it includes a brief description of the proposed action and possible alternatives, and a description of the process proposed by the sponsoring agency to identify the scope of the EIS. This should include any proposed scoping meetings and other methods proposed for public involvement in the environmental review process. The NOI should also identify the agency point of contact for the project, who can respond to questions concerning the proposed action and the NEPA process. The NOI should emphasize the lead agency's commitment to collaborate with others interested in the proposed action and to describe how it intends to engage interested parties throughout the analysis. The publication of the NOI in the *Federal Register* can be supplemented by issuing other forms of notice such as announcements on websites, newspapers, newsletters, and other forms of media. The format and content of the notice of intent are included in FHWA Technical Advisory T6640.8A.

Invitation to Participating Agencies. In addition to publication of an NOI, Section 6002 of SAFETEA-LU requires that the lead environmental agency designate as "participating agencies" (a new term created under SAFETEA-LU) all other governmental agencies—federal or nonfederal—that may have an interest in the project, and invite them to participate in the environmental review process for the project. Such designation and invitation should occur as early in the environmental review process as is practicable. Any federal agency that is invited to participate in the process must accept the invitation unless that agency notifies the lead agency in writing by the deadline specified in the invitation that (1) it has no jurisdiction or authority over the project, (2) it has no information or expertise relevant to the project, and (3) it does not intend to submit comment on the project.

Section 6002 of SAFETEA-LU further mandates that the lead agency must establish a plan for coordinating public and agency participation in the environmental review process, including for all federal environmental reviews for the project, not just DOT reviews. Optionally, the lead agency may establish a schedule for completion of the environmental review process after consultation with all participating agencies and the state and project sponsor. SAFETEA-LU directs "each federal agency, to the maximum extent practicable," to (1) carry out all reviews required under other laws concurrently with the review required in NEPA, and (2) formulate and implement mechanisms to enable the agency to ensure the

www.EngineeringEBooksPdf.com

completion of the environmental review process in a "timely, coordinated, and environmentally responsible manner."

Scoping. "Scoping" is an early and open process for determining the breadth of issues to be addressed in an EIS, the range of alternatives to be considered, and the methods to be applied in evaluating the effects of an action. The objectives of scoping are to

- Invite the participation of affected federal, state, and local agencies, any affected Indian tribe, and other interested persons (including those who might not be in accord with the action on environmental grounds).
- Identify and eliminate from detailed study the issues that are not significant or that have been covered by prior environmental review.
- Allocate assignments for preparation of the EIS among the lead and cooperating agencies.
- Identify other environmental review and consultation requirements so FHWA and cooperating agencies may prepare other required analyses and studies concurrently with the EIS.
- Indicate the relationship between the timing of the preparation of environmental analyses and the planning and decision-making schedule.

Notification and implementation of scoping is achieved through public agency involvement procedures required by 23 CFR 771.111.

Preparation of the Draft Environmental Impact Statement (DEIS). The principal purpose of the DEIS is to disclose to the decision makers and the public the probable impacts of reasonable alternative that have the potential to meet the purpose and need of a proposed action. Responsible decisions can be then made after public review and comment based on an assessment of the degree to which competing alternatives meet the need for the action and by balancing their relative environmental, social, and economic impacts.

Preparation of the DEIS should begin at the earliest practical time. A key element should be the early exploration of alternatives and their relative ability to meet the purpose and need for the proposed action. This will assist in identification of reasonable alternatives and allow early coordination with cooperating and responsible agencies.

The DEIS should be concise and include succinct statements, evaluations, and descriptions of conclusions. Lengthy, encyclopedic discussions of subject matter diffuse the focus of the document from its analytical purpose. The document should be easily understood by the public and written to emphasize the significant environmental impacts of competing alternatives. Discussions of less significant impacts should be brief, but sufficient to demonstrate that due consideration was given and more detailed study not warranted.

CEQ regulations emphasize brevity and stress the importance of focusing on significant issues and avoiding detailed discussion of less important matters. Normally, EISs should be less than 150 pages, or less than 300 pages if the action is unusual in scope and complexity. Exhibits (charts, tables, maps, and other graphics) are useful in reducing the amount of narrative required. Adequacy of a DEIS is measured by its functional usefulness in decision making, not by its size or amount of detail. This is especially applicable in the executive summary of the document, where items relating to alternatives and their impacts and related mitigation can be presented in a matrix format, thereby minimizing the need for narrative.

Contents and Format of the Draft EIS. In accordance with 40 CFR 1502.10 and FHWA Technical Advisory T6640.8A, an EIS should be prepared in accordance with the following outline unless compelling reasons to do otherwise are given by the proposing agency:

- Cover sheet
- Executive summary

www.EngineeringEBooksPdf.com

- Title page
- Table of contents
- Purpose and need for the proposed action
- Alternatives
- Affected environment
- Environmental consequences
- Mitigation measures
- List of preparers
- List of who received copies
- Appendixes
- Index

Cover Sheet. The cover sheet should clearly indicate the name of the project, its location, date of publication of the DEIS, and the responsible sponsoring and environmental lead and cooperating agencies.

Executive Summary. A summary should be given that provides an overview of the entire DEIS and be no greater than 10 to 15 pages in length. The summary should include the following information:

- Briefly describe the proposed project, including the route, termini, type of facility, number of lanes, length, county, city, and state, along with significant appurtenances, as appropriate.
- List other federal actions required for implementation of the project, including required permits. Also describe other major actions proposed by other governmental agencies in the same geographic area as the proposed project.
- Summarize all reasonable alternatives considered.
- Summarize the major environmental impacts of each alternative, both beneficial and adverse.
- Identify proposed measures to reduce or avoid identified impacts.
- Briefly describe any areas of concern (including issues raised by agencies and the public) including any important unresolved issues.

Title Page. The title page should identify the name of the proposed action, and its geographic limits and location, the date of the DEIS, and any relevant report number identified by the sponsoring agency and FHWA. The proposing agency must be clearly identified, including the name, address, and telephone number of a primary contact person. All agencies that serve as cooperating agencies should also be identified. A brief one paragraph abstract should be included, providing a description of the proposed action and its alternatives, a summary of significant impacts, and major mitigation measures. The title page should also identify the date by which comments on the DEIS must be received.

Table of Contents. A table of contents should be included in the document and consider all areas of concern identified during the scoping process.

Purpose and Need of the Proposed Action. The DEIS should include a description of the purpose and need for the proposed action. The information provided should be similar to that provided in an EA, as described earlier in this chapter.

Alternatives. The lead agency must "objectively evaluate all reasonable alternatives, and for alternatives which were eliminated from detailed study, briefly discuss the

www.EngineeringEBooksPdf.com

reasons for their having been eliminated" (40 CFR §1502.14). Reasonable alternatives are those that substantially meet the purpose and need for the proposed action, and include those that are practical or feasible from the technical and economic standpoint, rather than simply desirable from the standpoint of the applicant or the public. Agencies are obligated to evaluate all reasonable alternatives or a range of reasonable alternatives in enough detail so that a reader can compare and contrast the environmental effects of the various alternatives.

Both improvement of existing highways and facilities on new locations should be considered, as appropriate to the need for the action. A representative number of reasonable alternatives must be presented and evaluated in detail in the DEIS. For most major projects, there is a potential for a large number of reasonable action alternatives. Only a representative number of the most reasonable approaches, covering the full range of alternatives, should be presented. The number of reasonable alternatives will depend on the project location and pertinent project issues. Each alternative should be briefly described using maps or other visual aids such as photographs, drawings, or sketches. A clear description should be presented of the concept, major design features, termini, location, and costs for each alternative. More detailed design of some aspects may be necessary for one or more alternatives to evaluate impacts or mitigation measures, or to address issues raised by other agencies or the public. However, equal consideration must be given to all alternatives. All reasonable alternatives considered should be developed to a comparable level of detail in the draft EIS so that their comparative merits may be evaluated. Where a preferred alternative has been identified, it should be so indicated. The DEIS should include a statement that the final selection of an alternative will not be made until the impacts of the alternatives and public comments on the DEIS have been fully evaluated. Where a preferred alternative has not been identified, the DEIS should state that all reasonable alternatives are under consideration and that a decision will be made only after the impacts of the alternatives and comments on the DEIS have been fully evaluated.

Both CEQ and FHWA regulations implementing NEPA require consideration of a "no-action" alternative. The no-action alternative is the condition that would occur if FHWA did not implement the proposed action, but may be different from the existing condition due to implementation of other actions separate from those of the proposed action if the proposed action was not authorized. For highway projects, the no-action alternative would at least include those reasonably foreseeable maintenance and safety actions required to continue operation of the facility under consideration.

Affected Environment. This section of the DEIS describes in concise terms the social, economic, and environmental setting for the alternatives under consideration. The limits of the study area(s) should be based on an assessment of the extent of potential impact for each impact category. Impact categories should include those listed in Table 1.5. Only aspects of the setting relevant to assessing the environmental impacts of proposed alternatives should be discussed in detail, with other descriptions limited to that necessary to provide context.

Environmental Consequences. The major significant impacts of the project should be discussed in detail in the environmental consequences section for each of the categories for which a description of the affected environment is provided. The analysis of impacts should consider all issues raised during the project's public and agency-scoping process. The analysis must include consideration of the full range of short- and long-term, and direct, indirect, and cumulative effects of the preferred alternative, if any, and of the reasonable alternatives identified in the alternatives section of the DEIS. Effects to be considered include ecological, aesthetic, historic, cultural, economic, social, and public health impacts, whether adverse or beneficial (40 CFR §§1508.7, 1508.8).

Mitigation Measures. This section of the DEIS should specify measures to lessen the adverse environmental impacts of alternatives identified in the environmental consequences

www.EngineeringEBooksPdf.com

section of the DEIS. For an impact mitigation measures to be considered usable it must be effective, economically feasible and the agency must be capable of and committed to implementing the measure. Under CEQ regulations, mitigation can be achieved by avoiding the adverse impact, minimizing the adverse effect by reducing the scope of the project, implementing a program to reduce the impact over time, or compensating for the impact by replacing or providing substitute resources.

List of Preparers. A list should be provided of the names and appropriate qualifications (professional license, academic background, certification, professional working experience, and special expertise) of the persons who were principally responsible for preparing the DEIS or substantial background papers. The list should include any project sponsor, FHWA and consultant personnel who had primary responsibility for preparing or reviewing the DEIS.

DEIS Distribution List. The draft EIS must list the names and addresses of the agencies and organizations that were sent copies of the DEIS for review.

Comments and Coordination. The draft EIS should contain pertinent correspondence summarizing public and agency coordination, meetings, and other pertinent information received.

Glossary and Abbreviations. A glossary and list of abbreviations should be included as an aid to those not familiar with the project development process and technical issues being considered in the DEIS.

References and Bibliography. A clear, concise listing of references and bibliographical material should be included.

Appendices. Appendices should contain the reports and documents that support the findings of the DEIS. Detailed technical discussions and analyses that substantiate the concise statements within the body of the DEIS are most appropriately placed in the appendices. Appendices must either be circulated with the draft EIS or be readily available for public review.

Index. An index to the DEIS should be provided to assist the reader in locating topics of interest.

Public Review and Comment. Upon completion, the DEIS is made available for public review and comment. Review of the DEIS should supplement the public outreach activities to date. A notice of availability of the DEIS should be published in the *Federal Register* and in newspapers of general circulation in the vicinity of the project site. Hard copies of the DEIS should be provided at libraries and other locations in the vicinity of the geographic area that would be potentially affected by the proposed action. Electronic copies of the DEIS and its supporting documentation should also be made available on the website of the sponsoring agency. Provisions should be made for major foreign language populations in the area, including the publication of notices in the language of major non-English speaking populations in the area, and the provision of translators at any public hearings.

The notice of availability of the DEIS should indicate the date by which public comments must be received and the dates, times, and locations of any public hearing(s) on the DEIS. Adequate notice should be provided to any public hearings to allow sufficient time for public examination and assessment of the DEIS. All substantive comments received on the DEIS during the public review period, including all written comments and oral comments received at any public hearing on the DEIS, should be documented and summarized. Responses must be prepared to all substantive comments. Responses to nonsubstantive comments and gratuitous remarks on the DEIS are not required.

Final EIS. Upon completion of the public comment period on the DEIS, an analysis is completed of the comments received, necessary revisions are made to the analyses and

www.EngineeringEBooksPdf.com

TABLE 1.6 Contents of a Final Environmental Impact Statement (FEIS)

Item	Content
Cover sheet	The cover sheet must indicate FEIS.
Executive summary	The executive summary should incorporate any changes between the DEIS and FEIS, identify the preferred alternative, and concisely describe all mitigation measures, including monitoring and enforcement measures for any proposed mitigation measure, where applicable.
Need for action	No revisions from the DEIS unless warranted by comments received on the DEIS.
Alternatives	The preferred alternative should be identified and described in a separate section of the FEIS. A defensible rationale should be provided for selection of the preferred alternative. This rationale must reflect a comparison of the strengths and weaknesses of the various alternatives considered.
Affected environment	No substantive change from that included in the DEIS unless warranted by comments received on the DEIS.
Environmental consequences	No substantive changes unless warranted by comments received on DEIS.
Mitigation and other	The FEIS should identify all mitigation measures.
List of preparers	No substantive change unless comments warrant.
List of who received DEIS	No substantive change unless comments warrant.
Appendixes	No substantive change unless comments warrant.
Index	No substantive change unless comments warrant.
Distribution list	Indicate on the list those entities commenting.
Comments and coordination	This section provides a list of those commenting on the DEIS, including copies of comments received and responses to all substantive comments.

conclusions in the DEIS, and a final EIS (FEIS) is prepared. The FEIS must document and include responses to all substantive comments received on the DEIS from public agencies and the public (40 CFR §1502.18). Responses to comments can be made in the form of changes to the text and analyses included in the DEIS, factual corrections, new alternatives considered or an explanation of why a comment does not require a response (40 CFR §1503.4). A copy or summary of substantive comments and the responses to them must be included in the FEIS [40 CFR §1503.4(a)]. The contents of an FEIS is provided in Table 1.6.

If not already identified in the DEIS, the FEIS should identify the preferred alternative to be recommended for implementation. The preferred alternative could be one of the reasonable alternatives considered in the DEIS or an alternative that is a composite or variant of the reasonable alternatives considered in the DEIS.

If the preferred alternative will involve the use of a resource protected under Section 4(f), a final Section 4(f) evaluation must be prepared and included as a separate section of the FEIS or as a separate document.

When completed, the FHWA will publish the FEIS and EPA will publish a notice of availability of the FEIS in the *Federal Register*. A minimum of 30 days must pass after publication of the FEIS before FHWA can make a final decision on the proposed action (40 CFR §1504).

www.EngineeringEBooksPdf.com

Record of Decision. Preparation and publication of a record of decision (ROD) by FHWA is the final step in the EIS process. The ROD documents the decisions made by FHWA for the proposed action, including identification of the preferred alternative, and the measures identified to mitigate any identified adverse impacts of the preferred alternative, including the commitments and plans to enforce and monitor implementation of the measures (40 CFR §1505.2). The ROD also discloses the bases for the agency's decision, including the reasons for whether to proceed with the proposed action. The ROD must also discuss whether all practical means have been applied to avoid or minimize environmental harm have been adopted, and, if not, why they were not (40 CFR §1505.2). The ROD must be made publicly available by publication in the *Federal Register* or on the agency website, or both.

Environmental Reevaluation and Supplemental EIS. An environmental reevaluation (ER) of the FEIS is prepared when any of the following circumstances occur:

- An acceptable FEIS is not submitted to FHWA within 3 years from the date of circulation of the DEIS.
- No major steps have been taken to advance a project (e.g., allocation of a substantial portion of right-of-way or construction funding) within 3 years from the date of approval of the FEIS.
- When there have been lengthy periods of inactivity between major steps to advance the project.

The purpose of the reevaluation is to determine whether there has been a substantial change in the social, economic, and environmental effects of the proposed action. This could result from changes in the project itself or from changes in the context under which the project is to be undertaken.

A supplemental EIS should be prepared when there are changes that result in significant impacts not previously disclosed in the original document. An EIS may be supplemented or amended at any time and must be supplemented or amended when (1) changes to the proposed project would result in significant environmental impacts that were not disclosed in the EIS or (2) new information or circumstances relevant to environmental concerns and bearing on the proposed project or its impacts would either bring to light or result in significant environmental impacts not evaluated in the original document. The supplemental EIS need only address those subjects in the original document affected by the changes or new information.

1.3.2 State Environmental Review Legislation

Fifteen states and the District of Columbia and Puerto Rico have enacted environmental policy acts, which, because they are largely modeled on NEPA, are collectively referred to as "Little NEPAs." A list of these statutes is provided in Table 1.7. Highway projects may be affected by these state-specific environmental requirements, which, in general, follow or expand upon federal objectives and programs. In some instances, the state defers to the NEPA process, while, in others, the state reviews proceed as independent but parallel and coordinated efforts. In addition, increasingly, states are being given powers to implement federal programs, leading to their further involvement in the environmental review of highway projects. For example, under SAFETEA-LU, Congress provided for a process whereby some states could assume responsibilities for all environmental compliance for highway projects, including NEPA.

www.EngineeringEBooksPdf.com

TABLE 1.7 "Little NEPAs"

Jurisdiction	Little NEPA citation
Arkansas	Ark. Stat. Ann. §8-1-101
California	Cal. Pub.Res. Code §§21000 et seq.
Connecticut	Conn. Gen. Stat. Ann. §§22a-14 et seq.
District of Columbia	D.C. Code Ann. §§6-981 et seq.
Florida	Fla. State. §§380.92 et seq.
Hawaii	Haw. Rev. Stat. §§343-1 et seq.
Indiana	Ind. Code Ann. §§13-12-4-1 et seq.
Maryland	Md. Nat. Res. Code Ann. §§1-301 et seq.
Massachusetts	Mass. Gen. Laws Ann. Ch 30 §§61 et seq.
Minnesota	Minn. Stat. Ann. §§116D.01 et seq.
Montana	Mont. Code Ann. §§75-1-101 et seq.
New York State	N.Y. Envil. Conserv. Law §§8-0101 et seq.
North Carolina	N.C. Gen. Stat. §§113A-1 et seq.
Puerto Rico	P.R. Laws Ann. Tit. 12, §§1121 et seq.
South Dakota	S.D. Codified Laws Ann. §§34A-9-1 et seq.
Virginia	Va. Code §§10.1-1200 et seq.
Washington	Wash. Rev. Code §§43-21C 010 et seq.
Wisconsin	Wis. Stat. §§1.11 et seq.

1.4 FEDERAL REQUIREMENTS GOVERNING RESOURCE-SPECIFIC ENVIRONMENTAL ASPECTS

In addition to the federal requirements governing the planning and implementation of highway projects, a number of federal statutes and regulations have been promulgated to protect the environment. The responsibility and authority associated with these requirements are assigned to a number of federal agencies, or delegated to the states. A listing of key federal environmental requirements is provided in Table 1.8.

Environmental requirements are also included in a number of executive orders issued by the President of the United States that mandate policy on specific issues, including orders concerning the protection of wetlands, floodplains, significant cultural resources, disadvantaged and minority populations, marine resources, and energy supply. Relevant executive orders are included in Table 1.9.

1.4.1 Federal Requirements Protecting Air Quality and Noise

Clean Air Act (42 USC §7401–7626). The 1970 amendments to the Clean Air Act (CAA) provided a comprehensive approach to regulating the nation's air quality. The CAA addressed both mobile and stationary air pollution sources and required the EPA to set and enforce national ambient air quality standards (NAAQSs). The CAA has been amended several times since 1970. Amendments to the CAA that were adopted in 1990 were particularly extensive and included provisions for stricter mobile source emissions, as well as restrictions on emissions linked to stationary sources including hazardous or toxic pollutants.

EPA has overall authority for the implementation of CAA requirements. Pursuant to the CAA, EPA established primary and secondary NAAQSs for six pollutants: ozone, carbon

www.EngineeringEBooksPdf.com

TABLE 1.8 Major Federal Environmental Legislation and Regulations/Responsible Agencies

Clean Air Act (42 USC §7401 et seq.)/U.S. Environmental Protection Agency (EPA)
Noise Control Act, amended 1978 (42 USC §§4901-4918)/U.S. EPA
Clean Water Act, 1972 (33 USC §1251 et seq.)/U.S. EPA, Army Corps of Engineers
Safe Drinking Water Act (SDWA; 42 USC §300)/U.S. EPA
Resource Conservation and Recovery Act (RCRA), 1974, amended 1984 (42 USC §6901 et seq.)/ U.S. EPA
Toxic Substances Control Act (TSCA), 1976 (15 USC §260 et seq.)/U.S. EPA
Comprehensive Environmental Response, Compensation, and Liability Act (CERCLA), 1980 (42 USC §9601 et seq.)/U.S., EPA
Superfund Amendments and Reauthorization Act (SARA), 1986 (42 USC §6991 et seq.)/U.S. EPA
Farmland Protection Policy Act, 1981 (73 USC §4201 et seq.)/U.S. Department of Agriculture
Federal Coastal Zone Management Act, 1972 (16 USC §§1451-1464)/U.S. Department of Commerce
Wild and Scenic Rivers Act 1968, (16 USC §§1271-1287)/U.S. Department of the Interior (DOI)
Fish and Wildlife Coordination Act 1934 (16 USC §§661-666)/U.S. DOI
U.S. Fish and Wildlife Service
Federal Endangered Species Act (ESA) 1973 (16 USC §£1531-1543)-U.S., DOI, U.S. Fish and Wildlife Service, DOC, National Marine Fisheries Services (NMFS)
Rivers and Harbors Act, 1899 (33 USC §401, et seq.)/U.S. Army Corps of Engineers (USACOE), USCG
National Historic Preservation Act 1966 (16 USC §470 et seq.)—Advisory Council on Historic Preservation
Historic Buildings Act of 1935 (16 USC §£461-471)/National Park Service/DOI
The Archaeological and Historical Preservation Act, 1974 (16 USC §469)/DOI
Archaeological Resources Act, 1979 (16 USC §470 et seq.)/DOI
Native American Grave Protection and Repatriation Act of 1990/DOI
Department of Transportation Act, Section 4(f), 1966, (49 USC §303)/DOT
Land and Water Conservation Fund Act of 1965, Section 6(f) (16 USC §§460l-4 through 460l-11)/DOI
American Indian Religious Freedom Act, 1978 (42 USC §1996)
Uniform Relocation Assistance and Real Properties Acquisition Act, 1970 (42 USC §4601)

monoxide, sulfur dioxide, lead, nitrogen oxides, and particulate matter. The CAA also regulates hazardous air pollutants (HAPs) released by chemical plants, dry cleaners, printing plants, and motor vehicles.

States are responsible for meeting CAA objectives by developing state implementation plans (SIPs). SIPs integrate regulations with other measures designed to meet NAAQS and associated CAA requirements. Federal agencies must comply with the approved SIP of the state in which they are operating. Many SIPs include air quality goals that exceed federal requirements and carry their own set of penalties and fines for noncompliance.

Current provisions of CAA relevant to highway engineering are included in Title I (Attainment and Maintenance of NAAQS), Title II (Mobile Sources), and Title VII (Enforcement). Title I addresses air pollution control requirements for "nonattainment areas," (i.e., those metropolitan areas in the United States that have failed to meet NAAQSs.) Ozone is the most widespread pollutant in nonattainment areas. Therefore, the focus of controls in these areas is on controlling the volatile organic compounds (VOCs) and nitrogen oxides that are precursors to the formation of ozone. Title II regulates tailpipe emissions from motor vehicles and sets emission limitations for carbon monoxide,

www.EngineeringEBooksPdf.com

TABLE 1.9 Executive Orders Affecting Highway Projects

Executive Order 13423, Strengthening Federal Environmental, Energy, and Transportation Management (January 24, 2007)
Executive Order 13352, Executive Order Facilitation of Cooperative Conservation (26 August 2004)
Executive Order 13274, Environmental Stewardship and Transportation Infrastructure Project Reviews (18 September 2002)
Executive Order 13212, Actions To Expedite Energy-Related Projects (18 May 2001)
Executive Order 13211, Actions Concerning Regulations That Significantly Affect Energy Supply, Distribution, or Use (18 May 2001)
Executive Order 13186, Responsibilities of Federal Agencies To Protect Migratory Birds (10 January 2001)
Executive Order 13175, Consultation and Coordination With Indian Tribal Governments (6 November 2000)
Executive Order 13158, Marine Protected Areas. (26 May 2000)
Executive Order 13150, Federal Workforce Transportation (21 April 2000)
Executive Order 13141, Environmental Review of Trade Agreements (16 November 1999)
Executive Order 13112, Invasive Species (3 February 1999)
Executive Order 13089, Coral Reef Protection (11 June 1998)
Executive Order 13057, Federal Actions in the Lake Tahoe Region (26 July 1997)
Executive Order 13045, Protection of Children from Environmental Health Risks and Safety Risks (21 April 1997)
Executive Order 13031, Federal Alternative Fueled Vehicle Leadership (13 December 1996)
Executive Order 13006, Locating Federal Facilities on Historic Properties in our Nation's Central Cities (21 May 1996)
Executive Order 12969, Federal Acquisition and Community Right-To-Know (8 August 1995)
Executive Order 12902, Energy Efficiency and Water Conservation at Federal Facilities (8 March 1994)
Executive Order 12898, Federal Actions to Address Environmental Justice in Minority Populations and Low-Income Populations (11 February 1994)
Executive Order 12889, Implementation of the North American Free Trade Agreement (28 December 1993)
Executive Order 12856, Federal Compliance With Right-To-Know Laws and Pollution Prevention Requirements (3 August 1993)
Executive Order 12843, Procurement Requirements and Policies for Federal Agencies for Ozone-Depleting Substances (21 April 1993)
Executive Order 12123, Offshore Oil Spill Pollution (26 February 1979)
Executive Order 12114, Environmental Effects Abroad of Major Federal Actions (4 January 1979)
Executive Order 12088, Federal Compliance with Pollution Control Standards (13 October 1978)
Executive Order 11990, Protection of Wetlands (24 May 1977)
Executive Order 11988, Floodplain Management (24 May 1977)
Executive Order 11912, Delegation of Authorities Relating to Energy Policy and Conservation (13 April 1976)—partially revoked by Executive Order 12919
Executive Order 11514, Protection and Enhancement of Environmental Quality (3/1970) as amended by Executive Order 11991 (24 May 1977)
Executive Order 11593, Protection and Enhancement of the Cultural Environment (1971)

www.EngineeringEBooksPdf.com

hydrocarbon, and nitrogen oxides. Provisions for enforcement under Title VII include fines and terms of imprisonment. Federal violations prosecuted by EPA may result in civil penalties of up to $25,000 per day and criminal enforcement if the violator fails to abate on notice [42 USC §7413(b)].

If a SIP is not effective in achieving NAAQSs in a nonattainment area, EPA may prepare an implementation plan of its own and/or impose construction bans on stationary sources, or withhold EPA-approved federal funds (such as transportation improvement grants) targeted for the state.

Transportation Conformity. The CAA required EPA to promulgate rules to ensure that federal actions do not impede efforts to attain or maintain compliance with the NAAQS. These rules require that metropolitans and statewide transportation plans conform to CAA requirements. These transportation conformity regulations apply to highways.

The transportation conformity rules published under 40 CFR 93, address this requirement with respect to actions of certain transportation agencies, including funding or approvals, that involve projects in nonattainment and maintenance areas, (i.e., areas that were previously designated as nonattainment but currently in compliance with the NAAQS). The transportation conformity rule established the criteria and procedures by which the FHWA, the FTA and metropolitan planning organizations (MPOs) determine the conformity of federally funded or approved highway and transit plans, programs, and projects to SIPs. Conformity ensures that transportation plans, programs, and projects do not result in new air quality violations, worsen existing violations, or delay timely attainment of the NAAQS.

Noise Control Act (NCA) 42 USC §4901–4918. The Noise Control Act (NCA) was enacted to control noise emitted from human activity. The NCA include two requirements that are relevant to highway engineering: (1) the required developing of state and local programs to control noise, and (2) the required controlling the sources of noise of surface transportation and construction activities.

The NCA also created the EPA Office of Noise Abatement and Control (ONAC). ONAC promulgated regulations to implement the NCA (40 CFR 201 through 211). Noise limits for motor vehicles involved in interstate commercial activities are identified in 40 CFR 202. While noise emissions from construction equipment and compressors are regulated by 40 CFR 204. Noise limits and measurement procedures for trucks over 10,000 lb and motorcycles are included in 40 CFR 205.

Control of highway noise is currently under the jurisdiction of FHWA. FHWA noise regulations are found in 23 CFR 772 and include the FHWA Noise Abatement Criteria (NAC). The NAC include maximum noise levels for various of land uses from adjacent highways. When highway noise levels approach or exceed the NAC, or when highway noise significantly increases above existing noise levels, noise abatement measures must be considered. FHWA allows individual states to define "approach" and "significant increase." Typically, "approach" means within 1 or 2 dB and "significant increases" are typically defined as increases of 10 or 15 dB above existing noise levels.

1.4.2 Federal Requirement Protecting Water Resources and Sensitive Ecological Resources

Clean Water Act (33 USC §1251 et seq. CWA). The CWA was enacted in 1977 as amendments to the Federal Water Pollution Control Act of 1972. Its stated goal is to "restore and maintain the chemical, physical, and biological integrity of the Nation's waters." The CWA gave EPA the authority to implement pollution control programs such as setting wastewater standards for industry. The CWA also contained requirements to set water quality standards

www.EngineeringEBooksPdf.com

for all contaminants in surface waters, and provided funding for the construction of sewage treatment plants under the construction grants program. It also recognized the need for planning to address the critical problems posed by nonpoint source pollution.

One of the mechanisms to achieve the objectives of the CWA is the prohibition of discharges, including dredge and fill material, into navigable waters. The CWA made it unlawful for any person to discharge any pollutant from a point source into navigable waters, unless a permit was obtained under its provisions. Sections 402 and 404 of the CWA establish two complementary permit programs through which appropriate federal or state officials may authorize the discharge of pollutants.

Section 402 of the CWA has led to development of the National Pollutant Discharge Elimination System (NPDES) under which permits are issued for the discharge of material that is other than dredge or fill, including storm water runoff from highway facilities into navigable waters.

Under subsections 402(p)(2)(C) and (D) of the CWA, storm water permits are necessary for discharges from a municipal separate storm sewer system serving an incorporated or unincorporated area with a population over 100,000. The EPA definition of municipal separate storm sewer is "a conveyance or system of conveyances (including roads with drainage systems, municipal streets, catch basins, curbs, gutters, ditches, manmade channels, or storm drains)." The definition goes on to specify that the system of conveyances may be owned by any of a number of types of municipal governing bodies and specifically includes states, that the conveyances must be specifically designed for the purpose of collecting or conveying storm water, and that they are not to be part of a combined sewer or part of a publicly owned treatment works (POTW).

Section 404 of the CWA has led to the development of a permit program administered by the USACOE for the deposition of dredged or fill materials into navigable waters. The definition of navigable waters has been contested in several recent Supreme Court decisions that have begun to limit the reach of the CWA permit authority in wetlands to areas that have a significant nexus with navigable waters. In June 2007, the EPA and USACOE issued agency guidance regarding CWA jurisdiction following two of these recent decisions the consolidated cases Rapanos v. United States and Carabell v. United States [126 S. Ct. 2208 (2006)].

States often have overlapping jurisdiction with the USACOE regarding permitting of actions within navigable waters. State permits related to navigation and wetland encroachment are common and need to be taken into account when developing a project. State programs are usually more restrictive, with a more expanded definition of wetland boundaries or a regulated buffer zone. In two states—Michigan and New Jersey—some permitting authority has been ceded to the state, simplifying the process.

The CWA prohibits storm waters from being used to transport or collect wastes and requires that standards for water pollution be established that do not diminish the uses of the water. EPA has the authority to develop a framework of regulation that can be fully delegated to states once the EPA has approved their regulatory program. The CWA requires states to establish a policy of nondegradation that protects and preserves water (J. T. Dufour, *California Environmental Compliance Handbook,* California Chamber of Commerce, Sacramento, 1993, pp. 72–74).

In the preamble of the November 1990 amendments to the CWA, EPA explains its decision to include state-owned highways as municipal separate storm sewers. EPA identifies discharges from state highways as a significant source of runoff and pollutants and as one of the "issues and concerns of greatest importance to the public" (*Federal Register,* Part II, Environmental Protection Agency 40 CFR 122, 123, and 124, November 16, 1990, p. 48039).

To avoid the problems associated with multiple permittees for systemwide discharges, the CWA regulations include a method whereby interconnected systems owned and operated by local agencies and state-owned highways in areas of medium to high population

www.EngineeringEBooksPdf.com

may be combined into a single permit. The regulations allow the state transportation agency to be named as a copermittee in a systemwide permit, or to be named in a separate municipal permit. (E. M. Jennings, "Coverage of State Highways under Municipal Storm Water Permits," Memorandum, Office of Chief Counsel, California State Water Resources Control Board, Sacramento, November 2, 1992, p. 31.)

Storm water systems owned by state highway departments in low-population areas (under 100,000) are not required to be permitted. Appendixes to Part 122 indicate the incorporated areas and unincorporated counties in the United States with sufficient population to require municipal storm water permits. This information is shown in Table 1.10.

Application requirements for a group permit for discharges from large and medium municipal storm sewers fall into two parts. Also, an annual report must be submitted, as discussed later.

Storm Water Permits for Construction. EPA in 1990 established final regulations for controlling storm water runoff from specific categories of industries and activities (40 CFR 122, 123, and 124). Any discharger of, or person who proposes to discharge, a waste other than to a sewer system, or changes the character of a current discharge, is required to report this activity to the local enforcement agency (Dufour, op. cit., p. 75). Once reported, the agency will evaluate the discharge and may

- Issue waste discharge requirements.
- Waive discharge requirements for insignificant discharges such as well testing or construction dewatering (no waiver is permitted if the discharge is to surface waters).
- Prohibit the discharge if sufficiently protective discharge requirements cannot be met by the discharger.

Discharge requirements are issued through an NPDES permit that specifies conditions the discharger must meet. The conditions are based on the established water quality objectives and the capacity of the existing storm water drainage system or receiving waters to assimilate the discharge. Discharge limitations are usually expressed as a combination of quantitative and procedural specifications. CWA provides for three types of NPDES permits: individual, group, and general. Issuance of waste discharge requirements must be noticed for public comment and approved at a hearing of the local authority (Ibid., p. 74).

The primary industrial category in the regulation relevant to building and maintaining highways is "*construction activities.*" Construction activities, in this context, include clearing, grading, and excavating that result in the disturbance of 5 acres or more of land that is not part of a larger (nonhighway) construction project. Construction sites were targeted because studies showed that the runoff from construction sites has high potential for serious water quality impacts. Sediment runoff from construction sites may be 10 to 20 times that from agricultural lands. Non-point-source pollutants from construction sites include sediment, metals, oil and grease, nitrates, phosphates, and pesticides.

To obtain an NPDES construction permit, a notice of intent must first be filed requesting permit coverage at least 48 hours before construction begins. The NOI contains the following information:

1. Owner of the site (legal name and address) and contact person's name, title, and telephone number. This entity must have control over construction plans and specifications, the ability to make changes, and day-to-day operational control.
2. Construction site information—whether the construction is part of a larger project or the portion of the site that is impervious both before and after construction activities. Site location must be provided as latitude and longitude. Indicate whether endangered or threatened species or designated critical habitats are present, as well as whether the project is on Indian Country Lands.

www.EngineeringEBooksPdf.com

TABLE 1.10 Population Areas That Require Storm Water Permits

A. Incorporated places with populations of 250,000 or more	
State	Incorporated place
Alabama	Birmingham
Arizona	Phoenix, Tucson
California	Long Beach, Los Angeles, Oakland, Sacramento, San Diego, San Francisco, San Jose
Colorado	Denver
District of Columbia	
Florida	Jacksonville, Miami, Tampa
Georgia	Atlanta
Illinois	Chicago
Indiana	Indianapolis
Kansas	Wichita
Kentucky	Louisville
Louisiana	New Orleans
Maryland	Baltimore
Massachusetts	Boston
Michigan	Detroit
Minnesota	Minneapolis, St. Paul
Missouri	Kansas City, St. Louis
Nebraska	Omaha
New Jersey	Newark
New Mexico	Albuquerque
New York	Buffalo, Bronx Borough, Brooklyn Borough, Manhattan Borough, Queens Borough, Staten Island Borough
North Carolina	Charlotte
Ohio	Cincinnati, Cleveland, Columbus, Toledo
Oklahoma	Oklahoma City, Tulsa
Oregon	Portland
Pennsylvania	Philadelphia, Pittsburgh
Tennessee	Memphis, Nashville/Davidson
Texas	Austin, Dallas, El Paso, Fort Worth, Houston, San Antonio
Virginia	Norfolk, Virginia Beach
Washington	Seattle
Wisconsin	Milwaukee

B. Incorporated places with populations greater than 100,000 and less than 250,000	
State	Incorporated place
Alabama	Huntsville, Mobile, Montgomery
Alaska	Anchorage
Arizona	Mesa, Tempe

(*Continued*)

www.EngineeringEBooksPdf.com

TABLE 1.10 Population Areas That Require Storm Water Permits (*Continued*)

State	Incorporated place
Arkansas	Little Rock
California	Anaheim, Bakersville, Berkeley, Chula Vista, Concord, El Monte, Escondido, Fremont, Fresno, Fullerton, Garden Grove, Glendale, Hayward, Huntington Beach, Inglewood, Irvine, Modesto, Moreno Valley, Oceanside, Ontario, Orange
Colorado	Aurora, Colorado Springs, Lakewood, Pueblo
Connecticut	Bridgeport, Hartford, New Haven, Stamford, Waterbury
Florida	Fort Lauderdale, Hialeah, Hollywood, Orlando, St. Petersburg, Tallahassee
Georgia	Columbus, Macon, Savannah
Idaho	Boise City
Illinois	Peoria, Rockford
Indiana	Evansville, Fort Wayne, Gary, South Bend
Iowa	Cedar Rapids, Davenport, Des Moines
Kansas	Kansas City, Topeka
Kentucky	Lexington-Fayette
Louisiana	Baton Rouge, Shreveport
Massachusetts	Springfield, Worcester
Michigan	Ann Arbor, Flint, Grand Rapids, Lansing, Livonia, Sterling Heights, Warren
Mississippi	Jackson
Missouri	Independence, Springfield
Nebraska	Lincoln
Nevada	Las Vegas, Reno
New Jersey	Elizabeth, Jersey City, Paterson
New York	Albany, Rochester, Syracuse, Yonkers
North Carolina	Durham, Greensboro, Raleigh, Winston-Salem
Ohio	Akron, Dayton, Youngstown
Oregon	Eugene
Pennsylvania	Allentown, Erie
Rhode Island	Providence
South Carolina	Columbia
Tennessee	Chattanooga, Knoxville
Texas	Abilene, Amarillo, Arlington, Beaumont, Corpus Christi, Garland, Irving, Laredo, Lubbock, Mesquite, Pasadena, Plano, Waco
Utah	Salt Lake City
Virginia	Alexandria, Chesapeake, Hampton, Newport News, Portsmouth, Richmond, Roanoke
Washington	Spokane, Tacoma
Wisconsin	Madison

C. Counties with unincorporated urbanized areas with population of 250,000 or more

State	County
California	Los Angeles, Sacramento, San Diego
Delaware	New Castle
Florida	Dade
Georgia	De Kalb
Hawaii	Honolulu
Maryland	Anne Arundel, Baltimore, Montgomery, Prince Georges
Texas	Harris
Utah	Salt Lake
Virginia	Fairfax
Washington	King

www.EngineeringEBooksPdf.com

TABLE 1.10 Population Areas That Require Storm Water Permits (*Continued*)

D. Counties with unincorporated urbanized areas with population greater than 100,000 and less than 250,000	
State	County
Alabama	Jefferson
Arizona	Pima
California	Alameda, Contra Costa, Kern, Orange, Riverside, San Bernardino
Colorado	Arapahoe
Florida	Broward, Escambia, Hillsborough, Lee, Manatee, Orange, Palm Beach, Pasco, Pinellas, Polk, Sarasota, Seminole
Georgia	Clayton, Cobb, Fulton, Gwinnett, Richmond
Kentucky	Jefferson
Louisiana	East Baton Rouge Parish, Jefferson Parish
Maryland	Howard
Nevada	Clark
North Carolina	Cumberland
Oregon	Multnomah, Washington
South Carolina	Greenville, Richland
Virginia	Arlington, Chesterfield, Henrico, Prince William
Washington	Pierce, Snohomish

Source: Adapted from *Federal Register,* vol. 55, no. 222, November 16, 1990, pp. 48073, 48074.

3. Scheduled beginning and ending dates of construction.
4. Identification of the receiving body of water, and storm water drainage information including a site map.
5. Type of construction activity: transportation should be indicated if the project is a roadway; utilities should be indicated for the installations of sewer, electric, and telephone systems.
6. Material handling and management practices indicating the type of material to be stored and handled on site and the management practices to be used to control storm water pollution.
7. Regulatory status of the site, including approval status of the erosion or sediment control plan.
8. Signature of the owner of the site certifying that the information is accurate.

Most statewide NPDES permits for general construction activities require the permit holder to develop and implement a storm water pollution prevention plan (SWPPP) using either best available technology economically achievable (BAT), best conventional technology (BCT), or best management practices (BMPs) to control pollutant discharge both during and after construction activities. Once prepared, the SWPPP will be maintained at the construction site by the highway department representative and made available on request by the local enforcement agency. All contractors and subcontractors working at the site are responsible for implementing the SWPPP. The SWPPP will generally include the following components:

1. Location, including a 1/4-mi vicinity map that shows nearby surface water bodies, drainage systems, wells, general topography, and location where storm water from the construction activities will be discharged, including MS4s.
2. A site map that indicates the total site area and total area to be disturbed. This map should indicate the location of the control practices to be implemented, areas where

www.EngineeringEBooksPdf.com

wastes and soils will be stored, drainage patterns for the site both before and after construction activity, areas of soil disturbance, areas of surface water, potential soil erosion areas, existing and planned paved areas, vehicle storage areas, areas of existing vegetation, and areas of postconstruction controls.

3. A narrative description of the construction site, project, and activities. This should include a description of the fill material and native soils at the construction site and the percentage of site surface area that is impervious both before and after construction activities.
4. A narrative description of toxic material used, treated, or disposed of at the construction site.
5. Identification of potential sources of storm water pollution, and name of receiving water.
6. Proposed controls and best management practices during construction, including description of
   - State and local erosion sediment control requirements
   - Source control practices intended to minimize contact between the construction equipment and materials and the storm water being discharged
   - Erosion and sediment control procedures to be implemented
   - Plan to eliminate or reduce discharge of other materials into the storm water
7. Proposed postconstruction waste management and disposal activities and planned controls, including a description of state and local erosion and sediment postclosure control requirements.
8. Estimated runoff coefficient for the site, estimated increase in impervious area following the construction, nature of fill, soil data, and quality of discharge.
9. List of the contractors and their subcontractors who will be working at the construction site.
10. Employee training.
11. Maintenance, inspection, and repair activities.

Control measures for sediment include grading restrictions, runoff diversion, application of straw bales and filter fabric, revegetation requirements, and retention basins. Control measures for other pollutants include roof drains, infiltration trenches, grassy swales to detain storm water to allow sediments to settle out, oil/grit separators, detention basins, and proper management practices such as the proper application of fertilizers and pesticides.

Another approach used to implement the NPDES program for state highway agencies is to issue *comprehensive permits for all relevant highway construction*, maintenance, and operations activities in areas meeting the population requirements outlined in 40 CFR 122.26. The benefit of a comprehensive permit is the management efficiency of administering the permit from both the regulatory agency and highway department perspectives.

In California, for instance, the California Regional Water Quality Control Board (RWQCB) is responsible for issuing storm water discharge permits. The RWQCB in the San Francisco Bay area has issued a comprehensive NPDES permit for storm water discharged directly or through municipal storm drain systems to lakes, water supply reservoirs, groundwaters, the Pacific Ocean, San Francisco Bay, San Pablo Bay, Suisun Bay, the Sacramento River Delta, or tributary streams or watercourses and contiguous water bodies in the San Francisco Bay region (District 4 and portions of District 10 of the California Department of Transportation, or Caltrans).

Provisions of the permit cover maintenance operations and include requirements to submit plans for maintenance activities that affect storm water discharges and to improve

www.EngineeringEBooksPdf.com

practices that will result in reduction of pollutants in discharges. Road sweeping plans, storm drains, catch basins, inlet and channel maintenance, and vegetation control plans are required. Caltrans must prepare storm water pollution prevention plans for maintenance facilities that cover such activities as vehicle and equipment maintenance, cleaning, fueling practices, and storage and handling of construction materials, fertilizers, pesticides, paints, solvents, and other chemicals.

Under the provisions of the permit, Caltrans must rank construction activities on the basis of their potential impacts on receiving waters from pollutants in storm water discharges. Plans must be developed for erosion control, chemical and waste management, and postconstruction permanent features. Training is a key component of these plans.

The permit also encompasses permanent control measures for the management of storm water draining from Caltrans rights-of-way in areas meeting the population criteria. Consideration must be given to high-risk areas where spills may occur and must include a plan to reduce the pollutants discharged into the system over time. This portion of the permit requires Caltrans to develop mechanisms to control illegal dumping, to respond to accidental discharges, and to identify and control procedures for discharge in a category not expressly prohibited by the permit.

The RWQCB included specific provisions to assist in meeting water quality goals. For example, requirements of the permit include specific measures to reduce the mass load of copper in storm water discharges.

Monitoring plans and annual reports are also required in the NPDES permit and are generally consistent with these provisions in standard construction and/or municipal storm water permits.

Sustainable storm water management practices have been evolving over the last 20 years, but it has been only during the last decade that the movement has gained momentum and designers are looking toward best management practice and low impact design solutions to storm water issues. These design concepts use the natural capacity of the environment to detain, filter, and reduce (through evaporation and transpiration) the runoff from a roadway facility. Relying on these natural systems, rather than engineered water conveyance and discharge infrastructure, can

- Reduce regulatory burden and time in gaining approval for the project.
- Improve the function of treatment plant—reduce combine sewer outfills.
- Improve the environment—using design measures to create wetlands and other habitat.
- Gain community buy-in.
- Reduce costs.

Wetlands Involvement (Executive Order 11990). Under Executive Order 11990, the following procedures must be followed for any federal action that involves wetlands:

- An opportunity for early public involvement must be provided for actions involving wetlands. For those actions requiring either a FONSI or an EIS, any notices for a public hearing, or an opportunity for a hearing, must indicate if any alternatives are located in wetlands. At any hearing, the location of wetlands must be identified. A newspaper notice inviting written comments must be published prior to issuance of a categorical exclusion.
- Alternatives that would avoid wetlands must be considered, and if avoidance is not possible, measures to minimize harm to wetlands must be included in the action. Documentation of these avoidance requirements must be included in an EA or EIS.
- A wetlands-only-practicable-alternative finding must be prepared for actions requiring a FONSI or an EIS (FHWA Technical Advisory T6640.8A).

www.EngineeringEBooksPdf.com

Floodplain Involvement (Executive Order 11988). Executive Order 11988 require additional steps in the environmental review process for actions that encroach on floodplains. Specifically, the public must be given the opportunity for early review and comment, and notices must reference potential encroachments on the base floodplain. In addition, floodplain-only-practicable-alternative finding must be prepared for actions involving a significant encroachment (see FHWA Technical Advisory T6640.8A). This finding must be included in the final environmental document.

A floodplain evaluation must be prepared and summarized in the environmental document in accordance with federal regulation (23 CFR 650, Subpart A). This floodplain evaluation should contain a project description, including a map of the project showing the base floodplain and all project encroachments, as well as alternatives to encroachment. A discussion should be provided of the practicality of alternatives that would avoid longitudinal or significant encroachments.

The floodplain evaluation should be summarized in the EA or EIS. The portions of the evaluation pertaining to fish and wildlife, vegetation, wetlands, growth inducement, etc., are to be included in the respective sections of the EA or EIS. Summaries involving floodplains in general, as well as hydraulics and risk, are to be included in a section entitled Floodplains.

Safe Drinking Water Act. The Safe Drinking Water Act (SDWA) was enacted in 1974 to protect the nation's drinking water supply and protect public health through appropriate water treatment technologies. The SDWA applies to all of the more than 160,000 public water systems in the United States. SDWA establishes maximum contaminant levels (MCLs), or standards for the maximum safe levels of specific constituents in potable water. Important to highway engineers is the provision of SWDA that mandates protection of sources of drinking water. The SDWA requires the protection of drinking water and its sources: rivers, lakes, reservoirs, springs, and groundwater wells. The location of these resources, therefore, becomes an early consideration in the siteing and design phases of a project.

Federal Endangered Species Act. The Federal Endangered Species Act of 1973 (16 USC §§1531–1543) provides a means whereby the ecosystems upon which endangered species and threatened species depend may be conserved. It also provides a program for the conservation of such endangered and threatened species. Section 7 of the act requires each federal agency, in consultation with the Secretary of the Department of the Interior, to ensure that actions authorized, funded, or carried out by a federal agency do not jeopardize the continued existence of any endangered or threatened species or result in the destruction or adverse modification of habitat of such species unless such agency has been granted an exemption for such action.

For federal highway projects, a request is made to the U.S. Fish and Wildlife Service (FWS) regarding whether any species listed or proposed as endangered are present in the project area. If so, a biological assessment must be completed and reviewed by the FWS. The FWS will make a determination as to the impacts on critical habitat or on the species itself and whether the impacts can be mitigated or avoided. An exemption from the Endangered Species Act must be obtained where a project would result in impacts to endangered species.

The level of involvement with the endangered species process can vary widely from project to project, but will generally involve the following steps:

- Establish an area of potential environmental impact (APEI) and potential for conflict with endangered species.
- Once preliminary alternatives are selected, determine whether a request for a species list from the FWS is required and then request a list, through FHWA, if required.

www.EngineeringEBooksPdf.com

- Perform and document a biological assessment.
- If there are no species present or there will be no effect, obtain FWS concurrence through FHWA before circulating the draft environmental document under NEPA.
- If the preferred alternative affects species, request conference or consultation with the FWS through FHWA, which must be completed before the final environmental document under NEPA can be approved.

Rivers and Harbors Act. The Rivers and Harbors Act of 1899 (33 USC 401 et seq. RHA) was enacted to protect navigation and the navigable capacity of the nation's waters. Two provisions of the act have to potential to significantly affect highway projects proposed in or around U.S. harbors or rivers are

- Section 9 of the RHA, which requires a permit for the construction of bridges or causeways across navigable waters of the United States
- Section 10 of the RHA, which requires a permit for various types of work performed in navigable waters, including stream channelization, excavation, and filling

The permit jurisdiction is divided between two agencies. The Section 9 bridge permit is the responsibility of the USGS. Section 10 for construction activities performed in the water is within the jurisdiction of the USACOE. Although often issued together, this permit has independence from a permit issued under Section 404 of the Clean Water Act.

1.4.3 Federal Requirements Concerning Hazardous and Nonhazardous Waste

Projects that include purchase of new right-of-way, excavation, or demolition or modification of existing structures should be evaluated to determine whether there is any known or potential hazardous waste within the proposed project limits. Where hazardous substances are involved, adequate protection must be provided to employees, workers, and the community prior to, during, and after construction. Typical materials that may constitute hazardous waste include pesticides, organic compounds, heavy metals, industrial waste, or other compounds injurious to human health and the environment.

Assessment of the potential presence of hazardous materials is conducted in two stages referred to as phases I and II. Phase I investigations are based on documentary research and visual observation to identify concerns and evaluate the likelihood that hazardous substances have affected the property. Phase II includes the on-site collection of soil or water samples and completion of laboratory analysis to confirm that contamination is present. Phase I generally consists of historical research to evaluate current and past land uses and operations with a focus on what hazardous substances may have been introduced into the soil or water (including groundwater at the site); a search of regulatory records to evaluate whether the site or adjacent properties are listed in files as having violations, recorded hazardous substances releases or incidents, or a history of storing, handling, using, transporting, or disposing of hazardous substances; physical description of the soil geology and of surface water and groundwater, in order to evaluate the potential for migration of contaminants from the source to another property; and a site walk to observe the site conditions and operations as well as those of the neighboring properties. Phase II is a specifically designed sampling and analysis program that effectively addresses the concerns raised in the Phase I study. Phase II should be designed to collect sufficient data to establish that a valid concern exists and to indicate what level of remediation may be required to address the concern. The American Society for Testing and Materials (ASTM) has developed a standard for completion of Phase I and Phase II investigations.

www.EngineeringEBooksPdf.com

Resource Conservation and Recovery Act (RCRA). The Resource Conservation and Recovery Act was enacted in 1974, and amended in 1984, to address growing concerns related to disposal of hazardous and nonhazardous waste. RCRA requires states to develop EPA-approved hazardous waste management plans and encourages options other than landfill disposal for final disposition of hazardous waste. A major objective of RCRA is to conserve and protect environmental resources, including the land resource that is lost to other uses when it is filled with solid waste. RCRA established

- A system for defining hazardous waste
- A method to determine whether hazardous waste has been generated
- Guidelines on how to store, handle, or treat hazardous waste
- Standards for proper disposal of waste
- Methods to track hazardous waste to its ultimate disposition

Resource recovery is an important area mandated by RCRA, and covers several materials used in highway construction, such as recycled glass, scrap tires, and recycled construction materials. Some hazardous materials can also be treated and recycled for use in highway construction. RCRA also covers issues of "use constituting disposal" for projects that seek to use embankments or road subbase as disposal areas for hazardous waste, if suitability can be demonstrated. Some of the research and demonstration projects in the area of resource recovery that are applicable to highways are discussed later in this chapter.

Toxic Substances Control Act (TSCA). The Toxic Substances Control Act sets the policy for testing suspected toxic substances to evaluate persistence in the environment and their effect on humans (acute toxicity levels and/or carcinogenic effects). TSCA also regulates toxic substances not regulated by RCRA such as asbestos-containing materials (ACM) and polychlorinated biphenyls (PCBs), both of which may be found in existing highway facilities.

Comprehensive Environmental Response, Compensation, and Liability Act (CERCLA). The Comprehensive Environmental Response, Compensation, and Liability Act was passed in 1980. It established national policy and procedures for identifying and remediating sites that are found to be contaminated with hazardous substances, and identified procedures for containing and removing releases of hazardous substances. CERCLA was amended and expanded by the Superfund Amendments and Reauthorization Act of 1986 (SARA). CERCLA established a hazard ranking system sites. The highest ranked sites have been placed on the National Priorities List (NPL) and are eligible for funding for environmental cleanup under CERCLA.

CERCLA provides for "joint and several liability," which means that any party identified as responsible for contamination of a site is considered equally responsible for cleanup costs with all other parties identified, and can be held 100 percent financially responsible in the event that other parties do not pay. Recovering costs from nonpaying parties is then the burden of the paying party and is pursued through the judicial system. Potentially responsible parties (PRPs) may be current or past owners and/or operators of a site where hazardous substances have been released, or persons who arranged for disposal or treatment of hazardous substances at the site. In addition, any person who knowingly accepted hazardous substances for transport to the site may be considered a PRP. Liability under CERCLA may also be retroactive to an era when the practices leading to the contamination were accepted industry standards. Petroleum is excluded from CERCLA unless mixed with other hazardous substances, in which case the entire mixture is considered hazardous. Provisions have been established under SARA for an Underground Storage Tank Trust Fund that will address petroleum releases.

www.EngineeringEBooksPdf.com

A key concept mandated by CERCLA is "cradle-to-grave" responsibility for hazardous substances. Liability for a hazardous substance begins when it is accepted on the site or formulated at the site and continues after it is disposed off-site at a legally permitted facility.

CERCLA is important to the highway planning process primarily in the acquisition of right-of-way. Accepting financial liability for contaminated property may affect the financial feasibility of a project. In addition, if significant cleanup must take place before highway construction can begin, substantial delays to the project may result. The presence of contaminated materials along the alignment of a proposed highway alignment may be a crucial element in determining whether it is viable route. Careful evaluation of the nature and extent of the contamination as well as the cleanup alternatives, costs, schedule, and ongoing liability is warranted on all sites within a planned right-of-way purchase. Title III of SARA established mandatory federal standards for community right-to-know programs, and for reporting toxic chemical release by manufacturers.

1.4.4 Federal Requirements Governing Use of Farmland Recreation Lands and the Coastal Zone

Farmland Protection Policy Act (FPPA). The Farmland Protection Policy Act of 1981 (73 USC §4201 et seq.) requires that a federal agency evaluate the effects a project may have on prime farmland before that agency can approve any action that may result in the conversion of farmland from agricultural use to nonagricultural use. The FFPA requires that before any federal action that would result in conversion of prime farmland is approved, the U.S. Department of Agriculture (USDA) must examine the effects of the action using criteria set forth in the FFPA. If it is determined that there are adverse effects, alternatives to lessen them must be considered. This process requires an inventory, description, and classification of affected farmlands be completed in consultation with the U.S. Soil Conservation Service within the USDA.

The evaluation of land for agricultural use includes productivity, proximity to other land uses, impacts on remaining farmland after the conversion, and indirect or secondary effects of the project on agricultural and other local factors.

Federal Coastal Zone Management Act. The federal Coastal Zone Management Act of 1972 (16 USC §§1451–1464) requires states with coastlines to develop and implement federally approved coastal zone management programs (CZMPs). Once a state has an approved management program, federal projects or federally permitted development affecting the coastal zone must conform to the requirements of the state program "to the maximum extent practicable." A determination of consistency with the approved CZMP is required from the state before federal approval can be granted.

Federal Wild and Scenic Rivers Act. The federal Wild and Scenic Rivers Act (16 USC §§1271–1287) provides that rivers and their immediate environment that meet specified criteria shall be preserved in free-flowing condition, and that they and their immediate environments shall be protected for the benefit and enjoyment of present and future generations. A river placed in the Wild and Scenic River System may not be degraded in its wild and scenic value as a consequence of an action by a federal project or agency. Any proposed federal construction projects on the river or in its immediate environment must be brought before Congress with an explanation of how the river can maintain its wild and scenic recreation value despite the proposed construction activity.

Fish and Wildlife Coordination Act. The Fish and Wildlife Coordination Act (16 USC §§661–666) requires coordination and consultation among (1) the agency proposing the

www.EngineeringEBooksPdf.com

highway project, (2) the FWS, and (3) the state agency responsible for protecting wildlife resources whenever the waters of any stream or other body of water are proposed to be impounded, diverted, or otherwise modified. Full consideration and evaluation of the costs and benefits on a resource and public welfare must be performed including proposed mitigation measures for potential impacts.

Section 6(f) of the Land and Water Conservation Fund Act of 1965. 16 USC 460-4 to -11, Public Law 88-578, protects public recreational land developed using federal funds under this act. Replacement lands converted to nonrecreational uses must be approved by the Secretary of the Department of the Interior.

1.4.5 Federal Requirements Protecting Significant Historical and Cultural Resources

National Historic Preservation Act (NHPA). The purpose of the NHPA is to protect the historical and cultural foundations of the nation. The NHPA created the Advisory Council on Historic Preservation (ACHP) and provides for the review of federal projects that may affect a significant historic site. Section 106 of the NHPA requires all federal agencies to take into account the effects of their actions on significant historic properties. In the Section 106 process, a federal agency must identify affected historic properties, evaluate the effects of an action on such properties, and explore ways to avoid or mitigate those effects.

The NHPA established a partnership with the states, as administered through State Historic Preservation Officers (SHPOs) appointed by the governor of each state, to establish a statewide cultural resources preservation program tailored to state and local needs. The federal agency often conducts the Section 106 process with the ACHP, SHPOs, representatives of Indian tribes and Native Hawaiian organizations, and other interested parties.

On large projects, a programmatic agreement (PA) or a memorandum of agreement (MOA) is often needed. A PA clarifies roles, responsibilities, and expectations of all parties engaged in federal projects that may have an effect on a historic property. An MOA specifies the mitigation measures that the lead federal agency must take to ensure the protection of a property's historic values.

While the NHPA is the principal federal law concerning the preservation of significant historic resources, there are other statutes that relate to various aspects of the federal historic preservation program. These range from the protection of archeological sites on federal lands, to the recognition of properties of traditional cultural or religious significance to Native Americans. These include

- Archeological and Historic Preservation Act of 1974 (AHPA)
- Archeological Resources Protection Act of 1979 (ARPA)
- American Indian Religious Freedom Act of 1978 (AIRFA)
- Native American Graves Protection and Repatriation Act of 1990 (NAGPRA)

The ACHP has established implementing regulations for the protection of historic properties (36 CFR 800). These procedures must be followed for federal undertakings. An undertaking is defined as any project, activity, or program that can result in changes in the character or use of historic properties, if any such historic properties are located in a defined area of potential effects (APE).

Under these procedures, an opportunity for early public involvement must be provided for federal actions during the phase of the project development process. For categorically excluded projects, when properties eligible for inclusion on the National Register of

www.EngineeringEBooksPdf.com

Historic Places are present or potentially present (such as in an archaeologically sensitive area), there must be early public involvement. Projects are excepted from this requirement if (1) they have been defined as having a minimal APE and therefore do not fall within the Section 106 definition of *undertakings* and (2) no known historic resources are present. Opportunity for involvement by the public generally occurs at the identification, evaluation, and consultation stages for projects categorically excluded from review under NEPA.

For those actions requiring evaluation in an EA, notices concerning the initiation of the environmental review process or opportunities for public review must state whether any alternatives could potentially involve historic properties. If this uncertain then the notices must request the names of those persons who may have information relating to historic properties that may be affected or who may be interested in the effects of the undertaking on historic properties. At any hearing, the effects of any alternatives on such properties must be identified.

For projects where an EA or EIS has been prepared, documentation of completion of the Section 106 process should be included in the completed document. For categorically excluded projects, Section 106 documentation is completed separately when resources have been identified.

1.4.6 Federal Requirements Protecting Disadvantaged and Minority Populations

Title VI of the Civil Rights Act of 1964 (42 USC 2000d et seq.). The Civil Rights Act of 1964 was arguably the most instrumental piece of legislation in providing an opportunity voice for minorities to participate in the review of federal capital programs. The Act prohibits discrimination on the basis of race, color, and national origin in projects or programs receiving federal financial assistance.

The Uniform Relocation Assistance and Real Property Acquisition Policies Act of 1970 (Public Law 91-646). The Uniform Relocation Assistance and Real Property Acquisition Policies Act provides benefits and protection for persons whose real property is acquired or who would be displaced from acquired property because of a project or program that receives federal funds. A displaced person may be an individual, family, business, farm, or nonprofit organization. Just compensation is required, and guidelines exist for ensuring fair treatment.

Environmental Justice—Executive Order 12898, Federal Actions to Address Environmental Justice in Minority Populations and Low Income Populations (February 11, 1994). Executive Order 12898 was issued to address disproportionately high and adverse human health and environmental impacts on low-income and minority populations. The U.S. DOT issued DOT Order 5680.1 on April 15, 1997, to ensure that each modal agency within the DOT complies with this executive order. A number of state agencies have adopted analogous procedures requiring an evaluation of projects to determine whether they would result in a disproportionate adverse impact on minority or low-income populations.

1.5 LEAD-BASED PAINT REMOVAL

A significant number of state-maintained steel bridges are coated with lead-based paint. Steel bridges were coated with lead-based paint for more than 40 years. The coating systems have an expected effective life of 15 to 25 years, and those on many bridges are now

www.EngineeringEBooksPdf.com

deteriorating. Life extension and overall protection of the bridges from corrosion are dependent on refurbishing deteriorating coatings.

The public has become increasingly aware that lead can represent a significant human health and environmental threat. When intact and in good condition, the paint does not pose a significant health risk. It is when paint is removed to prepare the surface for coating replacement, or as the paint deteriorates, that the risk of significant health risks escalates.

Many highway structures are located in urban areas where lead-based paint removal has the potential to affect adjacent properties and to expose the public to hazardous concentrations of lead. Bridges are often constructed over water bodies where lead-containing dust from removal operations can affect water quality and the aquatic environment.

1.5.1 Biohazards of Lead

A bioaccumulative substance such as lead can be stored in various organs and tissues of the body. As lead-containing tissues are consumed by larger organisms in the food chain, a cumulative effect occurs in each subsequent organism. For example, a fish in a lead-contaminated environment may be exposed to lead in the water and in the organisms that it eats, which have accumulated lead from their food source, and so on down the chain. Organisms at the top of the food chain are, therefore, exposed to higher concentrations of lead.

In humans, long-term exposure can result in brain and nerve disorders, anemia, elevate blood pressure, reproductive problems, decreases in red blood cell formation, and slower reflexes. In high enough doses or after long-term bioaccumulation, lead exposure can cause death. The Occupational Safety and Health Administration's (OSHA's) Interim Final Rule on Lead Exposure in Construction (29 CFR 1926.62) describes long-term overexposure effects of lead and provides uniform inspection and compliance guidance for lead exposure in construction.

The primary methods of exposure to toxic levels of lead are through inhalation and ingestion. For example, paint removal workers may inhale leaded dust or, in the absence of proper cleaning and preventative measures, may ingest lead after it has settled on food, cigarettes, utensils, or other items placed in their mouths.

1.5.2 Regulatory Framework

Hazardous waste is regulated under the RCRA if more than 220 lb (100 kg) of hazardous waste is generated each month, as is the case in most bridge paint removal projects. RCRA defines the concentrations of a waste that should be considered hazardous and establishes procedures for handling and disposing of hazardous waste. Disposing of waste is the responsibility of the waste generator. The lead-based paint and blasting grit recovered in bridge paint removal projects may contain concentrations of lead sufficient to classify it as hazardous, waste in all instances, the owner of the structure is considered the generator (in some states the contractor removing the paint may be considered a cogenerator). Subtitle C under RCRA is relevant to lead removal activities. Table 1.11 provides a listing of the pertinent RCRA regulations.

Methods of testing wastes to determine whether the waste is hazardous are described in 40 CFR 261. Appendix II of that regulation describes the toxicity characteristic leaching procedure (TCLP, Method 1311) that must be used to analyze for hazardous constituents such as lead. Leachable levels of various elements that will establish waste as hazardous are found in Table 1 of 40 CFR 261.24 and are presented in Table 1.11. Wastes with any of the characteristics listed in Table 1.12 would be considered hazardous. For example,

www.EngineeringEBooksPdf.com

TABLE 1.11 Pertinent Regulations of the Resource Conservation and Recovery Act (RCRA)

RCRA regulation	Description of regulation
40 CFR 260	Hazardous waste management system
40 CFR 262	Standards applicable to generators of hazardous waste
40 CFR 261	Identification and listing of hazardous waste
40 CFR 268	Land disposal restrictions (land ban)
40 CFR 263	Standards applicable to transporters of hazardous waste

TABLE 1.12 RCRA Toxicity Characteristics and Waste Limits

RCRA waste number	Characteristic	Waste limit, ppm*
D001	Ignitability	
D002	Corrosivity	pH<2; pH>12.5
D003	Reactivity	
D004	Arsenic toxicity	5.0
D005	Barium toxicity	100.0
D006	Cadmium toxicity	1.0
D007	Chromium toxicity	5.0
D008	Lead toxicity	5.0
D009	Mercury toxicity	0.2
D010	Selenium toxicity	1.0
D011	Silver toxicity	5.0

*Corrosivity is measured in pH units.

Source: Based on Table 1 of 40 CFR 261.24.

using the TCLP testing method, if 5.0 mg/L or more of lead can be extracted from debris, the debris would be considered to be toxic and hazardous.

EPA regulates the amount of hazardous substances and waste that can be released into the environment under both CERCLA and SARA. Under these requirements, an owner is required to contain lead-based paint removed from a structure. A response could be initiated at a paint removal project if improper containment of dust or debris results in a release of lead to the environment. A reportable quantity of released leaded waste is 10 lb (4.5 kg). The report must be made to the National Response Center [(800) 424-8802] and to state and local regulatory authorities within 24 hours. The calculations presented in Table 1.13 demonstrate how to estimate the unit area of paint on a bridge surface that would equate to a reportable CERCLA release of lead.

CERLA and SARA regulations are found in 40 CPR 300 through 373. Discharges into the air and water area are also regulated by the CAA and CWA, respectively. EPA has mandated enforcement of regulations to the states, leading to nonuniformity in the procedures to be followed and the stringency of requirements. Permits for blasting are required in some states but not others.

Because of the joint and several liability provision of CERCLA, it is possible that any one generator (or responsible party) may be liable for the entire waste disposal site cleanup. This is true even if there is no negligence on the part of the highway agency or its contractors. Regulatory agencies do not recognize contractual obligations among responsible parties and will seek financial compensation from whoever has funds and can be connected to the contamination.

OSHA also has established several regulations applicable to worker protection during lead paint removal. These regulations are summarized in Table 1.14.

www.EngineeringEBooksPdf.com

TABLE 1.13 Example Calculation of Surface Area Required to Generate a Unit Weight of Lead

Assumptions:
Lead in paint = 1% (10,000 ppm)
Dry film thickness (DFT) = 10 mil (0.010 in)
Density of dried paint = 1.5 g/cm^3 (can range from 1.1 to 2.5)

Calculations:

1. Calculate volume of paint in 1 ft^2 (1 ft^2 = 929 cm^2):
   Volume = 929 cm^2 (DFT × 2.54 cm/in)
   = 929 cm^2 (0.010 in × 2.54 cm/in)
   = 23.60 cm^3
2. Calculate weight of paint in 1 ft^2:
   Paint weight = density × volume
   = 1.5 g/cm^3 × 23.60 cm^3
   = 35.4 g
3. Calculate weight of lead in 1 ft^2 of paint (1 ppm = 1 μg/g):
   Lead weight = ppm lead × paint wt/ft^2
   = 10,000 μg/g × 35.4 g/ft^2
   = 354,000 μg/ft^2
4. Calculate square feet required to generate 1 lb of lead (1 lb = 454 g × 1,000,000 μg/g = 454,000,000 μg/g):
   Area = 1 lb ÷ wt of lead/ft^2
   = 454,000,000 μg ÷ 354,000 μg/ft^2
   = 1282 ft^2

Source: Adapted from K. A. Trimbler, *Industrial Lead Paint Removal Handbook,* 2d ed., Steel Structures Painting Council/KTA-Tator, Inc., Pittsburgh, 1993.

TABLE 1.14 Regulations for Worker Protection during Paint Removal

RCRA regulation	Description
29 CFR 1926	Safety of health regulations for construction
29 CFR 1926.33	Access to employee exposure and medical records
29 CFR 1926.51	Sanitation
29 CFR 1926.59	Hazard communication
29 CFR 1926.62	Lead
29 CFR 1926.63	Cadmium
29 CFR 1926.103	Respiratory protection

1.5.3 Approaches to the Management of Lead-Based Paint on Steel Bridges

A number of methods have been advanced to effectively contain blasting debris and to minimize the amount of waste generated from the management of lead-based paint from steel bridges. These methods are discussed in Art. 1.5.5 of this chapter. They can be broadly characterized as follows.

Deferring Maintenance. This approach does not serve to protect the bridge, and is the least satisfactory approach to protecting the large public investment represented by a major steel bridge.

www.EngineeringEBooksPdf.com

Overcoating. This method consists of applying new layers of nonleaded paint over lead-based paint with the intent of extending the coating system for another 5 years or so. This method may reduce short-term costs and provide an agency more time while new innovations in lead paint removal are being developed. However, worker safety and environmental issues still remain with the structure until the lead-based paint is removed. For example, the volume of unleaded paint increases with each coat, and thus a greater quantity of lead-contaminated paint must be disposed of as hazardous waste in many cases. Additionally, performance of the overcoating products has been highly variable, depending on operator skill and experience, application conditions, existing paint that is being overcoated, and product consistency.

Removal and Repainting. This strategy requires the use of abrasive blasting or other means to remove the existing lead-based paint, followed by application of a coating system. This would provide the most durable and effective protection for steel bridge structures. However, its cost-effectiveness is diminished due to the need to collect and dispose of the spent paint and blasting grit of as hazardous waste. Worker safety during removal is a significant consideration.

Removing and Replacing Steel Members. This strategy involves removing members of the bridge during major rehabilitation efforts; removal of the lead-based paint within an enclosed workplace such as a fabricating shop; repainting, and restoring the members to their original location. Containment of the lead paint and blasting grit is more easily achieved with this approach. This method is generally cost-effective only on major rehabilitation projects.

1.5.4 Worker Protection during Removal of Lead-Based Paint

Workers involved in removal, containment, and handling of lead-based paint must be protected against lead hazards. Blood poisoning has historically been a serious job hazard during bridge painting and likewise dangerous during the removal of lead-based paint. In addition, enclosing the work area to capture the blasting grit and waste paint creates a confined area for the workers, increasing the potential level of exposure and health risk.

Guidance developed by the U.S. Occupational Safety and Health Administration (OSHA) included in its publication *Lead in Construction* identifies proper health and safety procedures to be observed by painting contractors. The procedures generally require training of employees, enclosure of the work area, decontamination of workers, the use of personal protection and monitoring equipment, and decontamination of personnel and equipment when leaving the work space.

Unconfined removal of paint regardless of lead content presents environmental, health, and safety concerns. It has the potential to result in unacceptable deposition of dust and debris in roadways, streams, and communities, as well as presenting a hazard to workers.

1.5.5 Removal Methods and Containment

K. A. Trimbler has described and compared methods of lead paint removal. His findings are summarized in Table 1.15 and described below. (K. A. Trimbler, *Industrial Lead Paint Removal Handbook,* 2d ed., Steel Structures Painting Council/KTA-Tator, Inc., Pittsburgh, 1993, and personal communication, August 2002.)

www.EngineeringEBooksPdf.com

TABLE 1.15 Comparison of Paint Removal Methods

Method and name	Equipment investment[a]	Quality of preparation: Paint removal[b] Flat	Quality of preparation: Paint removal[b] Irregular	Quality of preparation: Rust/mill scale removal[b] Flat	Quality of preparation: Rust/mill scale removal[b] Irregular	Quality for painting[c]	Debris created: Dust generation[d]	Debris created: Volume of debris[d]	Containment required[d]	Production rate[e]
Method 1. Open abrasive blast cleaning with expendable abrasives	2–4[f]	5	5	5	5	5	1	1	1–2	5
Method 2. Open abrasive blast cleaning with recyclable abrasives	1	5	5	5	5	5	3	4	1	5
Method 3. Closed abrasive blast cleaning with vacuum	1	5	3–4	5	3–4	5	4–5	4	4	2
Method 4. Wet abrasive blast cleaning	2–3[f]	5	5	5	5	4–5	4–5	1	2–3	4
Method 5. High-pressure water jetting	2	3–4	2–3	1	1	3–5	5	2–4	2–4	3
Method 6. High-pressure water jetting with abrasive injection	2	5	4–5	5	4–5	4–5	5	2–3	2–4	3–4
Method 7. Ultrahigh-pressure water jetting	1	4–5	3–4	1	1	3–5	5	2–4	2–4	4
Method 8. Ultrahigh-pressure water jetting with abrasive injection	1	5	4–5	5	4–5	4–5	5	2–3	2–4	4
Method 9. Hand-tool cleaning	5	1–2	1–2	1	1	1–3	4–5	4	4	2
Method 10. Power-tool cleaning	4	2–3	2	1–2	1–2	1–3	3–4	4	4	2
Method 11. Power-tool cleaning with vacuum attachment	3	2–3	2	1–2	1–2	1–3	4–5	4	4–5	2

www.EngineeringEBooksPdf.com

Method 12. Power-tool cleaning to bare metal	4	4–5	2–3	4–5	2–3	4–5	3	4	3–4	1–2
Method 13. Power-tool cleaning to bare metal with vacuum attachment	3	4–5	2–3	4–5	2–3	4–5	4–5	4	4–5	1–2
Method 14. Chemical stripping	3–4	3–4	3	1	1	2–5	5	2–3	3–4	1
Method 15. Sponge jetting	2–3	5	5	4–5	4–5	5	4	3–4	3–4	2–3
Method 16. Sodium bicarbonate blast cleaning	2–3	3	2–3	1–2	1–2	3–4	4–5	2–4	2–4	2–3
Method 17. Carbon dioxide blast cleaning	1	2–3	2–3	1	1	3–4	4–5	4	4	1–2
Method 18. Combinations of removal methods	Ratings dependent upon combinations of methods used.									
Method 19. Abrasive blasting with proprietary additive for lead stabilization[g]	2–4	5	5	5	5	5	1	1	1–2	4–5
Method 20. Thermal spray vitrification[g]	1	3–4	2–4	1	1	2–5	4–5	4	3–4	1
Method 21. Laser paint removal[g]	1	3–4	1–2	1	1	2–5	4–5	5	3–4	1

[a]5, very inexpensive; 4, inexpensive; 3, moderately expensive; 2, expensive; 1, very expensive.

[b]5, highly effective; 4, effective; 3, moderately effective; 2, poor; 1, very poor (ineffective).

[c]5, excellent; 4, good; 3, marginal; 2, poor; 1, very poor.

[d]5, no/none; 4, little/low; 3, moderate; 2, sizable; 1, substantial.

[e]5, very high; 4, high; 3, moderate; 2, low; 1, very low.

[f]Most contractors already own much of this equipment. Therefore, even though the purchase price is high, little additional investment may be needed.

[g]Additional methods supplied by K. A. Trimbler, 2002, with ratings for these specific methods developed based on general experience.

Source: From K. A. Trimbler, *Industrial Lead Paint Removal Handbook,* 2d ed., Steel Structures Painting Council/KTA-Tator, Inc., Pittsburgh, 1993, with permission, and personal communication, 2002.

www.EngineeringEBooksPdf.com

Open Abrasive Blast Cleaning with Expendable Abrasives. In this method, compressed air propels blasting grit against the coated surface. The spent blasting grit is then collected for disposal. The major advantages of this method are that contractors are familiar with this long-practiced method, it is very effective in creating a superior surface preparation, it reaches areas otherwise difficult to access, and it is relatively quick (seperate containment considerations). The major disadvantage of this method is that it creates a high level of leaded dust and large quantities of debris that typically must be disposed of as hazardous waste. The additional containment requirements, hygiene training, and personal protection equipment requirements increase the cost of removal.

Open Abrasive Blast Cleaning with Recyclable Abrasives. In this method, metallic abrasives are used to remove the paint. The abrasives can be separated from the debris (paint, rust, mill scale) and reused. The volume of dust and debris is reduced as compared to open abrasive blast cleaning with expendable abrasives, but the effectiveness and the ability to reach inaccessible areas are the same. Additional disadvantages are contractors' unfamiliarity with the method and the special care that must be taken to keep the blasting grit moisture-free to avoid rusting and clumping. Should the abrasive dust escape containment, it may cause rust spots on the surfaces where it settles. Because the grit is recycled, higher concentrations of airborne lead dust within the containment area will have to be considered for worker safety.

Closed Abrasive Blast Cleaning with Vacuum. A third method is to apply a compressed-air propellant from a nozzle fitted with a localized containment assembly that employs a vacuum. The recycled metallic grit, dust, and debris are vacuumed as the surface is blasted. This method is rated as highly effective, both in surface preparation and in containment of dust and debris, but the rate of cleaning is slow. The greatest limitation of this method is that the containment mask must be held tightly to the surface of the structure, reducing the method's effectiveness on irregular and inaccessible surfaces. The containment method confines the blast spray pattern so that only small surface areas are being blasted at any one time. This requirement, along with the need to maintain a tight seal, is arduous and leads to operator fatigue.

Wet Abrasive Blast Cleaning. In the wet abrasive method, water is injected into a stream of slag abrasive propelled by compressed air. This method is effective both in dust control and in the quality of surface preparation; however, the amount of waste produced is substantial and difficult to clean up. Inhalation hazard is greatly reduced with this method, but the potential for ingestion still exists.

High-Pressure Water Jetting. High pressure water (20,000 lb/in^2 or 138 MPa) propelled against the surface is effective without the use of grit. This method reduces dust to negligible levels; however, the potential for ingestion still exists. The water is voluminous and difficult to capture in containment. The method is not effective in removing paint from relatively inaccessible areas or in removing mill scale. A rust inhibitor is usually used as part of this method, which may affect the applied coating.

High-Pressure Water Jetting with Abrasive Injection. Combining the previous method with abrasive injection results in all the advantages and disadvantages of the previous methods but with the additional complication of having grit in the disposal water. It is considered highly effective in removing mill scale and paint from inaccessible areas.

Ultrahigh-Pressure Water Jetting. Even more highly pressurized water (up to 40,000 lb/in^2 or 276 MPa) can be propelled against the surface without the use of grit. This method is more efficient in removing paint than the high-pressure water jetting method; however, the main advantages and disadvantages of the high-pressure water jetting method still apply.

www.EngineeringEBooksPdf.com

Ultrahigh-Pressure Water Jetting with Abrasive Injection. The ultrahigh-pressure water jet method can be enhanced by the addition of disposable abrasives to the jet stream. The result is rated highly effective, with advantages and disadvantages similar to those of the previously described water jetting methods.

Hand-Tool Cleaning. Manually operated impact tools and scrapers can be used to remove paint and mill scale. This method is relatively inexpensive, but is relatively ineffective compared to other methods. Since only small amounts of localized dust and debris are created, workers may have a false sense of security about exposure, thus making it difficult to enforce personal protective equipment requirements.

Power-Tool Cleaning. Power tools such as chippers, needle guns, descalers, wire brushes, sanding disks, and grinding wheels can be used to remove paint, rust, and scale from the bridge surface. This is a labor-intensive method. The resulting quality of preparation of the surface may be inadequate, depending on the condition of the coating being removed. Airborne dust is generated, and workers must be properly protected.

Power-Tool Cleaning with Vacuum Attachment. In another version of the previous method, a vacuum attachment is added around power tools and debris. This has the disadvantage that accessibility in tight areas is reduced because of the shroud and vacuum attachment. On irregular surfaces, a seal may be difficult to maintain, and airborne leaded dust may be present. Because a seal typically minimizes dust, workers may not be aware when it has slipped and they thus require additional respiratory protection.

Power-Tool Cleaning to Bare Metal. Power tools can also be used to clean to the bare metal. This method adds such tools as scarifiers (rotary peening tools) to the power-tool set and can achieve a generally higher level of surface preparation. More dust is created, and higher levels of worker protection and training are required. Productivity is low, and a high quality of surface preparation may not be achieved in inaccessible or heavily pitted areas.

Power-Tool Cleaning to Bare Metal with Vacuum Attachment. A modification of the previous method contains dust and debris using a shroud and a vacuum attachment around the scarifying power tools, creating a seal with the bridge surface. This has the same disadvantages as the method of power-tool cleaning with vacuum attachment, but with additional training required on the equipment and greater cost to achieve bare-metal standards.

Chemical Stripping. Chemical stripping agents can be applied to the surface, left in place for several hours, and then scraped off along with paint, rust, and scale. The surface must then be flushed with water and the chemical agent neutralized. The rinse material must be contained and disposed of properly. This method virtually eliminates airborne debris. Personal protective clothing must be worn during the removal process to prevent dermal contact with leaded debris. However, not all chemicals are effective on all paints, and few will remove all the rust and scale.

Sponge Jetting. In the sponge jetting method, compressed air is used to propel polyurethane particles (sponge) that may be seeded with abrasives against the bridge surface. The debris and sponges are collected and sorted. The sponges can then be reused. The quality of surface preparation is similar to that from other blast cleaning methods, but the productivity is lower. The amount of debris is significantly reduced because of the recycling of the sponges. Visible dust is reduced, although containment and personal protection gear must be maintained as in other blasting methods. Costs of the equipment and abrasives are high.

www.EngineeringEBooksPdf.com

Sodium Bicarbonate Blast Cleaning. Either jetted water or compressed air can be used to propel water-soluble sodium bicarbonate against the bridge surface. This method does not remove mill scale or rust effectively. Dust is significantly reduced when jetted with water, thereby reducing the potential for lead inhalation, but lead ingestion remains a hazard. Containment of the water is difficult. It may be demonstrated on a case-by-case basis that the sodium bicarbonate serves to stabilize lead in the paint so that it does not leach into the water in concentrations great enough to render the blasting water a hazardous waste. There is no grit waste. This method requires inhibitors to prevent flash rust from forming when the paint is removed.

Carbon Dioxide Blast Cleaning. Small pellets of dry ice can be propelled using compressed air against the bridge surface. This method does not remove mill scale or heavy rust, and production is slow. This method reduces the volume of waste to only the actual paint being removed. It also greatly reduces sparking risk, and dust is reduced. Worker exposure is reduced, though it must still be controlled. The equipment and materials for this method are relatively expensive.

Combinations of Removal Methods. Combining methods, if done effectively, may reduce the volume of waste or increase productivity or the quality of surface preparation. The objective is to select methods that are complementary. An example would be first using a chemical stripper, which yields low dust and minimizes the need for containment. The chemicals will remove the leaded paint but not the mill scale. Once the hazardous substances are removed, another method, such as wet blasting, can remove the mill scale and rust without necessitating further hazardous waste disposal.

Abrasive Blasting with Proprietary Additive for Lead Stabilization. The equipment and procedures used are identical to open abrasive blasting, except that the abrasive is preblended with a proprietary material that stabilizes the lead, typically creating a nonhazardous waste for disposal.

Thermal Spray Vitrification. This method involves the application of molten glass to the surface that binds with the coating. Upon cooling, the glass/paint composite cracks, and spontaneously disbonds from the surface.

Laser Paint Removal. This method involves the use of lasers to instantaneously vaporize the paint, turning it into an ash that is vacuumed for disposal.

1.5.6 Containment Considerations

Design of proper containment requires the participation of specialists in structural engineering, coatings, ventilation, and exhaust. The following considerations should be addressed in the development of a containment system:

- The environmental media (air, water, soil) that are vulnerable and the containment methods that will provide the best protection
- Durability
- Compatibility with the selected removal method, and potential for interference with the productive removal of the paint, mill scale, and rust and the application of a new coat of paint
- Ease of construction, disassembly, and moving from one area of the structure to another
- Local climate conditions
- Continued usability of the structure and proximity of nearby structures and people

www.EngineeringEBooksPdf.com

- Cost-effectiveness
- Compliance with applicable regulations

Materials used to construct containments include rigid panels or flexible materials such as tarpaulins. The selected materials should be fire-retardant, given the sparking hazard, high dust, and high ventilation aspects of the procedure.

The checklist provided in Table 1.16 may be followed in designing an appropriate containment system. Various debris-recovery assessment methods are underdevelopment. Some, such as air monitoring and analysis of soil and water samples to evaluate whether

TABLE 1.16 Containment Design Checklist

1. Review drawings and specifications for project familiarity.
2. Investigate OSHA and EPA regulations affecting worker protection and control over emissions.
3. Determine method of surface preparation to be employed.
4. Examine the structure to be prepared:
   - Confirm that the selected method of preparation is suitable.
   - Determine if any coats of paint will be applied in containment.
   - Assess the load-bearing capacity of the structure to support containment.
   - Examine the structure for attachment points for the containment.
   - Divide large structures into logical containment units according to size and configuration. Consider the air movement requirements and the need to have a large enough area for productive surface preparation and painting.
   - Determine if a working platform should be used on elevated projects. Determine how far ground covers should extend beneath or around the removal operation.
   - When working over water, determine if a barge is going to be used for spent abrasive collection or staging, and assess the need for water booms to minimize problems due to inadvertent spills. Determine the need for U.S. Coast Guard approval and navigation restrictions.
   - Determine methods for conveying the debris for recycling or disposal.
5. Determine project-specific ventilation requirements.
   - Consult *Industrial Ventilation: A Manual of Recommended Practice* (Committee on Industrial Ventilation, American Conference of Government Industrial Hygienists, Cincinnati; 20th ed., 1988) for engineering guidance.
   - Select the air velocity (air speed) throughout the work area and exhaust volume required.
   - Determine the necessary transport velocity through the exhaust ductwork required to avoid dropout of debris.
   - Lay out the ductwork as short as practical with as few bends as possible. Do not use bends with a centerline radius less than 2 times the duct diameter. Include the use of exhaust hoods or plenums within containment.
   - Select the air-cleaning device (dust collector) on the basis of the volume of air and dust loading of the airstream (air-to-cloth ratio).
   - Select the fan that will provide an adequate volume of air, and that is able to overcome the resistance throughout the system.
   - Provide adequate makeup air (supply air), properly distributed to provide a uniform airflow. Include properly balanced forced air if required.
   - Confirm that all of the above will provide ample airflow throughout the work area. If not, consider the use of localized ventilation and exhaust.
6. Obtain and review equipment manufacturers' technical information.
7. Complete the design package. Utilize the expertise of structural and mechanical engineers, industrial hygienists, coatings specialists, and equipment specialists.

Source: From K. A. Trimbler, *Industrial Lead Paint Removal Handbook,* 2d ed., Steel Structures Painting Council/KTA-Tator, Inc., Pittsburgh, 1993, with permission.

www.EngineeringEBooksPdf.com

lead content has increased as a result of paint removal activities, have been codified in regulations.

A method for calculating debris recovery that has been used by the South Carolina Department of Transportation is found in the Struchual Steel Painting Council (SSPC) Guide 61, *Guide for Containing Debris Generated during Paint Removal Operations* (SSPC *92-07,* March 1992). The following equation is used in the SSPC guideline for estimating debris recovery:

$$\mathrm{RE} = \frac{W_d}{W_a + W_p} \times 100$$

where RE = efficiency of recovery
W_d = dry weight of abrasive and paint debris collected
W_a = dry weight of abrasive used
W_p = calculated weight of paint to be removed

This estimation procedure has the limitation of not incorporating the weight of the various release media (air, soil, water), which influence the effectiveness of a containment. A 1 percent debris loss into the soil is not as significant as a 1 percent debris loss into the air. Care must be taken when using this method to measure only the abrasive and paint from the project and not to measure soil that may have come into contact with the debris.

The project designer should incorporate an environmental monitoring plan to evaluate the effectiveness of the containment methods. Reporting and record keeping within the plan should include the following data:

- Name and location of the site, along with a site plot plan
- Identification of the individual or company that is conducting the monitoring
- Name and qualifications of the analytical laboratory used
- Criteria and rationale for selecting monitoring and sampling sites and duration of sampling
- Descriptions of sampling and monitoring methods
- Quality assurance and quality control plans
- Examples of reporting forms
- Acceptance criteria
- Reporting procedures and corrective actions if acceptance criteria are not met

1.5.7 Community Relations

Bridges are public structures. Lead poisoning caused by lead-based paint has come to the forefront of public awareness. Any inconvenience to the public due to bridge maintenance calls attention to the structure and ongoing operations. If not handled well, lead-based paint removal from bridges can become a volatile community issue. Some states have passed regulations requiring public notice. The highway agency should be prepared to provide complete, accurate, and current documentation on the safety procedures that are implemented to protect the public health and the environment.

Gaining regulatory agreement with the removal and containment methods will also be valuable in reducing public concern. Adjusting the timing for paint removal activities to be conducted during off-peak hours also serves to diminish the attention that the operation receives.

www.EngineeringEBooksPdf.com

1.5.8 Specifications Guidelines

Specifications for scraping or blasting lead-based paint from structures should be written with worker safety and environmental issues in mind, so that qualified contractors who can adhere to a high level of quality and compliance are selected for the project. These specifications should

- Describe the extent of surface preparation and the degree of containment required and let the contractor propose how to accomplish this.
- Identify key health and safety and environmental regulations to ensure that the contractor is aware of these regulations and plans compliance strategies in the bid.
- Clearly state that the paint to be removed is lead based. The highway department should have had the paint tested prior to contract bid if there is any doubt whether the paint is lead based. The cost differential is too great to make the assumption or let a contract with the lead concentration factor as an unknown.
- Specify how the waste is to be treated, tested, handled, and disposed of.
- Identify the worker protection standards and requirements that the contractor's health and safety plan must meet at a minimum.

1.5.9 Management of Industrial Lead-Based Paint Removal Projects

The following steps have been developed for managing lead-based paint removal projects based on procedures in Trimbler's *Industrial Lead Paint Removal Handbook*.

Initial Project Evaluation. In the initial project evaluation, the owner or specifier must determine whether the coating contains lead-based paint either by reviewing earlier plans and specifications for the structure or by sampling and analysis.

Prebid Assessment of Paint Removal Methods and Debris Generated. The owner or specifiers should estimate how much waste will be generated by methods evaluated to be appropriate to the size and circumstances of the project. Designing a testing program to evaluate the toxicity of waste generated may be appropriate for large paint removal projects.

Understanding the Regulations before Preparing the Specifications. The regulations regarding air quality, water quality, soil cleanup, unauthorized releases, worker protection, and hazardous waste generators should be thoroughly understood. How these regulations are enforced should be discussed with both state and local officials.

Preparing the Project Specifications. Both painting and lead removal requirements should be addressed in the specifications. These should identify the methods for surface preparation and the coating system to be applied. The relevant regulations, the degree of containment, and the evaluation of performance criteria should all be specified.

Developing a Worker Protection Plan. Prior to start-up, the contractor should provide a worker safety plan that addresses exposure monitoring, the compliance program, the respiratory protection program, personal protective equipment, housekeeping issues, hygiene facilities and procedures, medical surveillance, employee removal for exposure

www.EngineeringEBooksPdf.com

to lead, employee training, signage, record keeping, and employees' right to observe and review monitoring information.

Preparing Environmental Protection Monitoring Plans. The procedures developed to verify environmental protection should include high-volume air samplers, tests for visible air emissions (opacity), personal air quality monitors, measurement (and reporting requirements) of unauthorized releases, and pre- and postproject soil quality and water quality sampling.

Developing Procedures for the Control and Handling of Hazardous Waste. Assuming that hazardous waste is to be generated, plans should be developed for identifying the waste, obtaining a hazardous waste generator identification number from the EPA, preparing for proper notification and certifications with each shipment, preparing waste manifests, packaging and labeling waste, implementing contingency plans, conducting waste treatment and analysis for on-site handling, and record keeping.

Designing a Containment and Ventilation Plan. The contractor should develop detailed plans to select appropriate support structures and containment, address ventilation and other worker safety issues, provide emissions control, achieve water and soil protection and debris recovery, and verify the integrity of the containment structure.

Monitoring the Project. The project manager should develop a plan to monitor the adequacy of all of the control measures; visually monitor the project regularly and use approved testing methods to evaluate adequacy of controls; regularly monitor the ventilation system and the integrity of the containment; regularly examine waste storage facilities, and the handling and transportation methods and procedures; and verify worker protection and hygiene procedures. OSHA standards must be observed. Figure 1.2 illustrates a decision tree to aid in the management of lead paint removal.

1.6 RESOURCE RECOVERY AND USE OF WASTE MATERIAL

Given the vast amount of building materials required to construct and maintain the transportation infrastructure in the United States, the country's highway system represents a tremendous opportunity for the beneficial use of reclaimed and recycled resources. However, the reclamation and reuse of waste material must be done in an environmentally responsible manner.

The handling, disposal, and reuse of solid waste is regulated by a number of environmental statutes. Increased cost of complying with these requirements has increased the appeal of recycling and resource management. Because solid waste material is not as uniform as raw materials, the characteristics, performance, cost of preparing, and application of solid waste vary with the source and type of the material. Results in highway applications vary considerably and depend on such parameters as climate, composition, material handling practices, and construction procedures. Factors to be considered when recycling a waste to a highway construction end use include the following [National Cooperative Highway Research Program (NCHRP), Transportation Research Board, Synthesis 199, *Recycling and Use of Waste Materials and By-Products in Highway Construction: A Synthesis of Highway Practice,* Washington D.C., 1994]:

Environmental Threats and Benefits. Along with the considerable environmental benefit of reducing the landfill burden, potential threats to the environment caused by the use of

www.EngineeringEBooksPdf.com

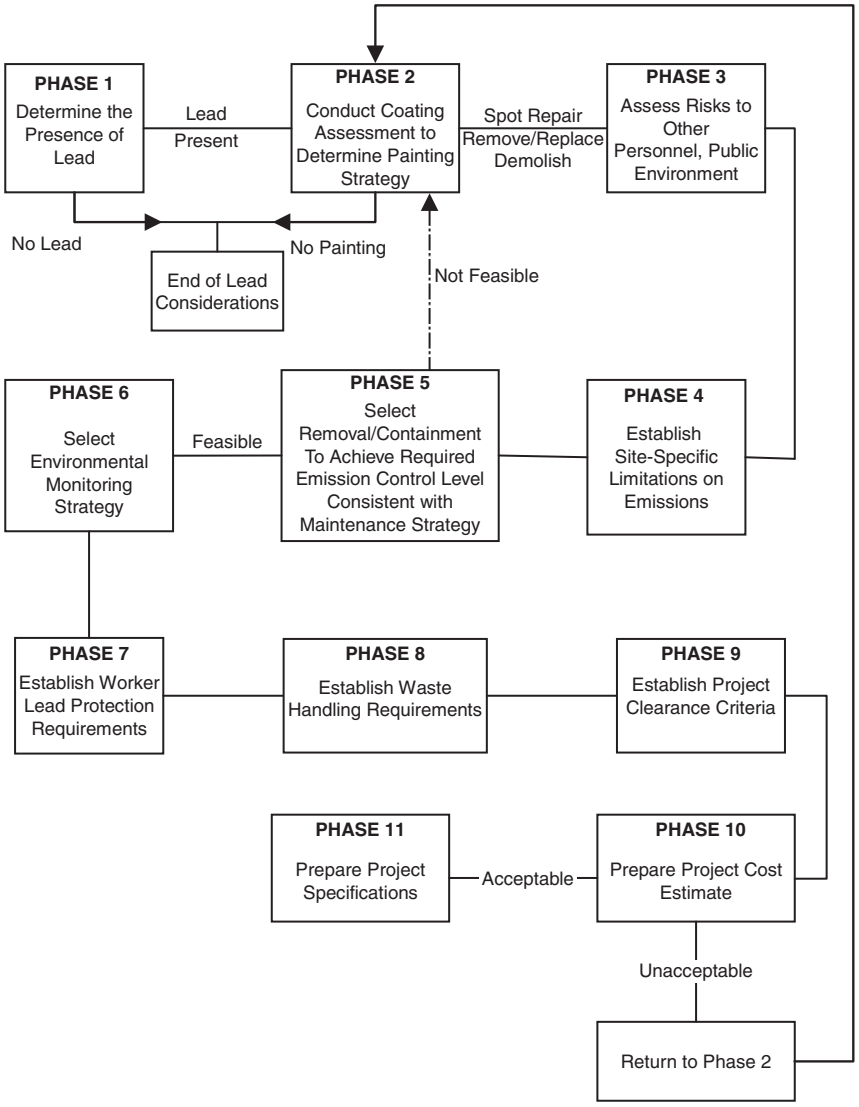

FIGURE 1.2 Decision chart for management of lead paint removal. (*From K. A. Trimbler,* Industrial Lead Paint Removal Handbook, *2d ed., Steel Structures Painting Council/KTA-Tator, Inc., Pittsburgh, 1993, with permission*)

recycled material must be considered and compensated, mitigated, or otherwise overcome before use of recycled material is feasible.

Regulatory Requirements, Guidelines, and Restrictions. The federal and state legislation and guidance regarding recycled materials reflect reduced landfill capacity in the United States and the recognition that there is a net benefit to producing resources from

www.EngineeringEBooksPdf.com

waste. The federal government as well as some states now have recycling mandates in place. Permits are often required when conducting recycling activities, and/or when creating an authorized disposal site in using certain wastes as embankment fill. If the recycling activity falls under the RCRA classification of "use constituting disposal," additional regulations apply.

Economic Cost and Benefit. Economic considerations are often the driving force behind recycling efforts on the county and city level, because of the increased landfilI costs and increasingly limited capacity. Recycling for highway departments may become more attractive as budget cuts increase and the price for recycled waste materials decreases. In some cases, recycled materials extend the service life of highway components, making the life-cycle costs of using such materials attractive.

Engineering Properties and Technical Performance. Because of the variability of the composition of waste materials, performance results for end products may vary significantly, requiring careful evaluation before identifying suitable applications for their use. The primary question is "does the performance of the material compare favorably with the same material constituted from raw materials?" In some instances, the use of waste material has consistently improved performance. For instance, silica fume use in portland cement results in higher compressive strength and higher resistance to corrosion of steel reinforcement due to the increased density and reduced porosity of the resulting concrete. ("Silicon," *Minerals Yearbook,* U.S. Bureau of Mines, Washington, D.C., 1989.)

Construction Materials Shortages and Alternative Resource Availability. Millions of tons of aggregate are used each year in the construction of highways. Resources from existing quarry mining are being depleted and the new sources are often not used because of restrictive regulation and preferred uses of the land. In areas experiencing shortages, recycling construction materials, waste minerals, and other products into aggregate is more cost-effective than shipping aggregate from distant quarries. Steel is one of the most widely recycled materials used in highways. Steel reinforcement can be composed completely of recycled scrap steel, and steel girders can contain as much as 25 percent recycled scrap steel. Recycling scrap steel greatly reduces reliance on foreign sources for raw materials in the steel industry. (NCHRP Synthesis 199, p. 6.)

1.6.1 Legislation Affecting Use of Recycled Material

The Resource Conservation and Recovery Act (RCRA). RCRA classified solid waste management facilities and practices, required states to develop comprehensive state plans for solid waste management (Dufour, op. cit., p. 99). RCRA also emphasized the growing landfill capacity problem and the need to develop approaches to handling wastes. In the preamble of RCRA, attention was called to the vast quantity of recoverable materials that are placed in landfills and to the fact that the recovery or conservation of many of these materials would benefit the United States by reducing projected landfill capacity requirements, retaining and expanding our national resources, and reducing the country's dependence on foreign resources.

In reference to recycled materials, Section 6002 of RCRA requires that federal, state, and local agencies receiving funds from the federal government must procure supplies and other items composed of the highest practical percentage of recovered or recycled materials, consistent with maintaining satisfactory levels of

- Product quality
- Technical performance

www.EngineeringEBooksPdf.com

- Price competition
- Availability

Also, under RCRA, specifications cannot be written to discriminate against materials with recycled constituents. In addition, EPA was authorized to prepare guidelines for recycling, and resource recovery guidelines addressing procurement practices and information on research findings about the uses and availability of recycled materials. Guidelines covering coal fly ash in portland cement, recycled paper, retreaded tires, building insulation, and rerefined oil have been developed. While not specifically required by EPA, the guidelines encouraged most state highway programs to prepare specifications allowing the substitution of fly ash in concrete.

Intermodal Surface Transportation Efficiency Act (ISTEA). ISTEA authorized DOT to coordinate with EPA and state programs in developing information on the economic savings, technical performance qualities, and environmental and public health threats and benefits of using recoverable resources in highway construction. TEA-21 provided technical corrections to ISTEA. ISTEA specifically calls out requirements for the percentage of asphalt pavement containing recycled rubber from scrap tires.

In addition, state legislation has been developing to promote both research into the performance and viability of recycled materials and the procurement of such materials. Many have established mandatory recycling laws and most have used wastes or waste byproducts in their highway programs.

1.6.2 Waste Material Generated

Waste material can be categorized as construction wastes, industrial wastes, mining or mineral wastes, agricultural wastes, or domestic wastes (of which scrap tires are a significant subset). Many advanced recycling programs have been established to make use of these wastes, such as requiring identifying codes for the base resin in plastic products to enable more refined recycling of plastics. Some of these wastes are not suitable for or do not make a significant recycling contribution to highway use. For example, only a small amount of the total crop waste (estimated to be about 9 percent of all the total nonhazardous solid waste generated each year in the United States) has a beneficial highway use. Potential uses are as an asphalt extender or portland cement additive.

In another example, it has been shown that wastes can be rendered essentially benign when used in asphaltic concrete installations. In a demonstration to the Minnesota Department of Transportation, the toxicity of bottom ash from a municipal sewage sludge incinerator was shown to be less than or equal to the toxicity of the asphaltic concrete matrix to which it was attached (Request for Approval of WIA in MnDOT Asphaltic Concrete Non-Wear Course Projects, Final report, S. David, Jan 16, 2002).

The following articles contain brief descriptions of the types of wastes that research has indicated have the potential for use in highway projects (NCHRP Synthesis 199).

1.6.3 Construction Waste

Much construction demolition debris consists of wastes with little recycling value for highways, such as wood and plaster. However, demolition debris also includes concrete, glass, metal, brick, and asphalt, most of which can be reused in highways as aggregate. In order to be a viable resource and meet the standard specifications as aggregate when crushed, the construction and/or demolition rubble must be separated from the other debris and cleaned

www.EngineeringEBooksPdf.com

of detritus. Construction wastes generated and the associated annual tonnage produced are presented below. Tonnage estimates were collected from numerous sources and summarized in NCHRP Synthesis 199.

Reclaimed Asphalt. Asphalt pavement from the demolition of parking lots, roads, and highways can be reclaimed. Most states are making at least some use of reclaimed asphalt pavement (RAP) in highways, with use within asphalt pavement as the most prevalent use. Estimated tonnage of available RAP is 50 million tons annually. Because the use of RAP interferes with the ability to control hot-mix temperatures during formulation, asphalt mixtures can contain only between 20 and 50 percent RAP. Achieving 50 percent RAP content is practical only in a laboratory setting, where thorough blending of the RAP and new aggregate can be controlled. When plant efficiency is a concern, 50 percent RAP in hot mix is not practical. The differential between the temperature of the discharged gases and the discharged asphalt mix reaches 70°F (21°C). High exhaust gas temperatures can lead to premature corrosion of plan equipment. Thus the percentage of RAP that can be incorporated efficiently is based on the plant efficiency that can be maintained. (U.S. Army Corps of Engineers, *Hot-Mix Asphalt Paving Handbook*, AC 150/5370-14, July 1991, Appendix 1, pp. 1–21, and 2–45.)

Reclaimed Concrete Pavement (RCP). The recycling of concrete pavement began in this country many years ago, first as unbound aggregate, then in asphalt-wearing surfaces, and later as concrete aggregate. Improved methods of breaking up concrete and separating out the rebar have made the use of RCP more cost-competitive. Many states now recycle concrete pavements either as new concrete or as aggregate in subbase material or base course. This does not include demolition debris of concrete structures.

Roofing Shingles. Scrap and leftover materials from composite shingle manufacturing operations results in a large quantity of waste annually. The waste includes fragments, asphalt binder, and granules. These wastes can be recycled as asphalt paving material. Shingle waste from roofing contractors and demolition operations is less viable because of possible contamination.

Sandblasting Residue. Many uses of sandblasting grit are possible if the removed paint was not lead based. If the paint was lead based or contained other metals, the debris would have to be analyzed to determine if it was nonhazardous before suitable use.

Demolition Debris. Demolition debris is a major component of waste. Much of this debris can not be received in municipal landfills. To be viable for recycling, the debris has to be separated into homogeneous materials. Rubble material has many recycling uses in highways. Wood debris can be chipped and used for lightweight fill and mulch, but only if it is untreated. Disposing of asbestos-containing material (ACM, prevalent in buildings constructed before 1979) is difficult because chrysotile asbestos fibers are known to increase cancer risk if inhaled. If demolition of buildings with ACM from state transportation right-of-way is required in a project, it is possible in some states to arrange for on-site disposal in a state-monitored landfill.

1.6.4 Industrial Waste

Approximately 150 million tons (136×10^9 kg) of industrial waste of the type that can be potentially reused to some degree in highway projects is produced annually in the United States. Little of this waste can be landfilled. Many kinds of industrial wastes are not

www.EngineeringEBooksPdf.com

suitable for highway use because they are hazardous or because leachate from these materials are a threat to the environment. Through treatment, some industrial wastes otherwise deemed a threat to the environment may be rendered usable. Petroleum-contaminated soils, for instance, once thermally treated, can be used as fill material and have been used in asphalt mixtures as fine aggregates. Petroleum-contaminated soils are not currently being recycled into highway projects but have been used on road and street construction at the local level. The principal recoverable wastes from industrial activities are described below.

Coal Ash By-Products. NCHRP Synthesis 199 cites an American Coal Ash Association publication, (*Coal Combustion By-Product Production and Consumption. 1992*) when noting that 66 million tons (60×10^9 kg) of coal ash is produced annually from the 420 coal-burning power plants across the country. Coal is either anthracite, bituminous, or lignite (subbituminous); the particular form has a bearing on the characteristics of the by-products.

Fly Ash. ASTM divides fly ash into two classes: class F, from anthracite coal; and class C, from lignite coal. Class F fly ash reacts with calcium and water at ordinary temperatures to form a cementlike compound. Class C fly ash has a higher lime content than class F fly ash and can be self-setting. To be usable as a cementitious substitute for Portland cement, fly ash must meet quality standards established by ASTM (Standard C-618). Approximately 25 percent of the fly ash produced meets this standard, yet only about half of the viable resource is being used.

Bottom Ash and Boiler Slag. Bottom ash and boiler slag are also by-products of coal burning, amounting to approximately 18 million tons (16×10^9 kg) of waste produced annually. These by-products are being researched for use in embankments, unbound aggregate, and asphalt paving and antiskid material.

Blast-Furnace Slag. Slag that is the by-product of producing iron in a blast furnace is nonferrous and consists of silicates and aluminosilicates of lime. Of the three types of slag produced from blast furnaces (expanded, granular, and air cooled), about 90 percent of that recovered for use in construction is air cooled. Air-cooled slag is porous and suitable for use as aggregate in lightweight concrete, in asphalt, in roadway bases, and in fill material. Granulated slag can be finely ground as slag cement, and expanded slag can be used as aggregate in lightweight concrete. The primary barrier to use of slag is that it was not separated into homogeneous piles and it was mixed with steel slag.

Steel Slag. Steel slag is the product of lime flux reacting with products in a steel furnace such as pig iron. Steel slag consists of calcium, iron, unslaked lime, and magnesium. It can be very expansive if not properly "aged" through treatment with water. Because of its characteristics of being very hard, stable, and abrasion-resistant, it is used in paving material and snow control. It is heavier than most aggregate and has been used as fill material and as railroad ballast. However, some concern has developed recently that the leachate from these two uses clogs drains and can affect receiving waters. About 7.9 million tons (7.2×10^9 kg) of steel slag is sold in the United States annually.

Nonferrous Slag. Slag from smelting operations for other ores such as copper, lead, zinc, nickel, and phosphates is grouped together under a single heading. Each must be evaluated and treated separately because of the varying properties these slags possess. Phosphate slag, copper oxide blasting slag, and zinc slag have been used as aggregate in paving mixtures. Aluminum slag has been used experimentally for asphalt paving aggregate, but the material proved not to be durable and is no longer used.

www.EngineeringEBooksPdf.com

Foundry Wastes. It is estimated that 3 million tons (2.7×10^9 kg) of foundry wastes are produced annually in the United States, including furnace dust, arc furnace dust, and sand residue. Foundries are concentrated primarily in the Great Lakes states. Foundry dust is often disposed of as hazardous material because of its high concentration of metals. Foundry sand, however, is not generally hazardous and has been used as fill material, pipe bedding, and fine aggregate in paving mixtures. Tests must be conducted on the material prior to reuse to determine the properties of the leachate and to ensure that it is environmentally safe. Research into the use of foundry sand is being conducted by departments of transportation in five states, and its use has met with limited success. The permanence of foundry sand as pipe bedding in Illinois, however, was not considered acceptable.

Flue Gas Desulfurization Sludge. Flue gas desulfurization sludge (FGD) is the product of wet scrubbing of flue gases at coal-burning plants and consists of calcium sulfate or sulfite slurry. These slurries are generally landfilled. By dewatering FGD (especially the sulfate slurries) and blending it with a reactant such as portland cement, or cement fly ash, the mixture can be used as stabilized base material or as fill material. FGD has also been used as a dust control palliative, and additional uses are being investigated.

Paper Mill Wastes. Inorganic paper mill sludge has been used occasionally for dust control on highway projects. Although research has indicated that spent sulfide liquor from the paper milling process may have application in soil stabilization, it is believed that a higher level of use exists for the material within the paper industry. The ash residue from burning bark at paper mills, when pulverized with coal and burned, has been shown to be as effective a portland cement substitute as class F fly ash and is being considered for use in highway projects.

1.6.5 Mining Waste

Coal Refuse. Coarse coal refuse from mining operations is produced at a rate of 120 million tons (109×10^9 kg) per year. Coarse material is banked, while fine coal refuse is put into a silt-sized slurry mix and placed in impoundments. It is estimated that up to 4 billion tons (3.6×10^{12} kg) of coal mining refuse has accumulated in the United States. Concern about spontaneous combustion and leachate of the material (composed of slate and shale with sandstone and clay mixed in) has impeded in-depth studies of the use of coal waste. It is currently being evaluated for use in embankments and as subbase material, two applications that reportedly have been used in the past.

Quarry Wastes. Fairly consistent wastes consisting of fines from stone washing, crushing, and screening and wet, silty clay from washing of sand and gravel are produced from quarrying operations. Most quarry waste is not reusable or sized within standard specifications, are stockpiled in ponds. Reclamation through dewatering and segregating coarse and fine materials would be necessary to use the 175 million tons (159×10^9 kg) of quarry waste produced each year, or any of the approximately 4 billion tons (3.6×10^{12} kg) that have accumulated in the United States. The mineral properties and characteristics of the waste differ from quarry to quarry, limiting the beneficial end use, but quarry wastes have been used as fill and borrow material, flowable fill, and cement-treated subbase.

Mill Tailings. Mill tailings are the remains left after processing ore to concentrate it. Large amounts of mill tailing are generated from copper, iron, lead, zinc, and uranium ores.

www.EngineeringEBooksPdf.com

They have been used as fill materials, in base courses, and in asphalt mixtures for years in areas where they are abundant and conventional sources are limited. Because of the metal content in the mill tailings, the stockpiles must be carefully analyzed to characterize leachate properties before use would be is deemed appropriate.

Waste Rock. Surface mining operations and subsurface mining operations produce an estimated 1 billion ton of waste rock annually in the United States. Some have been used as construction aggregate and in embankments; however, transportation costs from remote mines to construction areas often render the use of the rock economically infeasible. Where transportation is reasonable, waste rock can be used as stone fill for embankments or as riprap, or crushed for aggregate. These uses have been shown to be successful. Environmental considerations of leachate, low-level radiation, and sulfuric acid content should be investigated before use is deemed appropriate.

1.6.6 Agricultural Waste

Recycled agricultural waste has potential for use in many applications not related to highways. Uses of agricultural wastes (with a few notable exceptions) in highways are usually restricted to landscaping applications. It is estimated that more than 2 billion tons (1.8×10^{12} kg) of agricultural waste is produced each year in the United States. This represents about 46 percent of the total waste produced in the United States each year.

Animal Manure. Animal manure is produced at a rate of 1.6 billion tons (1.5×10^{12} kg) annually in the United States. Other than its use as fertilizer or as composting material for landscaping rights-of-way, it has little recycling value for highways.

Crop (Green) Waste. Of the 400 million tons (363×10^{9} kg) of crop waste produced annually from harvesting operations and grain processing, the potential to use rice husk ash to increase compressive strength in concrete is the most promising highway use. Research has also been conducted into converting cellulose waste to an oil appropriate as an asphalt extender.

Logging and Wood Waste. It is estimated that about 70 million tons (64×10^{9} kg) of lumber waste from logging and milling operations is produced each year. Only about one-third of the wood from logged trees is used as lumber. Much of the remainder is used in other industry applications. Uses in highways include mulching and lightweight fill material for embankments or to repair slides. Application as lightweight fill material has been well documented and proven to be successful. Life expectancy of such embankments is estimated at 50 years.

1.6.7 Domestic Waste

It is estimated that approximately 4 lb of domestic refuse is generated every day for every person in the United States, of which about 3 lb (1.4 kg) per day goes to domestic land-fills and 11 percent is recycled. It is estimated that about 185 million tons (168×10^{9} kg) of domestic waste is generated per year in the United States. Several of these wastes have a potential for reuse in highways.

Refuse. Landfill refuse is not sought for reuse in highway construction because there is little homogeneity among landfill refuse, and so a great deal of analysis and separation

www.EngineeringEBooksPdf.com

would be required at individual landfills to determine the potential for use. However, there have been occasions when a highway right-of-way traverses a landfill. In such cases, analysis to find appropriate on-site placement of the refuse instead of costly relocation and disposal has been found to be cost-effective. The refuse was spread in thin layers and compacted into embankment material or used for raised medians.

Paper and Paperboard. Approximately 40 percent of the domestic waste generated in the United States is paper or cardboard. Approximately 25 percent of the wastepaper products are recycled each year and used primarily in making more paper, cardboard, and related materials. A highway use of wastepaper, particularly slick paper such as magazine paper, is in the production of mulch material.

Yard Waste and Compost. There are over 1400 yard waste composting stations in the country. Yard waste is banned completely from landfills in many states. Compost material must meet pathogen control, pH, metal concentration, nitrogen ratio, water-bearing capacity, maturity, particle size, and nutrient content control standards set by the EPA. Compost materials are used for mulching, soil amendment, fertilizers, and erosion control. Concerns related to leaching potential, odors, worker health and safety, long-term exposure, and public acceptance have limited use in highways to the experimental stage, except in landscape use.

Plastics. The amount of plastic waste generated each year is growing. Recycling plastics is complicated in that plastics are developed from at least six different resin bases, which must be sorted for the most-effective recycling. About 30 percent of the plastics made from polyethylene terephthalate (PET), the resin base of soda bottles, is recycled. One use of PET is as a geotextile. Low-density polyethylene (LDPE) resin from film and trash bags can be recycled into pellets for use as an asphalt modifier in paving mixes. High-density polyethylene (HOPE) from milk jugs has been used in manufacturing plastic posts. Reuse of commingled plastics is more difficult but has been applied in fencing and posts. Such plastics have also been used as traffic delineators.

Glass. The amount of glass containers produced each year is declining, but about 12.5 million tons (11.3×10^9 kg) of glass is disposed of as domestic waste each year. To be reused in glass manufacturing, glass must be sorted according to color. Uses in highways include as fine aggregate in unbound base courses, as pipe bedding, as aggregate in asphalt mixes, and as glass beads in traffic paint.

Ceramics. Ceramic waste consists of factory rejects and discarded housewares and plumbing fixtures. Only in infrequent instances are large quantities of waste ceramics available for reuse in large applications, such as highway projects. In California, crushed porcelain has been used as an unbound base course aggregate. Crushed porcelain has been found to meet or exceed quality requirements for concrete aggregate.

Incinerator Ash. Incinerator ash results from the burning of municipal waste. About 26 million tons (24×10^9 kg) of incinerator ash is produced each year, of which 90 percent is bottom ash and the remainder is fly ash. Fly ash often exceeds regulatory limits for concentrations of lead and cadmium. Fly ash is most often mixed with bottom ash, and this mixture generally does not contain sufficient concentrations of metals to render it hazardous. Incinerator ash has been used successfully as a partial replacement of coarse aggregate in asphalt mixtures, as roadway fill, and in base course construction when stabilized with Portland cement. Concerns on the part of the EPA about the leaching of heavy metals have initiated several studies.

www.EngineeringEBooksPdf.com

Sewer Sludge Ash. More than 15,000 municipal wastewater treatment plants in the country produce over 8 million tons (7×10^9 kg) of dry solids of sewage sludge. Following dewatering, sludge cake contains between 18 and 24 percent solids consisting mostly of nitrogen and phosphorus, but may be contaminated from various wastewater streams. Much of this sludge cake is incinerated, producing about 1 million tons (0.9×10^9 kg) of ash a year. Sludge ash has the potential for use as an asphalt filler and use in brick manufacturing. Studies indicate that with heat treatment, the ash can produce lightweight pellets that can increase concrete compressive strength by 15 percent when replacing aggregate. Sewage sludge ash has been used as a mineral filler in asphalt paving in Iowa, Minnesota, and other states. Sewage sludge can be composted for agricultural uses such as soil amendments, compost, or fertilizer. Recycled municipal sewage sludge can be a health and safety concern for highway workers using it in landscaping.

Scrap Tires. In 1994, NCHRP published findings of a 5-year review and synthesis of all of the states' highway practices involving the use of waste tires. This document, entitled *Uses of Recycled Rubber Tires in Highways,* is the result of a compilation of over 500 sources of information on the topic. The discussion in this section is a synopsis of the information provided in that document. A copy of the document can be obtained through the Transportation Research Board of the National Research Council 2101 Constitution Avenue NW, Washington, DC 20418.

It is estimated that 2 to 3 billion waste tires have accumulated in the United States, about 70 percent of which are dumped illegally throughout the countryside or disposed of in unauthorized, uncontrolled stockpiles. Also, scrap fires account for about 2 percent of the solid waste that is disposed in regulated landfills. Each year an additional 242 million more scrap tires add to the nation's solid waste dilemma. Scrap tires are regulated under RCRA Subtitle D as a nonhazardous waste. However, if they are burned, the resulting residue, which may consist of oils, carbon black, and metal-concentrated ash, may be hazardous. In addition, leachate from tire-based products may also be a hazardous or toxic concern. Potential uses of scrap tires in highways and related facilities are numerous.

Table 1.17 identifies the uses of tires in transportation facilities in several states. The environmental implications of the use of scrapped tires in pavement are issues of emissions from the manufacture and placement of rubber asphalt. Leachate is also a major concern, particularly of metals (arsenic, barium, cadmium, chromium, lead, selenium, and zinc) and PAHs (polyaromatic hydrocarbons). A Minnesota study conducted in wetland areas concluded that the use of waste tires in asphalt-rubber pavements may affect groundwater quality. The study's results were comparable to two other studies with regard to metal leachates, but PAH leachate concentrations were not confirmed by the other studies. Mitigation measures suggested in the Minnesota study would be to place tire materials only in unsaturated zones of the subgrade or fill areas and not below the water table or within surface water boundaries. A Wisconsin study that scrap, shredded, and crumbed tires were not hazardous, nor did they release significant amounts of priority pollutants. Several studies have indicated that the emissions in asphalt-rubber operations are not significantly higher than with conventional asphalt concrete. The one exception to this may be the release of methyl isobutyl ketone, which appears to be consistently slightly higher than with the conventional mixture. The results of these studies should be used with caution, in that the tires from which asphalt rubber is made are not of the same chemical composition, and are continuing to change. The rubber-asphalt formulation process also varies significantly, changing the emissions and leachable properties of the asphalt rubber. Comparison difficulties are compounded in that the composition and

www.EngineeringEBooksPdf.com

TABLE 1.17 Uses of Scrap Tires in Transportation Facilities

Type of use	State	Description of use	Advantages	Concerns
Erosion use	California	Shoulder reinforcement Channel slope protection	Disposal Low cost Erosion control	Visual acceptance by public Labor intensive Cost
		Windbreaks	Availability of tires	
	Louisiana	Slope reinforcement	Disposal	Pull-out values
	Pennsylvania	Pending project		
	Vermont	Side slope fill	Disposal Flatten side slope	Unloading Leachate Cost
	Wisconsin	Experimental project		
Retaining wall	California	Anchored timber walls		
	North Carolina	Experimental retaining wall		
	Rhode Island	Experimental retaining wall		
Membrane	Arizona	Membrane to control expansive subgrade soils Shoulder membrane Ditch membrane	Less moisture fluctuations Seal out moisture Prevent cracking Ride quality Lower maintenance cost	
	California	Routine use		
	Oregon	Routine use		
	Washington	Routine use on bridge decks		
	Wisconsin	Experimental use		

www.EngineeringEBooksPdf.com

Safety hardware	Colorado	Experimental project		Tires become projectiles
	Connecticut	Tire-sand inertial barrier	Disposal Low cost Maintenance	Debris Deceleration of vehicle
	Oregon	Bases for tubular markers		
	Pennsylvania	Pending projects		
	Texas	Bases for vertical panel supports		
Railroad crossings	Oregon	Routine use	Ease of installation Smooth Reduced maintenance Potential reuse	
	Pennsylvania	Experimental only		
Valve box coverings	Oregon		Ease of installation Reduced maintenance Easy to adjust Durability	
Planks and posts	California	Laminated tires for planks and posts	Strength	
	Ontario	Sound barrier walls	Durability Lightweight Sound loss	Burning Smoke
Drainage material	Pennsylvania	Aggregate drain rock replacement	Water-draining Stable roadway	Leachate
Culvert	Vermont	Whole tires bound together to form culvert	Cost	
Interlocking block	Minnesota	Erosion control, safety barriers, retaining walls, dikes, levees	Ease of installation Shock absorbing Resist chemical damage Durability	

Source: Adapted from *Uses of Recycled Rubber Tires in Highways,* National Cooperative Highway Research Program (NCHRP), Transportation Research Board, Washington, D.C., 1994.

www.EngineeringEBooksPdf.com

TABLE 1.18 Highway Uses of Scrap Tires

Common uses	Innovative uses
Fills and embankments	Railroad grade crossing
Erosion control	Valve box coverings
Shoulder stabilization	Drainable materials
Channel slope protection	Planks and posts
Windbreak	Culverts
Side slope fill	Interlocking blocks
Slope reinforcement	
Retaining wall	
Membranes	
Safety hardware	
Tire-sand inertial barrier	

Source: Based on National Cooperative Highway Research Program (NCHRP), Transportation Research Board, *Uses of Recycled Rubber Tires in Highways,* Washington, D.C., 1994.

formulation processes for the conventional concrete asphalt that is being used for a standard vary tremendously also. Common and innovative uses of scrap tires are summarized in Table 1.18.

1.6.8 End Uses in Highways

It is apparent that there are many uses of recycled materials in highway construction and related applications. Table 1.19 provides a summary of these uses for reference.

1.6.9 Recycling Hazardous Wastes

Under Subtitle C of RCRA, EPA has the authority to regulate recyclable hazardous waste material. It is critical to determine the type of waste and the proposed method of recycling in determining whether it is regulated under Subtitle C. The definition of solid waste under Section 261.2 identifies four types of recycling activities for which recycled wastes may be subject to Subtitle C regulation: use constituting disposal, burning waste-derived fuels for energy recovery, reclamation, and speculative reclamation.

Use Constituting Disposal. Use constituting disposal is defined as placing or applying a solid waste or a material contained in a product that was a solid waste on the land in a manner constituting disposal. In this case, land disposal regulations under RCRA Parts 264 and 265 apply. Use constituting disposal may include the following uses involved in the construction of highways or maintenance of highway landscaping: fill material, cover material, fertilizer, soil conditioner, dust suppressor, asphalt additive, and foundation material.

Burning and Blending of Waste Fuels. Burning and blending would be the applicable method for recycling used oil for fuel in asphalt plants. Used oil is not currently considered a hazardous waste unless it has a characteristic of ignitability, corrosivity, reactivity, or extraction procedure toxicity (ICRE characteristic). If the used oil is mixed with a hazardous waste, it is regulated as a hazardous waste fuel under RCRA, Part 266, Subpart D. Specifications for nonhazardous used oil fuel are described in Table 1.20. Used oils that do

www.EngineeringEBooksPdf.com

TABLE 1.19 Applications of Recycled Materials in Highways

Asphalt: Crop waste and other cellulose material may be reduced to an oil suitable for asphalt extender.
Asphalt paving aggregate: Incinerator ash.
Asphalt mineral filler: Sewage sludge ash, fly ash, baghouse fines, cement kiln dust, lime waste.
Asphalt-rubber binder: Scrap tires.
Asphalt stress-absorbing membranes: Scrap tires.
Asphalt rubberized crack sealant: Scrap tires.
Asphalt aggregate: Mill tailings, phosphogypsum, slag.
Asphalt fine aggregate: Glass and ceramics.
Asphalt cement modifier: Plastic waste.
Asphalt plant fuel: Used motor oil.
Asphalt paving: Bottom ash, boiler slag, blast furnace slag, steelmaking slag, nonferrous slag, reclaimed asphalt pavement, foundry sand, roofing shingle waste, petroleum-contaminated soils (after thermal treatment).
Base course: Glass and ceramic waste, construction and demolition debris, nonferrous slags, reclaimed asphalt pavement, reclaimed concrete pavement, mill tailings.
Pipe bedding: Foundry sand, glass, and ceramic waste.
Borrow material: Quarry waste, construction and demolition material.
Slope stabilization and erosion control: Sawdust and wood waste.
Mulch: Wood waste, paper waste (especially slick, magazine-type paper), compost.
Fertilizer: Animal manure and farm waste.
Embankments: Lumber and wood waste, sawdust and wood chips, recycled sanitary landfill refuse, fly ash, bottom ash, construction and demolition waste, sulfate waste, waste rock, mill tailings, coal refuse.
Cement stabilized base: Incinerator ash, fly ash, bottom ash, advanced SO_2 control by-products, cement kiln dust, reclaimed asphalt pavement, petroleum-contaminated waste (after thermal treatment), coal refuse, and rice husk ash may be used as supplementary cementing material.
Concrete: Incinerator ash from sewage sludge cake as vitrified aggregate or palletized aggregate.
Lightweight fill material: Wood waste, sawdust, chipped wood, scrap tires.
Geotextile: Plastic waste.
Sealant: Scrap tires.
Safety hardware, fencing, signposts: Plastic wastes.
Flowable fill and grout: Quarry waste, fly ash.
Soil stabilization: Fly ash, advanced SO_2 control by-product, cement kiln dust, lime waste.
Antiskid material: Bottom ash, steelmaking slag.
Blasting grit: Nonferrous slags.

TABLE 1.20 Specification Levels for Used Oil Fuels

Specification	Maximum allowable level
Arsenic concentration	5 ppm
Cadmium concentration	2 ppm
Chromium concentration	10 ppm
Lead concentration	100 ppm
Flash point	1000°F
Total halogen concentration (unmixed)	4000 ppm
Total halogen concentration (mixed)	1000 ppm

Source: Adapted from Travis Wagner, *Complete Handbook of Hazardous Waste Regulation,* Perry-Wagner Publishing, Brunswick, Maine, 1988, p. 46.

www.EngineeringEBooksPdf.com

not meet one or all of these specifications and are not mixed with hazardous waste may still be burned in industrial boilers, but they must have an EPA identification number for this activity and must meet a higher standard of reporting than used oil meeting the specifications. A burner of either specification or off-specification used oil fuel must notify EPA of its used-oil-fuel activities and state the location and a general description of the used-oil-management activities. Copies of invoices and waste analysis conducted on the used oil must be maintained for at least 3 years.

Reclamation. Reclamation is the recovery of materials with value from a waste material and involves regeneration of waste material from the reclamation activities. Recovering precious metals from a waste stream (such as silver from x-ray film) is an example of reclamation. When the lead plates from lead-acid batteries are recovered, the activity is regulated under RCRA as reclamation. Use of material as feed stocks or ingredients in the production of a new product is not considered reclamation.

Speculative Accumulation. Any hazardous secondary material is considered a solid waste if accumulated before recycling unless 75 percent of the stockpile is recycled during a calendar year.

www.EngineeringEBooksPdf.com

CHAPTER 2
HIGHWAY LOCATION, DESIGN, AND TRAFFIC

Larry J. Shannon, P.E.
Highway Technical Manager
ms Consultants
Columbus, Ohio

This chapter begins with a description of the overall transportation development process, and then presents comprehensive information on the various elements of highway location and design. Included is the determination of horizontal and vertical alignment, with attention to obtaining proper sight distance and superelevation. The design of roadway cross sections, intersections, ramps, and service roads is addressed. Traffic aspects include an introduction to intelligent vehicle highway systems and the use of high-occupancy vehicle lanes. A presentation on preparation of highway construction plans and organizing CADD drawings is also provided. A list of references, which are noted in the text, concludes the chapter. Some design issues related to roadside safety are also discussed in Chap. 6.

2.1 TRANSPORTATION DEVELOPMENT PROCESS

2.1.1 Statewide Systems Planning

The beginnings of any roadway project involving government money are found in a statewide transportation planning program. The state transportation department develops a set of goals and objectives which take into account social, economic, environmental, and developmental goals of other state, federal, and local agencies. Based on these goals and objectives, the department identifies transportation improvement needs throughout the state. The approach is from a multimodal standpoint; that is, not just highways are considered, but all forms of transportation, including public transportation, railroads, water, aviation, bikeways, and pedestrian ways (Ref. 6).

www.EngineeringEBooksPdf.com

2.1.2 Transportation Programming Phase

In order to evaluate various projects from various parts of the state, information is collected consisting of the following items: transportation inventories, traffic analyses, modal forecasts, future system requirements, levels of service, population data and forecasts, land use inventories, public facilities plans, and basic social, economic, and environmental data. This information comes from various sources, both public and private, is updated on a regular basis, and is used in developing the state's transportation improvement program.

The statewide fiscal program is also considered in developing the plan. Transportation investment, fiscal forecasts, and consideration of expenditure tradeoffs between modes are some of the financial considerations affecting the project selection process.

Public input is sought from regional to local levels. Local and regional planning organizations, as well as private individuals, have a chance to express opinions and provide input to the project selection process. Once all factors have been evaluated, the state announces and publishes its recommended transportation improvement plan. This usually consists of a one-year plan and a five-year plan, with remaining projects grouped under long-range plans.

2.1.3 Project Evaluation

Once projects reach the selected lists, the next phase is project evaluation. This phase will determine which projects can advance to detail design and which will require a more detailed evaluation in preliminary development.

Projects that can advance directly to design phase meet the following criteria:

- No additional right-of-way (permanent or temporary) will be required to accomplish the work and there will be no adverse effect on abutting real properties.
- No major changes in the operation of access points, traffic volumes, traffic flows, vehicle mix, or traffic patterns.
- No involvement with a live stream or an intermittent stream having significant year-round pools, upstream or downstream, in the immediate vicinity.
- No involvement with a historic site.

Examples of these types of improvement are:

- Restoration and/or reconstruction of existing pavement surfaces
- Modernization of an existing facility by adding or widening shoulders
- Modernization of existing facilities by adding auxiliary lanes or pavement widening to accomplish a localized purpose (weaving, climbing, speed change, protected turn, etc.)
- Intersection improvements
- Reconstruction or rehabilitation of existing grade separation structures
- Reconstruction or rehabilitation of existing stream crossings which do not involve any modification of a live stream or otherwise affect the water quality
- Landscaping or rest area upgrading projects
- Lighting, signing, pavement marking, signalization, freeway surveillance and control systems, railroad protective devices, etc.

www.EngineeringEBooksPdf.com

- Minor safety-type improvements, such as guiderail replacement or installation of breakaway sign hardware
- Outdoor advertising control programs
- Bicycle or pedestrian facilities provided within existing right-of-way

All projects that do not fall into the above categories must undergo additional evaluation in a preliminary development phase.

2.1.4 Preliminary Development Phase

Two types of projects are considered here: (1) projects that involve studies outside the existing corridor or where a facility for more than one alternative mode of transportation may be involved, and (2) projects where feasible alternatives are limited to the existing corridor but did not qualify to pass directly to the design phase. The main difference between the two as far as processing is concerned is that the first group has not yet narrowed its alternatives down to feasible alternatives.

In each case, a project inventory is developed. This information includes historical sites; public recreational facilities; school, church, fire, and police districts; proposed development; land use; existing and other proposed transportation facilities; preliminary traffic assignments; and other similar social, economic, and environmental features, which are pertinent to the area under study. Using this information as a guide, all preliminary alternatives are developed together with documentation of the anticipated effects on community, preliminary cost estimates, and other technical considerations. Advantages and disadvantages of each alternative are studied. Where appropriate, coordination with other modes is considered. The "no-build" alternative is also considered and provides a reference point for defining potential beneficial and adverse impacts. Public hearings are held to gain input from the local public in the affected areas. Following an evaluation of all input received, alternatives are weighed and only those considered to be feasible are forwarded to the next step. From this point on, all projects in the preliminary development phase are on the same path.

Among the environmental concerns which must be considered for each alternative are the following (see also Chap. 1):

Air quality. A study of the effect of a proposed transportation improvement on the quality of the air

Historic or prehistoric. A study of the effect of the proposed transportation improvement on historic or prehistoric objects or on lands or structures currently entered into the National Register or which may be eligible for addition to the National Register

Endangered species. A study of the effect of the proposed transportation improvement on rare or endangered plants or animals having national or state recognition

Natural areas. A study of the effect of the proposed transportation improvement on natural areas designated as having regional, state, or national significance

Parks and recreation. A study of the effect of the proposed transportation improvement on publicly owned parks, recreation areas, or wildlife and waterfowl refuges designated as having national, state, or local significance

Prime farmlands. A study of the effect of the proposed transportation improvement on farmlands with high productivity due to soil and water conditions or having other unique advantages for growing specialty crops

www.EngineeringEBooksPdf.com

Scenic rivers. A study of the effect of the proposed transportation improvement on any scenic rivers of state or national significance

Streams and wetlands. A study of the effect of the proposed transportation improvement on streams and wetlands on project and abutting land areas

Water quality. A study of the effect of the proposed transportation improvement on the quality of live streams or bodies of water

The next step is a refinement of feasible alternatives. This requires additional work sufficient to prepare an environment document. This could include such items as approximate construction costs; alignment and profile studies; typical section development; preliminary designs for geometric layout, drainage, right-of-way, and utilities; location of interchanges, grade separations, and at-grade intersections; preliminary bridge designs at critical locations; channel work; air, noise, and water studies; flood hazard evaluations; and other supplemental studies and right-of-way information. Once again, input is sought from the public sector through advertisement and public hearings.

Figure 2.1 shows the corridors for the feasible alternatives for an 11-mi relocation of U.S. 30 in Ohio (Ref. 13). The map is part of a study evaluating crossroad treatment for each alternative. Figures 2.2 and 2.3 show the projected crossroad treatments for the various alternatives. The options are (1) interchange, (2) grade separation, or (3) closing roads with cul-de-sacs. Since the proposed segment will be a limited-access highway, the option of at-grade intersection was not considered. Figures 2.4 and 2.5 show current and 20-year projected traffic volumes for all roadways. These are examples of maps used in the study of feasible alternatives.

After consideration of all the input and comparing the benefits and disadvantages of each alternative, the next step is to make a selection of the recommended alternative. This selection is certified by the state's transportation director. Following approval of the environmental document, the project may proceed to the design phase.

2.1.5 Detail Design Phase

During the detail design phase, various design elements are finalized and construction plans are developed. Project development in this phase can include many intermediate reviews prior to final plan submission. These may include some or all of the following, depending on the complexity of the plan:

Traffic request/validation

Traffic signal warrant analysis

Airway-highway clearance study

Alignment, grade, and typical section review

Conceptual maintenance of traffic review

Structure type study

Retaining wall justification

Service road justification

Preliminary drainage review

Preliminary right-of-way review

Bridge type, size, and location study

Drive review

www.EngineeringEBooksPdf.com

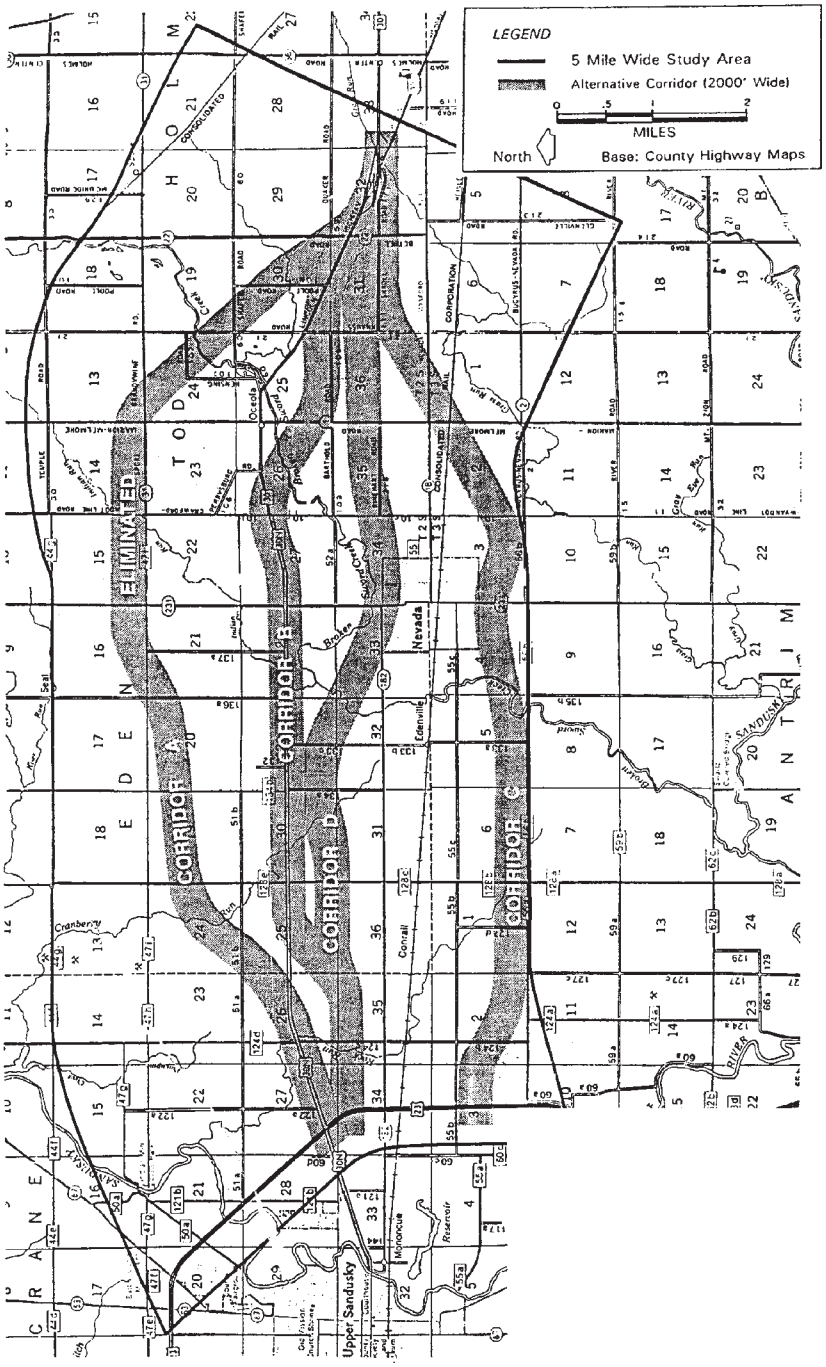

FIGURE 2.1 Example of map used in study of alternate routes showing four possible corridors. Conversions: 5 mi = 8 km, 2000 ft = 610 m. (*From* Justification Study for Crossroad Grade Separations, US 30, *by Balke Engineers for Ohio Department of Transportation, with permission*)

www.EngineeringEBooksPdf.com

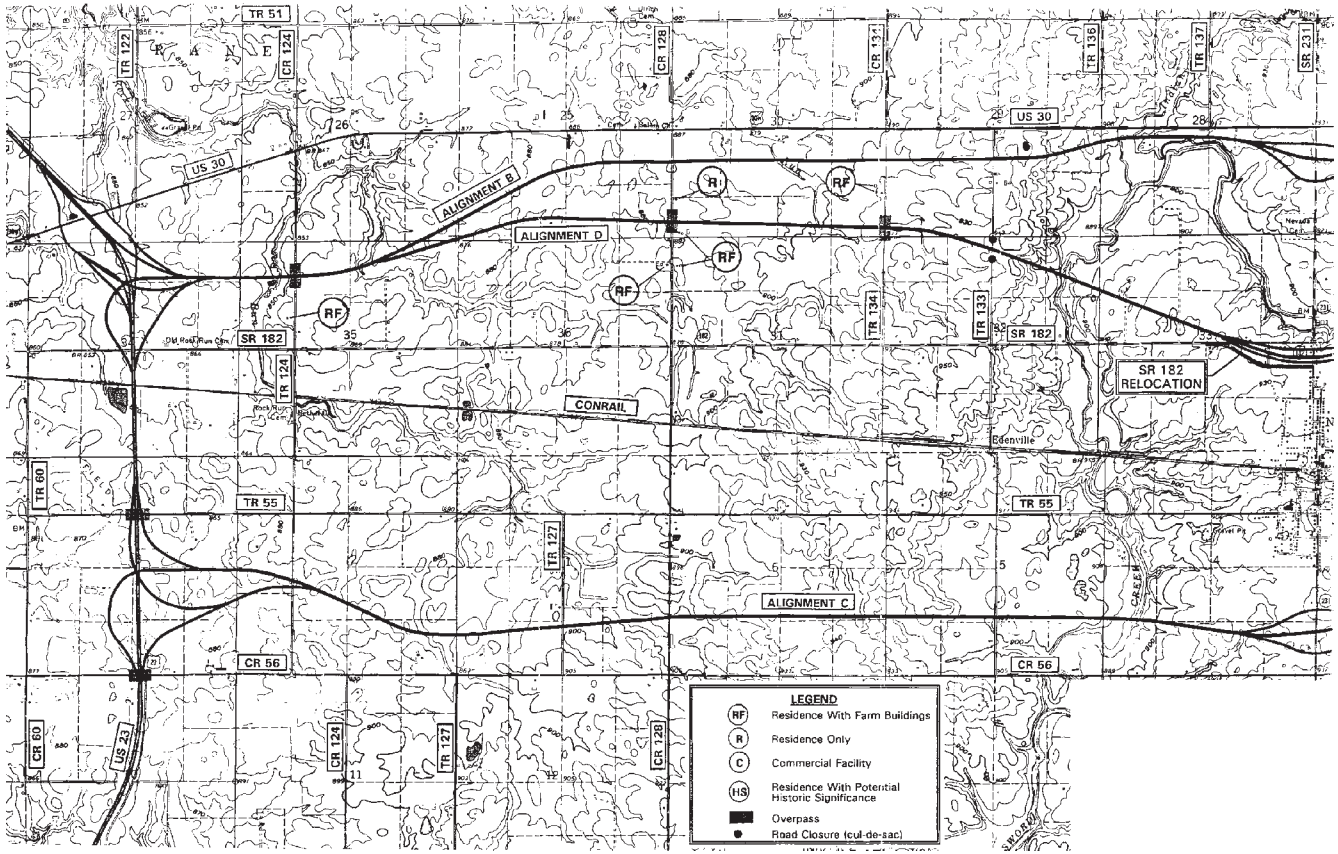

FIGURE 2.2 Example of map used in study of alternate routes showing projected crossroad treatments for western portion of corridor D. (*From* Justification Study for Crossroad Grade Separations, US 30, *by Balke Engineers for Ohio Department of Transportation, with permission*)

www.EngineeringEBooksPdf.com

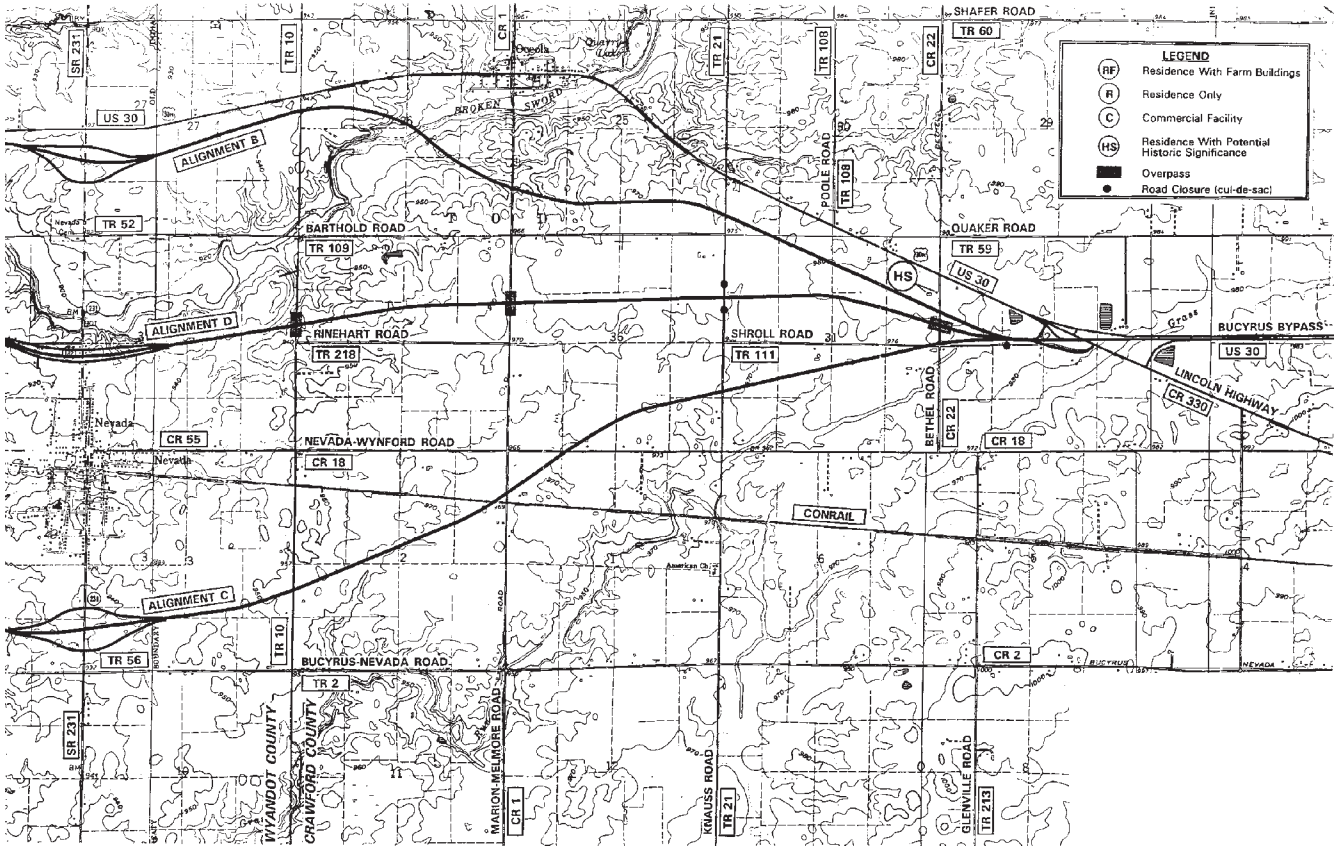

FIGURE 2.3 Example of map used in study of alternate routes showing projected crossroad treatments for eastern portion of corridor D. (*From* Justification Study for Crossroad Grade Separations, US 30, *by Balke Engineers for Ohio Department of Transportation, with permission*)

www.EngineeringEBooksPdf.com

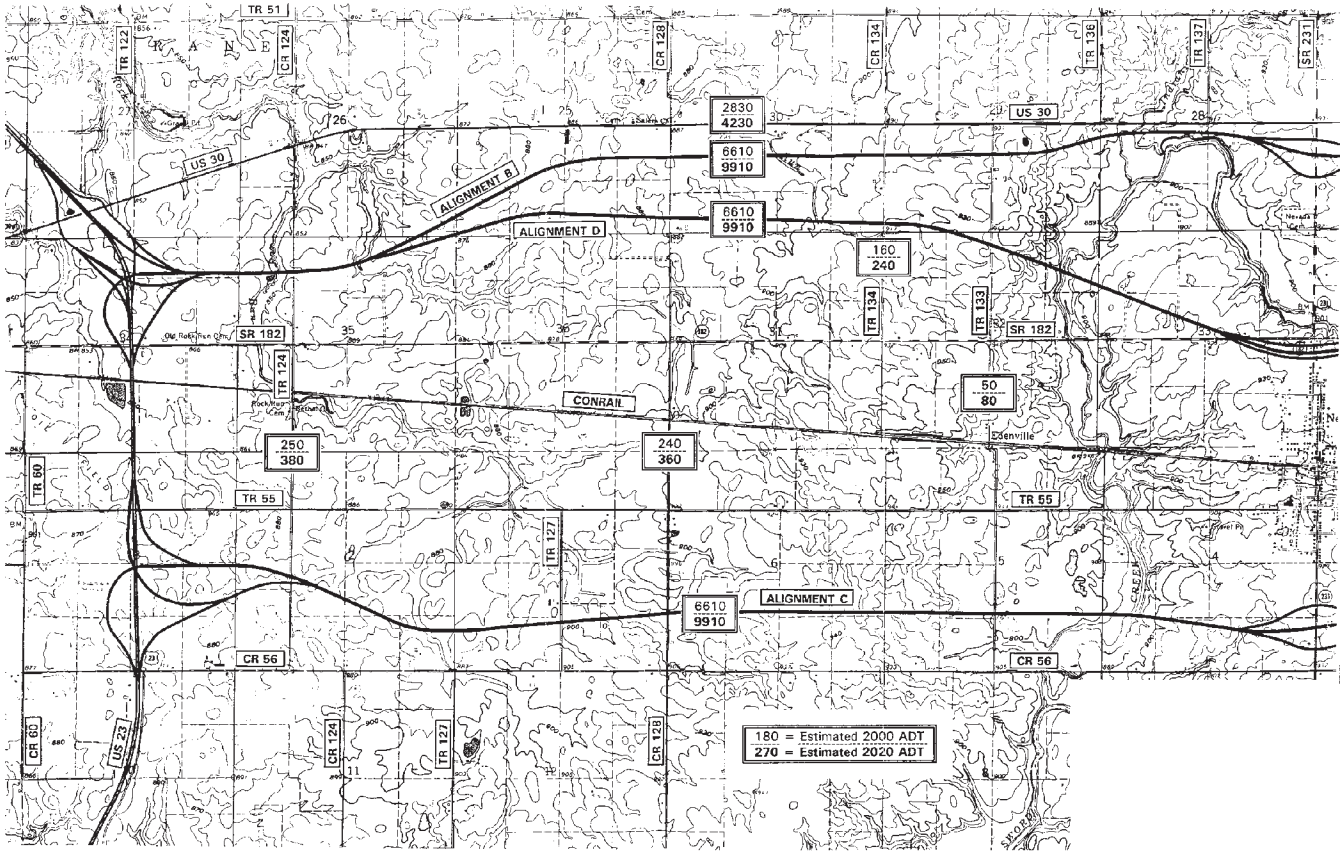

FIGURE 2.4 Example of map used in study of alternate routes showing projected traffic (ADT, average daily traffic, in years 2000 and 2020) for western portion of corridor D. (*From* Justification Study for Crossroad Grade Separations, US 30, *by Balke Engineers for Ohio Department of Transportation, with permission*)

www.EngineeringEBooksPdf.com

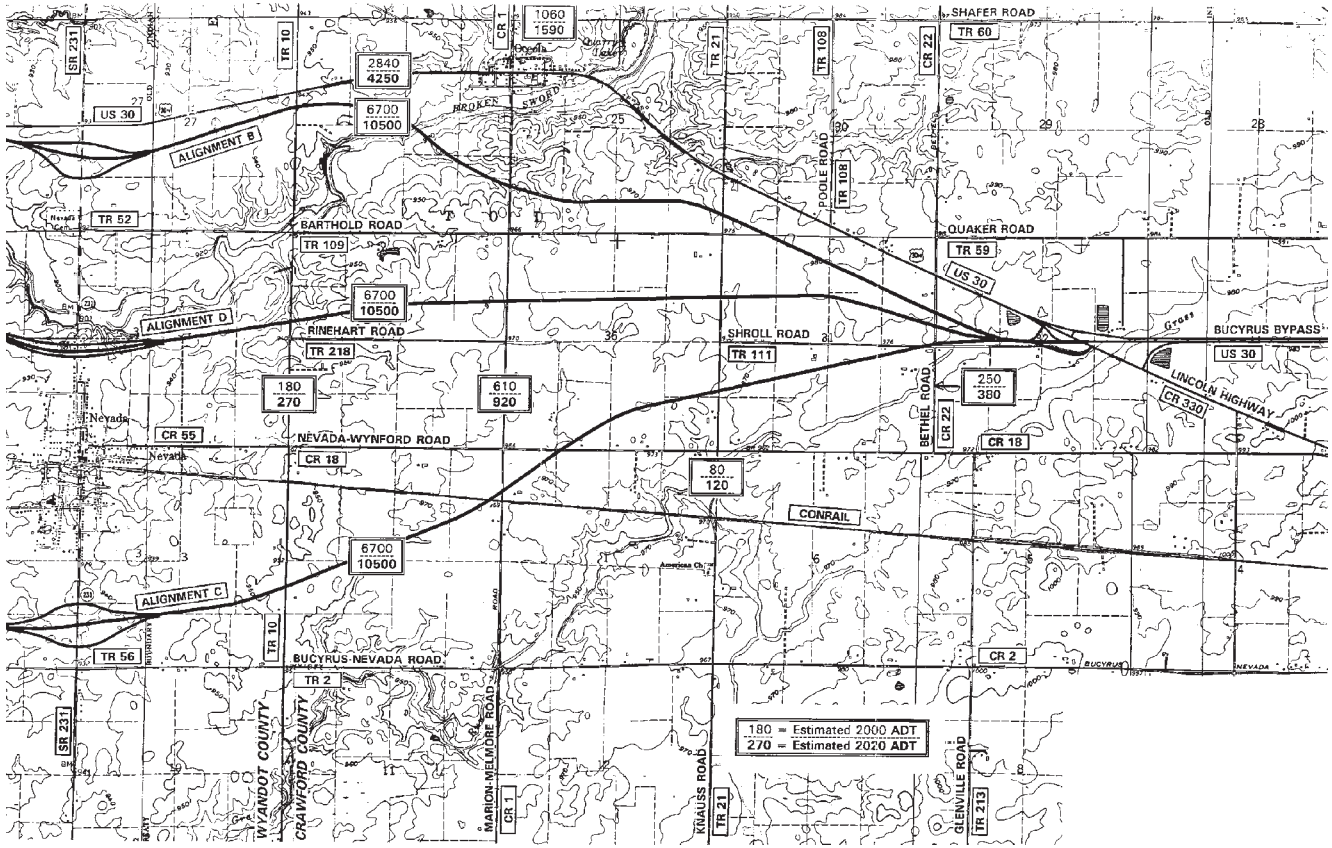

FIGURE 2.5 Example of map used in study of alternate routes showing projected traffic (ADT, average daily traffic, in years 2000 and 2020) for eastern portion of corridor D. (*From* Justification Study for Crossroad Grade Separations, US 30, *by Balke Engineers for Ohio Department of Transportation, with permission*)

www.EngineeringEBooksPdf.com

Slope review
Traffic control
Lighting
Waterline
Sanitary sewer
Final roadway, field and office check

This is not intended to be an all-inclusive list. The designer should contact the government agency having review and final acceptance authority to see what reviews are required during this phase of plan development.

Following acceptance of the final plans, specifications, and estimates, the project is processed for letting. Any necessary consent legislation is obtained. The project is then advertised, bids are taken, and the construction contract is awarded.

2.2 GEOMETRIC DESIGN

2.2.1 Design Controls

Once a route has been selected for a new highway, or a decision has been made to perform major work on an existing facility, the next step is to establish the design controls. The various factors considered for design controls may be generally grouped into five categories: functional classification, traffic data, terrain, locale, and design speed.

Functional classification is a way of grouping roadways together by the character of service they provide. The initial division is between urban and rural roadways. The urban classification may be defined differently in various parts of the country, but one definition is incorporated areas having a population of 5000 or more (Ref. 1). Rural areas are those areas outside of urban areas.

Each of these may be further subdivided into other classifications defined as follows:

Interstate. Roadways on the federal system with the highest design speeds and the highest design standards.

Freeway. An expressway with full access control and no at-grade intersections.

Expressway. A divided arterial highway with full or partial control of access and generally having grade separations at major intersections.

Arterial. A facility primarily used for through traffic, usually on a continuous route.

Collector. An intermediate roadway system which connects arterials with the local road or street systems.

Local road or street. A road whose primary function is to provide access to residences, businesses, or other abutting properties.

Traffic data are an important foundation in highway design. The information used in design is usually a future forecast on the basis of existing traffic counts and expanded on the basis of normal expected growth in the area or enhanced by estimates of future business, commercial, or residential development. Most highway designs are based on

www.EngineeringEBooksPdf.com

what traffic demands will be 20 years from the current year. Shorter time periods, such as 10 years, may apply to resurfacing projects or other minor repair projects. It is important that within the same jurisdiction traffic data be forecast using the same methods and techniques, in order to ensure similar designs for similar type roadways. This is especially true for roadways in a given state jurisdiction.

The following types of traffic numbers are used most frequently in design:

Average daily traffic (*ADT*). The average number of vehicles using a roadway in a 24-hour period.

Design hourly volume (*DHV*). The estimated number of vehicles using the roadway in the 30th highest hour of the year. This number is generally 8 to 12 percent of the ADT and is used extensively in determining lane widths and shoulder characteristics of the roadway cross section.

Directional design hourly volume (*DDHV*). The estimated number of vehicles traveling in one direction of a two-way roadway in the 30th highest hour of the year. This number must be at least 50 percent of the DHV and is usually in the range of 50 to 60 percent. A higher value would indicate that the roadway is a major link in the commuter network, carrying a heavy inbound load in the morning and reversing that flow in the evening.

Truck percentage (*T*). The portion of the ADT which consists of *B* and *C* trucks. Traffic counts are usually separated according to vehicle type:

P = passenger cars (%)

A = commercial (%), consisting of light delivery trucks, panel trucks, and pickup trucks

B = commercial (%), consisting of semitrailer and truck-trailer combinations

C = commercial (%), consisting of buses or dual-tired trucks having single or tandem rear axles

Traffic counts sometimes group the *P* and *A* vehicles together and the *B* and *C* together.

Terrain is a factor that can significantly influence design features, especially in rural areas. Various categories of terrain are level, rolling, and hilly. They are further described as follows:

Level terrain. Any combination of grades and horizontal and vertical alignment permitting heavy vehicles to maintain approximately the same speed as passenger cars. Grades are generally limited to 1 or 2 percent.

Rolling terrain. Any combination of grades and horizontal and vertical alignment causing heavy vehicles to reduce their speeds substantially below those of passenger cars, but not to operate at crawl speeds.

Hilly terrain. Any combination of grades and horizontal and vertical alignment causing heavy vehicles to operate at crawl speed.

Heavy vehicles are defined as any vehicle having a weight (pounds) to horsepower ratio of 200 or greater (Ref. 1). Crawl speed is defined as the maximum sustained speed heavy vehicles can maintain on an extended upgrade. See Ref. 1 for graphs showing the effect of grades on acceleration and deceleration of heavy vehicles.

Locale describes the character and extent of development in the vicinity. It can be considered commercial, industrial, or residential, as well as rural or urban.

www.EngineeringEBooksPdf.com

TABLE 2.1 Relationship between Design Controls and Design Features

Design features	Design controls				
	Functional classification	Traffic data	Terrain	Locale	Design speed
Lane width, rural	X	X	X		X
Lane width, urban	X			X	
Rural shoulder width, type	X	X			
Urban shoulder width, type	X			X	
Guiderail offset	X	X			
Degree of curve				X	X
Grades	X		X	X	X
Bridge clearances (horizontal and vertical)	X	X			
Stopping sight distance					X
Passing and intersection sight distance					X
Decision sight distance					X
Superelevation				X	X
Widening on curves					X
Rural design speeds	X	X	X		
Urban design speeds	X			X	
Vertical alignment	X		X	X	X
Horizontal alignment				X	X

Source: *Location and Design Manual*, Vol. 1, *Roadway Design*, Ohio Department of Transportation, with permission.

Design speed is defined as "a selected speed used to determine the various geometric design features of the roadway" (Ref. 1). When designing new or reconstructed roadways, the design speed should always equal or exceed the proposed legal speed of the roadway.

Table 2.1 (Ref. 7) shows the relationship of the functional classification, traffic data, terrain, locale, and design speed to the various geometric design features listed on the chart.

It should be noted that there are situations when it will not be possible or reasonable to meet the design standard for a particular feature in a given project. When this occurs, the designer must bring this to the attention of the reviewing authority for approval of what is being proposed, or suggestions on what other course of action to take. A design exception must be approved by the reviewing authority when a substandard feature is allowed to remain as part of the design. In this way, it can be documented that this was not an error or oversight on the part of the designer and that every effort has been made to provide the best design possible in the given situation.

2.2.2 Sight Distance

A primary feature in the design of any roadway is the availability of adequate sight distance for the driver to make decisions while driving. In the articles that follow, the text contains conclusions based on information contained in Ref. 1. Derivation of formulas and references to supporting research are contained in that document and will not be repeated here. The reader is encouraged to consult that document for more detailed background information. The following paragraphs discuss various sight distances and the role they play in the design of highways.

www.EngineeringEBooksPdf.com

Stopping Sight Distance. Stopping sight distance is the distance ahead that a motorist should be able to see so that the vehicle can be brought safely to a stop short of an obstruction or foreign object on the road. This distance will include the driver's reaction or perception distance and the distance traveled while the brakes are being applied. The total distance traveled varies with the initial speed, the brake reaction time, and the coefficient of friction for wet pavements and average tires. The values in Table 2.2 were developed using a reaction time of 2.5 s and a braking deceleration rate of 11.2 ft/s^2 (3.4 m/s^2). The height of eye was taken as 3.50 ft (1.07 m) and the height of the object as 2.00 ft (0.61 m).

When considering the effect of stopping sight distance, it is necessary to check both the horizontal and the vertical stopping sight distance. Horizontal sight distance may be restricted on the inside of horizontal curves by objects such as bridge piers, buildings, concrete barriers, guiderail, cut slopes, etc. Figure 2.6 shows a diagram describing how horizontal sight distance is checked along an extended curve. Both formulas and a nomograph are provided to enable a solution. Many times, where the curve is not long enough or there are a series of roadway horizontal curves, a plotted-out "graphic" solution will be required to determine the available horizontal sight distance.

TABLE 2.2 Stopping Sight Distance (SSD) for Design Speeds from 20 to 70 mi/h (32 to 113 km/h)

Design speed, mi/h	Design SSD, ft	Design speed, mi/h	Design SSD, ft
20	115	46	375
21	120	47	385
22	130	48	400
23	140	49	415
24	145	50	425
25	155	51	440
26	165	52	455
27	170	53	465
28	180	54	480
29	190	55	495
30	200	56	510
31	210	57	525
32	220	58	540
33	230	59	555
34	240	60	570
35	250	61	585
36	260	62	600
37	270	63	615
38	280	64	630
39	290	65	645
40	305	66	665
41	315	67	680
42	325	68	695
43	340	69	715
44	350	70	730
45	360		

Conversions: 1 mi/h = 1.609 km/h, 1 ft = 0.305 m.

Source: *Location and Design Manual*, Vol. 1, *Roadway Design*, Ohio Department of Transportation, with permission.

www.EngineeringEBooksPdf.com

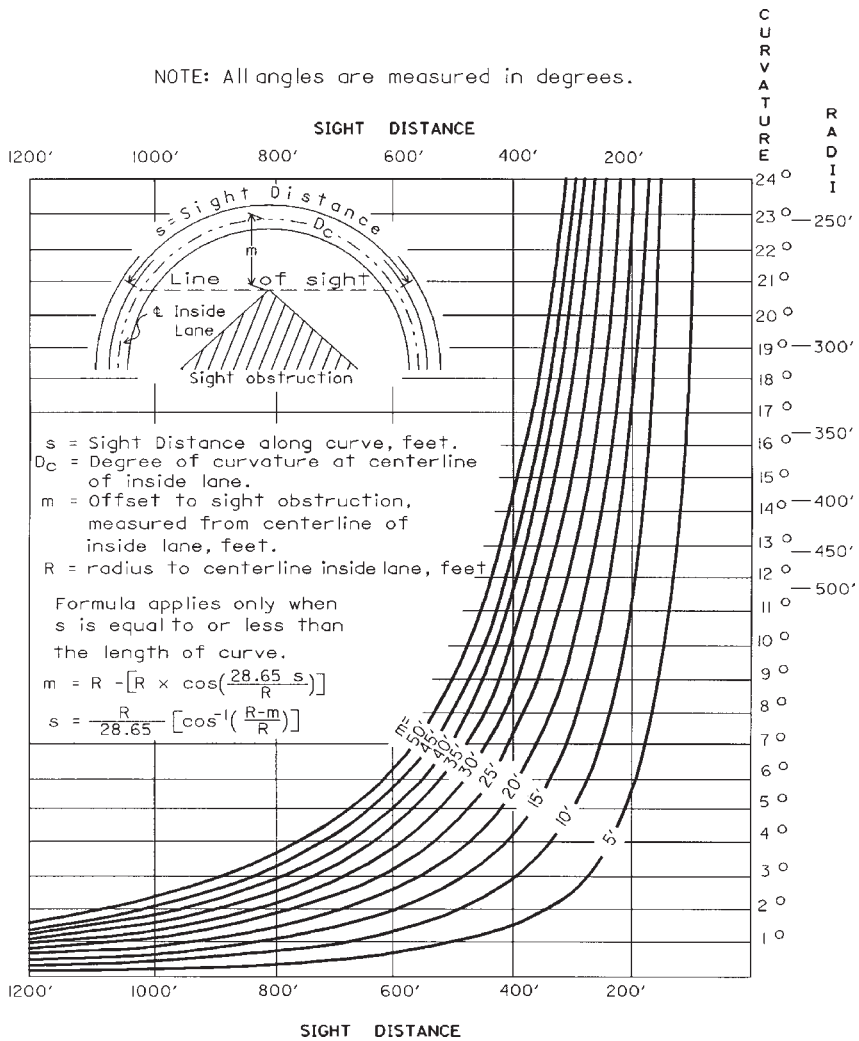

FIGURE 2.6 Horizontal sight distance along curve. Conversion: 1 ft = 0.305 m. (*From* Location and Design Manual, *Vol. 1*, Roadway Design, *Ohio Department of Transportation*, *with permission*)

When a cut slope is the potential restriction, the offset should be measured to a point on the backslope having the same elevation as the average of the roadway where the driver is, and the location of the lane downstream where a potential hazardous object lies. In this way, an allowance of 2.75 ft (0.84 m) of vegetative growth on the backslope can be made, since the driver's eye is assumed to be 3.5 ft (1.07 m) above the pavement and the top of a 2.0-ft (0.61-m) hazardous object downstream may still be seen.

Vertical sight distance may be restricted by the presence of vertical curves in the roadway profile. The sight distance on a crest vertical curve is based on a driver's

www.EngineeringEBooksPdf.com

ability to see a 2.0-ft-high (0.61-m) object in the roadway without being blocked by the pavement surface. The height of eye for the driver used in the calculations is 3.5 ft (1.07 m).

The sight distance on a sag vertical curve is dependent on the driver's being able to see the pavement surface as illuminated by headlights at night. The height of the headlight is assumed to be 2.0 ft (0.61 m), and the height of the object is 0.0. The upward divergence angle of the headlight beam is assumed to be 1°.

Intersection Sight Distance. A motorist attempting to enter or cross a highway from a stopped condition should be able to observe traffic at a distance that will allow safe movement. In cases where traffic is intermittent or moderate in flow, the motorist will wait to find an acceptable "gap." The driver approaching the intersection on the through road should have a clear view of the intersection including any vehicles stopped, waiting to cross, or turning. The methods described in the following paragraphs produce distances that provide sufficient sight distance for the stopped driver to make a safe crossing or turning maneuver. If these distances cannot be obtained, the minimum sight distance provided should not be less than the stopping sight distance for the through roadway. This would allow a driver on the through roadway adequate time to bring the vehicle to a stop if the waiting vehicle started to cross the intersection and suddenly stopped or stalled. If this distance cannot be provided, additional safety measures must be provided. These could include, but are not limited to, advance warning signals and flashers and/or reduced speed limit zones in the vicinity of the intersection.

There are three possible maneuvers for a motorist stopped at an intersection to make. The motorist can (1) cross the intersection by clearing oncoming traffic on both the left and right of the crossing vehicle, (2) turn left into the crossing roadway after first clearing the traffic on the left and then making a safe entry into the traffic stream from the right, or (3) turn right into the crossing roadway by making a safe entry into the traffic stream from the left.

In order to evaluate the amount of sight distance available to a stopped vehicle waiting to make a crossing or turning maneuver, the American Association of State Highway and Transportation Officials (AASHTO) adopted the concept of using "sight triangles" (Ref. 1). The vertices of the triangles are (a) the waiting driver's position, (b) the approaching driver's position, and (c) the intersection of the paths of the two vehicles, assuming a straight-ahead path for the waiting vehicles. Figure 2.7 shows the concept of sight triangles, emphasizing both the horizontal and vertical elements to be considered. The shaded area in the triangles is to be free of objects that would obstruct the field of vision for either driver. The profile view shows the limiting effect of vertical curvature of the through roadway. Notice that the height of eye of the drivers (3.50 ft or 1.07 m) is used for both the waiting and approaching vehicles. This stresses the importance of both drivers being able to see each other.

Table 2.3A provides intersection sight distance values for through vehicle speeds from 15 to 70 mi/h (24 to 113 km/h). The distances are based on a time gap of 7.5 s for a passenger vehicle turning left and a gap of 6.5 s for a crossing or right-turning vehicle. The height of eye and object were taken as 3.50 ft (1.07 m). The table also provides K values for crest vertical curves that would provide the required sight distance. (See Art. 2.2.4 for a discussion of vertical curvature.) Formulas are provided so that distances can be calculated for trucks requiring a longer time gap and for time adjustments due to upgrades or multiple lane crossings. See the notes in Table 2.3A, which explain how to adjust the timings.

Passing Sight Distance. In Table 2.3B, the "PSD" column lists the distances required for passing an overtaken vehicle at various design speeds. These distances are applicable

www.EngineeringEBooksPdf.com

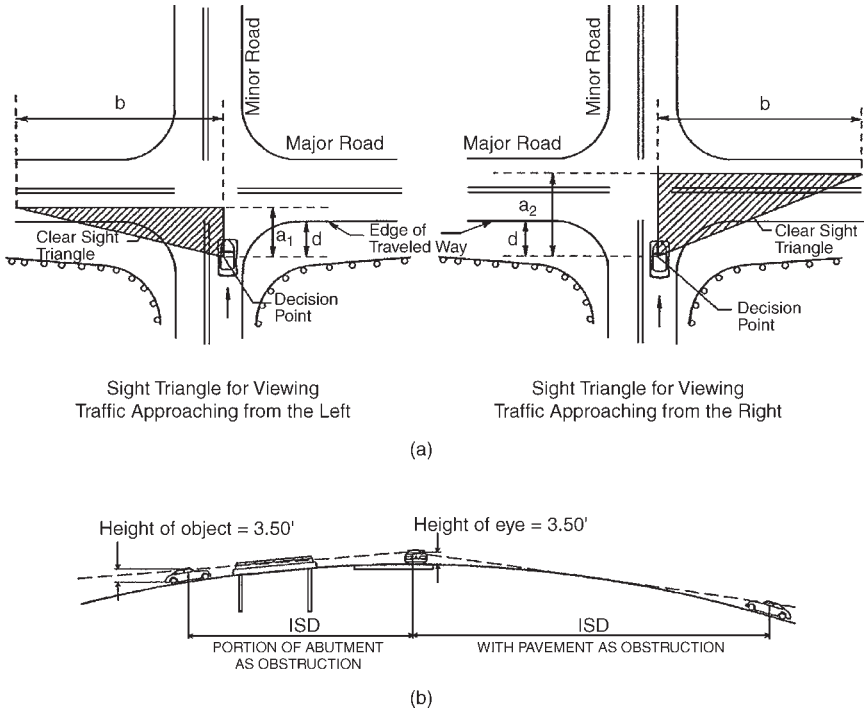

FIGURE 2.7 Intersection sight triangles. (*a*) Sight triangles. (*b*) Vertical components. a_1 = the distance, along the minor road, from the decision point to ½ the lane width of the approaching vehicle on the major road. a_2 = the distance, along the minor road, from the decision point to 1½ the lane width of the approaching vehicle on the major road. b = intersection sight distance (ISD). d = the distance from the edge of the traveled way of the major road to the decision point; the distance should be a minimum of 14.4 ft (4.39 m) and 17.8 ft (5.43 m) preferred. (*From* Location and Design Manual, *Vol. 1*, Roadway Design, *Ohio Department of Transportation*, *with permission*)

to two-lane roadways only. Among the assumptions that affect the required distance calculations are (1) the passing vehicle averages 10 mi/h (1.61 km/h) faster than the vehicle being passed, (2) the vehicle being passed travels at a constant speed and this speed is the average running speed (which is less than the design speed), and (3) the oncoming vehicle is traveling at the same speed as the passing vehicle. Table 2.3B contains K values for designing crest vertical curves to provide passing sight distance. These values assume that the height of the driver's eye is 3.5 ft (1.07 m) for both the passing and the oncoming vehicle. The equations at the bottom of the table provide mathematical solutions for sight distance on the crest curves.

On two-lane roadways, it is important to provide adequate passing sight distance for as much of the project length as possible to compensate for missed opportunities due to oncoming traffic in the passing zone. On roadways where the design hourly traffic volume exceeds 400, the designer should investigate the effect of available passing sight distance on highway capacity using procedures outlined in the latest Transportation Research Board "Highway Capacity Manual" (Ref. 10). If the available passing sight distance restricts the capacity from meeting the design level of service requirement, then adjustments should be made to the profile to increase the distance.

www.EngineeringEBooksPdf.com

TABLE 2.3A Intersection Sight Distance (ISD) for Design Speeds from 15 to 70 mi/h (24 to 113 km/h)

	Passenger cars completing a left turn from a stop (assuming a t_g of 7.5 s)		Passenger cars completing a right turn from a stop or crossing maneuver (assuming a t_g of 6.5 s)	
Design speed, mi/h	ISD, ft	*K*-crest vertical curve	ISD, ft	*K*-crest vertical curve
15	170	10	145	8
20	225	18	195	14
25	280	28	240	21
30	335	40	290	30
35	390	54	335	40
40	445	71	385	53
45	500	89	430	66
50	555	110	480	82
55	610	133	530	100
60	665	158	575	118
65	720	185	625	140
70	775	214	670	160

If ISD cannot be provided due to environmental or R/W constraints, then as a minimum, the SSD for vehicles on the major road should be provided.

$$\boxed{\text{ISD} = 1.47 \times V_{\text{major}} \times t_g}$$

ISD = intersection sight distance, ft

V_{major} = design speed of major road, mi/h

t_g = time gap for minor road vehicle to enter the major roads, s

Using S = intersection sight distance
L = length of crest vertical curve
A = algebraic difference in grades (%), absolute value
K = rate of vertical curvature

- For a given design speed and an A value, the calculated length $L = K \times A$.
- To determine S with a given L and A, use the following:
  For $S < L$: $S = 52.92\sqrt{K}$, where $K = L/A$
  For $S > L$: $S = 1400/A + L/2$

Note: For design criteria pertaining to collectors and local roads with ADT less than 400, please refer to Ref. 15, *Guidelines for Geometric Design of Very Low-Volume Local Roads (ADT ≤ 400).*

Time gaps

	Design vehicle	Time gap(s) at design speed of major road (t_g), s
A. Left turn from a stop	Passenger car	7.5
	Single-unit truck	9.5
	Combination truck	11.5
B. Right turn from a stop or crossing maneuver	Passenger car	6.5
	Single-unit truck	8.5
	Combination truck	10.5

(*Continued*)

www.EngineeringEBooksPdf.com

TABLE 2.3A Intersection Sight Distance (ISD) for Design Speeds from 15 to 70 mi/h (24 to 113 km/h) (*Continued*)

A. *Note:* The ISD and time gaps shown in the above tables are for a stopped vehicle to turn left onto a two-lane highway with no median and grades of 3 percent or less. For other conditions, the time gap must be adjusted as follows:

- For multilane highways: For left turns onto two-way highways with more than two lanes, add 0.5 s for passenger cars or 0.7 s for trucks for each additional lane, from the left, in excess of one, to be crossed by the turning vehicle.
- For minor road approach grades: If the approach grade is an upgrade that exceeds 3 percent, add 0.2 s for each percent grade for left turns.

B. *Note:* The ISD and time gaps shown in the above tables are for a stopped vehicle to turn right onto a two-lane highway with no median and grades of 3 percent or less. For other conditions, the time gap must be adjusted as follows:

- For multilane highways: For crossing a major road with more than two lanes, add 0.5 s for passenger cars or 0.7 s for trucks for each additional lane to be crossed and for narrow medians that cannot store the design vehicle.
- For minor road approach grades: If the approach grade is an upgrade that exceeds 3 percent, add 0.1 s for each percent grade.

Conversions: 1 mi/h = 1.609 km/h, 1 ft = 0.305 m.

Source: *Location and Design Manual*, Vol. 1, *Roadway Design*, Ohio Department of Transportation, with permission.

If the problem cannot be resolved in this manner, then consideration should be given to providing passing lane sections or constructing a multilane facility.

Decision Sight Distance. Stopping sight distances are usually sufficient to allow reasonably competent drivers to come to a hurried stop under ordinary circumstances. However, these distances may not be sufficient for drivers when information is difficult to perceive, or when unexpected maneuvers are required. In these circumstances, the decision sight distance provides a greater length for drivers to reduce the likelihood of error in receiving information, making decisions, or controlling the vehicle.

The following are examples of locations where it is desirable to provide decision sight distance: (1) exit ramps, (2) diverging roadway terminals, (3) intersection stop bars, (4) changes in cross section, such as toll plazas and lane drops, and (5) areas of concentrated demand where there is apt to be "visual noise" (i.e., where sources of information compete, such as roadway elements, traffic, traffic control devices, and advertising signs).

Table 2.4 shows decision sight distances based on design speed and avoidance maneuvers. The table lists values for five different avoidance maneuvers. Maneuvers A (rural stop) and B (urban stop) are calculated similar to the standard stopping sight distance values, except that perception times are increased to 3.0 s for rural environment and 9.1 s for urban. For maneuvers C (rural area), D (suburban area), and E (urban area), the braking component is replaced by an avoidance maneuver. This can be a change in speed, path, or direction. Values shown are calculated based on distance traveled during the perception-maneuver time. This time varies with speed and ranges from 10.2 to 10.7 s for rural areas, 12.1 to 12.4 s for suburban areas, and 14.0 to 14.1 s for

www.EngineeringEBooksPdf.com

TABLE 2.3B Minimum Passing Sight Distance (PSD) for Design Speeds from 20 to 70 mi/h (32 to 113 km/h)

Design speed, mi/h	PSD: Minimum PSD, ft	PSD: *K*-crest vertical curve
20	710	180
25	900	289
30	1090	424
35	1280	585
40	1470	772
45	1625	943
50	1835	1203
55	1985	1407
60	2135	1628
65	2285	1865
70	2480	2197

Using S = minimum passing sight distance
L = length of crest vertical curve
A = algebraic difference in grades (%), absolute value
K = rate of vertical curvature

- For a given design speed and an A value, the calculated length $L = K \times A$.
- To determine S with a given L and A, use the following:
  For $S < L$: $S = 52.92\sqrt{K}$, where $K = L/A$.
  For $S > L$: $S = 1400/A + L/2$.

Conversions: 1 mi/h = 1.609 km/h, 1 ft = 0.305 m.

Source: *Location and Design Manual*, Vol. 1, *Roadway Design*, Ohio Department of Transportation, with permission.

urban areas. To calculate available distance on a crest vertical curve, the driver's eye height is 3.5 ft (1.07 m) and the height of the object to be avoided is 2.0 ft (0.61 m).

Where conditions call for the use of a decision sight distance in design that cannot be achieved, every effort should be made to provide the stopping sight distance values from Table 2.2. Consideration should also be given to using suitable traffic control devices to provide advance warning of the unexpected conditions that may be encountered.

2.2.3 Horizontal Alignment and Superelevation

The horizontal alignment of a roadway should be designed to provide motorists with a facility for driving in a safe and comfortable manner. Adequate stopping sight distance should be furnished. Also, changes in direction should be accompanied by the use of curves and superelevation when appropriate in accordance with established guidelines. Some changes in alignment are slight and may not require curvature. Table 2.5 lists the maximum deflection angle which may be permitted without the use of a horizontal curve for each design speed shown. It is assumed that a motorist can easily negotiate the change in direction and maintain control over the vehicle without leaving the lane.

www.EngineeringEBooksPdf.com

TABLE 2.4 Decision Sight Distance (DSD) for Design Speeds from 30 to 70 mi/h (48 to 113 km/h)

	Decision sight distance, ft				
	Avoidance maneuver				
Design speed, mi/h	A	B	C	D	E
30	220	490	450	535	620
35	275	590	525	625	720
40	330	690	600	715	825
45	395	800	675	800	930
50	465	910	750	890	1030
55	535	1030	865	980	1135
60	610	1150	990	1125	1280
65	695	1275	1050	1220	1365
70	780	1410	1105	1275	1445

- The avoidance maneuvers are as follows: A—rural stop; B—urban stop; C—rural speed/path/direction change; D—suburban speed/path/direction change; E—urban speed/path/direction change
- Decision sight distance (DSD) is calculated or measured using the same criteria as stopping sight distance: 3.50 ft (1.07 m) eye height and 2.00 ft (0.61 m) object height.

Conversions: 1 mi/h = 1.609 km/h, 1 ft = 0.305 m.

Source: *Location and Design Manual*, Vol. 1, *Roadway Design*, Ohio Department of Transportation, with permission.

TABLE 2.5 Maximum Centerline Deflection Not Requiring a Horizontal Curve

Design speed, mi/h	Maximum deflection*
25	5°30′
30	3°45′
35	2°45′
40	2°15′
45	1°45′
50	1°15′
55	1°00′
60	1°00′
65	0°45′
70	0°45′

Based on the following formulas:

Design speed 50 mi/h or over: $\tan \Delta = 1.0/V$

Design speed under 50 mi/h: $\tan \Delta = 60/V^2$

where V = design speed, mi/h

Δ = deflection angle

Conversions: 1 mi/h = 1.609 km/h, 1 ft = 0.305 m.

Note: The recommended *minimum* distance between consecutive horizontal deflections is:

200 ft where design speed > 45 mi/h

100 ft where design speed ≤ 45 mi/h

*Rounded to nearest 15 min.

Source: *Location and Design Manual*, Vol. 1, *Roadway Design*, Ohio Department of Transportation, with permission.

www.EngineeringEBooksPdf.com

When centerline deflections exceed the values in Table 2.5, it is necessary to introduce a horizontal curve to assist the driver. Curves are usually accompanied by superelevation, which is a banking of the roadway to help counteract the effect of centrifugal force on the vehicle as it moves through the curve. In addition to superelevation, centrifugal force is also offset by the side friction developed between the tires of the vehicle and the pavement surface. The relationship of the two factors when considering curvature for a particular design speed is expressed by the following equation:

$$\text{U.S. units: } e + f = \frac{V^2}{15R} \tag{2.1a}$$

$$\text{SI units: } e + f = \frac{V^2}{127R} \tag{2.1b}$$

where e = superelevation rate, ft per ft (m per m) of pavement width
f = side friction factor
V = design speed, mi/h (km/h)
R = radius of curve, ft (m)

In developing superelevation guidelines for use in designing roadways, it is necessary to establish practical limits for both superelevation and side friction factors. Several factors affect the selection of a maximum superelevation rate for a given highway. Climate must be considered. Regions subject to snow and ice should not be superelevated too sharply, because the presence of these adverse conditions causes motorists to drive slower, and side friction is greatly reduced. Consequently, vehicles tend to slide to the low side of the roadway. Terrain conditions are another factor. Flat areas tend to have relatively flat grades, and such conditions have little effect on superelevation and side friction factors. However, mountainous regions have steeper grades, which combine with superelevation rates to produce steeper cross slopes on the pavement than may be apparent to the designer. Rural and urban areas require different maximum superelevation rates, because urban areas are more frequently subjected to congestion and slower-moving traffic. Vehicles operating at significantly less than design speeds necessitate a flatter maximum rate. Given the above considerations, a range of maximum values has been adopted for use in design. A maximum rate of 0.12 or 0.10 may be used in flat areas not subject to ice or snow. Rural areas where these conditions exist usually have a maximum rate of 0.08. A maximum rate of 0.06 is recommended for urban high-speed roadways, 50 mi/h (80 km/h) or greater, while 0.04 is used on low-speed urban roadways and temporary roads.

Various factors affect the side friction factors used in design. Among these are pavement texture, weather conditions, and tire condition. The upper limit of the side friction factor is when the tires begin to skid. Highway curves must be designed to avoid skidding conditions with a margin of safety. Side friction factors also vary with design speed. Higher speeds tend to have lower side friction factors. The result of various studies leads to the values listed in Table 2.6, which shows the side friction factors by design speed generally used in developing superelevation tables (Ref. 1).

Taking into account the above limits on superelevation rates and side friction factors, and rewriting Eq. (2.1), it follows that for a given design speed and maximum superelevation rate, there exists a minimum radius of curvature that should be allowed for design purposes:

$$R_{\min} = \frac{V^2}{15(e + f)} \tag{2.2}$$

To allow a lesser radius for the design speed would require the superelevation rate or the friction factor to be increased beyond the recommended limit.

www.EngineeringEBooksPdf.com

TABLE 2.6 Friction Factors for Design Speeds from 20 to 70 mi/h (32 to 113 km/h); Used in Developing Superelevation Tables

Design speed, mi/h	Side friction factor f
20	0.27
30	0.20
40	0.16
50	0.14
55	0.13
60	0.12
65	0.11
70	0.10

Source: Adapted from Ref. 1.

Highway design using U.S. Customary units defines horizontal curvature in terms of *degree of curve* as well as radius. Under this definition, the degree of curve is defined as the central angle of a 100-ft (30-m) arc using a fixed radius. This results in the following equation relating R (radius, ft) to D (degree of curve, degrees):

$$D = \frac{5729.6}{R} \tag{2.3}$$

Substituting in Eq. (2.2) gives the maximum degree of curvature for a given design speed and maximum superelevation rate:

$$D_{max} = \frac{85{,}660(e + f)}{V^2} \tag{2.4}$$

Before presenting the superelevation tables, one final consideration must be addressed. Because for any curve, superelevation and side friction combine to offset the effects of centrifugal force, the question arises how much superelevation should be provided for curves flatter than the "maximum" allowed for a given design speed. The following five methods have been used over the years (Ref. 1):

Method 1. Superelevation and side friction are directly proportional to the degree of curve or the inverse of the radius.

Method 2. Side friction is used to offset centrifugal force in direct proportion to the degree of curve, for curves up to the point where f_{max} is required. For sharper curves, f_{max} remains constant and e is increased in direct proportion to the increasing degree of curvature until e_{max} is reached.

Method 3. Superelevation is used to offset centrifugal force in direct proportion to the degree of curve for curves up to the point where e_{max} is required. For sharper curves, e_{max} remains constant and f is increased in direct proportion to the increasing degree of curvature until f_{max} is reached.

Method 4. Method 4 is similar to method 3, except that it is based on average running speed instead of design speed.

Method 5. Superelevation and side friction are in a curvilinear relationship with the degree of curve (inverse of radius), with resulting values between those of method 1 and method 3.

www.EngineeringEBooksPdf.com

Figure 2.8 shows a graphic comparison of the various methods. Method 5 is most commonly used on rural and high-speed [50 mi/h (80 km/h) or higher] urban highways. Method 2 is used on low-speed urban streets and temporary roadways.

Recommended minimum radii for a given range of design speeds and incremental superelevation rates are given in Tables 2.7 through 2.11, where each table represents

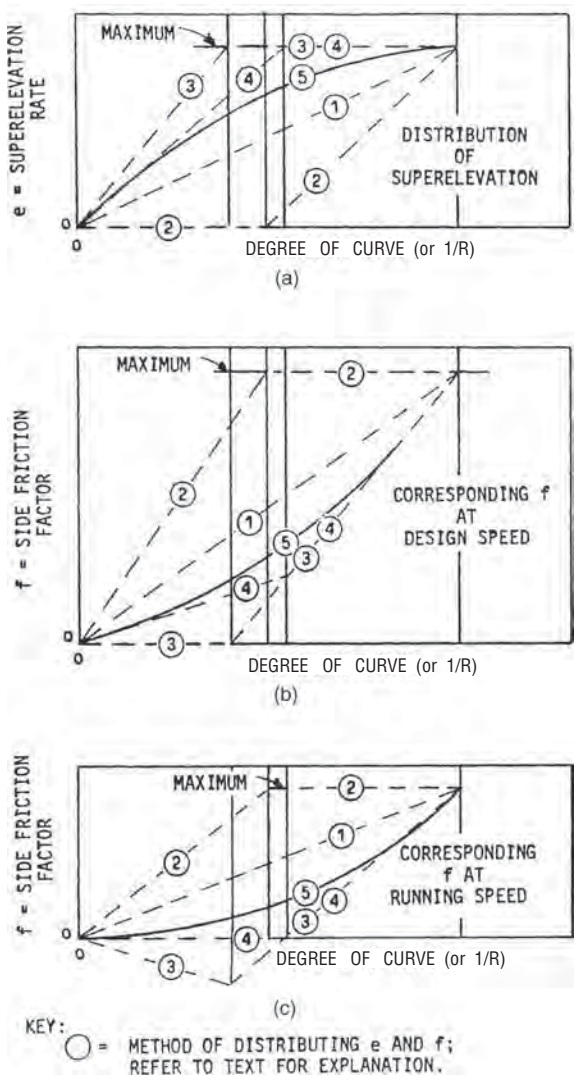

FIGURE 2.8 Methods of distributing superelevation and side friction. (*a*) Superelevation. (*b*) Corresponding friction factor at design speed. (*c*) Corresponding friction factor at running speed. (*From* A Policy on Geometric Design of Highways and Streets, *American Association of State Highway and Transportation Officials*, *Washington, D.C., 2004, with permission*)

www.EngineeringEBooksPdf.com

TABLE 2.7 Minimum Radii for Design Speeds from 15 to 60 mi/h (24 to 97 km/h) and Superelevation Rates to 4 Percent

e (%)	V_d = 15 mi/h R (ft)	V_d = 20 mi/h R (ft)	V_d = 25 mi/h R (ft)	V_d = 30 mi/h R (ft)	V_d = 35 mi/h R (ft)	V_d = 40 mi/h R (ft)	V_d = 45 mi/h R (ft)	V_d = 50 mi/h R (ft)	V_d = 55 mi/h R (ft)	V_d = 60 mi/h R (ft)
1.5	796	1410	2050	2830	3730	4770	5930	7220	8650	10300
2.0	506	902	1340	1880	2490	3220	4040	4940	5950	7080
2.2	399	723	1110	1580	2120	2760	3480	4280	5180	6190
2.4	271	513	838	1270	1760	2340	2980	3690	4500	5410
2.6	201	388	650	1000	1420	1930	2490	3130	3870	4700
2.8	157	308	524	817	1170	1620	2100	2660	3310	4060
3.0	127	251	433	681	982	1370	1800	2290	2860	3530
3.2	105	209	363	576	835	1180	1550	1980	2490	3090
3.4	88	175	307	490	714	1010	1340	1720	2170	2700
3.6	73	147	259	416	610	865	1150	1480	1880	2350
3.8	61	122	215	348	512	730	970	1260	1600	2010
4.0	42	86	154	250	371	533	711	926	1190	1500

Conversions: 1 mi/h = 1.609 km/h, 1 ft = 0.305 m.

R = radius of curve
V_d = design speed
e = rate of superelevation

Note: Use of e_{max} = 4 percent should be limited to urban conditions.

Source: *A Policy on Geometric Design of Highways and Streets*, American Association of State Highway and Transportation Officials, Washington, D.C., 2004, with permission.

www.EngineeringEBooksPdf.com

TABLE 2.8 Minimum Radii for Design Speeds from 15 to 80 mi/h (24 to 129 km/h) and Superelevation Rates to 6 Percent

e (%)	V_d = 15 mi/h R (ft)	V_d = 20 mi/h R (ft)	V_d = 25 mi/h R (ft)	V_d = 30 mi/h R (ft)	V_d = 35 mi/h R (ft)	V_d = 40 mi/h R (ft)	V_d = 45 mi/h R (ft)
1.5	868	1580	2290	3130	4100	5230	6480
2.0	614	1120	1630	2240	2950	3770	4680
2.2	543	991	1450	2000	2630	3370	4190
2.4	482	884	1300	1790	2360	3030	3770
2.6	430	791	1170	1610	2130	2740	3420
2.8	384	709	1050	1460	1930	2490	3110
3.0	341	635	944	1320	1760	2270	2840
3.2	300	566	850	1200	1600	2080	2600
3.4	256	498	761	1080	1460	1900	2390
3.6	209	422	673	972	1320	1740	2190
3.8	176	358	583	864	1190	1590	2010
4.0	151	309	511	766	1070	1440	1840
4.2	131	270	452	684	960	1310	1680
4.4	116	238	402	615	868	1190	1540
4.6	102	212	360	555	788	1090	1410
4.8	91	189	324	502	718	995	1300
5.0	82	169	292	456	654	911	1190
5.2	73	152	264	413	595	833	1090
5.4	65	136	237	373	540	759	995
5.6	58	121	212	335	487	687	903
5.8	51	106	186	296	431	611	806
6.0	39	81	144	231	340	485	643

(*Continued*)

www.EngineeringEBooksPdf.com

TABLE 2.8 Minimum Radii for Design Speeds from 15 to 80 mi/h (24 to 129 km/h) and Superelevation Rates to 6 Percent (*Continued*)

e (%)	V_d = 50 mi/h R (ft)	V_d = 55 mi/h R (ft)	V_d = 60 mi/h R (ft)	V_d = 65 mi/h R (ft)	V_d = 70 mi/h R (ft)	V_d = 75 mi/h R (ft)	V_d = 80 mi/h R (ft)
1.5	7870	9410	11100	12600	14100	15700	17400
2.0	5700	6820	8060	9130	10300	11500	12900
2.2	5100	6110	7230	8200	9240	10400	11600
2.4	4600	5520	6540	7430	8380	9420	10600
2.6	4170	5020	5950	6770	7660	8620	9670
2.8	3800	4580	5440	6200	7030	7930	8910
3.0	3480	4200	4990	5710	6490	7330	8260
3.2	3200	3860	4600	5280	6010	6810	7680
3.4	2940	3560	4250	4890	5580	6340	7180
3.6	2710	3290	3940	4540	5210	5930	6720
3.8	2490	3040	3650	4230	4860	5560	6320
4.0	2300	2810	3390	3950	4550	5220	5950
4.2	2110	2590	3140	3680	4270	4910	5620
4.4	1940	2400	2920	3440	4010	4630	5320
4.6	1780	2210	2710	3220	3770	4380	5040
4.8	1640	2050	2510	3000	3550	4140	4790
5.0	1510	1890	2330	2800	3330	3910	4550
5.2	1390	1750	2160	2610	3120	3690	4320
5.4	1280	1610	1990	2420	2910	3460	4090
5.6	1160	1470	1830	2230	2700	3230	3840
5.8	1040	1320	1650	2020	2460	2970	3560
6.0	833	1060	1330	1660	2040	2500	3050

Conversions: 1 mi/h = 1.609 km/h, 1 ft = 0.305 m.

R = radius of curve
V_d = design speed
e = rate of superelevation

Source: *A Policy on Geometric Design of Highways and Streets*, American Association of State Highway and Transportation Officials, Washington, D.C., 2004, with permission.

www.EngineeringEBooksPdf.com

TABLE 2.9 Minimum Radii for Design Speeds from 15 to 80 mi/h (24 to 129 km/h) and Superelevation Rates to 8 Percent

e (%)	V_d = 15 mi/h R (ft)	V_d = 20 mi/h R (ft)	V_d = 25 mi/h R (ft)	V_d = 30 mi/h R (ft)	V_d = 35 mi/h R (ft)	V_d = 40 mi/h R (ft)	V_d = 45 mi/h R (ft)
1.5	932	1640	2370	3240	4260	5410	6710
2.0	676	1190	1720	2370	3120	3970	4930
2.2	605	1070	1550	2130	2800	3570	4440
2.4	546	959	1400	1930	2540	3240	4030
2.6	496	872	1280	1760	2320	2960	3690
2.8	453	796	1170	1610	2130	2720	3390
3.0	415	730	1070	1480	1960	2510	3130
3.2	382	672	985	1370	1820	2330	2900
3.4	352	620	911	1270	1690	2170	2700
3.6	324	572	845	1180	1570	2020	2520
3.8	300	530	784	1100	1470	1890	2360
4.0	277	490	729	1030	1370	1770	2220
4.2	255	453	678	955	1280	1660	2080
4.4	235	418	630	893	1200	1560	1960
4.6	215	384	585	834	1130	1470	1850
4.8	193	349	542	779	1060	1390	1750
5.0	172	314	499	727	991	1310	1650
5.2	154	284	457	676	929	1230	1560
5.4	139	258	420	627	870	1160	1480
5.6	126	236	387	582	813	1090	1390
5.8	115	216	358	542	761	1030	1320
6.0	105	199	332	506	713	965	1250
6.2	97	184	308	472	669	909	1180
6.4	89	170	287	442	628	857	1110
6.6	82	157	267	413	590	808	1050
6.8	76	146	248	386	553	761	990
7.0	70	135	231	360	518	716	933
7.2	64	125	214	336	485	672	878
7.4	59	115	198	312	451	628	822
7.6	54	105	182	287	417	583	765
7.8	48	94	164	261	380	533	701
8.0	38	76	134	214	314	444	587

(*Continued*)

www.EngineeringEBooksPdf.com

TABLE 2.9 Minimum Radii for Design Speeds from 15 to 80 mi/h (24 to 129 km/h) and Superelevation Rates to 8 Percent (*Continued*)

e (%)	V_d = 50 mi/h R (ft)	V_d = 55 mi/h R (ft)	V_d = 60 mi/h R (ft)	V_d = 65 mi/h R (ft)	V_d = 70 mi/h R (ft)	V_d = 75 mi/h R (ft)	V_d = 80 mi/h R (ft)
1.5	8150	9720	11500	12900	14500	16100	17800
2.0	5990	7150	8440	9510	10700	12000	13300
2.2	5400	6450	7620	8600	9660	10800	12000
2.4	4910	5870	6930	7830	8810	9850	11000
2.6	4490	5370	6350	7180	8090	9050	10100
2.8	4130	4950	5850	6630	7470	8370	9340
3.0	3820	4580	5420	6140	6930	7780	8700
3.2	3550	4250	5040	5720	6460	7260	8130
3.4	3300	3970	4700	5350	6050	6800	7620
3.6	3090	3710	4400	5010	5680	6400	7180
3.8	2890	3480	4140	4710	5350	6030	6780
4.0	2720	3270	3890	4450	5050	5710	6420
4.2	2560	3080	3670	4200	4780	5410	6090
4.4	2410	2910	3470	3980	4540	5140	5800
4.6	2280	2750	3290	3770	4310	4890	5530
4.8	2160	2610	3120	3590	4100	4670	5280
5.0	2040	2470	2960	3410	3910	4460	5050
5.2	1930	2350	2820	3250	3740	4260	4840
5.4	1830	2230	2680	3110	3570	4090	4640
5.6	1740	2120	2550	2970	3420	3920	4460
5.8	1650	2010	2430	2840	3280	3760	4290
6.0	1560	1920	2320	2710	3150	3620	4140
6.2	1480	1820	2210	2600	3020	3480	3990
6.4	1400	1730	2110	2490	2910	3360	3850
6.6	1330	1650	2010	2380	2790	3240	3720
6.8	1260	1560	1910	2280	2690	3120	3600
7.0	1190	1480	1820	2180	2580	3010	3480
7.2	1120	1400	1720	2070	2470	2900	3370
7.4	1060	1320	1630	1970	2350	2780	3250
7.6	980	1230	1530	1850	2230	2650	3120
7.8	901	1140	1410	1720	2090	2500	2970
8.0	758	960	1200	1480	1810	2210	2670

Conversions: 1 mi/h = 1.609 km/h, 1 ft = 0.305 m.

R = radius of curve
V_d = design speed
e = rate of superelevation

Source: *A Policy on Geometric Design of Highways and Streets*, American Association of State Highway and Transportation Officials, Washington, D.C., 2004, with permission.

www.EngineeringEBooksPdf.com

TABLE 2.10 Minimum Radii for Design Speeds from 15 to 80 mi/h (24 to 129 km/h) and Superelevation Rates to 10 Percent

e (%)	V_d = 15 mi/h R (ft)	V_d = 20 mi/h R (ft)	V_d = 25 mi/h R (ft)	V_d = 30 mi/h R (ft)	V_d = 35 mi/h R (ft)	V_d = 40 mi/h R (ft)	V_d = 45 mi/h R (ft)
1.5	947	1680	2420	3320	4350	5520	6830
2.0	694	1230	1780	2440	3210	4080	5050
2.2	625	1110	1600	2200	2900	3680	4570
2.4	567	1010	1460	2000	2640	3350	4160
2.6	517	916	1330	1840	2420	3080	3820
2.8	475	841	1230	1690	2230	2840	3520
3.0	438	777	1140	1570	2060	2630	3270
3.2	406	720	1050	1450	1920	2450	3040
3.4	377	670	978	1360	1790	2290	2850
3.6	352	625	913	1270	1680	2150	2670
3.8	329	584	856	1190	1580	2020	2510
4.0	308	547	804	1120	1490	1900	2370
4.2	289	514	756	1060	1400	1800	2240
4.4	271	483	713	994	1330	1700	2120
4.6	255	455	673	940	1260	1610	2020
4.8	240	429	636	890	1190	1530	1920
5.0	226	404	601	844	1130	1460	1830
5.2	213	381	569	802	1080	1390	1740
5.4	200	359	539	762	1030	1330	1660
5.6	188	339	511	724	974	1270	1590
5.8	176	319	484	689	929	1210	1520
6.0	164	299	458	656	886	1160	1460
6.2	152	280	433	624	846	1110	1400
6.4	140	260	409	594	808	1060	1340
6.6	130	242	386	564	772	1020	1290
6.8	120	226	363	536	737	971	1230
7.0	112	212	343	509	704	931	1190
7.2	105	199	324	483	671	892	1140
7.4	98	187	306	460	641	855	1100
7.6	92	176	290	437	612	820	1050
7.8	86	165	274	416	585	786	1010
8.0	81	156	260	396	558	754	968
8.2	76	147	246	377	533	722	930
8.4	72	139	234	359	509	692	893
8.6	68	131	221	341	486	662	856
8.8	64	124	209	324	463	633	820
9.0	60	116	198	307	440	604	784
9.2	56	109	186	291	418	574	748
9.4	52	102	175	274	395	545	710
9.6	48	95	163	256	370	513	671
9.8	44	87	150	236	343	477	625
10.0	36	72	126	200	292	410	540

(*Continued*)

www.EngineeringEBooksPdf.com

TABLE 2.10 Minimum Radii for Design Speeds from 15 to 80 mi/h (24 to 129 km/h) and Superelevation Rates to 10 Percent (*Continued*)

e (%)	V_d = 50 mi/h R (ft)	V_d = 55 mi/h R (ft)	V_d = 60 mi/h R (ft)	V_d = 65 mi/h R (ft)	V_d = 70 mi/h R (ft)	V_d = 75 mi/h R (ft)	V_d = 80 mi/h R (ft)
1.5	8280	9890	11700	13100	14700	16300	18000
2.0	6130	7330	8630	9720	10900	12200	13500
2.2	5540	6630	7810	8800	9860	11000	12200
2.4	5050	6050	7130	8040	9010	10100	11200
2.6	4640	5550	6550	7390	8290	9260	10300
2.8	4280	5130	6050	6840	7680	8580	9550
3.0	3970	4760	5620	6360	7140	7990	8900
3.2	3700	4440	5250	5930	6680	7480	8330
3.4	3470	4160	4910	5560	6260	7020	7830
3.6	3250	3900	4620	5230	5900	6620	7390
3.8	3060	3680	4350	4940	5570	6260	6990
4.0	2890	3470	4110	4670	5270	5930	6630
4.2	2740	3290	3900	4430	5010	5630	6300
4.4	2590	3120	3700	4210	4760	5370	6010
4.6	2460	2970	3520	4010	4540	5120	5740
4.8	2340	2830	3360	3830	4340	4900	5490
5.0	2240	2700	3200	3660	4150	4690	5270
5.2	2130	2580	3060	3500	3980	4500	5060
5.4	2040	2460	2930	3360	3820	4320	4860
5.6	1950	2360	2810	3220	3670	4160	4680
5.8	1870	2260	2700	3090	3530	4000	4510
6.0	1790	2170	2590	2980	3400	3860	4360
6.2	1720	2090	2490	2870	3280	3730	4210
6.4	1650	2010	2400	2760	3160	3600	4070
6.6	1590	1930	2310	2670	3060	3480	3940
6.8	1530	1860	2230	2570	2960	3370	3820
7.0	1470	1790	2150	2490	2860	3270	3710
7.2	1410	1730	2070	2410	2770	3170	3600
7.4	1360	1670	2000	2330	2680	3070	3500
7.6	1310	1610	1940	2250	2600	2990	3400
7.8	1260	1550	1870	2180	2530	2900	3310
8.0	1220	1500	1810	2120	2450	2820	3220
8.2	1170	1440	1750	2050	2380	2750	3140
8.4	1130	1390	1690	1990	2320	2670	3060
8.6	1080	1340	1630	1930	2250	2600	2980
8.8	1040	1290	1570	1870	2190	2540	2910
9.0	992	1240	1520	1810	2130	2470	2840
9.2	948	1190	1460	1740	2060	2410	2770
9.4	903	1130	1390	1670	1990	2340	2710
9.6	854	1080	1320	1600	1910	2260	2640
9.8	798	1010	1250	1510	1820	2160	2550
10.0	694	877	1090	1340	1630	1970	2370

Conversions: 1 mi/h = 1.609 km/h, 1 ft = 0.305 m.

R = radius of curve
V_d = design speed
e = rate of Superelevation

Source: *A Policy on Geometric Design of Highways and Streets*, American Association of State Highway and Transportation Officials, Washington, D.C., 2004, with permission.

www.EngineeringEBooksPdf.com

TABLE 2.11 Minimum Radii for Design Speeds from 15 to 80 mi/h (24 to 129 km/h) and Superelevation Rates to 12 Percent

e (%)	V_d = 15 mi/h R (ft)	V_d = 20 mi/h R (ft)	V_d = 25 mi/h R (ft)	V_d = 30 mi/h R (ft)	V_d = 35 mi/h R (ft)	V_d = 40 mi/h R (ft)	V_d = 45 mi/h R (ft)
1.5	950	1690	2460	3370	4390	5580	6910
2.0	700	1250	1820	2490	3260	4140	5130
2.2	631	1130	1640	2250	2950	3750	4640
2.4	574	1030	1500	2060	2690	3420	4240
2.6	526	936	1370	1890	2470	3140	3900
2.8	484	863	1270	1740	2280	2910	3600
3.0	448	799	1170	1620	2120	2700	3350
3.2	417	743	1090	1510	1970	2520	3130
3.4	389	693	1020	1410	1850	2360	2930
3.6	364	649	953	1320	1730	2220	2750
3.8	341	610	896	1250	1630	2090	2600
4.0	321	574	845	1180	1540	1980	2460
4.2	303	542	798	1110	1460	1870	2330
4.4	286	512	756	1050	1390	1780	2210
4.6	271	485	717	997	1320	1690	2110
4.8	257	460	681	948	1260	1610	2010
5.0	243	437	648	904	1200	1540	1920
5.2	231	415	618	862	1140	1470	1840
5.4	220	395	589	824	1090	1410	1760
5.6	209	377	563	788	1050	1350	1690
5.8	199	359	538	754	1000	1300	1620
6.0	190	343	514	723	960	1250	1560
6.2	181	327	492	694	922	1200	1500
6.4	172	312	471	666	886	1150	1440
6.6	164	298	452	639	852	1110	1390
6.8	156	284	433	615	820	1070	1340
7.0	148	271	415	591	790	1030	1300
7.2	140	258	398	568	762	994	1250
7.4	133	246	382	547	734	960	1210
7.6	125	234	366	527	708	928	1170
7.8	118	222	351	507	684	897	1130
8.0	111	210	336	488	660	868	1100

(*Continued*)

www.EngineeringEBooksPdf.com

TABLE 2.11 Minimum Radii for Design Speeds from 15 to 80 mi/h (24 to 129 km/h) and Superelevation Rates to 12 Percent (*Continued*)

e (%)	V_d = 15 mi/h R (ft)	V_d = 20 mi/h R (ft)	V_d = 25 mi/h R (ft)	V_d = 30 mi/h R (ft)	V_d = 35 mi/h R (ft)	V_d = 40 mi/h R (ft)	V_d = 45 mi/h R (ft)
8.2	105	199	321	470	637	840	1070
8.4	100	190	307	452	615	813	1030
8.6	95	180	294	435	594	787	997
8.8	90	172	281	418	574	762	967
9.0	85	164	270	403	554	738	938
9.2	81	156	259	388	535	715	910
9.4	77	149	248	373	516	693	883
9.6	74	142	238	359	499	671	857
9.8	70	136	228	346	481	650	832
10.0	67	130	219	333	465	629	806
10.2	64	124	210	320	448	608	781
10.4	61	118	201	308	432	588	757
10.6	58	113	192	296	416	568	732
10.8	55	108	184	284	400	548	707
11.0	52	102	175	272	384	527	682
11.2	49	97	167	259	368	506	656
11.4	47	92	158	247	351	485	629
11.6	44	86	149	233	333	461	600
11.8	40	80	139	218	312	434	566
12.0	34	68	119	188	272	381	500

(*Continued*)

www.EngineeringEBooksPdf.com

TABLE 2.11 Minimum Radii for Design Speeds from 15 to 80 mi/h (24 to 129 km/h) and Superelevation Rates to 12 Percent (*Continued*)

e (%)	V_d = 50 mi/h R (ft)	V_d = 55 mi/h R (ft)	V_d = 60 mi/h R (ft)	V_d = 65 mi/h R (ft)	V_d = 70 mi/h R (ft)	V_d = 75 mi/h R (ft)	V_d = 80 mi/h R (ft)
1.5	8370	9990	11800	13200	14800	16400	18100
2.0	6220	7430	8740	9840	11000	12300	13600
2.2	5640	6730	7930	8920	9980	11200	12400
2.4	5150	6150	7240	8160	9130	10200	11300
2.6	4730	5660	6670	7510	8420	9380	10500
2.8	4380	5240	6170	6960	7800	8700	9660
3.0	4070	4870	5740	6480	7270	8110	9010
3.2	3800	4550	5370	6060	6800	7600	8440
3.4	3560	4270	5030	5690	6390	7140	7940
3.6	3350	4020	4740	5360	6020	6740	7500
3.8	3160	3790	4470	5060	5700	6380	7100
4.0	2990	3590	4240	4800	5400	6050	6740
4.2	2840	3400	4020	4560	5130	5750	6420
4.4	2700	3240	3830	4340	4890	5490	6120
4.6	2570	3080	3650	4140	4670	5240	5850
4.8	2450	2940	3480	3960	4470	5020	5610
5.0	2340	2810	3330	3790	4280	4810	5380
5.2	2240	2700	3190	3630	4110	4620	5170
5.4	2150	2590	3060	3490	3950	4440	4980
5.6	2060	2480	2940	3360	3800	4280	4800
5.8	1980	2390	2830	3230	3660	4130	4630
6.0	1910	2300	2730	3110	3530	3990	4470
6.2	1840	2210	2630	3010	3410	3850	4330
6.4	1770	2140	2540	2900	3300	3730	4190
6.6	1710	2060	2450	2810	3190	3610	4060
6.8	1650	1990	2370	2720	3090	3500	3940
7.0	1590	1930	2290	2630	3000	3400	3820
7.2	1540	1860	2220	2550	2910	3300	3720
7.4	1490	1810	2150	2470	2820	3200	3610
7.6	1440	1750	2090	2400	2740	3120	3520
7.8	1400	1700	2020	2330	2670	3030	3430
8.0	1360	1650	1970	2270	2600	2950	3340

(*Continued*)

www.EngineeringEBooksPdf.com

TABLE 2.11 Minimum Radii for Design Speeds from 15 to 80 mi/h (24 to 129 km/h) and Superelevation Rates to 12 Percent (*Continued*)

e (%)	V_d = 50 mi/h R (ft)	V_d = 55 mi/h R (ft)	V_d = 60 mi/h R (ft)	V_d = 65 mi/h R (ft)	V_d = 70 mi/h R (ft)	V_d = 75 mi/h R (ft)	V_d = 80 mi/h R (ft)
8.2	1320	1600	1910	2210	2530	2880	3260
8.4	1280	1550	1860	2150	2460	2800	3180
8.6	1240	1510	1810	2090	2400	2740	3100
8.8	1200	1470	1760	2040	2340	2670	3030
9.0	1170	1430	1710	1980	2280	2610	2960
9.2	1140	1390	1660	1940	2230	2550	2890
9.4	1100	1350	1620	1890	2180	2490	2830
9.6	1070	1310	1580	1840	2130	2440	2770
9.8	1040	1280	1540	1800	2080	2380	2710
10.0	1010	1250	1500	1760	2030	2330	2660
10.2	980	1210	1460	1720	1990	2280	2600
10.4	951	1180	1430	1680	1940	2240	2550
10.6	922	1140	1390	1640	1900	2190	2500
10.8	892	1110	1350	1600	1860	2150	2460
11.0	862	1070	1310	1560	1820	2110	2410
11.2	831	1040	1270	1510	1780	2070	2370
11.4	799	995	1220	1470	1730	2020	2320
11.6	763	953	1170	1410	1680	1970	2280
11.8	722	904	1120	1350	1620	1910	2230
12.0	641	807	1000	1220	1480	1790	2130

Conversions: 1 mi/h = 1.609 km/h, 1 ft = 0.305 m.

R = radius of curve
V_d = design speed
e = rate of superelevation

Source: *A Policy on Geometric Design of Highways and Streets*, American Association of State Highway and Transportation Officials, Washington, D.C., 2004, with permission.

www.EngineeringEBooksPdf.com

a different maximum superelevation rate. Table 2.7 shows values for a maximum rate of 0.04; Table 2.8, for 0.06; Table 2.9, for 0.08; Table 2.10, for 0.10; and Table 2.11, for 0.12. Method 5 was used to calculate the minimum radius for each superelevation rate less than the maximum rate in each design speed column in the tables.

The superelevation rates on low-speed urban streets are set using method 2 described above, in which side friction is used to offset the effect of centrifugal force up to the maximum friction value allowed for the design speed. Superelevation is then introduced for sharper curves. The design data in Table 2.12, based on method 2 and a maximum superelevation rate of 0.04, can be used for low-speed urban streets and temporary roads. The design data in Table 2.13 can be used for a wider range of design speeds and superelevation rates.

In attempting to apply the recommended superelevation rates for low-speed urban roadways, various factors may combine to make these rates impractical to obtain. These factors include wide pavements, adjacent development, drainage conditions, and frequent access points. In such cases, curves may be designed with reduced or no superelevation, although crown removal is the recommended minimum.

Effect of Grades on Superelevation. On long and fairly steep grades, drivers tend to travel somewhat slower in the upgrade direction and somewhat faster in the downgrade direction than on level roadways. In the case of divided highways, where each pavement can be superelevated independently, or on one-way roadways such as ramps, this tendency should be recognized to see whether some adjustment in the superelevation rate would be desirable and/or feasible. On grades of 4 percent or greater with a length of 1000 ft (305 m) or more and a superelevation rate of 0.06 or more, the designer may adjust the superelevation rate by assuming a design speed 5 mi/h (8 km/h) less in the upgrade direction and 5 mi/h (8 km/h) greater in the downgrade direction, provided that the assumed design speed is not less than the legal speed. On two-lane, two-way roadways and on other multilane undivided highways, such adjustments are less feasible, and should be disregarded.

Superelevation Methods. There are three basic methods for developing superelevation on a crowned pavement leading into and coming out of a horizontal curve. Figure 2.9 shows each method. In the most commonly used method, case I, the pavement edges are revolved about the centerline. Thus, the inner edge of the pavement is depressed by half of the superelevation and the outer edge raised by the same amount. Case II shows the pavement revolved about the inner or lower edge of pavement, and case III shows the pavement revolved about the outer or higher edge of pavement. Case II can be used where off-road drainage is a problem and lowering the inner pavement edge cannot be accommodated. The superelevation on divided roadways is achieved by revolving the pavements about the median pavement edge. In this way, the outside (high side) roadway uses case II, while the inside (low side) roadway uses case III. This helps control the amount of "distortion" in grading the median area.

Superelevation Transition. The length of highway needed to change from a normal crowned section to a fully superelevated section is referred to as the *superelevation transition.* This length is shown as X in Fig. 2.9, which also shows the various other elements described below. The superelevation transition is divided into two parts: the tangent runout, and the superelevation runoff.

The tangent runout (T in Fig. 2.9) is the length required to remove the adverse pavement cross slope. As is shown for case I of Fig. 2.9, this is the length required to raise the outside edge of pavement from a normal cross slope to a half-flat section. The superelevation runoff (L in Fig. 2.9) is the length required to raise the outside

www.EngineeringEBooksPdf.com

TABLE 2.12 Superelevation Rates and Runoff Lengths (ft) for Horizontal Curves on Low-Speed Urban Streets Based on a Maximum Superelevation Rate of 4 Percent

		Design speed, mi/h											
		20		25		30		35		40		45	
Dc	Radius, ft	e_d	L_r	e_d	L_r	e_d	L_r	e_d	L_r	e_d	L_r	e_d	L_r
5°00′	1146	NC	—	NC	—	NC	—	NC	—	NC	—	NC	—
5°30′	1042	NC	—	NC	—	NC	—	NC	—	NC	—	NC	—
6°00′	955	NC	—	NC	—	NC	—	NC	—	NC	—	RC	36
7°00′	819	NC	—	NC	—	NC	—	NC	—	NC	—	.016	36
7°30′	764	NC	—	NC	—	NC	—	NC	—	NC	—	.027	60
8°00′	716	NC	—	NC	—	NC	—	NC	—	RC	33	.039	87
9°00′	637	NC	—	NC	—	NC	—	NC	—	RC	33	△ = 8°00′	
9°30′	603	NC	—	NC	—	NC	—	NC	—	.017	35	▲ = 5°40′	
10°00′	573	NC	—	NC	—	NC	—	NC	—	.027	56		
10°30′	546	NC	—	NC	—	NC	—	NC	—	.036	75		
11°00′	521	NC	—	NC	—	NC	—	NC	—	△ = 10°45′			
11°30′	498	NC	—	NC	—	NC	—	RC	31	▲ = 7°42′			
12°00′	458	NC	—	NC	—	NC	—	RC	31				
13°00′	441	NC	—	NC	—	NC	—	RC	31				
14°00′	409	NC	—	NC	—	NC	—	.020	39				
15°00′	382	NC	—	NC	—	NC	—	.035	68				
15°30′	370	NC	—	NC	—	NC	—	.040	78				
17°00′	337	NC	—	NC	—	NC	—	△ = 15°30′					
17°30′	327	NC	—	NC	—	NC	—	▲ = 11°28′					
18°00′	318	NC	—	NC	—	RC	30						
20°00′	286	NC	—	NC	—	RC	30						
20°30′	279	NC	—	NC	—	.016	30						
21°00′	273	NC	—	NC	—	.021	39						
22°00′	260	NC	—	NC	—	.031	57						
22°45′	252	NC	—	NC	—	.039	72						
25°00′	229	NC	—	NC	—	△ = 22°45′							
29°00′	198	NC	—	NC	—	▲ = 17°30′							
29°30′	194	NC	—	RC	28								
30°00′	191	NC	—	RC	28								
33°00′	174	NC	—	RC	28								
33°45′	170	NC	—	.016	28								
35°00′	164	NC	—	.025	43								
36°00′	159	NC	—	.033	57								
37°00′	155	NC	—	.040	69								
40°00′	143	NC	—	△ = 37°00′									
50°00′	116	NC	—	▲ = 29°20′									
54°30′	105	RC	26										
56°00′	102	RC	26										
58°00′	99	RC	26										
61°00′	94	RC	26										
61°15′	93	.016	26										
62°00′	92	.020	32										
63°00′	91	.024	39										
64°00′	90	.029	47										
65°00′	88	.034	55										
66°00′	87	.038	62	△ = 66°30′									
66°30′	86	.040	65	▲ = 54°23′									

NC = Normal crown
RC = Remove crown
e_d = Design superelevation rate
L_r = minimum runoff length, 12-foot wide Lane rotated about the centerline
△ = Maximum degree of curve for the design speed
▲ = Maximum degree of curve for normal crown

Conversions: 1 mi/h = 1.609 km/h, 1 ft = 0.305 m.

Source: *Location and Design Manual*, Vol. 1, *Roadway Design*, Ohio Department of Transportation, with permission.

www.EngineeringEBooksPdf.com

TABLE 2.13 Runoff Lengths (ft) for Horizontal Curves with Design Speeds from 15 to 80 mi/h (24 to 129 km/h) and Superelevation Rates to 12 Percent Based on One Lane Rotated about the Centerline

e (%)	V_d = 15 mi/h L_r (ft)	V_d = 20 mi/h L_r (ft)	V_d = 25 mi/h L_r (ft)	V_d = 30 mi/h L_r (ft)	V_d = 35 mi/h L_r (ft)	V_d = 40 mi/h L_r (ft)	V_d = 45 mi/h L_r (ft)
1.5	0	0	0	0	0	0	0
2.0	31	32	34	36	39	41	44
2.2	34	36	38	40	43	46	49
2.4	37	39	41	44	46	50	53
2.6	40	42	45	47	50	54	58
2.8	43	45	48	51	54	58	62
3.0	46	49	51	55	58	62	67
3.2	49	52	55	58	62	66	71
3.4	52	55	58	62	66	70	76
3.6	55	58	62	65	70	74	80
3.8	58	62	65	69	74	79	84
4.0	62	65	69	73	77	83	89
4.2	65	68	72	76	81	87	93
4.4	68	71	75	80	85	91	98
4.6	71	75	79	84	89	95	102
4.8	74	78	82	87	93	99	107
5.0	77	81	86	91	97	103	111
5.2	80	84	89	95	101	108	116
5.4	83	88	93	98	105	112	120
5.6	86	91	96	102	108	116	124
5.8	89	94	99	105	112	120	129
6.0	92	97	103	109	116	124	133
6.2	95	101	106	113	120	128	138
6.4	98	104	110	116	124	132	142
6.6	102	107	113	120	128	137	147
6.8	105	110	117	124	132	141	151
7.0	108	114	120	127	135	145	156
7.2	111	117	123	131	139	149	160
7.4	114	120	127	135	143	153	164
7.6	117	123	130	138	147	157	169
7.8	120	126	134	142	151	161	173
8.0	123	130	137	145	155	166	178
8.2	126	133	141	149	159	170	182
8.4	129	136	144	153	163	174	187
8.6	132	139	147	156	166	178	191
8.8	135	143	151	160	170	182	196
9.0	138	146	154	164	174	186	200
9.2	142	149	158	167	178	190	204
9.4	145	152	161	171	182	194	209
9.6	148	156	165	175	186	199	213
9.8	151	159	168	178	190	203	218
10.0	154	162	171	182	194	207	222
10.2	157	165	175	185	197	211	227
10.4	160	169	178	189	201	215	231
10.6	163	172	182	193	205	219	236
10.8	166	175	185	196	209	223	240
11.0	169	178	189	200	213	228	244
11.2	172	182	192	204	217	232	249
11.4	175	185	195	207	221	236	253
11.6	178	188	199	211	225	240	258
11.8	182	191	202	215	228	244	262
12.0	185	195	206	218	232	248	267

(*Continued*)

www.EngineeringEBooksPdf.com

TABLE 2.13 Runoff Lengths (ft) for Horizontal Curves with Design Speeds from 15 to 80 mi/h (24 to 129 km/h) and Superelevation Rates to 12 Percent Based on One Lane Rotated about the Centerline (*Continued*)

e (%)	V_d = 50 mi/h L_r (ft)	V_d = 55 mi/h L_r (ft)	V_d = 60 mi/h L_r (ft)	V_d = 65 mi/h L_r (ft)	V_d = 70 mi/h L_r (ft)	V_d = 75 mi/h L_r (ft)	V_d = 80 mi/h L_r (ft)
1.5	0	0	0	0	0	0	0
2.0	48	51	53	56	60	63	69
2.2	53	56	59	61	66	69	75
2.4	58	61	64	67	72	76	82
2.6	62	66	69	73	78	82	89
2.8	67	71	75	78	84	88	96
3.0	72	77	80	84	90	95	103
3.2	77	82	85	89	96	101	110
3.4	82	87	91	95	102	107	117
3.6	86	92	96	100	108	114	123
3.8	91	97	101	106	114	120	130
4.0	96	102	107	112	120	126	137
4.2	101	107	112	117	126	133	144
4.4	106	112	117	123	132	139	151
4.6	110	117	123	128	138	145	158
4.8	115	123	128	134	144	152	165
5.0	120	128	133	140	150	158	171
5.2	125	133	139	145	156	164	178
5.4	130	138	144	151	162	171	185
5.6	134	143	149	156	168	177	192
5.8	139	148	155	162	174	183	199
6.0	144	153	160	167	180	189	206
6.2	149	158	165	173	186	196	213
6.4	154	163	171	179	192	202	219
6.6	158	169	176	184	198	208	226
6.8	163	174	181	190	204	215	233
7.0	168	179	187	195	210	221	240
7.2	173	184	192	201	216	227	247
7.4	178	189	197	207	222	234	254
7.6	182	194	203	212	228	240	261
7.8	187	199	208	218	234	246	267
8.0	192	204	213	223	240	253	274
8.2	197	209	219	229	246	259	281
8.4	202	214	224	234	252	265	288
8.6	206	220	229	240	258	272	295
8.8	211	225	235	246	264	278	302
9.0	216	230	240	251	270	284	309
9.2	221	235	245	257	276	291	315
9.4	226	240	251	262	282	297	322
9.6	230	245	256	268	288	303	329
9.8	235	250	261	273	294	309	336
10.0	240	255	267	279	300	316	343
10.2	245	260	272	285	306	322	350
10.4	250	266	277	290	312	328	357
10.6	254	271	283	296	318	335	363
10.8	259	276	288	301	324	341	370
11.0	264	281	293	307	330	347	377
11.2	269	286	299	313	336	354	384
11.4	274	291	304	318	342	360	391
11.6	278	296	309	324	348	366	398
11.8	283	301	315	329	354	373	405
12.07	288	306	320	335	360	379	411

Conversions: 1 mi/h = 1.609 km/h, 1 ft = 0.305 m.

Source: *A Policy on Geometric Design of Highways and Streets*, American Association of State Highway and Transportation Officials, Washington, D.C., 2004, with permission.

www.EngineeringEBooksPdf.com

NOTE: The diagrams below show positioning of the superelevation transition for both simple curves and spiral curves. Only one of these conditions would exist for a given transition.

LEGEND: X = Length of superelevation transition.
L = Length of superelevation runoff.
T = Tangent runout
R = Crown removal
G = Equivalent slope rate of Change of outside pavement edge compared to the control line in each case. (See Table 2.13 for values.)
N = Normal cross slope
S = Full superelevation rate

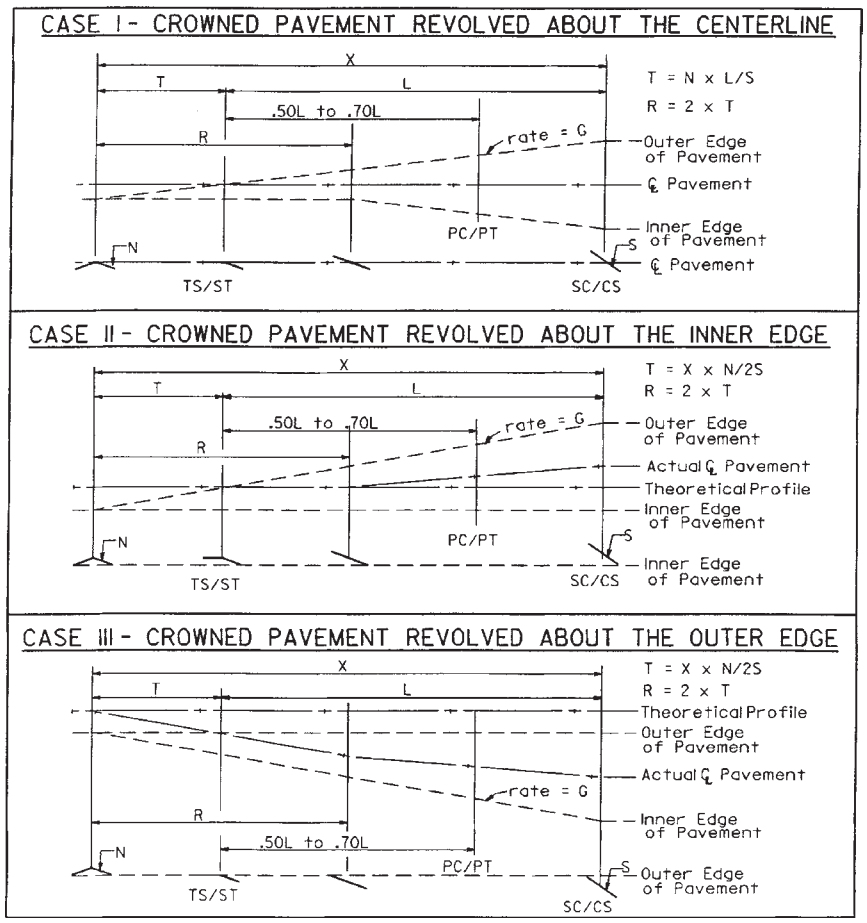

FIGURE 2.9 Superelevation transition between tangent and simple or spiral curves for three cases. (*From* Location and Design Manual, *Vol. 1*, Roadway Design, *Ohio Department of Transportation*, *with permission*)

edge of pavement from a half-flat section to a fully superelevated section. The length of transition required to remove the pavement crown (R in Fig. 2.9) is generally equal to twice the T distance.

The minimum superelevation transition length X should be equal in feet to 3 times the design speed in miles per hour. This includes the tangent runout (T) as previously described. The reason to specify this minimum is to avoid the appearance of a "kink" in

www.EngineeringEBooksPdf.com

the roadway that a shorter transition would provide. The distance is approximately equal to that traveled by a vehicle in 2 s at design speed. This requirement does not apply to low-speed roadways, temporary roads, superelevation transitions near intersections, or transitions between adjacent horizontal curves (reverse or same direction) where normal transitions would overlap each other. In these cases, the minimum transition length is determined by multiplying the edge of pavement correction by the equivalent slope rate (G) shown in Table 2.14. The rate of change of superelevation should be constant throughout the transition X. Some agencies use a flatter rate of transition through the T or R sections than that recommended in Table 2.14, an acceptable but unnecessary practice.

The values given for L_r in Tables 2.12 and 2.13 are based on one 12-ft (3.66-m) lane revolved about the centerline. Table 2.14 shows methods of calculating L when more lanes are revolved about the centerline. In the equations in Table 2.14, L is substituted for L_r. In addition to the terms described in Fig. 2.9, two additional ones are used. W is the width from the point of revolution to the outside edge of pavement. For example, if three 12-ft (3.66-m) lanes are revolved about the lane edge between lanes 2 and 3, then $W = 3 \times 12 = 36$ ft (11 m); the wider section of pavement is used for the width. B is an adjustment factor for multilane pavements to allow for some reduction in the superelevation transition for roads other than interstates, freeways, expressways, and ramps. Section (a) in Table 2.14 lists the equivalent slope rate values G for the various design speeds. Section (b) provides the multilane adjustments factors B for the speeds. Section (c) calculates the value of the overall transition length X based on the values given in (a) and (b) along with a given W and S for each case in Fig. 2.9. Finally, section (d) tests the values calculated to ensure that the minimum transition length discussed in this section is provided. Values for X, L, and T can be lengthened if necessary to achieve a 2-s transition time.

Superelevation Position. Figure 2.9 shows the recommended positioning of the proposed superelevation transition in relationship to the horizontal curve. For those curves with spirals, the transition from adverse crown removal to full superelevation should occur within the limits of the spiral. In other words, the spiral length should equal the L value, usually rounded to the nearest 25 ft (7.6 m).

For simple curves without spirals, the L transition should be placed so that 50 to 70 percent of the maximum superelevation rate is outside the curve limits (point of curvature PC to point of tangency PT). It is recommended that whenever possible, two-thirds of the full superelevation rate be present at the PC and PT. See the case diagrams in Fig. 2.9 for a graphic presentation of the recommended positioning.

Profiles and Elevations. Breakpoints at the beginning and end of the superelevation transition should be rounded to obtain a smooth profile. One suggestion is to use a "vertical curve" on the edge of the pavement profile with a length in feet equal to the design speed in mi/h (i.e., 45 ft for 45 mi/h). The final construction plans should have the superelevation tables or pavement details showing the proposed elevations at the centerline, pavement edges, and, if applicable, lane lines or other breaks in the cross slopes. Pavement or lane widths should be included where these widths are in transition. Pavement edge profiles should be plotted to an exaggerated vertical profile within the limits of the superelevation transitions to check calculations and to determine the location of drainage basins. Adjustments should be made to obtain smooth profiles. Special care should be taken in determining edge elevations in a transition area when the profile grade is on a vertical curve.

Superelevation between Reverse Horizontal Curves. When two horizontal curves are in close proximity to each other, the superelevation transitions calculated independently

www.EngineeringEBooksPdf.com

TABLE 2.14 Superelevation Notes for Adjusting Runoff Lengths in Tables 2.12 and 2.13

(a) Maximum relative gradients for profiles between the edge of pavement and the centerline or reference line

Design speed, mi/h	Relative gradient	Equivalent slope rate, G
20	0.74	135:1
25	0.70	143:1
30	0.66	152:1
35	0.62	161:1
40	0.58	172:1
45	0.54	185:1
50	0.50	200:1
55	0.47	213:1
60	0.45	222:1
65	0.43	233:1
70	0.40	250:1

(b) Transition length adjustment factors for wide pavements

Number of lanes from point of rotation	B for interstates, freeways, expressways, and ramps	B for other roadways
1.0	1.00	1.00
1.5	1.00	0.83
2.0	1.00	0.75
2.5	1.00	0.70
3.0	1.00	0.67
3.5	1.00	0.64

(c) Calculate X, L, T

Case I	Cases II and III
$X = BW(S + N)G$	$X = BWSG$
$L = BWSG$	$L = BW(S - N/2)G$
$T = BWNG$	$T = BW(N/2)G$

(d) Check for 2-second minimum transition

(*Note:* D is the linear ft equivalent of the design speed in mi/h. For example, D = 60 ft for 60 mi/h)
If $X > 3D$, then the values for X, L, and T from section (c) are valid.
If $X < 3D$, then recalculate X, L, and T as follows:

Case I	Cases II and III
$X = 3D$	$X = 3D$
$L = 3D[S/(N + S)]$	$L = 3D[(2S - N)/2S]$
$T = 3D[N/(N + S)]$	$T = 3D(N/2S)$

Conversion: 1 mi/h = 1.609 km/h.

General notes:

1. The L_r in Tables 2.12 and 2.13 is the same as L in Table 2.14 and is based on a two-lane 24-ft pavement revolved about the centerline.
2. Adjustments to L for varying two-lane pavement widths can be made by direct proportion. For a 20-ft pavement revolved about the centerline, $L' = L(20/24)$.
3. Determination of X, L, and T when more than one lane is revolved about the centerline (or other reference line, such as a baseline or edge of pavement) is shown in part (c). Values for G and B in the formulas are given in parts (a) and (b), respectively. The value for W is the pavement width from the point of rotation to the farthest edge.
4. The minimum length of superelevation transition (X) as discussed in the text is the distance traveled in 2 s. This number can be rounded off to a figure in feet equal to 3 times the design speed. In part (d) the calculated X value is compared to the value of $3D$, where D is the linear feet equivalent of the design speed in miles per hour. If the value of $3D$ is larger, X is set equal to this value and L and T are adjusted accordingly.
5. The L value is also the recommended spiral length where spirals are used.

Source: *Location and Design Manual*, Vol. 1, *Roadway Design*, Ohio Department of Transportation, with permission.

www.EngineeringEBooksPdf.com

may overlap each other. In these cases, the designer should coordinate the transitions to provide a smooth and uniform change from the full superelevation of the first curve to the full superelevation of the second curve. Figure 2.10 shows two diagrams suggesting ways in which this may be accomplished. In both diagrams each curve has its own L value (L_1, L_2) depending on the degree of curvature, and the superelevation is revolved about the centerline.

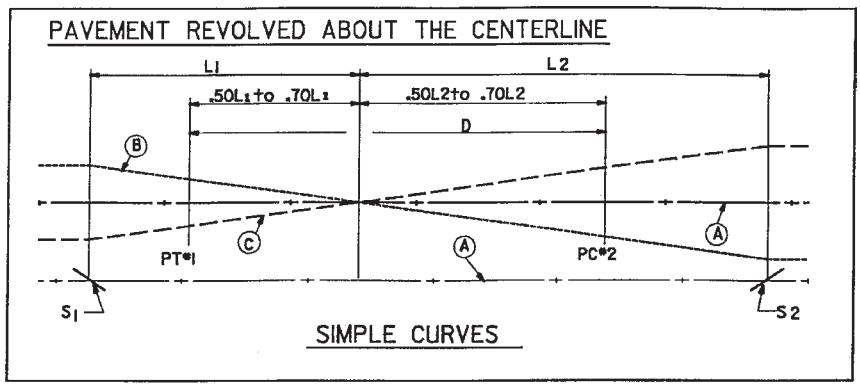

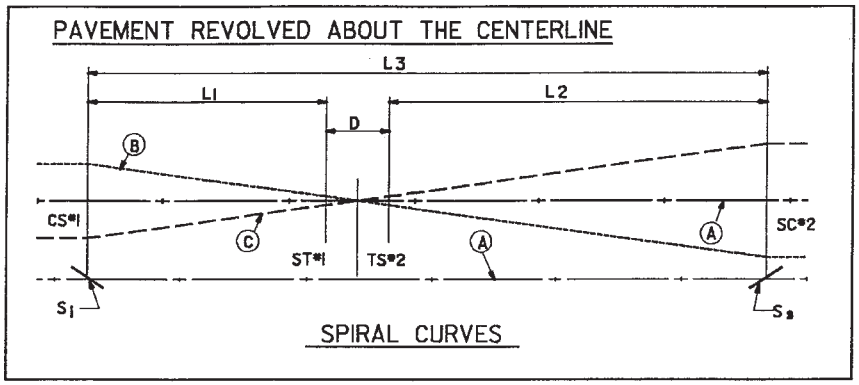

LEGEND:

- (A) - Centerline Pavement
- (B) - Outside E.P. Curve 1,
  Inside E.P. Curve 2 E.P.=Edge of Pavement
- (C) - Inside E.P. Curve 1, Outside E.P. Curve 2
- S_1, S_2 = Superelevation Rates: Curves 1 & 2
- L_1, L_2 = Superelevation Transition Lengths: Curves 1 & 2
- D = Distance between Curves
- L_3 = Total Superelevation Transition between Spiral Curves

FIGURE 2.10 Superelevation transition between reverse horizontal curves, simple or spiral. (*From* Location and Design Manual, *Vol. 1*, Roadway Design, *Ohio Department of Transportation, with permission*)

www.EngineeringEBooksPdf.com

The top diagram involves two simple curves. In the case of new or relocated alignment, the PT of the first curve and the PC of the second curve should be separated by enough distance to allow a smooth, continuous transition between the curves at a rate not exceeding the G value for the design speed (Table 2.14). This requires that the distance be not less than 50 percent nor greater than 70 percent of $L_1 + L_2$. Two-thirds is the recommended portion. When adapting this procedure to existing curves where no alignment revision is proposed, the transition should conform as closely as possible to the above criteria. When the available distance between the curves is less than 50 percent of $L_1 + L_2$, the transition rate may be increased and/or the superelevation rate at the PT or PC may be set to less than 50 percent of the full superelevation rate.

The lower diagram involves two spiral curves. Where spiral transitions are used, the spiral-to-tangent (ST) point of the first curve and the tangent-to-spiral (TS) transition of the second curve may be at, or nearly at, the same location, without causing superelevation problems. In these cases, the crown should not be reestablished as shown in Fig. 2.9, but instead, both pavement edges should be in continual transition between the curves, as shown in the lower diagram of Fig. 2.10. The total superelevation transition length is the distance between the curve-to-spiral (CS) point of the first curve and spiral-to-curve (SC) point of the second curve.

Spiral Transitions. When a motor vehicle enters or leaves a circular horizontal curve, it follows a transition path during which the driver makes adjustments in steering to account for the gain or loss in centrifugal force. For most curves, the average driver can negotiate this change in steering within the normal width of the travel lane. However, combinations of higher speeds and sharper curvature may cause the driver to move into an adjacent travel lane while accomplishing the change. To prevent this occurrence, the designer should use spirals to smooth out transitions.

There are several advantages to using spiral transitions for horizontal curves:

- They provide an easy-to-follow path for the driver to negotiate.
- They provide a convenient area in which to place the superelevation transition.
- They provide an area where the pavement width can be transitioned when required for curve widening.
- They provide a smoother appearance to the driver.

The Euler spiral is the one most commonly used in highway design. The degree of curve varies gradually from zero at the tangent end to the degree of the circular arc at the curve end. By definition, the degree of curve at any point along the spiral varies directly with the length measured along the spiral. In the case where a spiral transition connects two simple curves, the degree of curve varies directly from that of the first circular arc to that of the second circular arc. As a general guideline, spirals should be used on roadways where the design speed is 50 mi/h (80 km/h) or greater and the degree of curvature exceeds the values given in Table 2.15 for various design speeds listed.

Horizontal Alignment Considerations. The following items should be considered when establishing new horizontal alignment:

- The alignment should be as directional as possible while still consistent with topography and the preservation of developed properties and community values.
- Maximum allowable curvature should be avoided whenever possible.
- Consistent alignment should be sought.
- Curves should be long enough to avoid the appearance of a kink.

www.EngineeringEBooksPdf.com

TABLE 2.15 Maximum Curve without a Spiral

Design speed, mi/h	Design speed, km/h	Max. degree of curve	Min. radius, ft	Min. radius, m
50	80	4°30′	1273	388
55	88	3°45′	1528	466
60	96	3°00′	1910	582
65	105	2°30′	2292	699
70	113	2°15′	2546	776

Source: *Location and Design Manual*, Vol. 1, *Roadway Design*, Ohio Department of Transportation, with permission.

- Tangents and/or flat curves should be provided on high, long fills.
- Compound curves should be used only with caution.
- Abrupt alignment reversals should be avoided.
- Two curves in the same direction separated by a short tangent (broken-back or flat-back curves) should be avoided.

2.2.4 Vertical Alignment

The design of the vertical alignment of a roadway also has a direct effect on the safety and comfort of the driver. Steep grades can slow down large, heavy vehicles in the traffic stream in the uphill direction and can adversely affect stopping ability in the downhill direction. Grades that are flat or nearly flat over extended distances will slow down the rate at which the pavement surface drains. Vertical curves provide a smooth change between two tangent grades, but must be designed to provide adequate stopping sight distance.

Tangent Grades. The maximum percent grade for a given roadway is determined by its functional classification, surrounding terrain, and design speed. Table 2.16 shows how the maximum grade can vary under different circumstances. Note that relatively flat grade limits are recommended for higher functional class roadways and at higher design speeds, whereas steeper grade limits are permitted for local roads and at lower design speeds.

Concerning minimum grades, flat and level grades may be used on uncurbed roadways without objection, as long as the pavement is adequately crowned to drain the surface laterally. The preferred minimum grade for curbed pavements is 0.5 percent, but a grade of 0.3 percent may be used where there is a high-type pavement accurately crowned and supported on firm subgrade.

Critical Length of Grade. Freedom and safety of movement on two-lane highways are adversely affected by heavily loaded vehicles operating on upgrades of sufficient lengths to result in speeds that could impede following vehicles. The term *critical length of grade* is defined as the length of a particular upgrade which reduces the operating speed of a truck with a weight-to-horsepower ratio of 200 lb/hp (0.122 kg/W) to 10 mi/h (1.6 km/h) below the operating speed of the remaining traffic. Figure 2.11 provides the amount of speed reduction for these trucks given a range of percent upgrades and length of grades. The entering speed is assumed to be 70 mi/h (113 km/h). The curve representing a 10-mi/h (1.6-km/h) reduction is the design guideline to be used in determining the critical length of grade.

www.EngineeringEBooksPdf.com

TABLE 2.16 Maximum Grades as Determined by Function, Terrain, and Speed, %

Functional classification	Terrain	Design speed, mi/h										
		25	30	35	40	45	50	55	60	65	70	75–80
Urban:												
Interstate,* other freeways, and expressways	Level						4	4	3	3	3	3
	Rolling						5	5	4	4	4	4
	Hilly						6	6	6	5	5	
Arterial street†	Level		8	7	7	6	6	5	5			
	Rolling		9	8	8	7	7	6	6			
	Hilly		11	10	10	9	9	8	8			
Collector streets†	Level	9	9	9	9	8	7	7	6			
	Rolling	12	11	10	10	9	8	8	7			
	Hilly	13	12	12	12	11	10	10	9			
Local streets†	Level	7	7	7	7	7	6	6	5			
	Rolling	11	10	10	10	9	8	7	6			
	Hilly	15	14	13	13	12	10	10				
Rural:												
Interstate,* other freeways, and expressways	Level						4	4	3	3	3	3
	Rolling						5	5	4	4	4	4
	Hilly						6	6	6	5	5	
Arterials†	Level				5	5	4	4	3	3	3	3
	Rolling				6	6	5	5	4	4	4	4
	Hilly				8	7	7	6	6	5	5	5
Collectors†	Level	7	7	7	7	7	6	6	5			
	Rolling	10	9	9	8	8	7	7	6			
	Hilly	11	10	10	10	10	9	9	8			
Local roads†	Level	7	7	7	7	7	6	6	5			
	Rolling	11	10	10	10	9	8	7	6			
	Hilly	15	14	13	13	12	10	10				

Conversions: 1 mi/h = 1.609 km/h, 1 ft = 0.305 m.

*Grades 1% steeper may be used for extreme cases where development in urban areas precludes the use of flatter grades. Grades 1% steeper may also be used for one-way down-grades except in hilly terrain.

†Grades 1% steeper may be used for short lengths (less than 500 ft) and on one-way down-grades. For rural highways with current ADT less than 400, grades may be 2% steeper.

Source: *Location and Design Manual*, Vol. 1, *Roadway Design*. Ohio Department of Transportation, with permission.

If after an investigation of the project grade line, it is found that the critical length of grade must be exceeded, an analysis of the effect of the long grades on the level of service of the roadway should be made. Where speeds resulting from trucks climbing up long grades are calculated to fall within the range of service level *D* or lower, consideration should be given to constructing added uphill lanes on critical lengths of grade. Refer to the "Highway Capacity Manual" (Ref. 10) for methodology in determining level of service. Where the length of added lanes needed to preserve the recommended level of service on sections with long grades exceeds 10 percent of the total distance between major termini, consideration should be given to the ultimate construction of a divided multilane facility.

www.EngineeringEBooksPdf.com

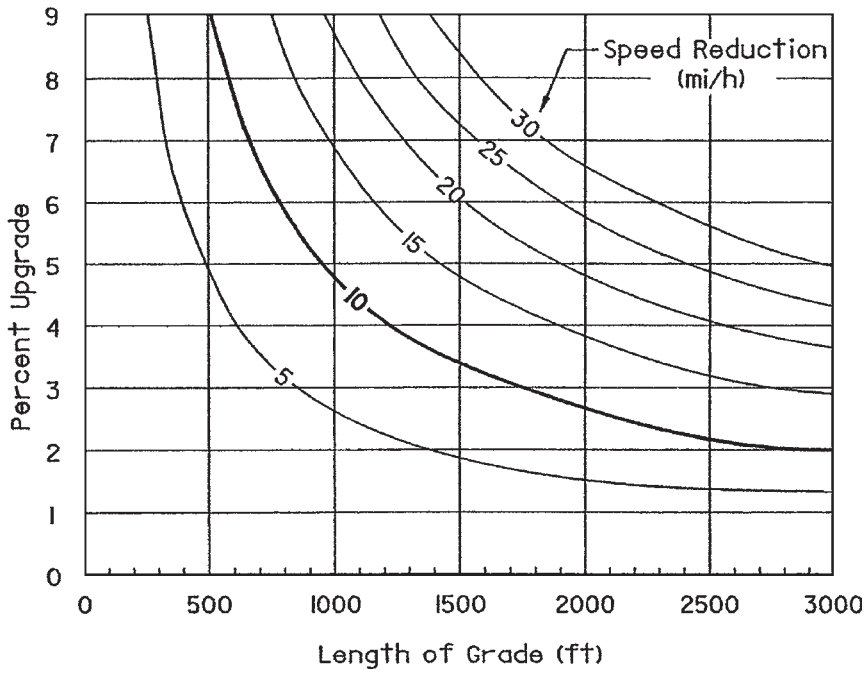

FIGURE 2.11 Critical lengths of grade based on typical heavy truck of 200 lb/hp (0.122 kg/W) at entering speed of 70 mi/h (113 km/h). *Notes:* (1) This graph can also be used to compute the critical length of grade for grade combinations. For example, find the critical length of grade for a 4 percent upgrade preceded by 2000 ft (610 m) of 2 percent upgrade and a tolerable speed reduction of 15 mi/h (24 km/h). From the graph, 2000 ft (610 m) of 2 percent upgrade results in a speed reduction of 7 mi/h (11 km/h). Subtracting 7 mi/h (11.2 km/h) from the tolerable speed reduction of 15 mi/h (24 km/h) gives the remaining tolerable speed reduction of 8 mi/h (12.8 km/h). The graph shows that the remaining tolerable speed reduction would occur on 1000 ft (305 m) of the 4 percent upgrade. (2) The critical length of grade is the length of tangent grade. When a vertical curve is part of the critical length of grade, an approximate equivalent tangent grade should be used. Where $A \leq 3$ percent, the vertical tangent lengths can be used (VPI to VPI). Where $A > 3$ percent, about $^1/_4$ of the vertical curve length should be used as part of the tangent grade. Conversions: 1 mi/h = 1.609 km/h, 1 ft = 0.305 m. (*From* Location and Design Manual, *Vol. 1*, Roadway Design, *Ohio Department of Transportation, with permission*)

Vertical Curves. A vertical curve is used to provide a smooth transition between vertical tangents of different grades. It is a parabolic curve and is usually centered on the intersection point of the vertical tangents. One of the principles of parabolic curves is that the rate of change of slope is a constant throughout the curve. For a vertical curve, this rate is equal to the length of the curve divided by the algebraic difference of the grades. This value is called the K value and represents the distance required for the vertical tangent to change by 1 percent. The K value is useful in design to determine the minimum length of vertical curve necessary to provide minimum stopping sight distance given two vertical grades.

Allowable Grade Breaks. There are situations where it is not necessary to provide a vertical curve at the intersection of two vertical grades because the difference in grades is not large enough to provide any discomfort to the driver. The difference

www.EngineeringEBooksPdf.com

TABLE 2.17 Maximum Change in Vertical Alignment Not Requiring a Vertical Curve

Design speed, mi/h	Design speed, km/h	Maximum grade change, %*
25	40	1.85
30	48	1.30
35	56	0.95
40	64	0.75
45	72	0.55
50	80	0.45
55	88	0.40
60	96	0.30
65	105	0.30
70	113	0.25

Based on the following equation:

$$A = \frac{46.5L}{V^2} = \frac{1162.5}{V^2}$$

where A = maximum grade change, %
L = length of vertical curve, ft; assume 25
V = design speed, mi/h

Note: The recommended *minimum* distance between consecutive deflections is 100 ft (30 m) where design speed > 40 mi/h (64 km/h) and 50 ft (15 m) where design speed ≤ 40 mi/h.

*Rounded to nearest 0.05%.

Source: *Location and Design Manual*, Vol. 1, *Roadway Design*, Ohio Department of Transportation, with permission.

varies with the design speed of the roadway. At 25 mi/h (40 km/h), a grade break of 1.85 percent without a curve may be permitted, while at 55 mi/h (88 km/h) the allowable difference is only 0.40 percent. Table 2.17 lists the maximum grade break permitted without using a vertical curve for various design speeds. The equation used to develop the distances is indicated as well as a recommended minimum distance between consecutive grade breaks. Where consecutive grade breaks occur within 100 ft (30 m) for design speeds over 40 mi/h (64 km/h), or within 50 ft (15 m) for design speeds at 40 mi/h (64 km/h) and under, this indicates that a vertical curve may be a better solution than not providing one.

Crest Vertical Curves. The major design consideration for crest vertical curves is the provision of ample stopping sight distance for the design speed. Calculations of available stopping sight distance are based on the driver's eye 3.5 ft (1.07 m) above the roadway surface with the ability to see an object 2 ft (0.61 m) high on the roadway ahead over the top of the pavement. Table 2.18 lists the calculated design stopping sight distance values and the corresponding K values for design speeds from 20 to 70 mi/h (32 to 113 km/h). The values shown are based on the assumption that the curve is longer than the sight distance. In those cases where the sight distance exceeds the vertical curve length, a different equation is used to calculate the stopping sight distance provided. The equations are shown in the table.

Another consideration in designing crest vertical curves is passing sight distance, especially when dealing with two-lane roadways. This has already been discussed

www.EngineeringEBooksPdf.com

TABLE 2.18 Stopping Sight Distance (SSD) for Crest Vertical Curves at Design Speeds from 20 to 70 mi/h (32 to 113 km/h)

Height of eye, 3.50 ft; height of object, 2.00 ft

Design speed, mi/h	Design SSD, ft	Design K, ft/%	Design speed, mi/h	Design SSD, ft	Design K, ft/%
20	115	7	46	375	66
21	120	7	47	385	69
22	130	8	48	400	75
23	140	10	49	415	80
24	145	10	50	425	84
25	155	12	51	440	90
26	165	13	52	455	96
27	170	14	53	465	101
28	180	15	54	480	107
29	190	17	55	495	114
30	200	19	56	510	121
31	210	21	57	525	128
32	220	23	58	540	136
33	230	25	59	555	143
34	240	27	60	570	151
35	250	29	61	585	159
36	260	32	62	600	167
37	270	34	63	615	176
38	280	37	64	630	184
39	290	39	65	645	193
40	305	44	66	665	205
41	315	46	67	680	215
42	325	49	68	695	224
43	340	54	69	715	237
44	350	57	70	730	247
45	360	61			

Using S = stopping sight distance, ft
L = length of crest vertical curve, ft
A = algebraic difference in grades, %, absolute value
K = rate of vertical curvature, ft per % change

- For a given design speed and A value, the calculated length $L = KA$.
- To determine S with a given L and A, use the following:
  For $S < L$: $S = 46.45\sqrt{K}$ where $K = L/A$
  For $S > L$: $S = 1079/A + L/2$

Conversions: 1 mi/h = 1.609 km/h, 1 ft = 0.305 m.

Note: For design criteria pertaining to collectors and local roads wih ADT less than 400, please refer to the AASHTO publication, *Guidelines for Geometric Design of Very Low-Volume Local Roads (ADT ≤ 400)*.

Source: *Location and Design Manual*, Vol. 1, *Roadway Design*, Ohio Department of Transportation, with permission.

under "Passing Sight Distance" earlier in this chapter. Also, in addition to being designed for safe stopping sight distance, crest vertical curves should be designed for comfortable operation and a pleasing appearance whenever possible. To accomplish this, the length of a crest curve in feet should be, as a minimum, 3 times the design speed in miles per hour.

www.EngineeringEBooksPdf.com

Sag Vertical Curves. The main factor affecting the design of a sag vertical curve is headlight sight distance. When a vehicle traverses an unlighted sag vertical curve at night, the portion of highway lighted ahead is dependent on the position of the headlights and the direction of the light beam. For design purposes, the length of roadway lighted ahead is assumed to be the available stopping sight distance for the curve. In calculating the distances for a given set of grades and a length of curve, the height of the headlight is assumed to be 2 ft (0.61 m) and the upward divergence of the light beam is considered to be 1°. Table 2.19 lists the calculated design stopping sight distance values and the corresponding *K* values for design speeds from 20 to 70 mi/h (32 to 113 km/h). As was the case with crest curves, the values shown are based on the assumption that the curve is longer than the sight distance. In those cases where the sight distance exceeds the vertical curve length, a different equation is used to calculate the actual stopping sight distance provided as indicated in the table.

Note for sag curves, when the algebraic difference of grades is 1.75 percent or less, stopping sight distance is not restricted by the curve. In these cases, the equations in Table 2.19 will not provide meaningful answers. Minimum lengths of sag vertical curves are necessary to provide a pleasing general appearance of the highway. To accomplish this, the minimum length of a sag curve in feet should be equal to 3 times the design speed in miles per hour.

Vertical Alignment Considerations. The following items should be considered when establishing new vertical alignment:

- The profile should be smooth with gradual changes consistent with the type of facility and the character of the surrounding terrain.
- A "roller-coaster" or "hidden dip" profile should be avoided.
- Undulating grade lines involving substantial lengths of steeper grades should be appraised for their effect on traffic operation, since they may encourage excessive truck speeds.
- Broken-back grade lines (two vertical curves—a pair of either crest curves or sag curves—separated by a short tangent grade) should generally be avoided.
- Special attention should be given to drainage on curbed roadways where vertical curves have a *K* value of 167 or greater, since these areas are very flat.
- It is preferable to avoid long, sustained grades by breaking them into shorter intervals with steeper grades at the bottom.

2.2.5 Coordination of Horizontal and Vertical Alignments

When designing new roadway projects, the following items should be considered to coordinate the horizontal and vertical alignments:

- Curvature and tangent sections should be properly balanced. Normally, horizontal curves will be longer than vertical curves.
- It is generally more pleasing to the driver when vertical curvature can be superimposed on horizontal curvature. In other words, the PIs (points of intersection) of both the vertical and horizontal curves should be near the same station or location.
- Sharp horizontal curves should not be introduced at or near the top of a pronounced crest vertical curve or at or near the low point of a pronounced sag vertical curve.

www.EngineeringEBooksPdf.com

TABLE 2.19 Stopping Sight Distance for Sag Vertical Curves at Design Speeds from 20 to 70 mi/h (32 to 113 km/h)

Height of headlight = 2.00 ft

Upward light beam divergence = 1°00′

Design speed, mi/h	Design SSD, ft	Design K, ft/%	Design speed, mi/h	Design SSD, ft	Design K, ft/%
20	115	17	46	375	83
21	120	18	47	385	85
22	130	20	48	400	89
23	140	22	49	415	93
24	145	24	50	425	96
25	155	26	51	440	100
26	165	28	52	455	104
27	170	29	53	465	107
28	180	32	54	480	111
29	190	34	55	495	115
30	200	37	56	510	119
31	210	39	57	525	123
32	220	42	58	540	128
33	230	44	59	555	132
34	240	47	60	570	136
35	250	49	61	585	140
36	260	52	62	600	144
37	270	55	63	615	148
38	280	57	64	630	153
39	290	60	65	645	157
40	305	64	66	665	162
41	315	66	67	680	167
42	325	69	68	695	171
43	340	73	69	715	176
44	350	76	70	730	181
45	360	79			

Using S = stopping sight distance, ft
L = length of sag vertical curve, ft
A = algebraic difference in grades, %, absolute value
K = rate of vertical curvature, ft per % change

- For a given design speed and A value, the calculated length $L = KA$
- To determine S with a given L and A, use the following:

For $S < L$: $$S = \frac{3.5L + \sqrt{12.25L^2 + 1600AL}}{2A}$$

For $S > L$: $$S = (AL + 400)/(2A - 3.5)$$

Conversions: 1 mi/h = 1.609 km/h, 1 ft = 0.305 m.

Note: When the algebraic difference A is 1.75 percent or less, SSD is not restricted by the vertical curve.

Source: *Location and Design Manual*, Vol. 1, *Roadway Design*, Ohio Department of Transportation, with permission.

www.EngineeringEBooksPdf.com

- On two-lane roadways, long tangent sections (horizontal and vertical) are desirable to provide adequate passing sections.
- Horizontal and vertical curves should be as flat as possible at intersections.
- On divided highways, the use of variable median widths and separate horizontal and vertical alignments should be considered.
- In urban areas, horizontal and vertical alignments should be designed to minimize nuisance factors. These might include directional adjustment to increase buffer zones and depressed roadways to decrease noise.
- Horizontal and vertical alignments may often be adjusted to enhance views of scenic areas.

2.3 CROSS-SECTION DESIGN

This article provides information to assist the designer in determining lane widths, pavement cross slopes, shoulder widths, interchange cross-section elements, medians, curbs, pedestrian facilities, and grading and side slopes. The number of lanes for a given roadway facility is best determined using principles and procedures contained in the "Highway Capacity Manual" (Ref. 10). This manual analyzes roadways to determine an appropriate "level of service," by which a letter value (A through F) is assigned depending on the volume of traffic and other geometric features. Table 2.20 provides a design guide for level of service for various facilities by functional classification and terrain or locale. The table includes a brief description of the characteristics of each level of service.

TABLE 2.20 Guide for Selecting Design Service Level As Determined by Function and Terrain or Locale

Functional classification	Minimum level of service for area and terrain or locale			
	Rural			Urban and suburban
	Level	Rolling	Hilly	
Interstate, other freeways, and expressways	B	B	C	C
Arterial	B	B	C	C
Collector	C	C	D	D
Local	D	D	D	D

A: Free flow, with low volumes and high speeds.

B: Stable flow, speeds beginning to be restricted by traffic conditions.

C: In stable flow zone, but most drivers are restricted in freedom to select own speed.

D: Approaching unstable flow; drivers have little freedom to maneuver.

E: Unstable flow; short stoppages may occur.

F: Forced or breakdown flow.

Source: *Location and Design Manual*, Vol. 1, *Roadway Design*, Ohio Department of Transportation, with permission.

www.EngineeringEBooksPdf.com

2.3.1 Roadway Criteria

Lane Widths and Transitions. When considering the physical characteristics of cross sections, the values selected will depend on location (rural or urban), speed, traffic volumes, functional classification, and, in urban areas, the type of adjacent development. Tables 2.21, 2.22, and 2.23 provide values currently used in Ohio. Lane width is dependent on design speed, especially in rural areas. Widths may be as narrow as 9 ft (2.74 m) for a local, low-volume road. In urban areas, lane widths can be as narrow as 10 ft (3.05 m), if the road is primarily a residential street. The maximum lane width is generally accepted to be 12 ft (3.66 m) in all locales.

In some cases it may be necessary to widen the pavement on sharp curves to accommodate off-tracking of larger vehicles. Table 2.24 provides a chart of recommended pavement widening based on degree of curvature and design speed. These values are based on a WB-50 design vehicle. The widened portion of the pavement is normally placed on the inside of the curve. Where curves are introduced with spiral transitions, the widening occurs over the length of the spiral. On alignments without spirals, the widening is developed over the same distance that the superelevation transition occurs. The centerline pavement marking and the center joint (if applicable) should be placed equidistant from the pavement edges. See Fig. 2.12 for illustrations of curve widening.

Whenever the driver's lane is being shifted—for example, when lanes are being added or eliminated—the shifting rate should be controlled using the following equations:

$$L = WS \qquad \text{for design speeds over 40 mi/h} \tag{2.5}$$

$$L = W\frac{S^2}{60} \qquad \text{for design speeds up to 40 mi/h} \tag{2.6}$$

where L = approach taper length, ft
W = offset width, ft
S = design speed, mi/h

Where lanes are being added but the driver is not being "forced" to follow the actual transition (such as in adding right turn lanes), the transition can occur in 50 ft (15 m) on most roadways or 100 ft (30 m) on freeway designs.

Pavement Cross Slopes. Roadways on tangent or relatively straight alignments where no superelevation is required are normally crowned (peaked) in the middle. Cross slopes are usually in the range of 0.015 to 0.020 ft/ft (m/m). Urban areas with curbed pavements are more likely to have a slope near the upper limit, while rural roadways tend to have a little flatter cross slope. The following guidelines are applicable to the location of the crown point:

- Crowns should be located at or near lane lines.
- For pavements with three or four lanes, no more than two should slope in the same direction.
- Undivided pavement sections should be crowned in the middle when the number of lanes is even, and at the edge of the center lane when the number is odd.
- Narrow raised median sections should be crowned in the middle, so that the majority of the pavement will drain to the outside.

www.EngineeringEBooksPdf.com

TABLE 2.21 Guide for Selecting Lane Width for Rural Areas[(A)]

Functional classification	Design year ADT	Minimum lane widths, ft,[(B)] for design speed, mi/h										
		20	25	30	35	40	45	50	55	60	65	70 or >
Interstate, other freeways and expressways	ALL	—	—	—	—	—	—	12	12	12	12	12
Arterial	> 4000	—	—	—	—	12	12	12	12	12	12	12
	2001–4000	—	—	—	—	12	12	12	12	12	12	12
	1001–2000	—	—	—	—	11	11	12	12	12	12	12
	400–1000	—	—	—	—	11	11	12	12	12	12	12
	< 400	—	—	—	—	11	11	12 (C)	12 (C)	12	12	12
Collector	> 4000	12	12	12	12	12	12	12	12	12	—	—
	2001–4000	12	12	12	12	12	12	12	12	12	—	—
	1001–2000	11	11	11	11	11	11	11	12	12	—	—
	400–1000	10	10	10	11	11	11	11	11	11	—	—
	< 400	10	10	10	10	10	10	10	11	11	—	—
Local	> 4000	12	12	12	12	12	12	12	12	12	—	—
	2001–4000	12 (D)	12 (D)	12 (D)	12 (D)	12 (D)	12 (D)	12	12	12	—	—
	1001–2000	10	11	11	11	11	11	11	12	12	—	—
	400–1000	10	10	10	10	11	11	11	11	11	—	—
	< 400	9	9	9	9	9	10	10	11	11	—	—

Conversions: 1 mi/h = 1.609 km/h, 1 ft = 0.305 m.

Notes:

(A) There may be some rural locations that are urban in character. An example would be a village where adjacent development and other conditions resemble an urban area. In such cases, urban design criteria may be used.

(B) The number of lanes should be determined by a capacity analysis.

(C) May be 11 ft on nonfederal projects if design year ADT includes less than 25 (B) and (C) truck units.

(D) An 11-ft lane width may be retained on reconstructed highways if the alignment and safety records are satisfactory.

Source: *Location and Design Manual*, Vol. 1, *Roadway Design*, Ohio Department of Transportation, with permission.

Shoulders. A shoulder is the area adjacent to the roadway that (1) when properly designed, can provide lateral support to the pavement, (2) is available to the motorist in emergency situations, and (3) can be used to maintain traffic during construction. *Graded shoulder width* is the width of the shoulder measured from the edge of the pavement to the intersection of the shoulder slope and the foreslope. *Treated shoulder width* is that portion of the graded shoulder that has been improved to at least stabilized aggregate or better. Figure 2.13 illustrates these definitions.

Four basic types of shoulders are used: (1) paved, (2) bituminous surface treated, (3) stabilized aggregate, and (4) turf. Paved shoulders may be rigid (concrete) or flexible (asphalt). Turf shoulders are usually used on low-volume, uncurbed, local roads. Tables 2.22 and 2.23 provide recommended shoulder widths and types based on functional classification and traffic volumes or locale.

www.EngineeringEBooksPdf.com

TABLE 2.22 Guide for Selecting Shoulders for Rural Areas[A]

Functional classification	Design year ADT	Graded width, ft: With barrier or foreslope steeper than 6:1	Graded width, ft: Without barrier 6:1 or flatter foreslope	Treated width, ft	Type (C)	Rounding, ft (B) for design speed, mi/h: ≥ 50	Rounding, ft (B) for design speed, mi/h: < 50	Guardrail offset, ft (from traveled way) (D)
Interstate, Other Freeways & Expressways	All	17′ Rt. 9′ Med. (E)	12′ Rt. 4′ Med. (F)	12′ Rt. (G) 4′ Med. (F)	Paved	10′	—	(H)
Arterial (K)	> 4000	14′	10′	10′	PVD (I)	8′	4′	12′
	2001–4000	12′	8′	8′	PVD (I)	8′	4′	10′
	1001–2000	10′	8′	6′	BIT.SRF.TRT.(L)	8′	4′	8′
	400–1000	10′	8′	6′	BIT.SRF.TRT.(L)	4′	4′	8′
	< 400	8′	8′	4′	STBL.AGG.	4′	4′	6′
Collector (K)	> 4000	12′	8′	8′(M)	BIT.SRF.TRT. (L)	8′	4′	10′(N)
	2001–4000	10′	8′	4′	BIT.SRF.TRT. (L)	8′	4′	8′(N)
	1001–2000	8′	6′(O)	4′	STBL.AGG.	8′	4′	6′(N)
	400–1000	6′	4′	4′	STBL.AGG.	4′	4′	4′
	< 400	6′	(P)	(P)	STBL. AGG	4′	4′	4′
Local	> 4000	12′	8′ (Q)	8′(M)	BIT.SRF.TRT.(L)	8′	4′	10′(N)
	2001–4000	10′	8′ (Q)	4′	BIT.SRF.TRT. (L)	8′	4′	8′(N)
	1001–2000	8′	6′(O)	4′	STBL.AGG	8′	4′	6′(N)
	400–1000	6′	4′	4′	STBL.AGG.	4′	4′	4′
	< 400	6′	(P)	(P)	STBL.AGG.	4′	4′	4′

Conversions: 1 mi/h = 1.609 km/h, 1 ft = 0.305 m.

(A) There may be rural locations that are urban in character. An example would be a village where adjacent development and other conditions resemble an urban area. In such cases, urban design criteria (Table 2.21) may be used.

(B) Rounding should be 4 ft where the foreslope begins beyond the clear zone or where guardrail is installed and foreslope is steeper than 6:1. No rounding is required when the foreslope is 6:1 or flatter.

(C) Turf shoulders may be used on nonstate maintained roads at option of local government if current year ADT includes less than 250 (B) and (C) trucks. Turf shoulders are not to be used on state-maintained roads.

(D) Concrete barrier may be placed at the edge of treated shoulder when used in lieu of guardrail.

www.EngineeringEBooksPdf.com

(E) If 6 or more lanes, use 17 ft. If the truck traffic is less than 250 DDHV use 15 ft.

(F) If 6 or more lanes, use 12 ft. If truck traffic is less than 250 DDHV, 10 ft treated width may be used.

(G) Use 10 ft if truck traffic is less than 250 DDHV. If 10 ft treated width is used, graded width may be reduced by 2 ft.

(H) Guardrail offset is treated width plus 2 ft.

(I) A fully paved shoulder is preferred, but may not be economically feasible. Therefore, a minimum 2 ft of the treated shoulder should be paved. The remainder of the treated shoulder may be either stabilized aggregate or bituminous surface–treated material according to the criteria stipulated in Notes (K) and (L).

(J) Use bituminous surface treated if design year ADT includes between 250 and 1000 (B) and (C) truck units.

(K) The median shoulder width criteria for interstates, other freeways and expressways shall apply to the medians of divided arterials and divided collectors.

(L) Stabilized aggregate may be used on state-maintained roads if the design year ADT includes less than 250 (B) and (C) truck units. Paved shoulders are recommended if the design year ADT includes over 1000 (B) and (C) truck units.

(M) Use 6 ft if design year ADT includes less than 501 (B) and (C) truck units. If 6 ft treated width is used, graded width may be reduced to 10 ft and minimum barrier offset will be 8 ft.

(N) Whenever a design exception is approved for graded shoulder width, the guardrail offset may be reduced but shall not be less than 4 ft.

(O) A 6-ft turf shoulder may be used with a 4:1 or flatter foreslope.

(P) See AASHTO'S Guidelines for Geometric Design for Very Low-Volume Local Roads for values.

(Q) An 8-ft graded shoulder may be used with a 4:1 or flatter foreslope.

Source: *Location and Design Manual*, Vol. 1, *Roadway Design*, Ohio Department of Transportation, with permission.

www.EngineeringEBooksPdf.com

TABLE 2.23 Guide for Selecting Lane Width and Shoulders for Urban Areas[a]

Functional classification	Locale	Lane width, ft		Minimum curbed shoulder width,[b] ft	
		Minimum	Preferred	Without parking lane	With parking lane[c]
Interstates, other freeways, and expressways	All	12	12	12 right paved, 4 median paved[d,e]	—
Arterial streets	50 mi/h or more	12	12	10 each side paved[f,g]	—
	Less than 50 mi/h	12[h]	12	1–2 paved	10–12 paved
Collector streets	Commercial or industrial	11	12	1–2 paved	9–10 paved
	Residential	11	12	1–2 paved	7–10 paved
Local streets	Commercial or industrial	11	12	1–2 paved	9 paved
	Residential	10[i]	11	1–2 paved	7 paved

Conversions: 1 mi/h = 1.609 km/h, 1 ft = 0.305 m.

[a]Use rural criteria (Tables 2.21 and 2.22) for uncurbed shoulders. Rural functional classification should be determined after checking the urban route extension into a rural area.

[b]See Sections 305.3.2 and 305.3.3 for use of curbs and notes on curb/guardrail relationships.

[c]Use minimum lane width if, in the foreseeable future, the parking lane will be used for through traffic during peak hours or continuously.

[d]Use 10 ft median shoulder on facilities with 6 or more lanes. Use 12 ft median shoulder on facilities with 6 or more lanes and when truck traffic exceeds 250 DDHV.

[e]May be reduced to 10 ft if the truck traffic is less than 250 DDHV.

[f]May be reduced to 8 ft if DHV is less than 250.

[g]The median shoulder width for divided arterials shall follow the median criteria for Interstates, other Freeways and Expressways.

[h]Lane width may be reduced to 11 ft where right-of-way is limited and current truck ADT is less than 250; however, on all Federal Aid Primary (FAP) roadways at least one 12-ft lane in each direction is required. FAP listings may be obtained from Office of Technical Services's Roadway Inventory reports.

[i]Lane width may be 9 ft where right-of-way is limited and current ADT is less than 250.

Source: *Location and Design Manual*, Vol. 1, *Roadway Design*, Ohio Department of Transportation, with permission.

Whenever practical, shoulders should be designed to be wide enough and strong enough to accommodate temporary traffic, especially on high-volume roadways. Figures 2.14, 2.15, and 2.16 provide information on recommended cross slopes [ft/ft (m/m)] and allowable grade breaks depending on the type of shoulder chosen.

2.3.2 Grading and Side Slopes

This section is concerned with the design of the slopes, ditches, parallel channels, and interchange grading. It incorporates into the roadside design the concepts of vehicular safety developed through dynamic testing. Designers are urged to consider flat foreslopes and backslopes, wide gentle ditch sections, and elimination of barriers.

Slopes. Several combinations of slopes and ditch sections may be used in the grading of a project. Details and use of these combinations are discussed in subsequent paragraphs. In general, slopes should be made as flat as possible to minimize the necessity for barrier protection and to maximize the opportunity for a driver to recover

www.EngineeringEBooksPdf.com

TABLE 2.24 Recommended Pavement Widening on Horizontal Curves, ft, for WB-50 Design Vehicles

	Pavement width on tangent, ft												
	24					22				20			
	Design speed, mi/h					Design speed, mi/h				Design speed, mi/h			
Degree of curve	30 to 39	40 to 49	50 to 59	60 to 69	70 and over	30 to 39	40 to 49	50 to 59	60 and over	30 to 39	40 to 49	50 to 59	60 and over
1°00′	0	0	0	0	0	1.0	1.0	1.0	1.0	1.5	2.0	2.0	2.0
2°00′	0	0.5	0.5	0.5	0.5	1.0	1.5	1.5	1.5	2.0	2.5	2.5	2.5
3°00′	0.5	1.0	1.0	1.0	1.0	1.5	2.0	2.0	2.0	2.5	3.0	3.0	3.0
4°00′	1.0	1.0	1.5	1.5	1.5	2.0	2.0	2.5	2.5	3.0	3.0	3.5	3.5
5°00′	1.5	1.5	2.0	2.5		2.5	3.0	3.0	3.0	3.5	3.5	4.0	4.0
6°00′	2.0	2.0	2.5	2.5		3.0	3.0	3.5	3.5	3.5	4.0	4.5	4.5
7°00′	2.0	2.0	3.0			3.0	3.5	4.0		4.0	4.5	5.0	
8°00′	2.5	3.0	3.0			3.5	4.0	4.0		4.5	5.0	5.0	
9°00′	3.0	3.0	3.5			4.0	4.0	4.5		5.0	5.0	5.5	
10°00′	3.0	3.5				4.0	4.5			5.5	5.5		
11°00′	3.5	4.0				4.5	5.0			5.5	6.0		
12°00′	4.0	4.0				5.0	5.0			6.0	6.0		
13°00′	4.0	4.0				5.0	5.0			6.0	6.0		
14°00′	4.5	4.5				5.5	5.5			6.5	6.5		
14°30′	4.5	5.0				5.5	5.5			6.5	6.5		
15°00′	5.0					6.0				7.0			
18°00′	5.5					7.0				7.5			
19°00′	6.0					7.0				8.0			
21°00′	6.5					7.5				8.5			
22°00′	6.5					7.5				8.5			
25°00′	7.5					8.5				9.5			
26°00′	7.5					8.5				8.5			
26°30′	8.0					9.0				10.0			

Conversions: 1 mi/h = 1.609 km/h, 1 ft = 0.305 m.

Note: Values less than 2.0 ft may be disregarded. Multiply table values by 1.5 for three lanes and by 2.0 for four lanes.

Source: *Location and Design Manual*, Vol. 1, *Roadway Design*, Ohio Department of Transportation, with permission.

control of a vehicle after leaving the traveled way. Regardless of the type of grading used, projects should be examined in an effort to obtain flat slopes at low costs. For example, fill slopes can be flattened with material that might otherwise be wasted, and backslopes can be flattened to reduce borrow.

To better understand the various types of grading, it is necessary to become familiar with the concept of a clear zone. *Clear zone* is defined as the unobstructed, relatively flat area provided beyond the edge of the traveled way for the recovery of errant vehicles and includes any shoulders or auxiliary lanes (Ref. 1, 2). Chapter 6 discusses the roadside safety aspects of designing for the clear zone, including the use of barriers to shield objects in the clear zone. In the following paragraphs, four types of roadside grading are described. The designer must select the appropriate one for the roadway being designed.

www.EngineeringEBooksPdf.com

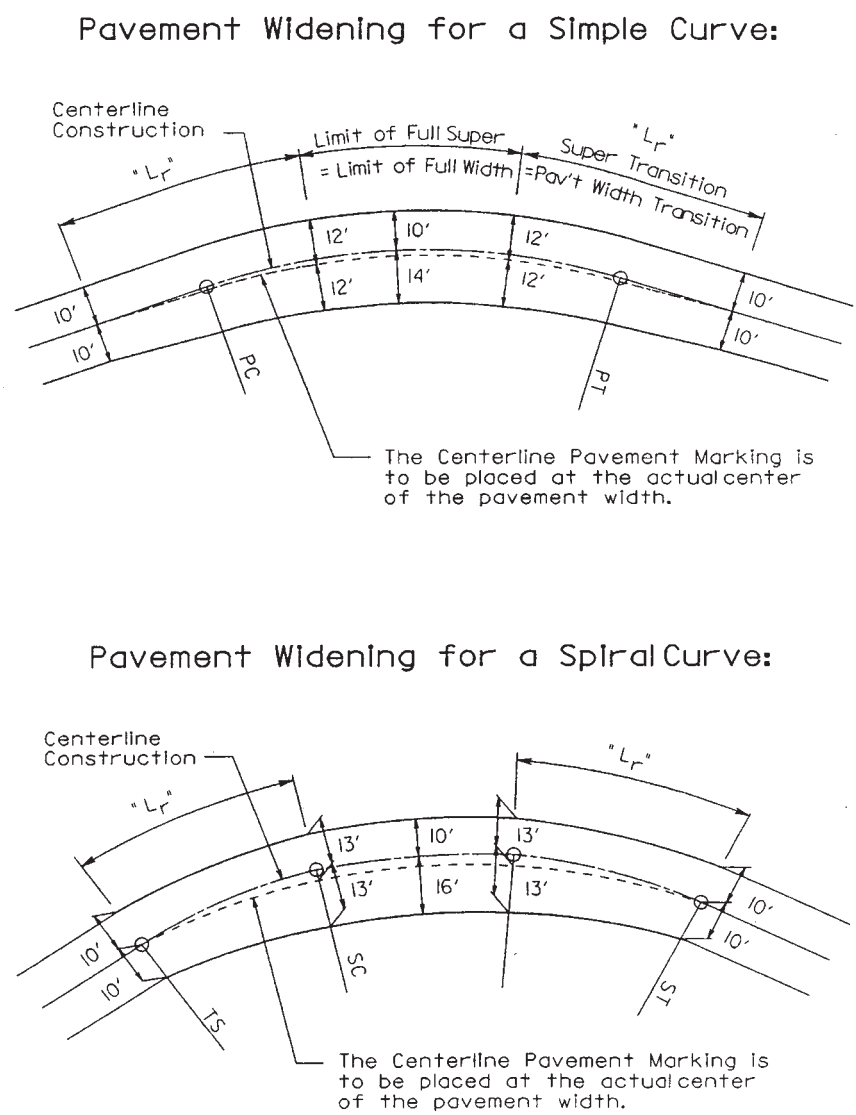

FIGURE 2.12 Location of pavement transition in relation to the superelevation transition.

Safety grading is the shaping of the roadside using 6:1 or flatter slopes within the clear zone area, and 3:1 or flatter foreslopes and recoverable ditches beyond the clear zone. Safety grading is used on interstate highways, other freeways, and expressways. Figures 2.17 and 2.18 show many of these details.

Clear zone grading is the shaping of the roadside using 4:1 or flatter foreslopes and traversable ditches within the clear zone area. Foreslopes of 3:1 may be used but are not measured as part of the clear zone distance. Clear zone grading is recommended

www.EngineeringEBooksPdf.com

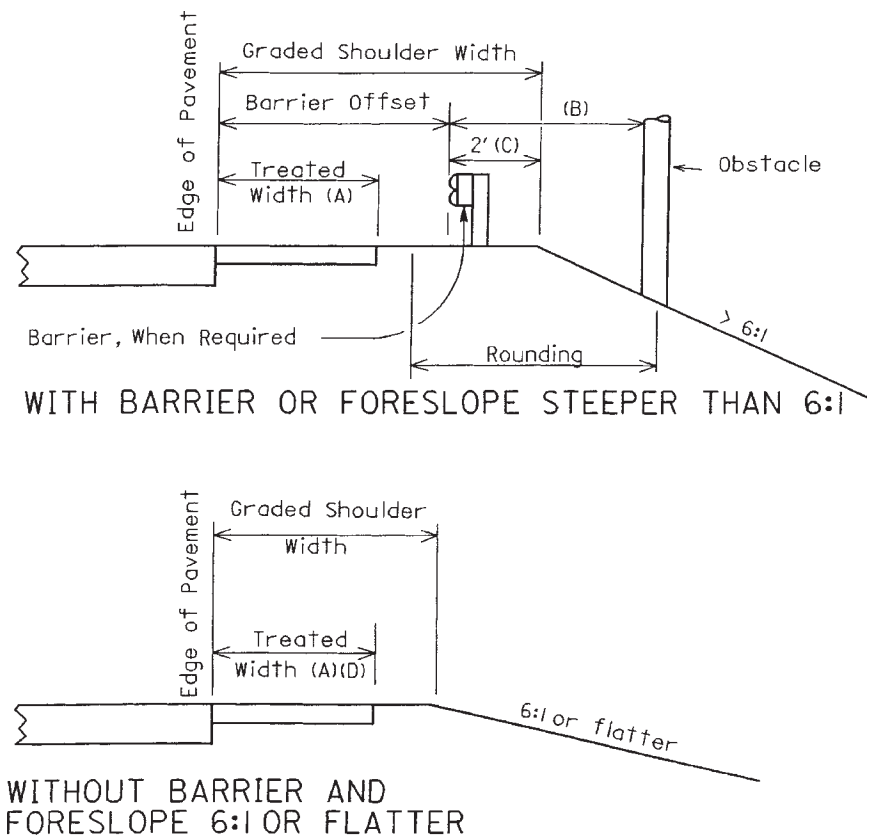

(A) Treated width includes that portion of the shoulder improved with stabilized aggregate or better.
(B) Minimum barrier clearance.
(C) 3' on interstate, other freeways and expressways.
(D) Treated shoulder width may equal graded shoulder width in some cases.

FIGURE 2.13 Cross sections of shoulders showing graded and treated shoulder widths. Conversions: 2 ft = 0.61 m, 3 ft = 0.91 m. (*From* Location and Design Manual, *Vol. 1*, Roadway Design, *Ohio Department of Transportation, with permission*)

for undivided rural facilities where the design speed exceeds 50 mi/h (80 km/h), the design hourly volume is 100 or greater, and at least one of the following conditions exists:

- The wider cross section is consistent with present or future planning for the facility.
- The project is new construction or major reconstruction involving significant length.
- The wider cross section can be provided at little or no additional cost.

www.EngineeringEBooksPdf.com

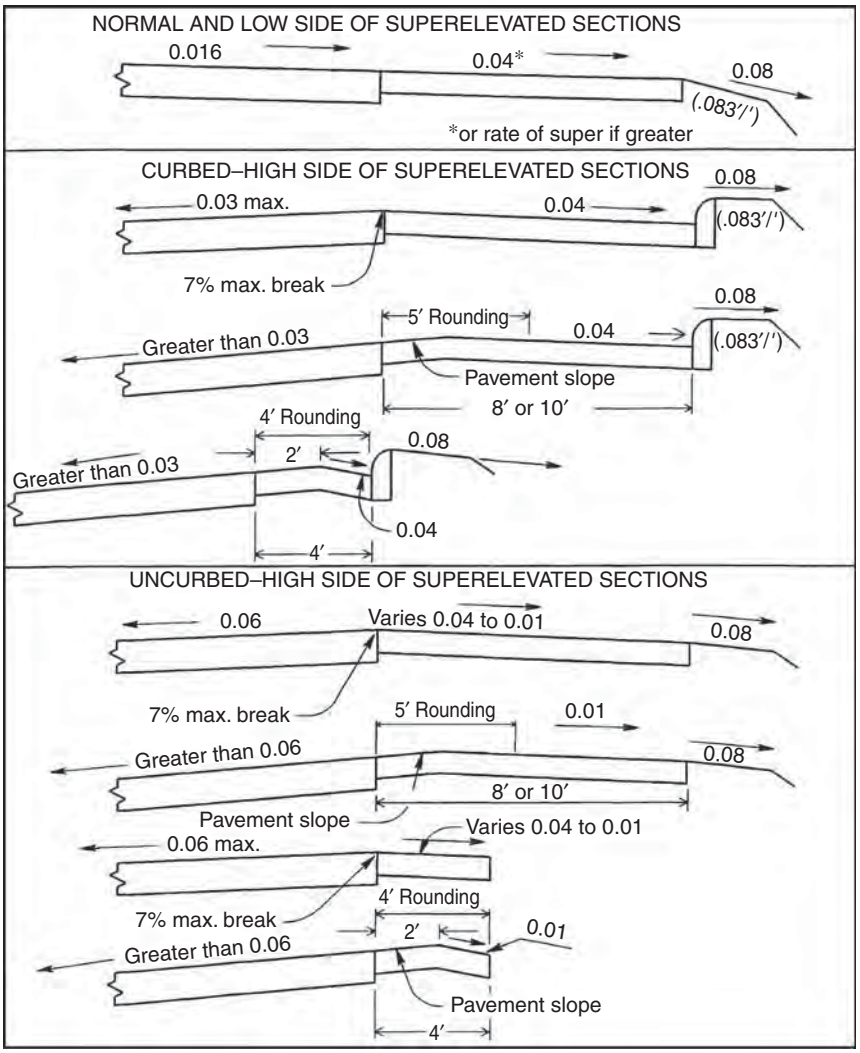

FIGURE 2.14 Recommended cross slopes and grade breaks for paved shoulders. Conversion: 1 ft = 0.305 m. (*From* Location and Design Manual, *Vol. 1*, Roadway Design, *Ohio Department of Transportation, with permission*)

Figure 2.19 shows examples of clear zone grading and traversable ditches.

Standard grading is the shaping of the roadside using 3:1 or flatter foreslopes and normal ditches. Standard grading is used on undivided facilities where the conditions for the use of safety grading or clear zone grading do not exist. The designer should ensure that any obstacles within the clear zone receive proper protection. Figure 2.20 shows examples of standard grading and normal ditches.

www.EngineeringEBooksPdf.com

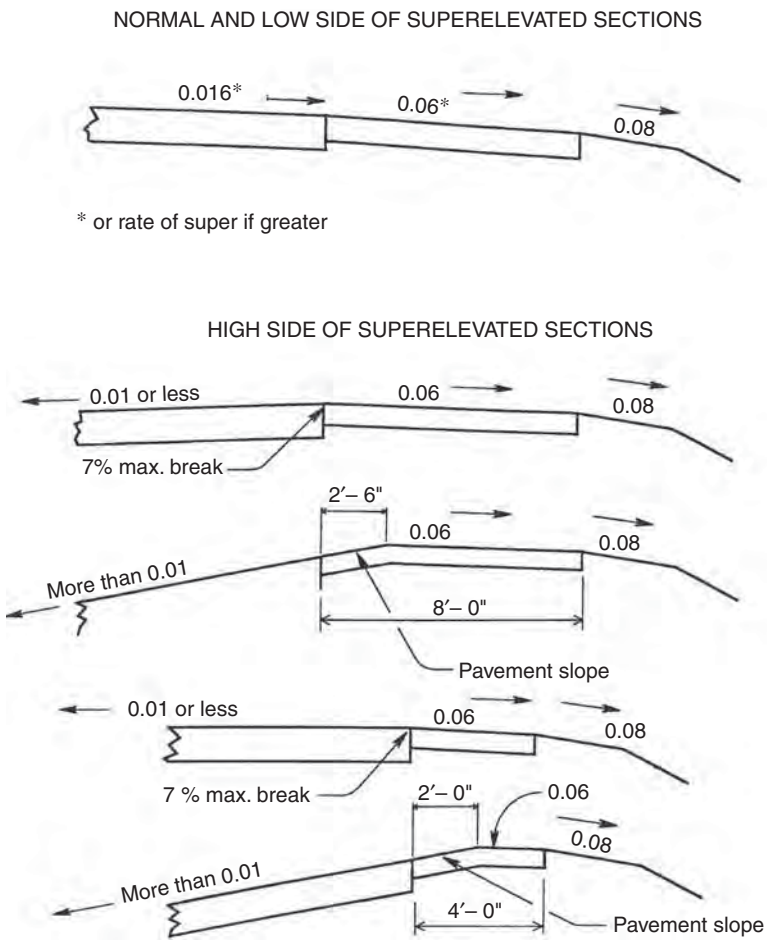

FIGURE 2.15 Recommended cross slopes and grade breaks for bituminous surface treated or stabilized aggregate shoulders. Conversion: 1 ft = 0.305 m. (*From* Location and Design Manual, *Vol. 1*, Roadway Design, *Ohio Department of Transportation, with permission*)

Barrier grading is the shaping of the roadside when a barrier is required for slope protection. Normally, 2:1 foreslopes and normal ditch sections are used. Figure 2.20 includes an example of barrier grading.

Rounding of Slopes. Slopes should be rounded at the break points and at the intersection with the existing ground line to reduce the chance of a vehicle's becoming airborne and to harmonize with the existing topography. Rounding at various locations is illustrated in Figs. 2.17 to 2.20.

Special Median Grading. Figure 2.21*c* shows some examples of median grading when separate roadway profiles are used.

www.EngineeringEBooksPdf.com

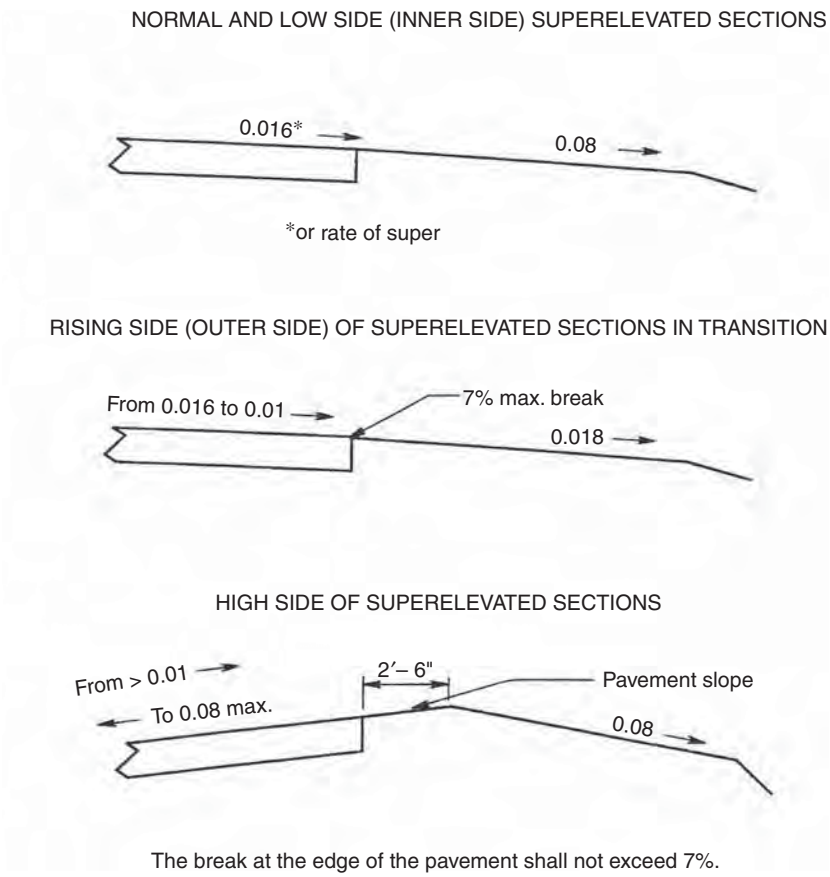

FIGURE 2.16 Recommended cross slopes and grade brakes for turf shoulders. Conversion: 1 ft = 0.305 m. (*From* Location and Design Manual, *Vol. 1*, Roadway Design, *Ohio Department of Transportation, with permission*)

Rock and Shale Slopes. In rock or shale cuts, the maximum rate of slope should be determined by a soils engineer. In deep rock or shale cuts where slopes are steeper than 1:1, a 10-ft-wide (3.05-m) bench should be provided between the top of the ditch backslope and the toe of the rock face as illustrated in Fig. 2.21*a*. In shale cuts, the designer should not use backslopes steeper than 2:1 unless excessive waste would result. In any event, 2:1 slopes should be used for all shale cut sections less than 20 ft (7 m) in depth, and the bench should be omitted. In this discussion, depth of cut is measured from the top of shale or rock to the ditch flow line. Backslopes steeper than 2:1 should not be used in rock cuts until the depth exceeds 16 ft (5 m). In such cases the bench may be omitted.

Curbed Streets. Figure 2.22 shows typical slope treatments next to curbed streets.

Driveways and Crossroads. At driveways or crossroads, where the roadside ditch is within the clear zone distance and where clear zone grading can be obtained, the ditch and pipe should be located as shown on Fig. 2.23.

www.EngineeringEBooksPdf.com

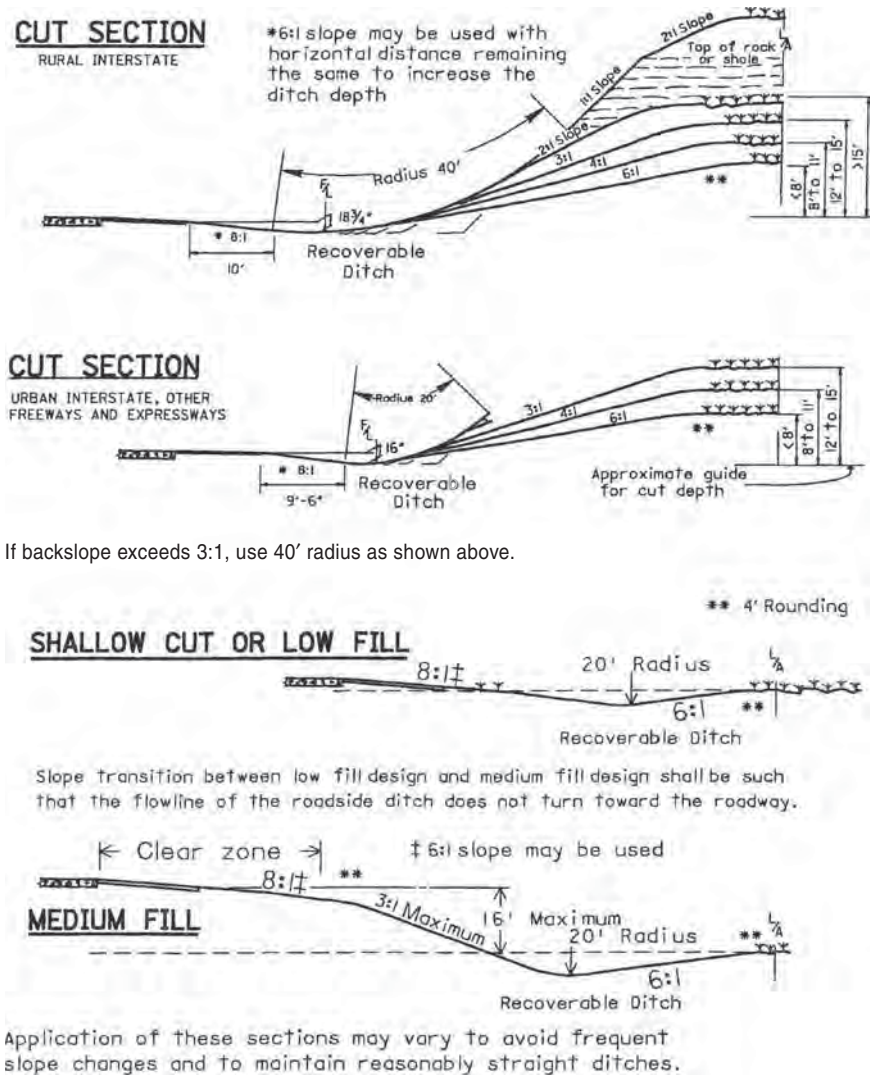

FIGURE 2.17 Cross sections showing safety grading for four different conditions. Conversion: 1 ft = 0.305 m. (*From* Location and Design Manual, *Vol. 1*, Roadway Design, *Ohio Department of Transportation, with permission*)

Ditches. When the depth or velocity of the design discharge accumulating in a roadside or median ditch exceeds the desirable maximum established for the various highway classifications, a storm sewer will be required to intercept the flow and carry it to a satisfactory outlet. If right-of-way and earthwork considerations are favorable, a deep, parallel side ditch (see Fig. 2.21*b*) may be more practical and should be considered instead of a storm sewer. In some cases where large areas contribute flow to a highly erodible soil cut, an intercepting ditch may be considered near the top of the cut to intercept the flow from the

www.EngineeringEBooksPdf.com

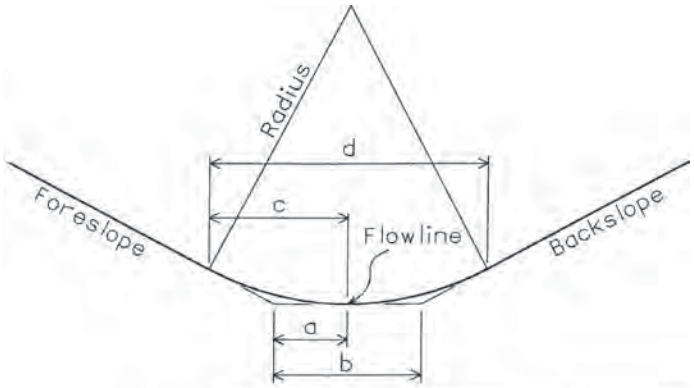

Fore-slope	40' RADIUS		Backslope 6:1		4:1		3:1		2:1		1:1	
	a	c	b	d	b	d	b	d	b	d	b	d
8:1	2'6"	5'0"	6'0"	11'6"	7'6"	14'8"	9'0"	17'7"	12'0"	22'10"	19'0"	33'3"
6:1	3'4"	6'7"	6'8"	13'2"	8'4"	16'3"	9'10"	19'3"	12'9"	24'6"	20'0"	34'10"

Fore-slope	20' RADIUS		Backslope 6:1		4:1		3:1	
	a	c	b	d	b	d	b	d
8:1	1'3"	2'6"	3'0"	5'9"	3'9"	7'4"	4'6"	8'10"
6:1	1'8"	3'3"	3'4"	6'7"	4'2"	8'2"	4'11"	9'7"
4:1	2'6"	4'10"	4'2"	8'2"	5'0"	9'8"	5'9"	11'2"
3:1	3'3"	6'4"	4'11"	9'7"	5'9"	11'2"	6'6"	12'8"

FIGURE 2.18 Details of ditch rounding for safety grading. Conversions: 1 ft = 0.305 m, 1 in = 0.0254 m. (*From* Location and Design Manual, *Vol. 1*, Roadway Design, *Ohio Department of Transportation, with permission*)

outside and thereby relieve the roadside ditch. Constant-depth ditches (usually 18 in or 0.46 m deep) are desirable. Where used, the minimum pavement profile grades should be 0.24 to 0.48 percent. Where flatter pavement grades are necessary, separate ditch profiles are developed and the ditch flow line elevations shown on each cross section.

Parallel Channels. Where it is determined that a stream intercepted by the roadway improvement is to be relocated parallel to the roadway, the channel should be located beyond the limited access line (or highway easement line) in a separate channel easement. This arrangement locates the channel beyond the right-of-way fence, if one is to be installed. Figure 2.21*b* shows a parallel channel section. This does not apply to conventional intercepting erosion control ditches located at the top of cut slopes in rolling terrain.

In areas of low fill and shallow cut, protection along a channel by a wide bench is usually provided. Fill slope should not exceed 6:1 when this design is used, and maximum height from shoulder edge to bench should generally not exceed 10 ft (3.05 m). If it should become necessary to use slopes steeper than 6:1, guiderail may be necessary

www.EngineeringEBooksPdf.com

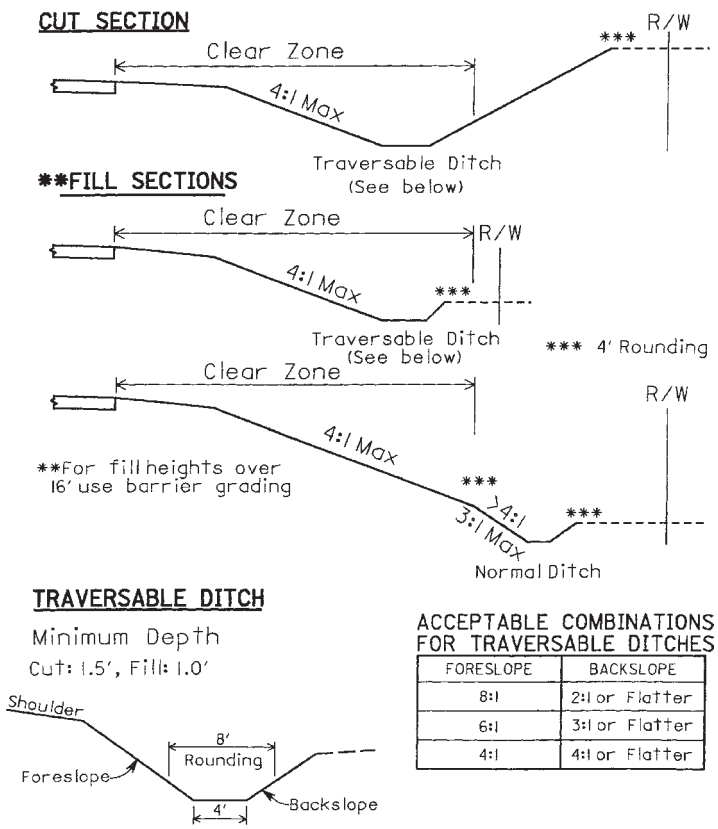

ACCEPTABLE COMBINATIONS FOR TRAVERSABLE DITCHES

FORESLOPE	BACKSLOPE
8:1	2:1 or Flatter
6:1	3:1 or Flatter
4:1	4:1 or Flatter

FIGURE 2.19 Examples of clear zone grading and traversable ditches. Conversion: 1 ft = 0.305 m. (*From* Location and Design Manual, *Vol. 1*, Roadway Design, *Ohio Department of Transportation, with permission*)

and fill slopes as steep as 2:1 may be used. In cut sections 5 ft (1.52 m) or more in depth, earth barrier protection can be provided. This design probably affords greater protection where very deep channels are constructed and requires less excavation. Where the sections alternate between cut and fill and it is desired to use but a single design, earth barrier protection is less costly if waste excavation material is available. Likewise, bench protection is less costly if borrow is needed on the project as a whole.

Earth bench or earth barrier protection provided adjacent to parallel channels should not be breached for any reason other than to provide an opening for a natural or relocated stream that requires a drainage structure larger in rise than 42 in (1.07 m). Outlet pipes from median drains or side ditches should discharge directly into the parallel channel.

Channels and toe-of-slope ditches, used in connection with steep fill slopes, are both removed from the normal roadside section by benches. The designer should establish control offsets to the center of each channel or ditch at appropriate points that govern alignment so the flow will follow the best and most direct course to the outlet. Bench width should be varied as necessary.

www.EngineeringEBooksPdf.com

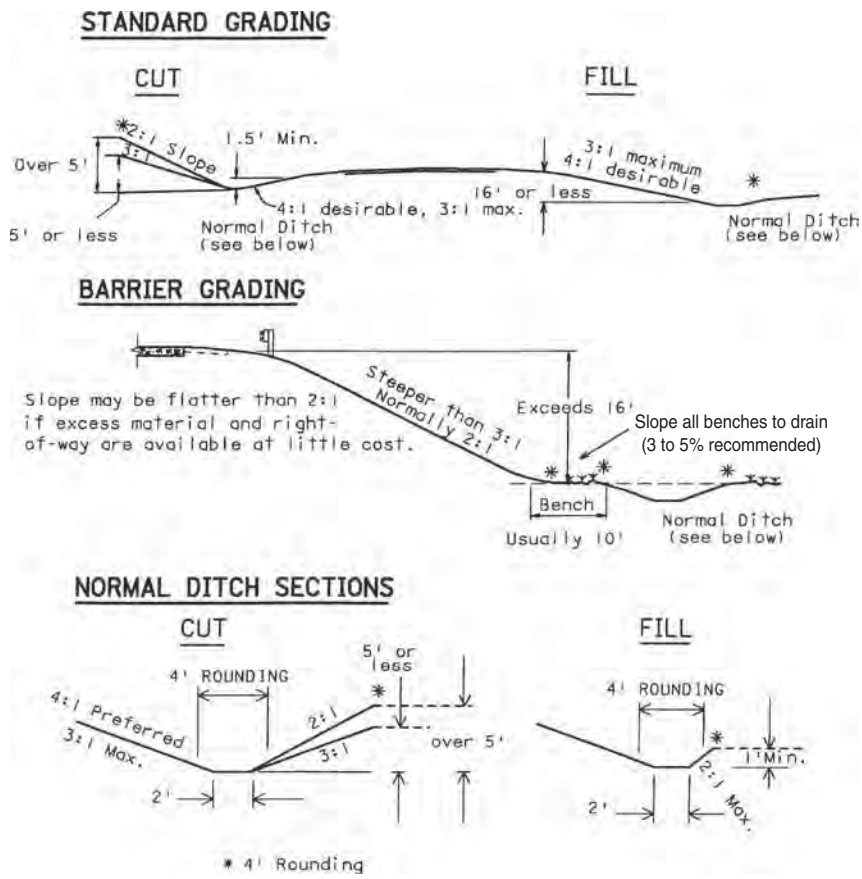

FIGURE 2.20 Examples of standard grading and normal ditches. Conversion: 1 ft = 0.305 m. (*From* Location and Design Manual, *Vol. 1*, Roadway Design, *Ohio Department of Transportation, with permission*)

Interchange Grading. Interchange interiors should be contour-graded so that maximum safety is provided and the least amount of guiderail is required. Figures 2.24 and 2.25 show examples. The generous use of flat slopes (6:1 or flatter) will also be easier for maintenance crews to work with. Sight distance is critical for passenger vehicles on ramps as they approach entrance or merge areas. Therefore, sight distance should be unobstructed by landscaping, earth mounds, or other barriers on the merging side of the vehicle.

Crossroads. At a road crossing within an interchange area, bridge spill-through slopes should be 2:1, unless otherwise required by structure design. They should be flattened to 3:1 or flatter in each corner cone and maintained at 3:1 or flatter if within the interior of an interchange. Elsewhere in interchange interiors, fill slopes should not exceed 3:1.

Ramps. Roadside design for ramps should be based on Fig. 2.17 or 2.18, depending on the mainline grading concept.

www.EngineeringEBooksPdf.com

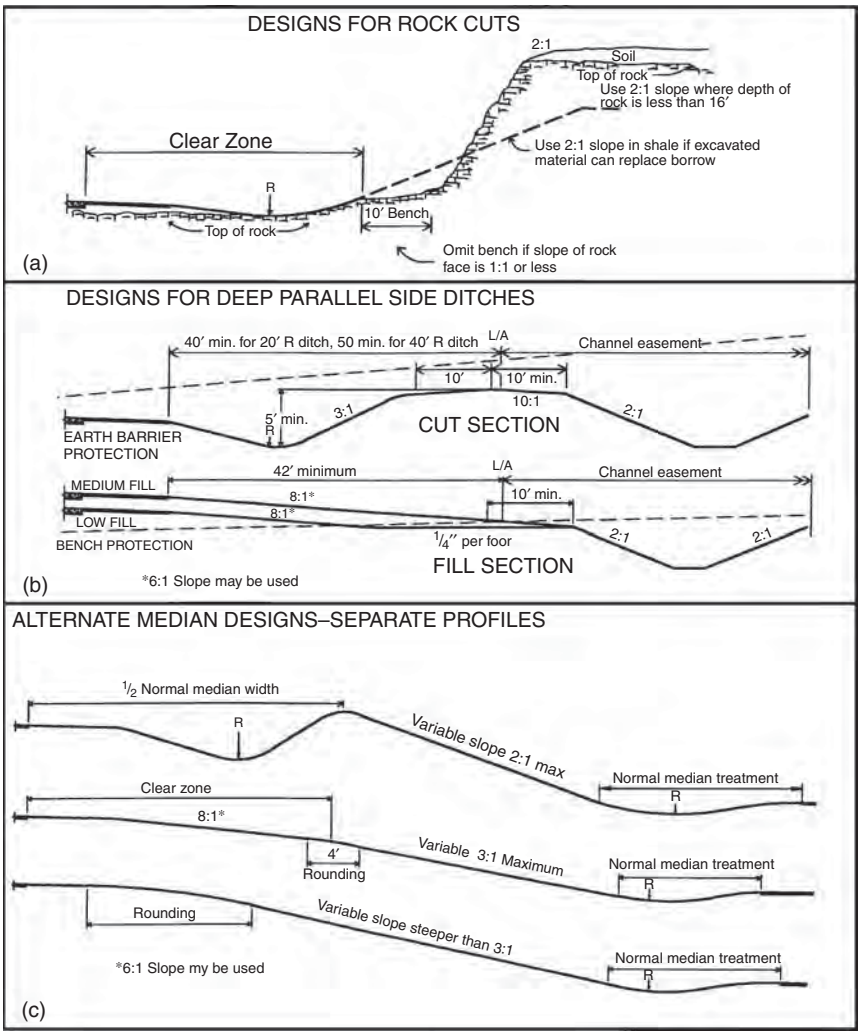

FIGURE 2.21 Examples of special designs for grading. (*a*) Designs for rock cuts. (*b*) Designs for deep, parallel side ditches. (*c*) Alternate median designs. Conversion: 1 ft = 0.305 m. (*From* Location and Design Manual, *Vol. 1*, Roadway Design, *Ohio Department of Transportation, with permission*)

Gore Area. Gore areas of trumpets, diamonds, and exteriors of loops adjacent to the exit point should be graded to obtain slopes of 6:1 or flatter, which will not endanger a vehicle unable to negotiate the curvature because of excessive speed.

Trumpet Interiors. Interior areas of trumpets (Fig. 2.24) should be graded to slopes not in excess of 8:1, sloping downward from each side of the triangle to a single, rounded low point. Roadside ditches should not be used. Exteriors should be graded in accordance with mainline or ramp standards.

www.EngineeringEBooksPdf.com

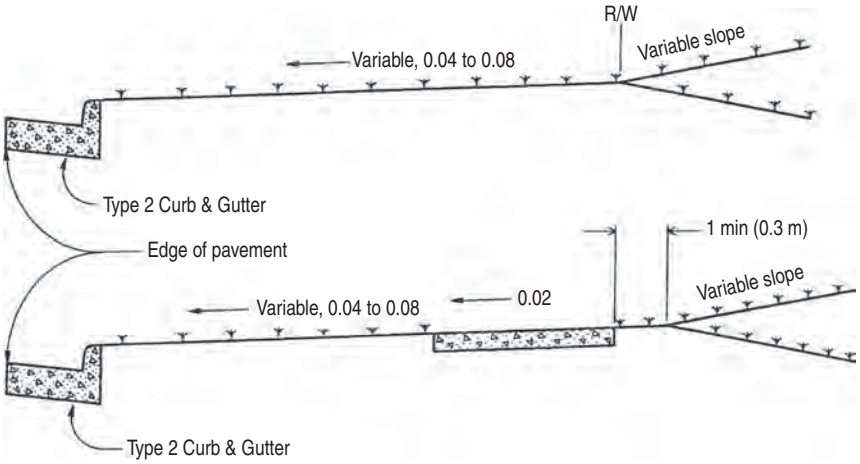

FIGURE 2.22 Examples of slope treatment adjacent to curbed streets. (*From* Location and Design Manual, *Vol. 1,* Roadway Design, *Ohio Department of Transportation, with permission*)

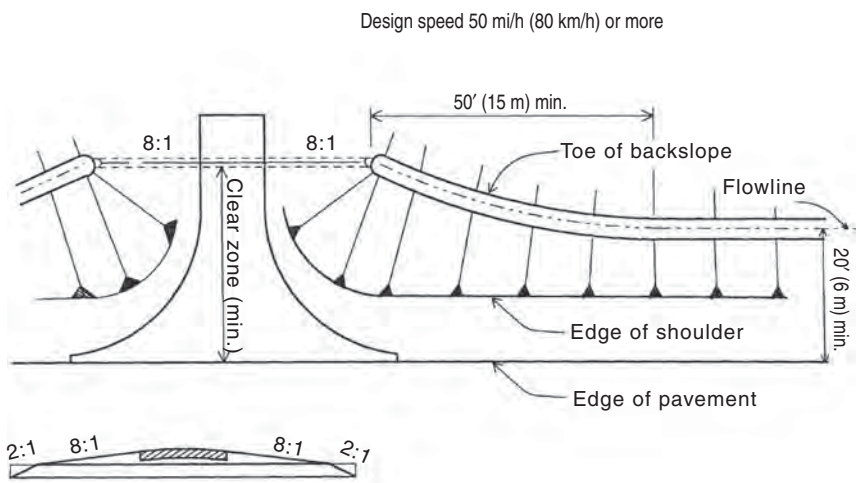

To be used on clear zone grading projects where the roadside ditch flowline is located within the clear zone distance

FIGURE 2.23 Slopes and ditches at driveway and crossroad in cut or low fill for use on clear zone grading projects where ditch is within clear zone distance. (*From* Location and Design Manual, *Vol. 1,* Roadway Design, *Ohio Department of Transportation, with permission*)

www.EngineeringEBooksPdf.com

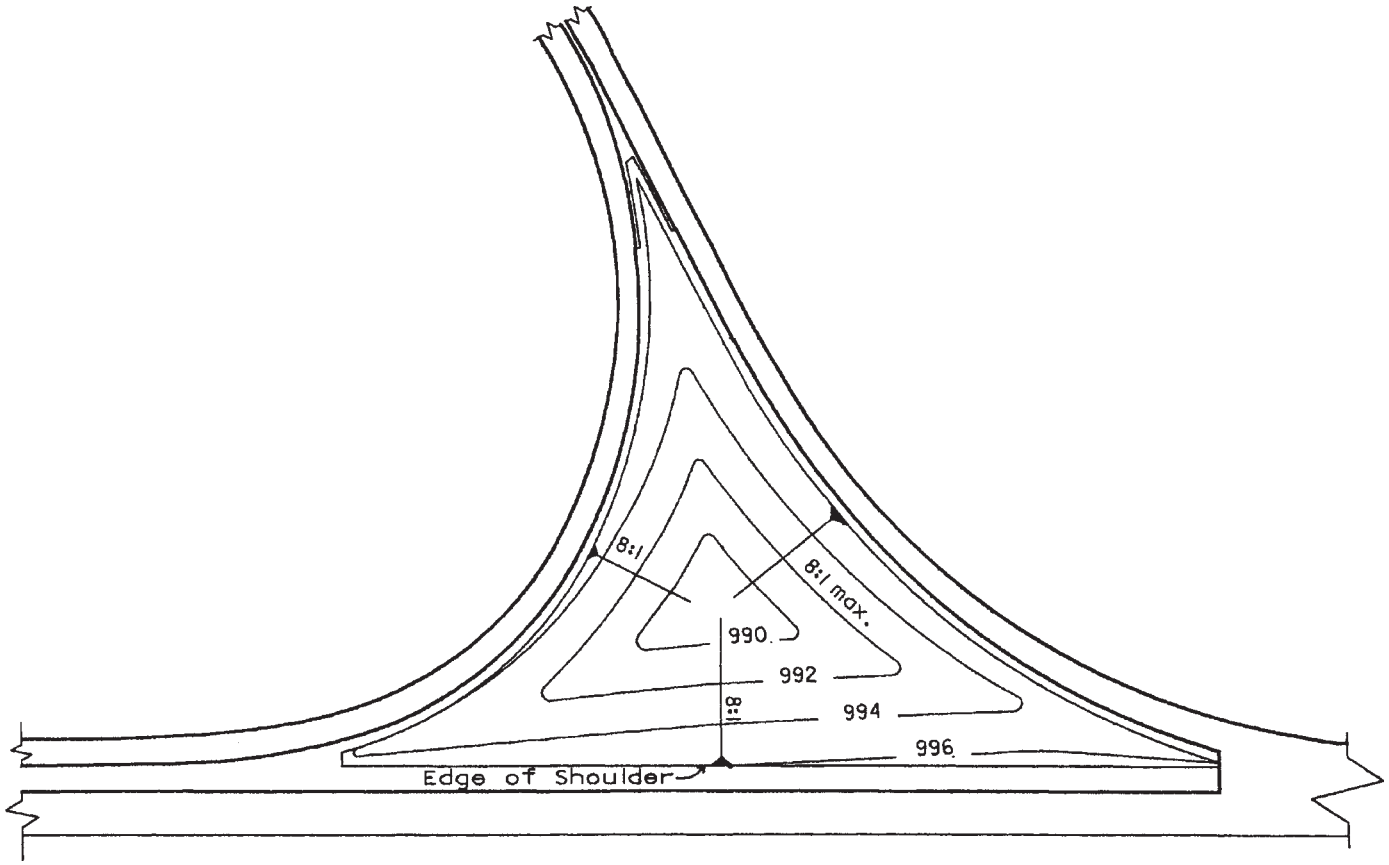

FIGURE 2.24 Contour grading of trumpet interior at interchange with contour elevations in feet. Conversion: 1 ft = 0.305 m. (*From* Location and Design Manual, *Vol. 1,* Roadway Design, *Ohio Department of Transportation, with permission*)

www.EngineeringEBooksPdf.com

Loop Interiors. In cut, the interior of a loop should be graded to form a normal ditch section adjacent to the lower part of the loop, and the backslope should be extended to intersect the opposite shoulder of the upper part of the loop. This applies unless the character and the amount of material or the adjacent earthwork balances indicate that the cost would be prohibitive. Roadside cleanup and landscaping should be provided in undisturbed areas of loop interiors. If channels are permitted to cross the loop interior, slopes should not be steeper than 4:1. Figure 2.25 shows an example.

Diamond Interiors. If the location of the ramp intersection at the crossroad is relatively near the main facility, a continuous slope between the upper roadway shoulder and the lower roadway ditch will provide the best and most pleasing design. If the ramp

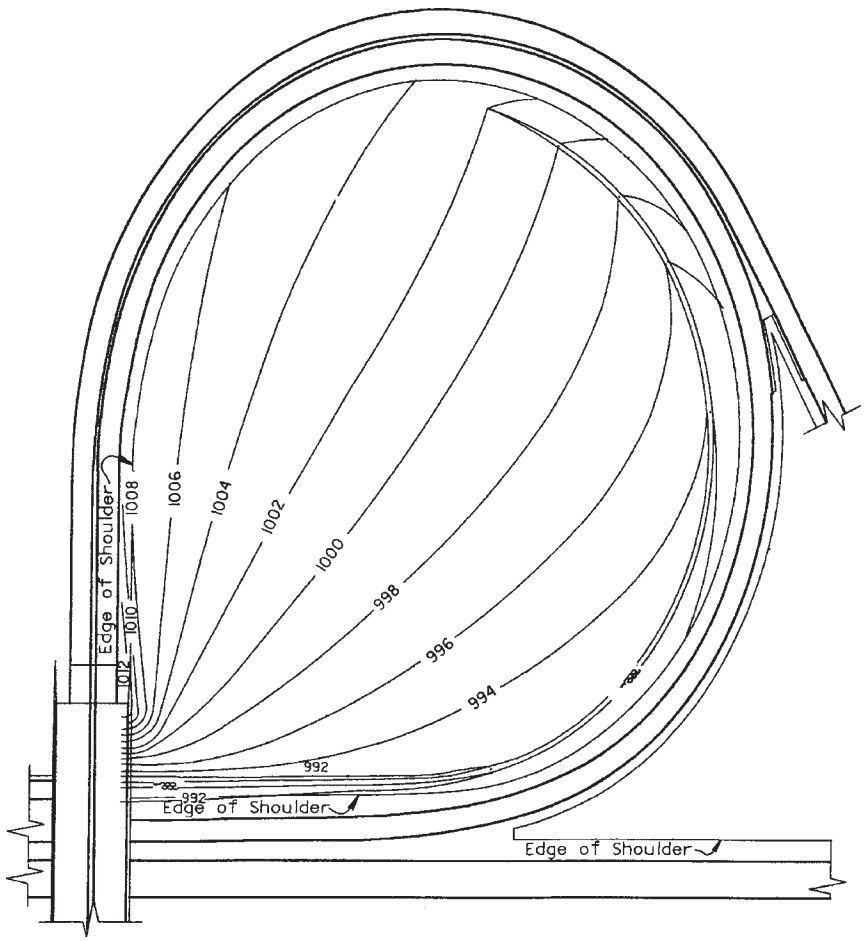

FIGURE 2.25 Contour grading of loop interior in cut section at interchange with contour elevations shown in feet. Conversion: 1 ft = 0.305 m. (*From* Location and Design Manual, *Vol. 1,* Roadway Design, *Ohio Department of Transportation, with permission*)

www.EngineeringEBooksPdf.com

intersection at the crossroad is located a considerable distance from the main facility, then both ramp and mainline roadsides should have independent designs, until the slopes merge near the gore.

If the quadrant is entirely, or nearly so, in cut, the combination of a 3:1 backslope at the low roadway ditch and a gentle slope down from the high roadway shoulder will provide the best design in the wide portion of the quadrant. Approaching the gore, the slopes should transition to continuous 4:1 and 6:1 or flatter slopes. Quadrants located entirely in fill areas should have independently designed roadways for ramp, mainline, and crossroad. Each should be provided with normal slopes not greater than 3:1, with the otherwise ungraded areas sloped to drain without using ditches. If the quadrant is located part in cut and part in fill, the best design features a gentle fill slope at the upper roadway and a gentle backslope at the lower roadway, joined to a bench at the existing ground level that is sloped to drain. The combination of a long diamond ramp having gentle alignment with a loop ramp in the same interchange quadrant is not to be treated as a trumpet. Each ramp should be designed independently of the other in accordance with the suggested details set forth above.

2.3.3 Bridge Criteria

Although bridge engineering is discussed in Chap. 4, information on pertinent physical dimensions is presented here. Lateral clearance at underpasses and vertical clearance over roadways, as used in Ohio, are given in Table 2.25 for new and reconstructed bridges. The table notes provide a good insight into when variations from the standards are allowed.

2.3.4 Interchange Elements

Cross-section information pertaining to interchange elements, such as ramps and directional roadways, is given in Fig. 2.26. This information includes pavement and shoulder dimensions for acceleration-deceleration lanes, one- and two-lane directional roadways, and medians between adjacent ramps. Notice that for a single-lane ramp, the shoulder and guiderail offset distances are greater on the driver's right-hand side than on the left. This is to provide more width for drivers to pull over in emergencies and to allow people a better opportunity to go around disabled vehicles.

2.3.5 Medians

A median is a desirable element on all streets or roads with four or more lanes. The principal functions of a median are to prevent interference of opposing traffic, to provide a recovery area for out-of-control vehicles, to provide areas for emergency stopping and left turn lanes, to minimize headlight glare, and to provide width for future lanes. A median should be highly visible both day and night and in definite contrast to the roadway.

Width. The width of a median is the distance between the inside edges of the pavement. See Fig. 2.27 for examples of various medians. The width depends upon the type of facility, topography, and available right-of-way. In rural areas with flat or rolling terrain, the desirable median width for freeways is 60 to 84 ft (18 to 26 m). Although the minimum median width is normally 40 ft (12 m), narrower medians may be used in rugged terrain. A constant-width median is not necessary, and in fact,

www.EngineeringEBooksPdf.com

TABLE 2.25 Recommended Lateral and Vertical Clearances for New and Reconstructed Bridges

Functional class	Traffic: Design year ADT	Lateral clearances, ft: On bridge[a]: Rural: Minimum	Lateral clearances, ft: On bridge[a]: Rural: Preferred	Lateral clearances, ft: On bridge[a]: Urban, minimum	Lateral clearances, ft: Under bridge[b]: Minimum	Lateral clearances, ft: Under bridge[b]: Preferred	Vertical clearance over surfaced roadway, ft[c]: Minimum	Vertical clearance over surfaced roadway, ft[c]: Preferred
Interstates, Freeways and expressways	All	Right, 12[d,e] Left, 4[d,i]	Right, 14[f,g] Left, 6[g,j]	For curbed shoulders, use shoulder width, Table 2.21. For uncurbed shoulders, use rural criteria at left.	Curbed treated shoulder width (Fig. 2.24) plus barrier clearance measured from the face of the barrier to the shielded object.[k]	Clear zone width[p]	16.5[h]	17.0
Arterials	> 4000	10[d]	12		[k, l]		16.5[h]	17.0
	2001–4000	8[d]	10					
	1001–2000	6[d]	8					
	400–1000	6[d]	8					
	< 400	4	6					
Collectors	> 4000	8[m]	10		[l]		14.5	15.0
	2001–4000	4[m]	8					
	1001–2000	4[m,n]	6					
	400–1000	4[m,n]	4					
	< 400	4[m,o]	4					
Locals	> 4000	8[m]	10		[l]		14.5	15.0
	2001–4000	3	8					
	1001–2000	3	6					
	400–1000	3	4					
	≤ 400	2	4					

www.EngineeringEBooksPdf.com

Conversion: 1 ft = 0.305 m.

[a]Distance measured from edge of the traveled lane to face of curb or railing if no curb is provided.

[b]Distance measured from edge of traveled lane to face of walls or abutments and piers.

[c]To minimize structure cost, design tolerances for clearances are plus 4 in, minus 0 in. Sign supports and pedestrian structures have a 1-ft additional clearance. Clearances shown are over paved shoulder as well as pavement width.

[d]If bridge is considered to be a major structure having a length of 200 ft or more, the width may be reduced, subject to economic studies, but to no less than 4 ft.

[e]Where the truck DDHV is 250 or less, may be reduced 2 ft.

[f]Where the truck DDHV is 250 or less, the right shoulder width may be reduced 2 ft.

[g]Where concrete barrier is used on the approach slabs or in advance of the bridge, the preferred shoulder width will equal the minimum shoulder width.

[h]A 16.5-ft minimum vertical clearance applies to all rural sections and the single designated route in urban areas. On other urban routes, not on the single designated route, the vertical clearance should not be less than 15.5 ft.

[i]If 6 or more lanes, provide 12 ft width. Where truck DDHV is 250 or less, the left shoulder bridge width may be reduced by 2 ft.

[j]If 6 or more lanes, provide 14 ft width. Where the truck DDHV is 250 or less, the left width may be reduced 2 ft.

[k]In locations with restricted right-of-way, may be reduced to a clearance of 8.0 ft right side, 4.5 ft median side, plus barrier clearance, except where footnote *l* applies.

[l]May be reduced to a clearance of 2 ft plus barrier clearance on urban streets with restricted right-of-way and a design speed less than 50 mi/h (80 km/h).

[m]May be 3-ft width if bridge length exceeds 100 ft.

[n]May be 3-ft width if turf shoulder is used.

[o]May be 2-ft width if turf shoulder is used.

[p]Clear zone width is defined in Art. 6.2.

Source: *Location and Design Manual,* Vol. 1, *Roadway Design,* Ohio Department of Transportation, with permission.

www.EngineeringEBooksPdf.com

INTERCHANGE ELEMENT	TOTAL PVMT. WIDTH (ft)	GRADED SHLDR. WIDTH (ft) LEFT: WITH BARRIER OR FORE-SLOPE STEEPER THAN 6:1	GRADED SHLDR. WIDTH (ft) LEFT: W/O BARRIER SLOPES 6:1 OR FLATTER	GRADED SHLDR. WIDTH (ft) RIGHT: WITH BARRIER OR FORE-SLOPE STEEPER THAN 6:1	GRADED SHLDR. WIDTH (ft) RIGHT: W/O BARRIER SLOPES 6:1 OR FLATTER	PAVED SHLDR. WIDTH (ft) LT	PAVED SHLDR. WIDTH (ft) RT	NORMAL ROUNDING (ft) (D)	NORMAL BARRIER OFFSET LT	NORMAL BARRIER OFFSET RT
RAMP	16 (A)	9 (B)	6	11 (B)	8	3	6	10	6	8
1-LANE DIRECTIONAL ROADWAY	16 (A)	9 (B)	6	11 (B)	8	4	6	10	6	8
2-LANE DIRECTIONAL ROADWAY	24	9 (B)	6	15 (C)	10 (C)	4	10	10	6	12 (C)
ACCEL/DECEL LANE OR COMBINED	VARIABLE	NA	NA	13 (C)	8 (C)	NA	8	10	NA	10 (C)

(A) Use 18′ when inside pavement edge radius is less than 200′.

(B) May be reduced 1′ if the face of the mainline barrier is 2′ from the outside edge of the graded shoulder.

(C) Or match mainline dimension if lesser.

(D) Rounding is 4′ when barrier is used. No rounding is required when foreslope is 6:1 or flatter.

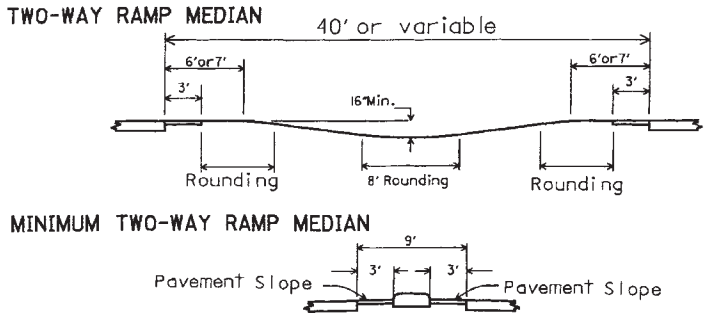

FIGURE 2.26 Cross-section information for interchange elements—pavement, shoulders, and medians. Conversion: 1 ft = 0.305 m. (*From* Location and Design Manual, *Vol. 1,* Roadway Design, *Ohio Department of Transportation, with permission*)

variable-width medians and independent profiles may be used for the two roadways. Narrow medians with a barrier (barrier medians) are normally used in urban areas. Under normal design, the median width will vary depending on the width of the barrier and the shoulder width required (Table 2.23).

Types. Medians are divided into types depending upon width and treatment of the median area and drainage arrangement. In general, raised or barrier medians are applicable to urban areas, while wide, depressed medians apply to rural areas. Figure 2.27 shows examples. Medians in rural areas are normally depressed to form a swale in the center and are constructed without curbs. The type of median used in an urban area

www.EngineeringEBooksPdf.com

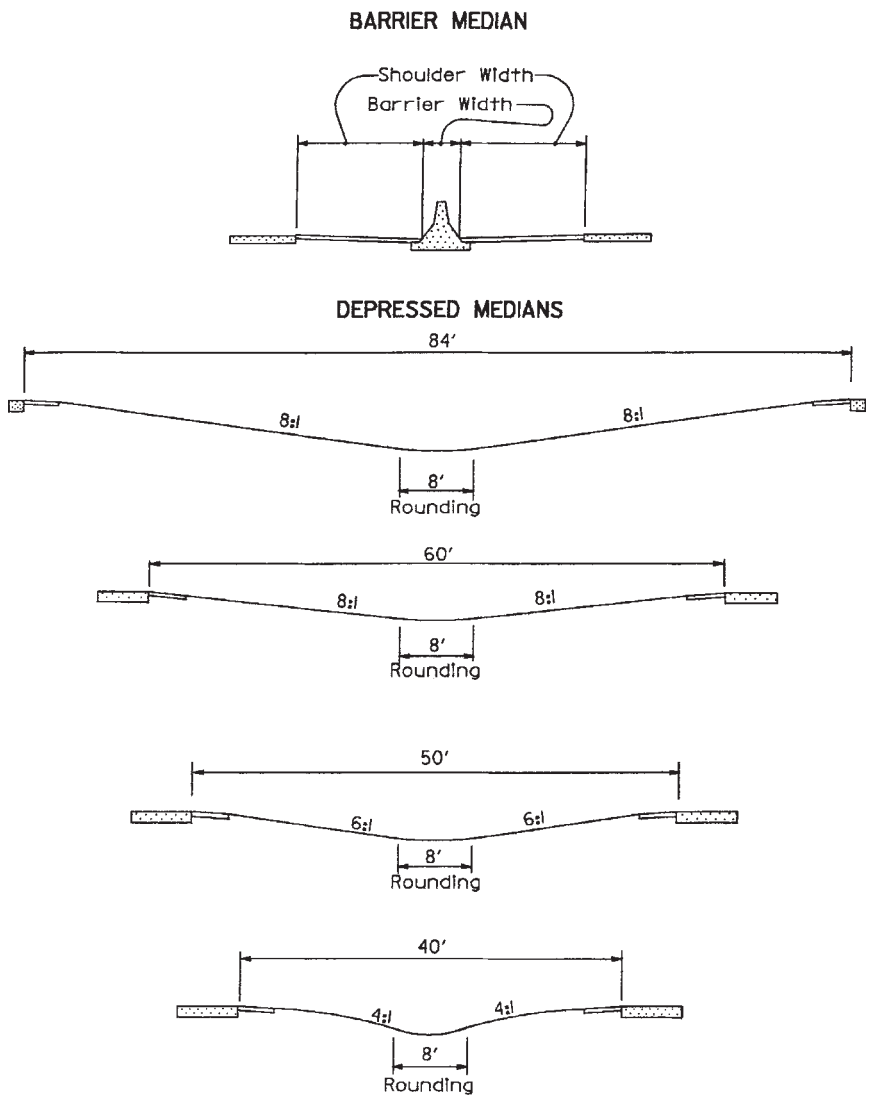

FIGURE 2.27 Typical designs for medians. Conversion: 1 ft = 0.305 m. (*From* Location and Design Manual, *Vol. 1,* Roadway Design, *Ohio Department of Transportation, with permission*)

depends on the traffic volume, speed, degree of access, and available right-of-way. On major streets with numerous business drives, a median consisting of an additional lane, striped as a continuous two-way left turn lane, is appropriate. A solid 6-in-high (0.15-m) lane concrete median may be used in low-speed areas (where the design speed is 40 mi/h (64 km/h) or less) and where an all-paved section is desired and a wider median cannot be justified. Barrier medians are normally recommended for urban facilities when the design speed is over 40 mi/h (64 km/h). However, care must be

www.EngineeringEBooksPdf.com

exercised when barrier medians are used on expressways with unsignalized at-grade intersections because of sight distance limitations and end treatments of the barrier.

U-Turn Median Openings. U-turn median openings may be provided on expressways, freeways, or interstate highways with nonbarrier medians where space permits and there is a need. U-turns may be needed for proper operation of police and emergency vehicles, as well as for equipment engaged in physical maintenance, traffic service, and snow and ice control. U-turn crossings should not be constructed in barrier-type medians. When U-turn median openings are permitted, it is intended they be spaced as close to 3-mi (4.8-km) intervals as possible. Crossings should be located at points approximately 1000 ft (305 m) beyond the end of each interchange speed change lane.

An example of a typical U-turn median opening is shown in Fig. 2.28, which indicates geometric features applicable to crossings located in medians of widths ranging from 40 to 84 ft (12 to 26 m). Turning radius should be modified proportionately for medians of varying widths. Tapers should be 200 ft (61 m) in length for all median widths. The profile grade line should normally be an extension of the cross slope of the shoulder paving, rounded at the lowest point.

2.3.6 Curbs

The type of curb and its location affect driver behavior patterns, which, in turn, affect the safety and utility of a road or street. Curbs, or curbs and gutters, are used mainly in urban areas. They should be used with caution where design speeds exceed 40 mi/h (64 km/h). Following are various reasons for justifying the use of curbs, or curbs and gutters:

- Where required for drainage
- Where needed for channelization, delineation, control of access, or other means of improving traffic flow and safety
- To control parking where applicable

Types of Curb. There are two general categories of curbs: barrier curbs and mountable curbs. Barrier curbs are relatively high [6 in (0.15 m) or more] and steep-faced. Mountable curbs are 6 in (0.15 m) or less in height and have flatter, sloping faces so that vehicles can cross them with varying degrees of ease. Figure 2.29 (Ref. 14) shows various curb designs that are commonly used on roadways. Types 1, 3, and 4 are examples of mountable curbs and are used for channelizing traffic, especially in islands and medians. Types 2 and 6 are barrier curbs used along pavement edges in urban areas and are designed to handle drainage more efficiently. Types 7 and 8 are tall barrier curbs designed to provide a more positive traffic barrier than the others. Type 7 is used as an alternate for guiderail in low-speed urban situations.

Position of Curb. Curbs are normally used at the edge of pavement on urban streets where the design speed is 40 mi/h (64 km/h) or less. Curbs at the edge of pavement have an effect on the lateral placement of moving vehicles. Drivers tend to shy away from them. Therefore, all curbs should be offset at least 1 ft (0.3 m) and preferably 2 ft (0.6 m) from the edge of the traffic lane. Where curb and gutter are used, the standard gutter width is 2 ft (0.6 m).

On roads where the design speed exceeds 40 mi/h (64 km/h), curbs should be used only in special cases. Special cases may include, but are not limited to, the use of curb to control surface drainage or to reduce right-of-way requirements in restricted areas.

www.EngineeringEBooksPdf.com

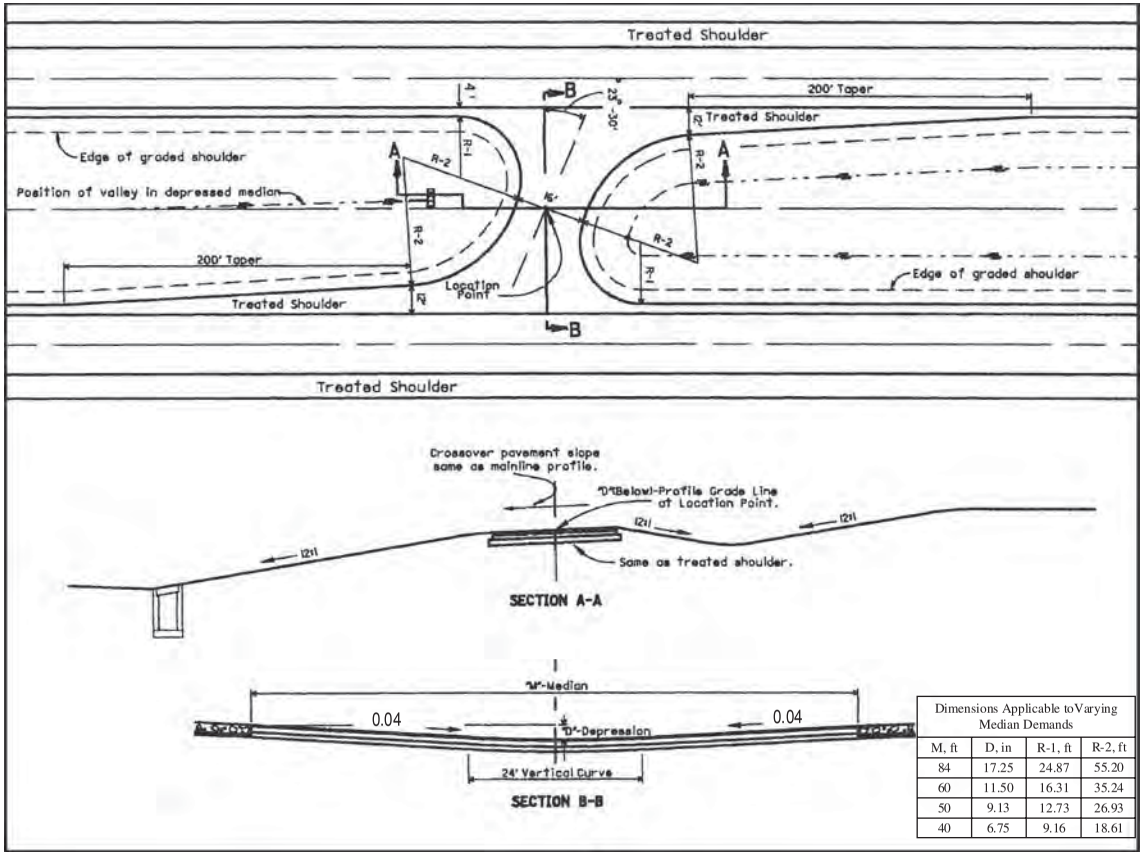

Dimensions Applicable toVarying Median Demands			
M, ft	D, in	R-1, ft	R-2, ft
84	17.25	24.87	55.20
60	11.50	16.31	35.24
50	9.13	12.73	26.93
40	6.75	9.16	18.61

FIGURE 2.28 Design for U-turn median opening. Conversion: 1 ft = 0.305 m. (*From* Location and Design Manual, *Vol. 1,* Roadway Design, *Ohio Department of Transportation, with permission*)

www.EngineeringEBooksPdf.com

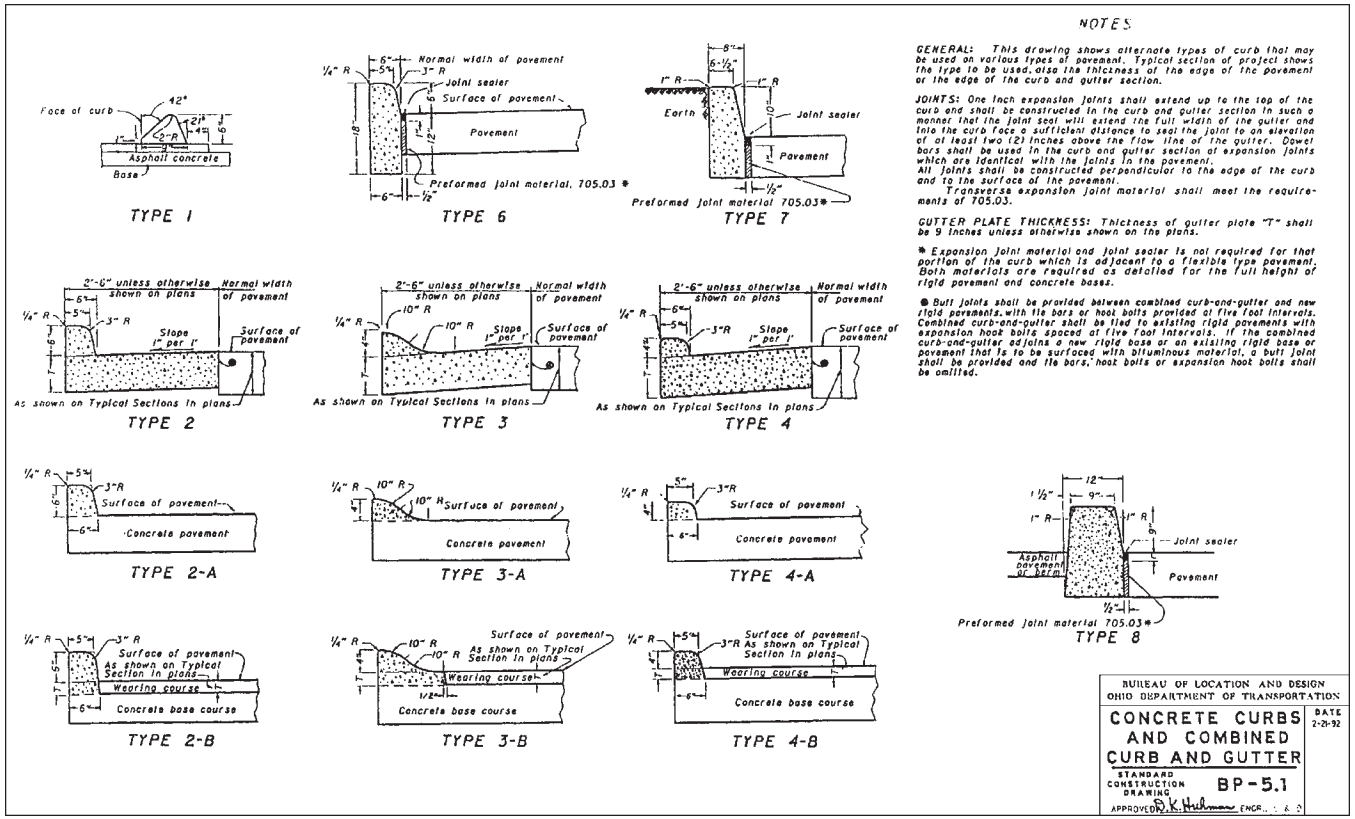

FIGURE 2.29 Examples of several designs for curbs. (Conversions: 1 ft = 0.305 m, 1 in = 0.0254 m). (*From* Standard Construction Drawings, *Bureau of Location and Design, Ohio Department of Transportation, with permission*)

www.EngineeringEBooksPdf.com

When it is necessary to use curbs on roads where the design speed is over 40 mi/h, they should not be closer to the traffic than 4 ft (1.2 m) or the edge of the treated shoulder, whichever is greater.

Curb/Guiderail Relationship. If curbs are used in conjunction with guiderail on roads having a design speed in excess of 40 mi/h (64 km/h), the face of curb should preferably be located either at or behind the face of guiderail. Under no conditions should the face of curb be located more than 9 in (0.23 m) in front of the face of rail. This restriction is necessary to prevent a vehicle from "vaulting" over the rail or striking it too high to be contained. Although guiderail is not normally used on curbed roadways having design speeds of 40 mi/h (64 km/h) or less, the same criteria used for higher-speed roadways should apply. Where this is not feasible or practical, the curb may be placed in front of the rail. Regardless of the design speed of the roadway or the placement of the curb, the face of guiderail should not be located closer than 4 ft (1.2 m) to the roadway.

Curb Transitions. Curb and raised median beginnings and endings should be tapered from the curb height to 0 in (0 m) in 10 ft (3 m). When an urban-type section with curbs at the edge of pavement changes to a rural-type section without curbs, the curb should be transitioned laterally at a 4:1 (longitudinal:lateral) rate to the outside edge of the treated shoulder, or 3 ft (0.9 m), whichever is greater. When a curbed side road intersects a mainline that is not curbed, the curb should be terminated no closer to the mainline edge of pavement than 8 ft (2.4 m) or the edge of the treated shoulder of the mainline, whichever is greater.

2.3.7 Pedestrian Facilities

When pedestrian facilities are to be constructed or reconstructed as part of project plans, the facilities should be designed to accommodate the disabled. Guidance in design of pedestrian facilities with access for the disabled is available (Ref. 11).

Walks. Walks should be provided in urban areas where pedestrian traffic currently exists or is planned in the future. Walks may be provided in rural areas where they will have sufficient use in relation to cost and safety. Walks are usually made of concrete, although asphalt or gravel may be used under special circumstances. Concrete walks are usually 4 in (100 mm) thick. At drive locations, the thickness is increased to 6 in (150 mm), or the drive thickness, whichever is greater. Asphalt or gravel walks are mostly used in parks, rest areas, etc., where there is low usage. Asphalt walks consist of 2 in (50 mm) of asphalt and 5 in (250 mm) aggregate base, while gravel walks are constructed of 4 in (100 mm) compacted aggregate base.

Walk Design. The normal width of walks is 4 ft (1.2 m) for residential areas and 6 ft (1.8 m) for commercial areas or major school routes. In downtown areas, the walk width normally extends from the curb to the right-of-way or building line. Transverse slopes should be $^1/_4$ in/ft (21 mm/m). The grade of the walk is normally parallel to the curb or pavement grade, but may be independent. The walk and the "tree lawn" (see next section) normally slope toward the pavement. Care should be taken in setting the pavement curb grade so that the sidewalk and the curb will not trap water or otherwise preclude usability of the adjoining property. The back edge of the walk should be located 2 ft (0.6 m) inside the right-of-way line, unless grading, utilities, or other considerations require a greater dimension.

www.EngineeringEBooksPdf.com

Tree Lawn. The tree lawn is defined as the area between the front of the curb and the front edge of the sidewalk. Grass is usually provided in the tree lawn, although in some urban areas the tree lawn is paved. As shown in Fig. 2.30, in most cases, the desirable tree lawn width is 8 ft (2.4 m) or more. The 8-ft (2.4 m) width provides an area for snow storage and for traffic signs, and an adequate distance for elevation changes at drives. Tree lawn widths of less than 5 ft (1.5 m) result in locating of signposts close to pedestrians using the walk, and steep grades on drive profiles. The minimum tree lawn width is 2 ft (0.6 m).

Border Area. In an urban area where a walk is not provided, the area between the face of curb and the right-of-way line is often referred to as a *border.* As indicated in Fig. 2.30*d*, the border width in residential areas should be at least 8 ft (2.4 m) and preferably 14 ft (4.3 m). In commercial areas, the minimum border width is 10 ft (3.0 m), while a 16-ft (4.9-m) width is preferable.

Walks on Bridges. Walks should be provided on bridges located in urban or suburban areas having curbed sections under two conditions: (1) where there are existing walks on the bridge and/or bridge approaches, or (2) where evidence can be shown through local planning processes, or similar justification, that walks will be required in the near future (5 to 10 years). Anticipated pedestrian volumes of 50 per day justify a walk on one side, and 100 per day justify walks on both sides. Walks on bridges should preferably be 6 ft (1.8 m) wide in residential areas and 8 ft (2.4 m) wide in commercial areas measured from the face of curb to face of parapet. Widths, however, may be as much as 12 ft (3.7 m) in downtown areas. The minimum bridge walk width is 5 ft (1.5 m).

Walks under Bridges. The criterion for providing walks at underpasses is basically the same as described above for walks on bridges. An exception is that in areas where there are no approach walks, space will be provided for future walks but walks will not be constructed with the project unless there is substantial concurrent approach walk construction. Where the approach walks at underpasses include a tree lawn, the tree lawn width may be carried through the underpass wherever space permits.

Curb Ramps. A curb ramp is a portion of the walk that is modified to provide a gradual elevation transition through the face of the adjoining curb. It is designed to provide safe and convenient curb crossings for the disabled in wheelchairs, but it can also be used by others. Examples include wheeled vehicles maneuvered by pedestrians and bikeway traffic, when such use is permitted. Curb ramps should be provided where curb and walks are being constructed at intersections and other major points of pedestrian curb crossing such as mid-block crosswalks. When a curb ramp is built on one side of a street, a companion curb ramp is required on the opposite side of the street. The basic requirement is that a crosswalk must be accessible via curb ramps at both ends, not one end only. In most cases, curb ramps will be installed in all quadrants of an intersection. Curb ramps should be located within crosswalk markings to permit legal street crossings. The ramp location must be coordinated with drainage structures, utility poles, etc. The normal gutter profile should be continued through the ramp area, except the profile may be altered to avoid a location conflict between the ramp and a drainage structure. Drainage structures should not be located in the ramp or in front of the ramp. Catch basins should be placed upstream from the ramp.

www.EngineeringEBooksPdf.com

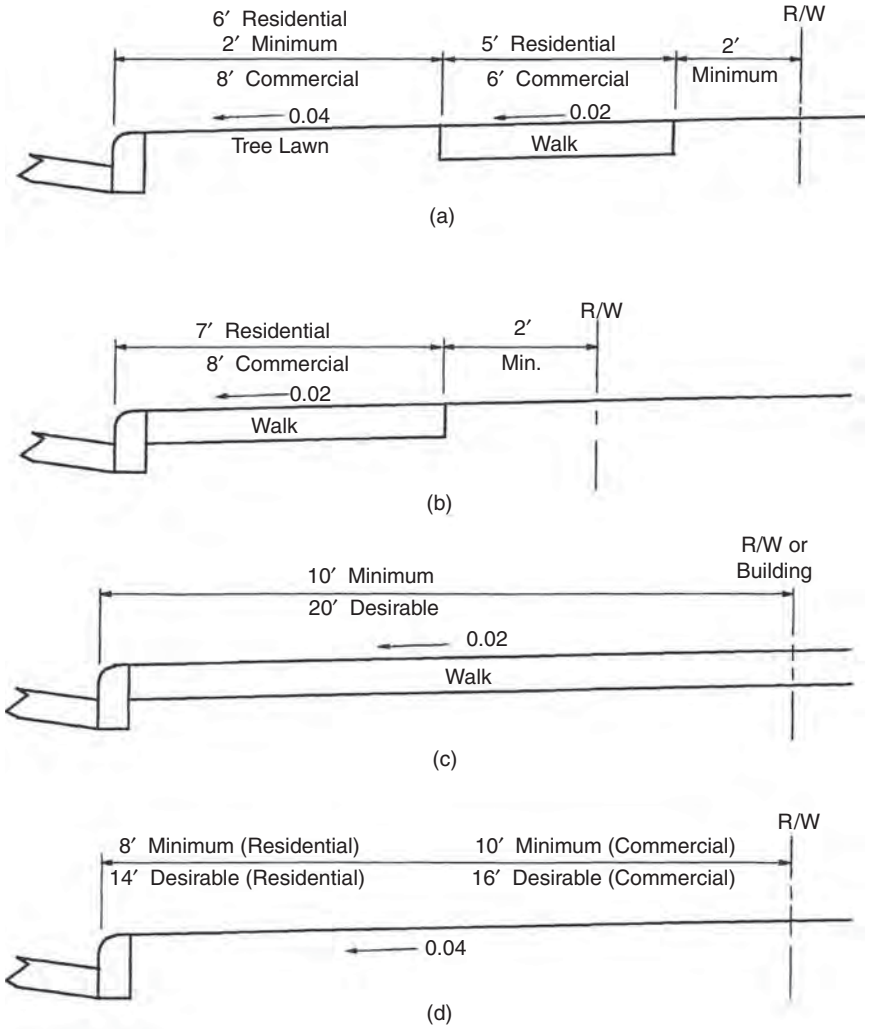

FIGURE 2.30 Examples of walk designs. (*a*) Walk with tree lawn. (*b*) Walk with no tree lawn. (*c*) Walk in downtown area. (*d*) Border area with no walk. Conversion: 1 ft = 0.305 m. (*From* Location and Design Manual, *Vol. 1,* Roadway Design, *Ohio Department of Transportation, with permission*)

2.4 INTERSECTION DESIGN

An intersection is defined as an area where two or more roadways join or cross. Each roadway extending from the intersection is referred to as a *leg*. The intersection of two roadways has four legs. When one roadway ends at the intersection with another roadway, a three-leg intersection, or T intersection, is formed. Some intersections have more than four legs, but this design should be avoided, since the operation of traffic movements

www.EngineeringEBooksPdf.com

is usually inefficient. There are three general types of intersections: (1) at-grade, where two or more roadways cross in the same vertical plane, (2) grade-separated, where one roadway is bridged over or tunneled under the other roadway but no turning movements are allowed, and (3) interchanges, a special type of grade-separated intersection where turning movements are accommodated by ramps connecting the two roadways.

2.4.1 At-Grade Intersections

At-grade intersections should be designed to promote the safe movement of traffic on all legs with a minimal amount of delay to drivers using the intersection. The amount of delay a driver experiences is the measure of effectiveness for signalized intersections as used in capacity analysis. Factors to be considered in designing an intersection are:

- Traffic volumes on all legs, including separate counts for turning vehicles
- Sight distance
- Traffic control devices
- Horizontal alignment
- Vertical alignment
- Radius returns
- Drainage design
- Islands
- Left turn lanes
- Right turn lanes
- Additional through lanes
- Recovery areas
- Pedestrians
- Bicycles
- Lighting
- Development of adjacent property

Traffic Volumes. No intersection can be properly designed without first obtaining accurate traffic counts and reliable projections for the design year of the project. Traffic counts are best determined from actual field counts, including all turning movements, and are broken down by vehicle type. Vehicle types are divided into two groups. The first group includes passenger cars and type A commercial vehicles (pickup trucks and light delivery trucks not using dual tires). The second group includes type B commercial vehicles (tractor, semitrailer, truck-trailer combinations) and type C commercial vehicles (buses, dual-tired trucks with single or tandem rear axles). Adjustments are made to field counts to allow for day of the week, month of the year, time of day, and other site-related factors that may have a significant effect on the counts. Most urbanized areas have regional planning agencies that either provide or certify the traffic data used in intersection design.

Traffic Control. There are four basic types of traffic control at at-grade intersections:

- Cautionary, or nonstop, control
- Stop control for minor traffic

www.EngineeringEBooksPdf.com

- Four-way stop control
- Signal control

In discussing at-grade intersections, the terms *major roadway* and *minor roadway* are sometimes used to distinguish between the two roads. The major roadway usually has a higher functional classification and a greater volume of traffic.

Cautionary, or nonstop, control is used only in special circumstances, such as at an entrance terminal on a freeway. Stop control for the minor roadway is one of the most common treatments found in practice. In these cases, the traffic volumes on the minor roadway are light enough that a signal is not required. The major roadway apparently has volumes low enough to allow gaps for the minor road traffic to enter or cross the intersection. Four-way stop control is effective in situations where the roadways have nearly equal traffic volumes but not great enough volume to justify installing a signal. Finally, signal control is used for intersections where volumes are large enough to preclude using one of the other types.

Sight Distance. Adequate sight distance is an important consideration when designing an at-grade intersection. The alignment and grade on the major roadway should, as a minimum, provide stopping sight distance as given in Table 2.2. The criteria for intersection sight distance (Table 2.3) should also be met wherever possible. Figure 2.7 illustrates the lines of sight involved in intersection design.

Horizontal Alignment Considerations. It is best to avoid locating an intersection on a curve. Since this is often impossible, it is recommended that intersection sites be selected where the curve superelevation is ½ in/ft (22 mm/m) or less. It is also recommended that intersections be located where the grade on the major roadway is 6 percent or less, with 3 percent the desirable maximum. Intersection angles of 70° to 90° are provided on new or relocated roadways. An angle of 60° may be satisfactory if right-of-way is to be purchased for a future grade separation and the smaller angle will avoid reconstruction of the intersecting road. In such cases, it may be desirable to locate the intersection so the separation structure can be constructed in the future without disrupting the intersection operation.

Relocation of the minor road is often required to meet the desired intersection location, to avoid roadway segments with undesirable vertical alignments, and to adjust intersection angles. Horizontal curves on the minor roads should be designed to meet the design speed of the road. The minor road alignment should be as straight as possible. Figure 2.31 shows the alignment for a typical rural crossroad relocation.

Vertical Alignment Considerations. On roadways with stop control at the intersection, the portion of the intersection located within 60 ft (18 m) of the edge of the mainline pavement is considered to be the *intersection area.* The pavement surface within this intersection area should be visible to the driver within the limits of the minimum stopping sight distance listed in Table 2.2. By being able to see the pavement surface (height of object of zero), the driver (height of eye of 3.5 ft or 1.07 m) can observe the radius returns and pavement markings and recognize an approaching intersection. Figure 2.32 shows acceptable practice for design of the intersection area.

Combinations of pavement cross slopes and profile grades may produce unacceptable edge of pavement profiles in the intersection area. For this reason, edge of pavement profiles should be plotted and graphically graded to provide a smooth profile. Profile

www.EngineeringEBooksPdf.com

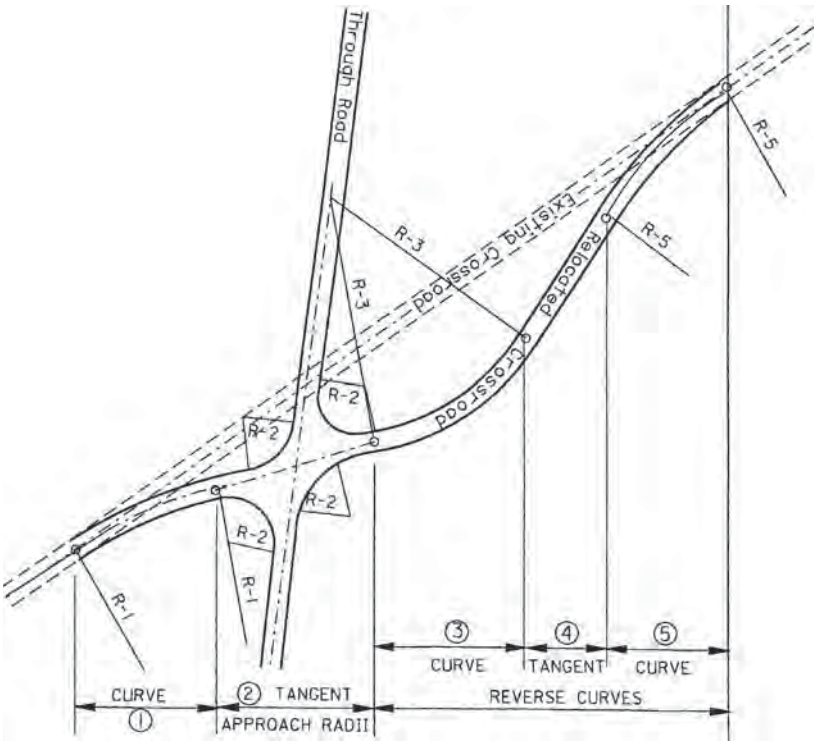

Note 1. Curve—This portion of the crossroad can occur by itself at "T" type or three-legged intersections. If possible, the radius of this curve should be commensurate with the design speed of the crossroad. Often, the length of the required profile controls the work length. The horizontal curvature is then chosen so it can be accomplished within this work length. Regardless of the length of the profile adjustment, it is desirable to provide at least a 230-ft (70-m) radius for this curve. When a 230-ft (70-m) radius incurs high costs, it is permissible to reduce this radius to a minimum of 150 ft (46 m).

Note 2. Tangent and Approach Radii—The crossroad in this area should have a tangent alignment. For the condition shown, the alignment between the radius returns is tangent from one side of the road to the other. However, at some intersections with a minor through movement (for example, crossroad intersections of standard diamond ramps) it may be desirable to provide different intersection angles on each side of the through road.

Note 3. Curve—The statements in (1) above also apply to this curve. With the reverse curve condition shown, the radius will often not exceed 250 ft (76 m) because flatter curves make the relocation extraordinarily long.

Note 4. Tangent—This tangent should be approximately 150 ft (46 m) in length for 30 or 40 mi/h (48 or 64 km/h) design speeds on the existing road, and approximately 250 ft (76 m) for 50 or 60 mi/h (80 or 97 km/h) design speeds. These lengths are generous enough to allow reasonable superelevation transitions between the reverse curves. In general, it is usually not desirable to make this tangent any longer than required. If a longer tangent can be used, the curvature or intersection angle can be improved and these two design items are more important.

Note 5. Curve—This curve should be much flatter than the other two curves. It should be capable of being driven at the normal design speed of the existing crossroad.

FIGURE 2.31 Typical rural crossroad relocation. (*From* Location and Design Manual, *Vol. 1,* Roadway Design, *Ohio Department of Transportation, with permission*)

www.EngineeringEBooksPdf.com

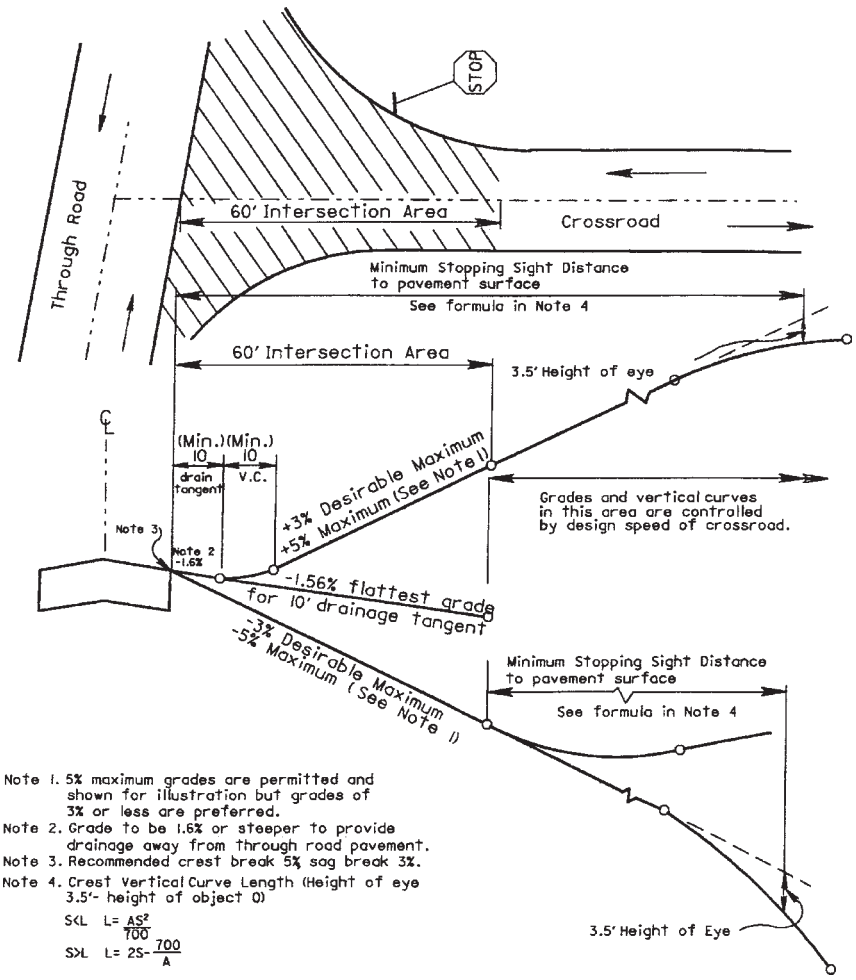

FIGURE 2.32 Crossroad profile for stop condition where through road has normal crown. Conversion: 1 ft = 0.305 m. (*From* Location and Design Manual, *Vol. 1,* Roadway Design, *Ohio Department of Transportation, with permission*)

grades within the intersection area for stop conditions are shown in Figs. 2.32 and 2.33. The grade outside the intersection area is controlled by the design speed of the crossroad. Normal design practices can be used outside the intersection area with the only restriction on the profile being the sight distance required as discussed above.

Grade breaks are permitted at the edge of the mainline pavement for a stop condition. If these grade breaks exceed the limits given in note 3 of Fig. 2.32, they should be treated according to note 3 of Fig. 2.33. Several examples are shown in Fig. 2.33 of the use of grade breaks or short vertical curves adjacent to the edge of through pavement.

Signalized intersections require a more sophisticated crossroad profile. Whenever possible, roadway profiles through the intersection area of a signalized intersection should be designed to meet the design speed of the roads. Grade breaks at signalized

www.EngineeringEBooksPdf.com

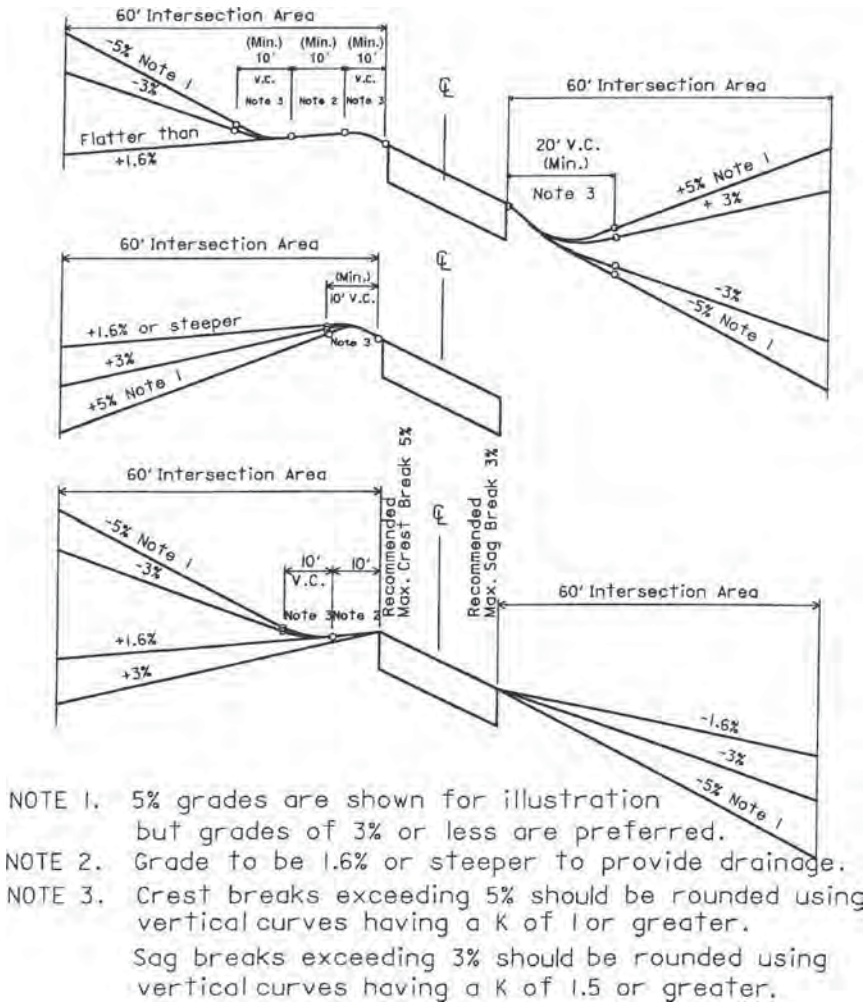

NOTE 1. 5% grades are shown for illustration but grades of 3% or less are preferred.
NOTE 2. Grade to be 1.6% or steeper to provide drainage.
NOTE 3. Crest breaks exceeding 5% should be rounded using vertical curves having a K of 1 or greater.
Sag breaks exceeding 3% should be rounded using vertical curves having a K of 1.5 or greater.

FIGURE 2.33 Crossroad profiles for stop condition where through road is superelevated. Conversion: 1 ft = 0.305 m. (*From* Location and Design Manual, *Vol. 1,* Roadway Design, *Ohio Department of Transportation, with permission*)

intersections should be in accordance with Table 2.17. Since the grade break across a normal crowned pavement is usually 3.12 percent, it should be noted that the crown must be flattened. This will allow vehicles on the crossroad to pass through the intersection on a green signal safely without significantly adjusting their speed. The sight distance requirements within the intersection area that were discussed for stop-controlled roadways are also applicable for signalized intersections. Figure 2.34 shows examples of crossroad profiles through a signalized intersection.

Radius Returns at Intersections. Intersection radii in rural areas should normally be 50 ft (15 m), except lesser, but no less than 35 ft (11 m), radii may be used at minor

www.EngineeringEBooksPdf.com

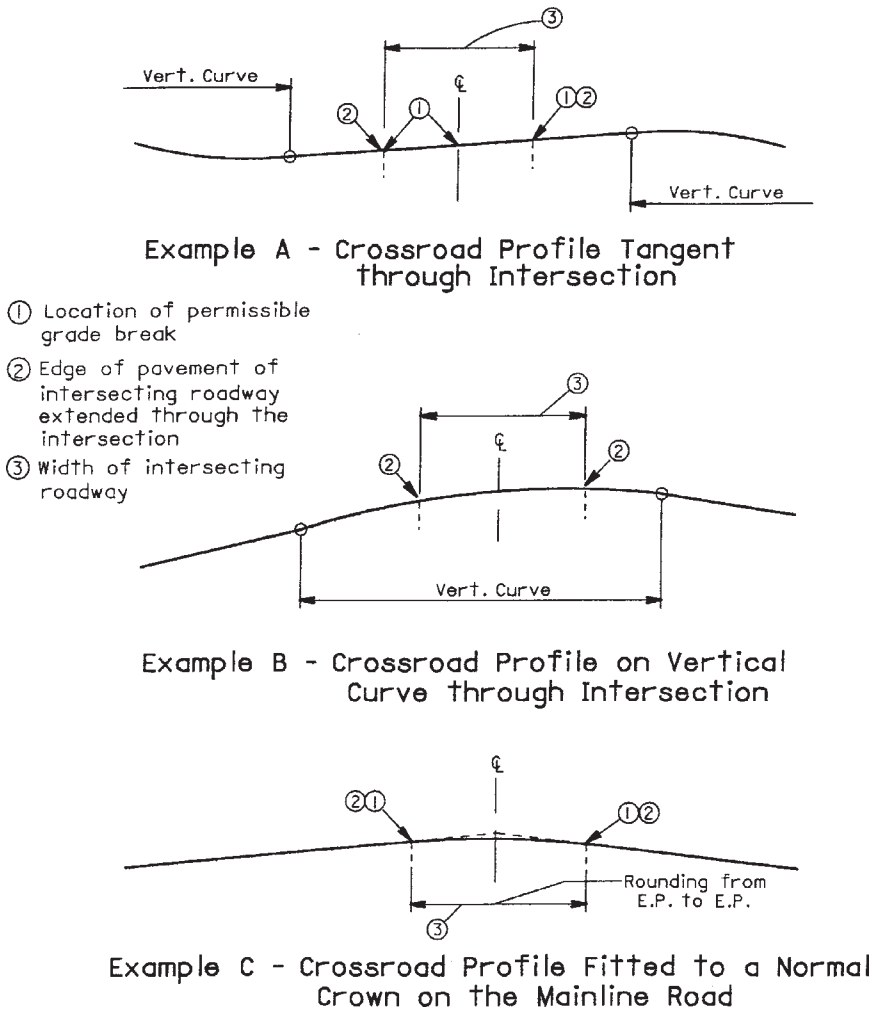

FIGURE 2.34 Examples of crossroad profiles through signalized intersection. (*From* Location and Design Manual, *Vol. 1,* Roadway Design, *Ohio Department of Transportation, with permission*)

intersecting roads if judged appropriate for the volume and character of turning vehicles. Radii larger than 50 ft (15 m), a radius with a taper, or a three-center curve should be used at any intersection where the design must routinely accommodate semitrailer truck turning movements. Truck turning templates should be used to determine proper radii and stop bar location. Figure 2.35 shows an example of a turning template for a WB-50 semitrailer truck. Complete sets of turning templates may be obtained from the Institute of Traffic Engineers (Ref. 12). Also available for use with CAD drawings is a CAD-based software product called *AutoTURN* which is available from Transoft Solutions (Ref. 16). When used in applications with CAD drawings, it reproduces the turning paths for a wide variety of design vehicles. When truck turning

www.EngineeringEBooksPdf.com

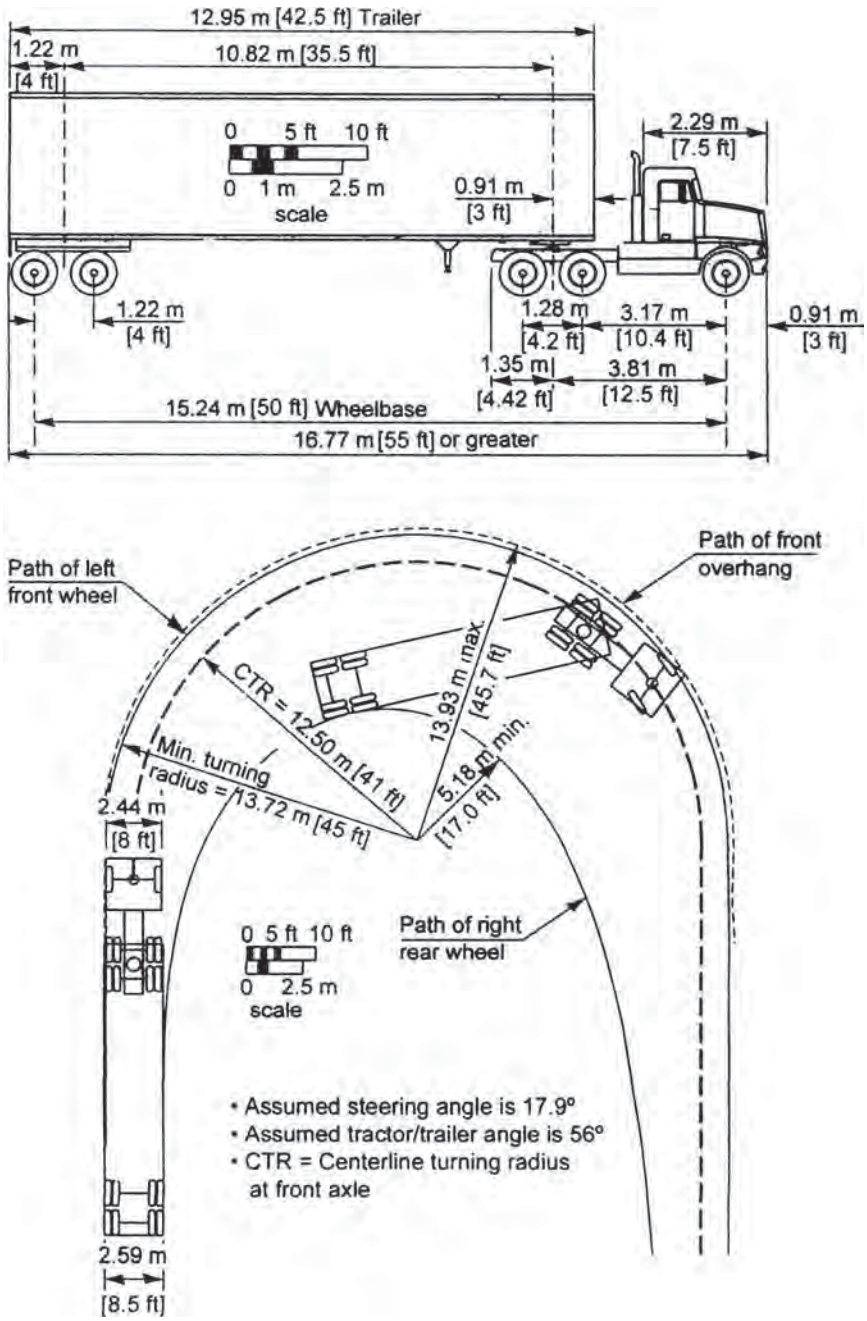

FIGURE 2.35 Template of minimum turning path for WB-50 semitrailer truck. Conversion: 1 ft = 0.305 m. (*From* A Policy on Geometric Design of Highways and Streets, *American Association of State Highway and Transportation Officials, 2004, with permission*)

www.EngineeringEBooksPdf.com

templates are used, a 2-ft (0.6-m) clearance should be provided between the edge of pavement and the closest tire path.

Corner radii at street intersections in urban areas should consider the right-of-way available, the intersection angle, pedestrian traffic, approach width, and number of lanes. The following should be used as a guide:

- Radii of 15 to 25 ft (4.6 to 7.6 m) are adequate for passenger vehicles and may be provided at minor cross streets where there are few trucks or at major intersections where there are parking lanes.
- Radii of 25 ft (7.6 m) or more should be provided at minor intersections on new or reconstruction projects where space permits.
- Radii of 30 ft (9.1 m) or more should be used where feasible at major cross street intersections.
- Radii of 40 ft (12.2 m) or more, three-centered compound curves, or simple curves with tapers to fit truck paths should be provided at intersections used frequently by buses or large trucks.

Drainage Considerations. Within the intersection area, the profile of the crossroad should be sloped wherever possible so the drainage from the crossroad will not flow across the through road pavement. For a stop condition, the 10 ft (3.0 m) of crossroad profile adjacent to the through pavement is normally sloped away from the through pavement, using at least a 1.56 percent grade, as shown in Fig. 2.32. The profiles of curbed radius returns within the intersection may be adjusted to accommodate location of catch basins. It is recommended that exaggerated profiles be used to make adjustments. To ensure smooth transitions around the returns, plot the pavement edges for at least 25 ft (7.6 m) going away from the returns for each leg of the intersection.

Islands at Intersections. In intersection design, an *island* is defined as an area between traffic lanes that has been delineated to control traffic movements through the intersection. An island may be curbed or uncurbed. It may be concrete, grass, or the same material as the traffic lanes. Islands may be used at intersections for the following reasons:

- Separation of conflicts
- Control of angle of conflict
- Reduction in excessive pavement areas
- Favoring a predominant movement
- Pedestrian protection
- Protection and storage of vehicles
- Location of traffic control devices

Although certain situations require the use of islands, they should be used sparingly and avoided wherever possible. Curbed islands are most often used in urban areas where traffic is moving at relatively low speeds, 40 mi/h (64 km/h) or less, and fixed-source lighting is available. Curbed islands with an area smaller than 50 ft^2 (4.6 m^2) in urban locations and 75 ft^2 (7.0 m^2) in rural areas should generally not be used. An area of 100 ft^2 (9.3 m^2) is preferred in either case. Where pedestrian traffic will be using curbed islands, the islands must be provided with curb ramps. Islands delineated by pavement markings are often preferred in rural or lightly developed areas, when approach speeds are relatively high, where there is little pedestrian traffic, where fixed-source lighting is not

www.EngineeringEBooksPdf.com

provided, or where traffic control devices are not located within the island. Nonpaved islands are normally used in rural areas. They are generally turf and are depressed for drainage purposes.

Left Turn Lanes. Probably the single item having the most influence on intersection operation is the treatment of left-turning vehicles. Left turn lanes are generally desirable at most intersections. However, cost and space requirements do not permit their inclusion in all situations. Intersection capacity analysis procedures should be used to determine the number and use of all lanes. Left turn lanes are generally required under two conditions: (1) when left turn design volumes exceed 20 percent of total directional approach design volumes, and (2) when left turn design volumes exceed 100 vehicles per hour in peak periods.

Opposing left turn lanes should be aligned opposite each other because of sight distance limitations. They are developed in several ways depending on the available width between opposing through lanes. Figure 2.36*a* shows the development required when additional width must be generated. The additional width is normally accomplished by widening on both sides. However, it could be done all on one side or the other. In Fig. 2.36*b*, the median width is sufficient to permit the development of the left turn lane. Figure 2.37 shows the condition where an offset left turn lane is required to obtain adequate sight distance in wide medians.

In developing turn lanes, several types of tapers may be involved as shown in Fig. 2.36:

Approach taper. An approach taper directs through traffic to the right. Approach taper lengths are calculated using Eq. (2.5) or (2.6).

Departure taper. The departure taper directs through traffic to the left. Its length should not be less than that calculated using the approach taper equations. Normally, however, the departure taper begins opposite the beginning of the full-width turn lane and continues to a point opposite the beginning of the approach taper.

Diverging taper. The diverging taper is the taper used at the beginning of the turn lane. The recommended length of a diverging taper is 50 ft (15 m).

Tables 2.26 and 2.27 have been included to aid in determining the required lengths of left turn lanes at intersections. After determining the length of a left turn lane (Table 2.26), the designer should also check the length of storage available in the adjacent through lane(s) to ensure that access to the turn lane is not blocked by a backup in the through lane(s). To do this, Table 2.27 may be entered using the average number of through vehicles per cycle, and the required length read directly from the table. If two or more lanes are provided for the through movement, the length obtained should be divided by the number of through lanes to determine the required storage length.

It is recommended that left turn lanes be at least 100 ft (30 m) long, and the maximum length be no more than 600 ft (183 m). The width of a left turn lane should desirably be the same as the normal lane widths for the facility. A minimum width of 11 ft (3.4 m) may be used in moderate- and high-speed areas, while 10 ft (3.0 m) may be provided in low-speed areas. Additional width should be provided whenever the lane is adjacent to a curbed median as discussed previously under "Position of Curb."

Double Left Turn Lanes. Double left turn lanes should be considered at any signalized intersection with left turn demands of 300 vehicles per hour or more. The actual need should be determined by performing a signalized intersection capacity analysis. Fully protected signal phasing is required for double left turns. When the signal phasing permits

www.EngineeringEBooksPdf.com

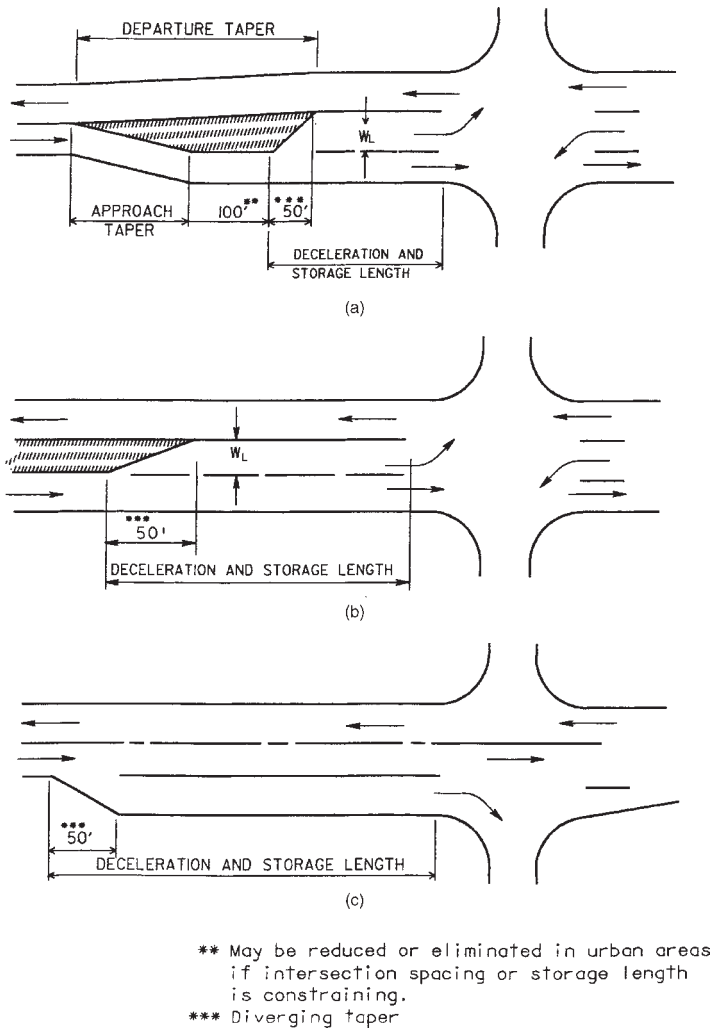

FIGURE 2.36 Turning lane designs showing roadway taper. (*a*) Left turn lane with no median or median width less than W_L. (*b*) Left turn lane with median wider than W_L. (*c*) Right turn lane. Conversions: 50 ft = 15 m, 100 ft = 30 m. (*From* Location and Design Manual, *Vol. 1,* Roadway Design, *Ohio Department of Transportation, with permission*)

simultaneous left turns from opposing approaches, it may be necessary to laterally offset the double left turn lanes on one approach from the left turn lane(s) on the opposing approach to avoid conflicts in turning paths. Figure 2.38 provides an example. All turning paths of double left turn lanes should be checked with truck turning templates allowing 2 ft (0.6 m) between the tire path and edge of each lane. Expanded throat widths are necessary for double left turn lanes as illustrated in Fig. 2.39.

www.EngineeringEBooksPdf.com

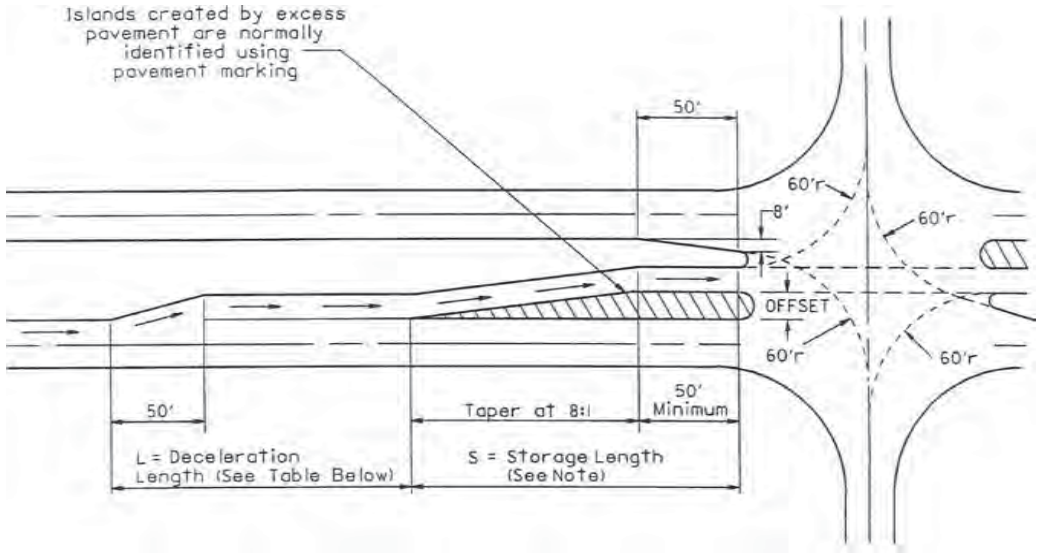

Design Speed (mi/h)	L (ft)
40	125
45	175
50	225
55	285
60	345

NOTE

1. Determine a minimum length for S by multiplying 8 times the lateral offset and adding 50 ft. Using the design turning volume, obtain the required storage length from Table 2.26. Use the greater of these two numbers for L_2. If the length from Table 2.26 is the greater value, increase the tangent area at the intersection.

FIGURE 2.37 Offset left turn lane for sight distance at wide median. Conversions: 1 mi/h = 1.609 km/h, 1 ft = 0.305 m. (*From* Location and Design Manual, *Vol. 1,* Roadway Design, *Ohio Department of Transportation, with permission*)

www.EngineeringEBooksPdf.com

TABLE 2.26 Determination of Length of Left Turn Lanes

Type of traffic control	Turn demand volume for design speed, mi/h					
	30–35		40–45		50–60	
	High	Low*	High	Low*	High	Low*
Signalized	A	A	B or C†	B or C†	B or C†	B or C†
Unsignalized stopped crossroad	A	A	A	A	A	A
Unsignalized through road	A	A	C	B	B or C†	B

Conversions: 1 mi/h = 1.609 km/h, 1 ft = 0.305 m.

Condition A: storage only:

Length = 50 ft (diverging taper) + storage length

Condition B: high-speed deceleration only:

Design speed, mi/h	Length (including 50-ft diverging taper), ft
40	125
45	175
50	225
55	285
60	345

Condition C: moderate-speed deceleration and storage:

Design speed, mi/h	Length (including 50-ft diverging taper), ft
40	111
45	125
50	143
55	164
60	181

+ storage length

*Low is considered 10% or less of approach traffic volume.

†Whichever is greater.

Source: *Location and Design Manual,* Vol. 1, *Roadway Design,* Ohio Department of Transportation, with permission.

Right Turn Lanes. Exclusive right turn lanes are less critical in terms of safety than left turn lanes. However, right turn lanes can significantly improve the level of service of signalized intersections. They also provide a means of safe deceleration for right-turning traffic on high-speed facilities and separate right-turning traffic from the rest of the traffic stream at stop-controlled or signalized intersections. As a general guideline, an exclusive right turn lane should be considered when the right turn volume exceeds 300 vehicles per hour per lane.

Figure 2.36*c* shows the design of right turn lanes. Table 2.27 may be used in preliminary design to estimate the storage required at signalized intersections. The recommended maximum length of right turn lanes at signalized intersections is 800 ft (244 m), with 100 ft (30 m) the minimum length.

The blockage of the right turn lane by the through vehicles should also be checked using Table 2.27. With right-turn-on-red operation, it is imperative that access to the right turn lane be provided to achieve full utilization of the benefits of this type of operation.

The width of right turn lanes should desirably be equal to the normal through lane width for the facility. In low-speed areas, a minimum width of 10 ft (3.0 m) may be provided. Additional lane width should be provided when the right turn lane is adjacent to a curb.

www.EngineeringEBooksPdf.com

TABLE 2.27 Storage Length at Intersections

Average no. of vehicles per cycle*	Required length, ft	Required length, m	Average no. of vehicles per cycle*	Required length, ft	Required length, m
1	50	15	17	600	183
2	100	30	18	625	190
3	150	46	19	650	198
4	175	53	20	675	206
5	200	61	21	725	221
6	250	76	22	750	229
7	275	84	23	775	236
8	325	99	24	800	244
9	350	107	25	825	251
10	375	114	30	975	297
11	400	122	35	1125	343
12	450	137	40	1250	381
13	475	145	45	1400	427
14	500	152	50	1550	472
15	525	160	55	1700	518
16	550	168	60	1850	564

*Average vehicles/cycle = [DHV (turning lane)]/(cycles/hour)

If cycles/hour are unknown, assume:

Unsignalized or 2-phase—60 cycles per hour

3-phase—40 cycles per hour

4-phase—30 cycles per hour

Source: *Location and Design Manual,* Vol. 1, *Roadway Design,* Ohio Department of Transportation, with permission.

Double Right Turn Lanes. Double right turn lanes are rarely used. When they are justified, it is generally at an intersection involving either an off-ramp or a one-way street. Double right turn lanes require a larger intersection radius [usually 75 ft (23 m) or more] and a throat width comparable to a double left turn (Fig. 2.39).

Additional Through Lanes. Normally, the number of through lanes at an intersection is consistent with the number of lanes on the basic facility. Occasionally, through lanes are added on the approach to enhance signal design. As a general suggestion, enough main roadway lanes should be provided that the total through plus turn volume does not exceed 450 vehicles per hour per lane.

Recovery Area at Curbed Intersections. When a through lane becomes a right-turn-only lane at a curbed intersection, an opposite-side tapered recovery area should be considered. The taper should be long enough to allow a trapped vehicle to escape, but not so long as to appear like a merging lane. Taper lengths may vary from 200 to 250 ft (61 to 76 m) depending on design speed.

Pedestrians. Whenever sidewalks approach a curbed intersection, curb ramps must be provided, lining up with the crosswalks. At signalized intersections, when pedestrians are moving concurrently with traffic on one of the phases, sufficient time must be provided on the phase to allow pedestrians to cross the intersection. This is especially significant on intersections with large radii or multiple through lanes. There may be situations where pedestrian volumes will require a separate phase of the signal to be dedicated to their passage.

www.EngineeringEBooksPdf.com

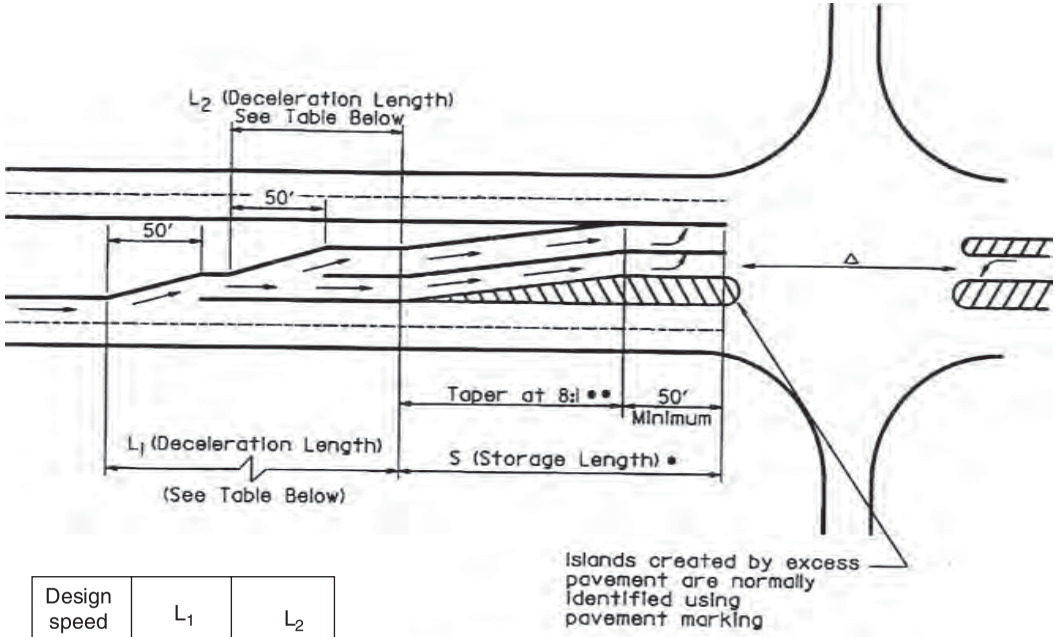

Design speed	L_1	L_2
40 mi/h	125′	75′
45 mi/h	175′	125′
50 mi/h	225′	145′
55 mi/h	285′	164′
60 mi/h	345′	181′

• Use Table 2.27 to determine storage length. For offset left turn lanes, minimum storage length equals 8 x offset + 50′.

•• Taper is used when dual left turn lanes are offset.

△ If opposite approach has one left turn lane, these lanes should line up.

FIGURE 2.38 Layout for double left turn lanes with lateral offsets. Conversions: 1 mi/h = 1.609 km/h, 1 ft = 0.305 m. (*From* Location and Design Manual, *Vol. 1,* Roadway Design, *Ohio Department of Transportation, with permission*)

www.EngineeringEBooksPdf.com

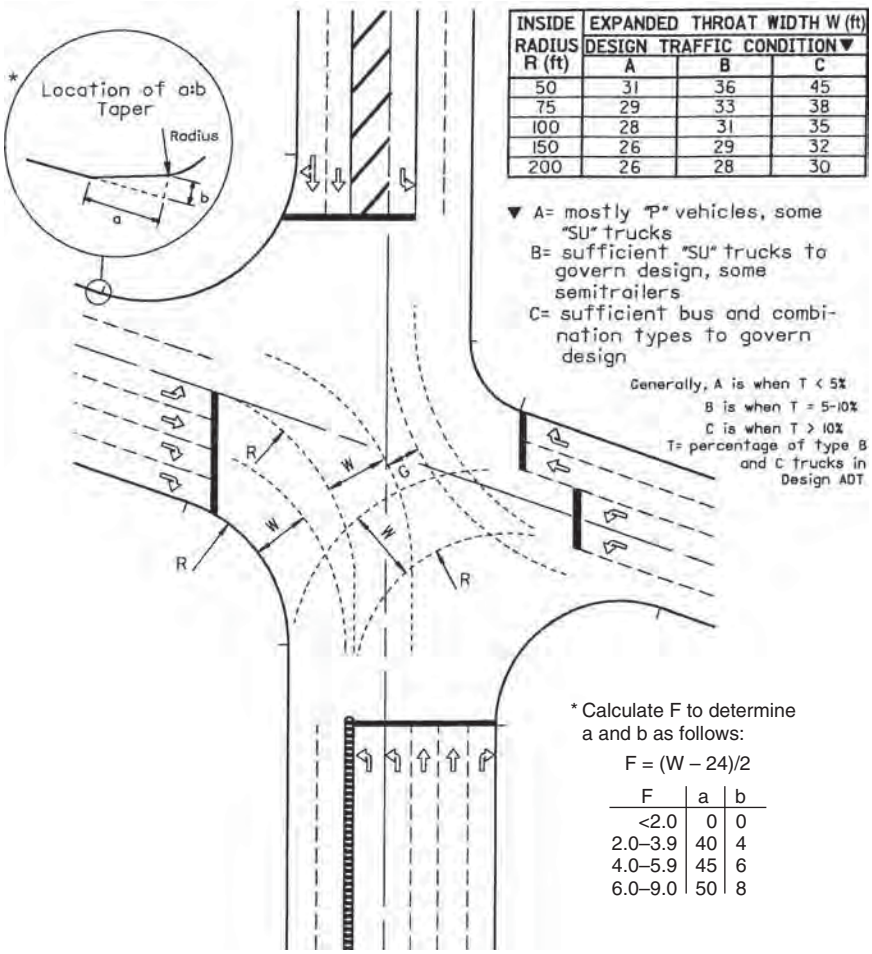

INSIDE RADIUS R (ft)	EXPANDED THROAT WIDTH W (ft) DESIGN TRAFFIC CONDITION▼		
	A	B	C
50	31	36	45
75	29	33	38
100	28	31	35
150	26	29	32
200	26	28	30

F	a	b
<2.0	0	0
2.0–3.9	40	4
4.0–5.9	45	6
6.0–9.0	50	8

FIGURE 2.39 Layout for double left turn lanes showing expanded throat width required. Conversion: 1 ft = 0.305 m. (*From* Location and Design Manual, *Vol. 1,* Roadway Design, *Ohio Department of Transportation, with permission*)

Other Considerations. On designated bikeway routes, bicycles may have their own lane approaching the intersection. This will require special handling in cases where right-turning vehicles may be crossing the path of through bicycle traffic. The designer should consult with a bicycle facility design reference before proceeding with the intersection design.

Providing fixed-source lighting at intersections, especially in urban areas, is always a safety benefit to drivers. It is particularly important for large-area intersections and channelized intersections, since turning paths may be difficult to determine at night.

The development of adjacent property can sometimes have a detrimental effect on intersection design, since driveways accessing the development may be located too close to the intersection. Whenever possible, accesses to adjacent properties should be located far enough from the intersection so as not to interfere with turn lane design.

www.EngineeringEBooksPdf.com

2.4.2 Two-Way Left Turn Lanes

A two-way left turn lane may be considered a special type of "intersection" design, since its purpose is to provide a separate lane for traffic in both opposing lanes to slow down and turn out of the traffic stream in front of opposing traffic. Rather than concentrate the left turners at a single crossroad intersection, the two-way left turn lane spreads out the turning movements over a continuous stretch of roadway. Mid-block left turns are often a serious problem in urban and suburban areas. They can be a safety problem due to angle accidents with opposing traffic as well as rear-end accidents with traffic in the same direction. Mid-block left turns also restrict capacity. Two-way left turn lanes (TWLTLs) have proven to be a safe and cost-effective solution to this problem. TWLTLs should be considered whenever actual or potential mid-block conflicts occur. This is particularly true when accident data indicate a history of mid-block left turn–related accidents. Closely spaced driveways, strip commercial development, and multiple-unit residential land use along the corridor are other indicators of the possible need for a TWLTL. Some guidelines that may be used to justify the use of TWLTLs are listed below:

- 10,000 to 20,000 vehicles per day for four-lane highways
- 5000 to 12,000 vehicles per day for two-lane highways
- 70 mid-block turns per 1000 ft (305 m) during peak hour
- Left turn peak hour volume 20 percent or more of total volume
- Minimum reasonable length of 1000 ft (305 m) or two blocks

Widths for TWLTLs are preferably the same as through lane widths. Lane widths may be reduced to as little as 10 ft (3.0 m) in restricted areas. Care should be taken not to make a TWLTL wider than 14 ft (4.3 m), since this may encourage shared side-by-side use of the lane.

2.4.3 Interchanges

An *interchange* is defined as a system of interconnecting roadways in conjunction with one or more grade separations that provides for the movement of traffic between two or more roadways or highways on different levels. Interchanges are utilized on freeways and expressways, where access control is important. They are used on other types of facilities only where crossing and turning traffic cannot be accommodated by a normal at-grade intersection.

Interchange Spacing. Interchanges should be located close enough together to properly discharge and receive traffic from other highways or streets, and far enough apart to permit the free flow and safety of traffic on the main facility. In general, more frequent interchange spacing is permitted in urbanized areas. Minimum spacing is determined by weaving requirements, ability to sign, lengths of speed change lanes, and capacity of the main facility. Interchanges within urban areas should be spaced not closer than an average of 2 mi (3.2 km), in suburban sections an average of not closer than 4 mi (6.4 km), and in rural sections an average of not closer than 8 mi (12.9 km). In consideration of the varying nature of the highway, street, or road systems with which the freeway or expressway must connect, the spacings between individual adjacent interchanges may vary considerably. In urban areas, the minimum distance between adjacent interchanges should not be less than 1 mi (1.6 km), and in rural areas not less than 2 mi (3.2 km).

www.EngineeringEBooksPdf.com

Interchange Type. The most commonly used types of interchanges where two routes cross each other are the diamond, cloverleaf, and directional interchanges. When one route ends at an interchange with another route, a trumpet or three-leg directional interchange can be used. Figure 2.40 shows schematic examples of the various types of interchanges. The trumpet interchange (a) has one loop ramp in its design, which is a lower-speed ramp. The three-leg directional interchange (b) incorporates all high-speed ramps in its design. The "one quadrant" interchange (c) has a two-way ramp with at-grade intersections, all in one quadrant of the interchange. This is used primarily in urban areas where the routes are both two-way roadways. Typically, this is utilized as a first stage in a developing area. Right of way in one or more other quadrants is purchased to allow for future expansion. The diamond interchange (d) is the most common type where a major facility intersects a minor facility. The capacity is limited by the at-grade intersections at the minor crossroad. The single-point urban interchange (SPUI) shown in (e) can be used when the minor road traffic volume increases and the diamond operation begins to bog down or fail. It allows the use of a single intersection and usually operates on a three-phase traffic signal. Opposing left turns from either the ramps or the side road do not cross paths and therefore can run in the same phase. The third phase is the through traffic on the side road. The partial cloverleaf interchange (f) can be designed to allow some free-flow right turns from the minor road or at least eliminate the need for left turns from the minor road. Signals are usually required to allow access for left-turning vehicles from the ramps onto the minor road. The full cloverleaf interchange (g) eliminates the need for at-grade signalized intersections by providing continuous-flow movements for all traffic. This is used when two major freeways or freeway-style roadways intersect. Under high volumes of traffic, the short weaving distance between the interior ramp terminals creates congestion problems. The use of collector-distributor roads can alleviate some of this problem by separating the through traffic from the entering/exiting traffic. The all-directional four-leg interchange (h) is the most efficient in terms of handling traffic, but is also usually the most expensive. It requires the most right of way and the incorporation of additional bridge structures to accommodate four levels of traffic.

2.5 INTERCHANGE RAMP DESIGN

An interchange ramp is a roadway that connects two legs of an interchange. Ramp cross-section elements are discussed in Art. 2.3, Cross-Section Design. Elements contributing to horizontal and vertical alignments are designed similar to any roadway once the ramp design speed has been determined.

2.5.1 Ramp Design Speed

To design horizontal and vertical alignment features, a design speed must be determined for each ramp. Since the driver expects a speed adjustment on a ramp, the design speed may vary within the ramp limits. Table 2.28 includes three ranges of ramp design speeds that vary with the design speed of the mainline roadway. The ramp design speed range is determined by judgment based on several conditions:

- The types of roadways at each end of the ramp and their design speeds
- The length of the ramp

www.EngineeringEBooksPdf.com

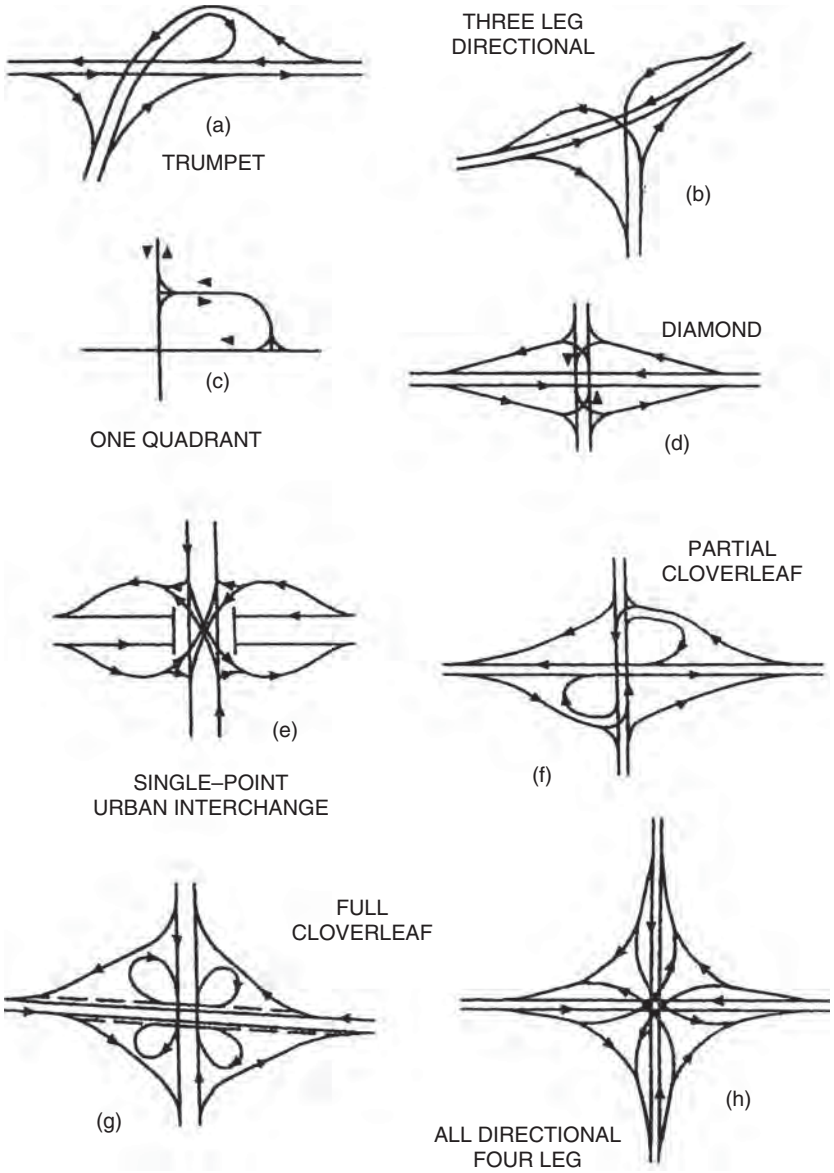

FIGURE 2.40 Common types of interchanges. (*a*) Trumpet. (*b*) Three-leg directional. (*c*) One quadrant. (*d*) Diamond. (*e*) Single-point urban. (*f*) Partial cloverleaf. (*g*) Full cloverleaf. (*h*) All directional four leg. (*From* A Policy on Geometric Design of Highways and Streets, *American Association of State Highway Officials, 2004, with permission*)

www.EngineeringEBooksPdf.com

TABLE 2.28 Guide for Selecting Ramp Design Speed

Mainline design speed, mi/h	30	35	40	45	50	55	60	65	70
Ramp design speed, upper range, mi/h	25	30	35	40	45	45	50	55	60
Ramp design speed, middle range, mi/h	20	25	30	30	35	35	40	45	50
Ramp design speed, lower range, mi/h	15	15	20	20	25	25	30	30	35
Mainline design speed, km/h	48	56	64	72	80	88	97	105	113
Ramp design speed, upper range, km/h	40	48	56	64	72	72	80	88	97
Ramp design speed, middle range, km/h	32	40	48	48	56	56	64	72	80
Ramp design speed, lower range, km/h	24	24	32	32	40	40	48	48	56

Source: *Location and Design Manual,* Vol. 1, *Roadway Design,* Ohio Department of Transportation, with permission.

- The terminal conditions at each end
- The type of ramp (diamond, loop, or directional)

Diamond ramps normally have a high-speed condition at one end and an at-grade intersection with either a stop or a slow turn condition at the other. Upper- to middle-range design speeds in Table 2.28 are normal near the high-speed facility. Middle- to lower-range design speeds are usually used closer to the at-grade intersection. Loop ramps may have a high-speed condition at one end and either a slow- or a high-speed condition at the other. Loop ramps, because of their relatively short radius, usually have lower-range design speeds in the middle- and slow-speed end of the ramp, and upper- to middle-range design speeds nearer the high-speed terminal(s). Directional ramps generally have high-speed conditions at both ends. They are normally designed using an upper-range design speed, and the absolute minimum design speed should be from the middle range.

2.5.2 Single-Lane Ramp Terminals

A ramp terminal is the portion of a ramp adjacent to the through lane on the mainline. It includes both the taper and the speed-change lane. Ohio has recently revised its terminal criteria and uses two basic terminal classifications:

High-speed terminals are intended for use on all facilities with a design speed of 50 mi/h (80 km/h) or higher. They are used in both rural and urban locales. Figure 2.41 shows the details for high-speed single-lane *entrance* terminals. This terminal is a taper-type design for the last 1250 ft (381 m), tapering from a 25-ft (7.6-m) offset from the mainline to zero. Tables A and B in Fig. 2.41 provide information for designing the length of the terminal to provide adequate distance for entering vehicles that matches or nearly matches the design speed of the mainline. This must be achieved by the time the terminal narrows to 12 ft (3.7 m) in width (see Fig. 2.41). Figure 2.42 provides design information for high-speed single-lane *exit* terminals that are used in both rural and urban locales. In the urban environment, a sharper departure curve is permitted for the exit curve, which allows for a slower speed exit. Once again, Tables A and B are provided in Fig. 2.42 to determine the proper terminal length based on mainline speed, first curve speed, and vertical grade adjustment.

www.EngineeringEBooksPdf.com

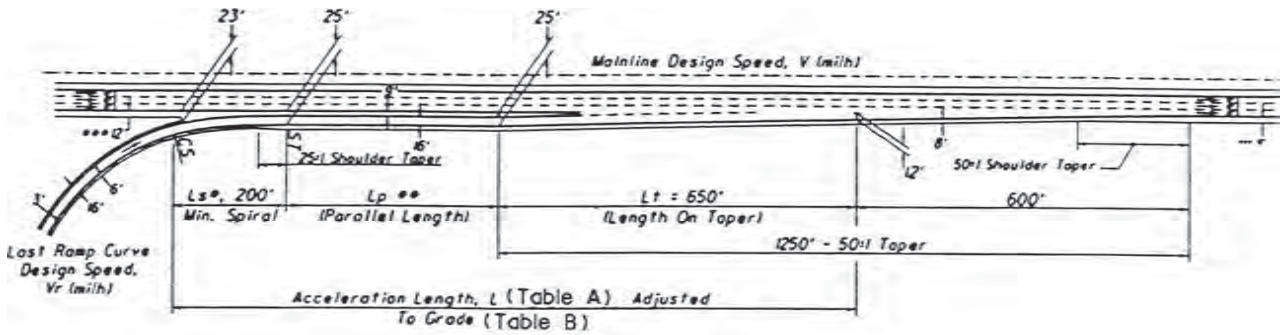

* Length May Be Increased For Superelevation Transition
** To Determine Lp, Subtract Ls And Lt From L.
*** Mainline paved shoulder width as required by

Notes For Single Lane Entrance Terminals

1. The minimum acceleration length, L shall be Ls + Lt.
2. The 9' to 23' variable width of treated shoulder of the entrance terminal shall be sloped for 12' as required for mainline design (usually ½in./ft.), except for the last 100' to 200' at the 9' end, which is to be sloped as required for proper terminal grading.
3. Normally single lane ramps will have a width of 16'. The width shall be increased to 18' when the ramp radius is less than 200'. When an 18' wide ramp is used, the 25' entrance terminal width shall be retained and the 9' width reduced by 2'.
4. If Lp (parallel length) is not required (L <= 850'), then the 200' minimum spiral should be tangent to the 50:1 taper.

FIGURE 2.41 High-speed single-lane entrance terminal. Conversions: 1 mi/h = 1.609 km/h, 1 ft = 0.305 m. (*From* Location and Design Manual, *Vol. 1*, Roadway Design, *Ohio Department of Transportation, with permission*)

www.EngineeringEBooksPdf.com

TABLE A Minimum acceleration lengths for high-speed entrance terminals with flat grades of 2% or less

Mainline Design Speed, V (mph)	Acceleration length, L (ft) for design speed of last ramp curve, Vr (mph)								
	Stop	15	20	25	30	35	40	45	50
50	720	660	610	550	450	350	130	-	-
55	960	900	810	780	670	550	320	150	-
60	1200	1140	1100	1020	910	800	550	420	180
65	1410	1350	1310	1220	1120	1000	770	600	370
70	1620	1560	1520	1420	1350	1230	1000	820	580

TABLE B High-speed entrance terminal adjustment factors as a function of grade

Mainline Design Speed (mph)	Ratio of length on grade to length on level for design speed of last ramp curve (mph)*							
	20	25	30	35	40	45	50	All Speeds
	3 to 4% upgrade							3 to 4% downgrade
50	1.30	1.35	1.40	1.40	1.40	-	-	0.65
55	1.35	1.40	1.45	1.45	1.45	-	-	0.625
60	1.40	1.45	1.50	1.50	1.50	1.55	1.60	0.60
65	1.45	1.50	1.55	1.55	1.60	1.65	1.70	0.60
70	1.50	1.55	1.60	1.65	1.70	1.75	1.80	0.60
	5 to 6% upgrade							5 to 6% downgrade
50	1.50	1.60	1.70	1.80	1.90	-	-	0.55
55	1.60	1.70	1.80	1.90	2.05	-	-	0.525
60	1.70	1.80	1.90	2.05	2.20	2.35	2.50	0.50
65	1.85	1.95	2.05	2.20	2.40	2.60	2.75	0.50
70	2.00	2.10	2.20	2.40	2.60	2.80	3.00	0.50

No adjustment required for grades less than 3%.

* Ratio from this table multiplied by acceleration length in Table A gives acceleration length on grade.

The "grade" in the table is the average grade measured over the distance for which the acceleration length applies.

FIGURE 2.41 High-speed single-lane entrance terminal. Conversions: 1 mi/h = 1.609 km/h, 1 ft = 0.305 m. (*From* Location and Design Manual, *Vol. 1*, Roadway Design, *Ohio Department of Transportation, with permission*) (*Continued*)

www.EngineeringEBooksPdf.com

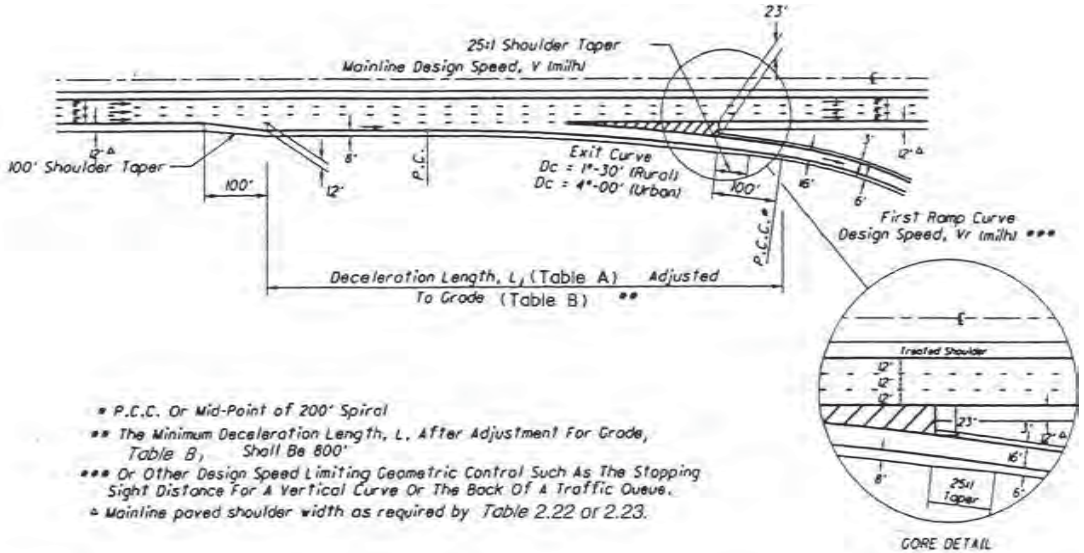

* P.C.C. Or Mid-Point of 200' Spiral

** The Minimum Deceleration Length, L, After Adjustment For Grade, Table B, Shall Be 800'

*** Or Other Design Speed Limiting Geometric Control Such As The Stopping Sight Distance For A Vertical Curve Or The Back Of A Traffic Queue.

△ Mainline paved shoulder width as required by Table 2.22 or 2.23.

Notes For Single-Lane Exit Terminals

1. The Exit Curve should normally be 1°-30' (Rural) or 4°-00' (Urban) where the mainline is on tangent. Where the mainline is on curving alignment, the maximum differential between the Exit Curve and the mainline curve should normally be 1°-30' (Rural) or 4°-00' (Urban). This differential, however, may vary by as much as one degree in order to avoid a tangent exit alignment. (See Section 503.6.4 for the allowable transverse breaks in superelevation cross-slope.)
2. When the First Ramp Curve does not exceed 8°, the Exit Curve may be compounded directly with the First Ramp Curve at a PCC 100' beyond the nose. When the First Ramp Curve does exceed 8°, a spiral should be placed between the Exit Curve and the First Ramp Curve and the beginning of the spiral (CS) should be at the nose.
3. Normally single lane ramps will have a width of 16'. The width shall be increased to 18' when the ramp radius is less than 200'. When an 18' wide ramp is used, the 39' exit terminal width shall be retained and the 23' width reduced by 2'.

FIGURE 2.42 High-speed single-lane exit terminal. Conversions: 1 mi/h = 1.609 km/h, 1 ft = 0.305 m. (*From* Location and Design Manual, *Vol. 1*, Roadway Design, *Ohio Department of Transportation, with permission*)

www.EngineeringEBooksPdf.com

TABLE A Minimum deceleration lengths for high-speed exit terminals with flat grades of 2% or less

Mainline Design Speed, V (mph)	Deceleration length, L (ft) for design speed of first ramp curve, Vr (mph) ***								
	Stop	15	20	25	30	35	40	45	50
50	435	405	385	355	315	285	225	175	-
55	480	455	440	410	380	350	285	235	-
60	530	500	480	460	430	405	350	300	240
65	570	540	520	500	470	440	390	340	280
70	615	590	570	550	520	490	440	390	340

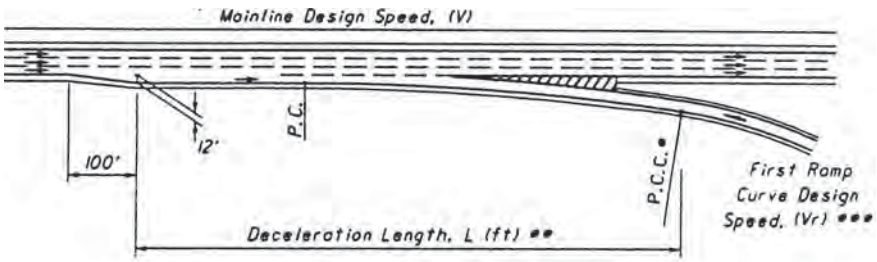

* P.C.C. Or Mid-Point of 200' Spiral

** The Minimum Deceleration Length, L, After Adjustment For Grade (Table B) IS 800'

*** Or Other Design Speed Limiting Geometric Control Such As The Stopping Sight Distance For A Vertical Curve Or The Back Of A Traffic Queue.

TABLE B High-speed exit terminal adjustment factors as a function of grade

Mainline Design Speed (mph)	Ratio of length on grade to length on level for design speed of first ramp curve (mph)*	
	All Speeds	All Speeds
	3 to 4% upgrade	3 to 4% downgrade
All Speeds	0.90	1.20
	5 to 6% upgrade	5 to 6% downgrade
All Speeds	0.80	1.35

No adjustment required for grades less than 3%.

* Ratio from this table multiplied by deceleration length in Table A gives deceleration length on grade.

The "grade" in the table is the average grade measured over the distance for which the deceleration length applies.

FIGURE 2.42 High-speed single-lane exit terminal. Conversions: 1 mi/h = 1.609 km/h, 1 ft = 0.305 m. (*From* Location and Design Manual, *Vol. 1*, Roadway Design, *Ohio Department of Transportation, with permission*) (*Continued*)

www.EngineeringEBooksPdf.com

Low-speed terminals are intended for use on highways that have little or no access control except through an interchange area. Many of the features of low-speed terminals are applicable to a terminal of one ramp with another ramp in complex interchanges. Low-speed terminals are also used with collector-distributor roads. Figure 2.43 and Table 2.29 provide design details for low-speed terminals.

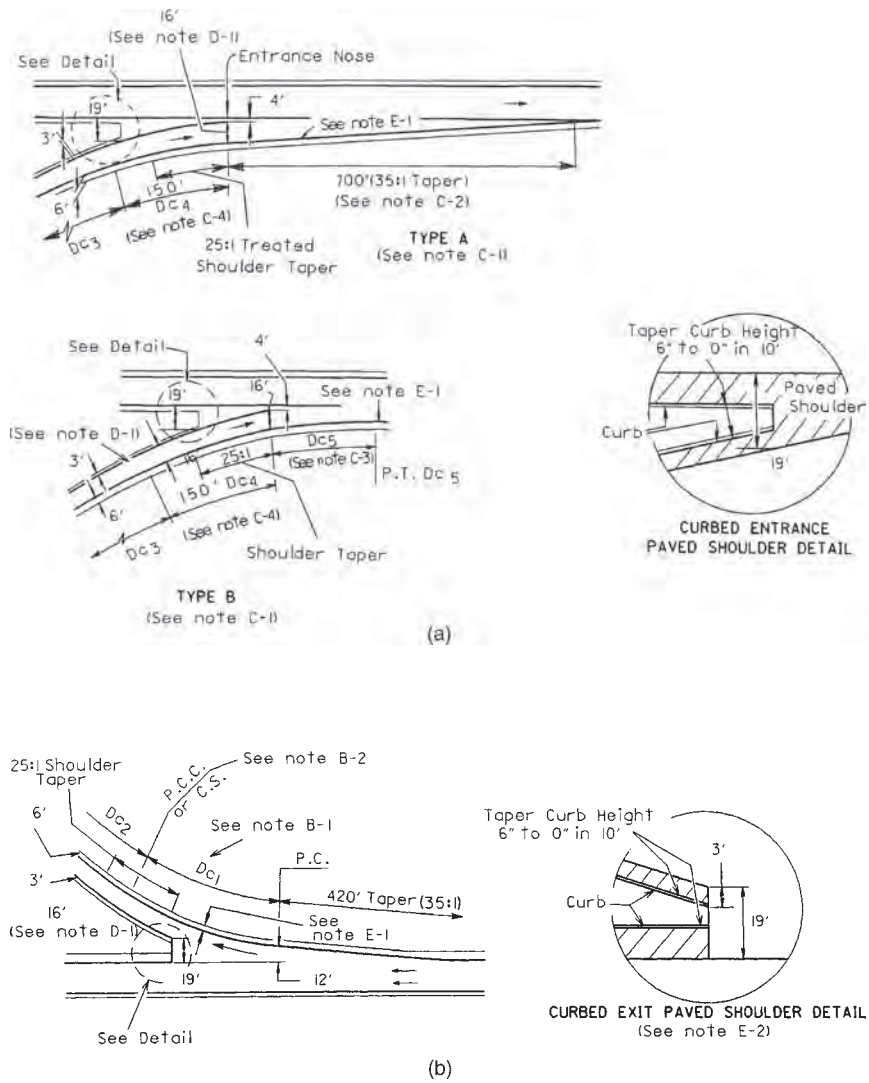

FIGURE 2.43 Low-speed ramp terminals. (*a*) Entrance terminals. (*b*) Exit terminals. See Table 2.29 for notes. Conversions: 1 ft = 0.305 m, 1 in = 25.4 mm. (*From* Location and Design Manual, *Vol. 1,* Roadway Design, *Ohio Department of Transportation, with permission*)

www.EngineeringEBooksPdf.com

TABLE 2.29 Design Notes for Low-Speed Entrance and Exit Terminals

See Fig. 2.43

A. *General*
   1. Low-speed terminals are intended for use on highways which have little or no access control except through an interchange area. Many of the features of low-speed terminals are applicable to a terminal of one ramp with another ramp in a freeway interchange.

B. *Exit terminal*
   1. The curve differential between the through roadway and exit curve Dc_1 may vary from a minimum of 4° to the maximum allowable differential.
   2. Exit curve Dc_1 may be either compounded or spiraled into ramp curve Dc_2.

C. *Entrance terminal: type A and type B*
   1. Type A is preferred and shall normally be used; however, when a ramp enters as an added lane or as a combined acceleration-deceleration lane, type B may be used if its use would result in a substantial savings in cost (i.e., reduced bridge width).
   2. The acceleration lane of type A shall be a uniform taper (35:1) relative to the through pavement edge for either tangent or curving alignment.
   3. The curve differential between the through roadway and entrance curve Dc_5 of type B shall be 4°.
   4. The design of the entrance terminal shall be based on the following:
      (*a*) *Ramp curve* Dc_3 *of 8° or less.* When the through roadway is on a tangent or a curve to the right, Dc_4 shall be a 150-ft-long simple curve of a degree such that the differential between it and the through roadway will not exceed 4°. When the through roadway is on a curve to the left, a 150-ft tangent shall be substituted for Dc_4.
      (*b*) *Ramp curve* Dc_3 *greater than 8°.* A 150-ft spiral shall be substituted for Dc_4.

D. *Ramp width*
   1. Normally, single-lane ramps will have a width of 16 ft. The width shall be increased to 18 ft when the ramp radius is less than 200 ft. When an 18-ft-wide ramp is used, the 35-ft exit and 20-ft entrance terminal widths shall be retained and the 19- and 4-ft widths reduced 2 ft.

E. *Treated shoulder*
   1. The width of the treated shoulders along the speed change lane shall be as shown in Fig. 2.25.
   2. If the ramp or through roadway has a curb offset greater than 6 ft (or 3 ft) the greater width shall be used at the terminal. Retain the 19-ft width.
   3. The special detail drawings shall apply when the through roadway is curbed.

F. *Left side terminals*
   1. Left side entrance and exits shall be designed similarly to the drawing shown, but of opposite hand.

Conversion: 1 ft = 0.305 m.

Source: *Location and Design Manual,* Vol. 1, *Roadway Design,* Ohio Department of Transportation, with permission.

2.5.3 Superelevation at Terminals

Superelevation at ramp terminals should be developed using the following guidelines. The rate of superelevation at the entrance and exit nose should be selected on the basis of the design speed of the ramp at the nose. All transverse changes or breaks in superelevation should be made at joint lines in concrete pavement. In the case of bituminous pavement, the superelevation breaks should occur in the same locations as they would in concrete

www.EngineeringEBooksPdf.com

pavement. For high-speed terminals, the transverse breaks in superelevation cross slope should not exceed a differential of 0.032 ft/ft (0.032 m/m) at the mainline pavement edge or 0.050 ft/ft (0.050 m/m) at other locations. When a double break occurs on longitudinal joints less than 6 ft (1.83 m) apart, it should not exceed a total differential of 0.032 ft/ft (0.032 m/m), if adjacent to the mainline, or 0.050 ft/ft (0.050 m/m) elsewhere. On low-speed terminals, the transverse breaks in superelevation cross slope should not exceed a differential of 0.05 to 0.06 ft/ft (0.05 to 0.06 m/m). For high-speed terminals, the rate of rotation of a superelevated ramp pavement or speed change lane pavement should be in accordance with rates from Table 2.13. Where possible, the terminal area pavement and shoulder should slope away from the mainline pavement so that a minimum amount of water drains across the mainline pavement.

2.5.4 Terminals on Crest Vertical Curves

Mainline crest vertical curves in the vicinity of ramp terminals should be designed using stopping sight distance values 25 percent higher than the design speed value from Table 2.18. Where a crest vertical curve occurs on an exit ramp at or near the nose, the crest vertical curve should be designed using the "upper-range" design speeds of Table 2.28.

2.5.5 Ramp At-Grade Intersections

Ramp at-grade intersections are designed using many of the same criteria as outlined in Art. 2.4.1. However, one of the basic differences is the one-way nature of ramps and the fact that most traffic at ramp intersections is turning. Figure 2.44 shows the design of a typical uncurbed ramp intersection. Curbed returns are normally used in urban areas where space is more restricted.

2.6 COLLECTOR-DISTRIBUTOR ROADS

Collector-distributor (C-D) roads are used to minimize weaving problems and reduce the number of conflict points (merging and diverging) on the mainline. C-D roads may be used within a single interchange, through two adjacent interchanges, or continuously through several interchanges.

2.6.1 Design of C-D Roads

When a C-D road is provided between interchanges, a minimum of two lanes should be used. Either one or two lanes may be used on C-D roads within a single interchange. The cross-section elements for one- and two-lane C-D roads should be in accordance with the criteria for one-lane and two-lane directional roadways provided in Fig. 2.27. The separation between the mainline and C-D road pavements should be designed to prevent, or at least discourage, indiscriminate crossovers. As a minimum, the separation should be wide enough to provide normal shoulder widths for both the mainline and C-D road roadways plus a suitable median. Normally, a standard concrete barrier median is used, since C-D road separation often involves obstructions such as bridge parapets, piers, or overhead sign supports. There may be isolated cases where a lesser-type median may be used.

www.EngineeringEBooksPdf.com

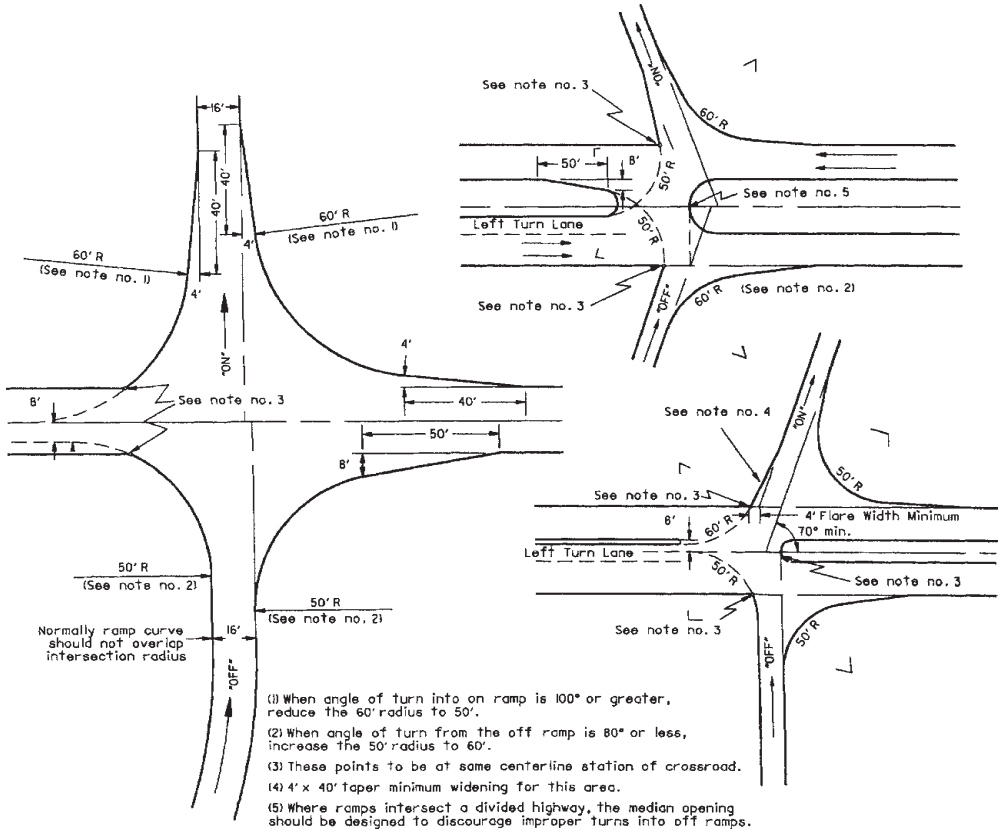

FIGURE 2.44 Design for ramp intersection without curbs. Conversion: 1 ft = 0.305 m. (*From* Location and Design Manual, *Vol. 1,* Roadway Design, *Ohio Department of Transportation, with permission*)

www.EngineeringEBooksPdf.com

2.6.2 C-D Road Entrance and Exit Terminals

Figure 2.45*a* shows both high-speed and low-speed C-D road entrance terminals. The high-speed collector-distributor entrance terminal is intended for use on rural interstate highways and other freeways where high-speed design has been designated. The low-speed collector-distributor entrance terminal is intended for use on all other freeways. Three exit terminal lane conditions are shown on Fig. 2.45*b*. These terminal designs are to be applied to highways using either high-speed or low-speed terminals.

Superelevation at C-D terminals should be developed similar to that prescribed for standard ramp terminals.

2.7 MULTILANE RAMP AND ROADWAY TERMINALS AND TRANSITIONS

When two roadways converge or diverge, the less significant roadway should exit or enter on the right. Left-hand exits or entrances are contrary to driver expectancy and should be avoided wherever possible.

2.7.1 Multilane Entrance Ramps and Converging Roadways

Figure 2.46 shows recommended designs to be used for multilane entrance ramps and converging roadways. Converging roadways are defined as separate and nearly parallel roadways or ramps that combine into a single continuous roadway or ramp having a greater number of lanes beyond the nose than the number of lanes on either approach roadway. High-speed and low-speed entrance terminals should be used in lieu of converging roadway drawings when applicable. High-speed converging roadways should be used when either or both of the converging roadways are mainline roadways of an expressway or a freeway. Low-speed terminals should be used at the convergence of directional ramps within an interchange or at the convergence of interchange ramps with non-limited-access roads or streets. In general, low-speed terminals are applicable at all locations other than those requiring the use of high-speed terminals.

Lane Balance and Continuity. To avoid inside merges, the number of mainline lanes plus converging lanes approaching the nose must be equal to the resultant number of lanes leaving the nose. To make this possible, it is often necessary to carry additional mainline lanes past the nose for an adequate distance prior to tapering back to the desired number of lanes. These details are shown in Fig. 2.46.

Preferential Flow. In Fig. 2.46, one roadway in each design is labeled "preferential flow." This indicates the more important of the two approaching traffic flows. In selecting the preferential flow, a designer must consider the effect of traffic volumes, number of lanes, the continuity and importance of signed routes, vehicle speeds, and roadway alignment. Lanes carrying the preferential flow are given the higher design treatment. When it is necessary to reduce a number of converging lanes or where an angular change in direction must occur, the design should favor the preferential flow.

Horizontal Curvature. Horizontal curves of roadways approaching the terminal nose should conform to mainline roadway criteria in the case of mainline roadways and to ramp entrance terminal criteria in the case of ramps.

www.EngineeringEBooksPdf.com

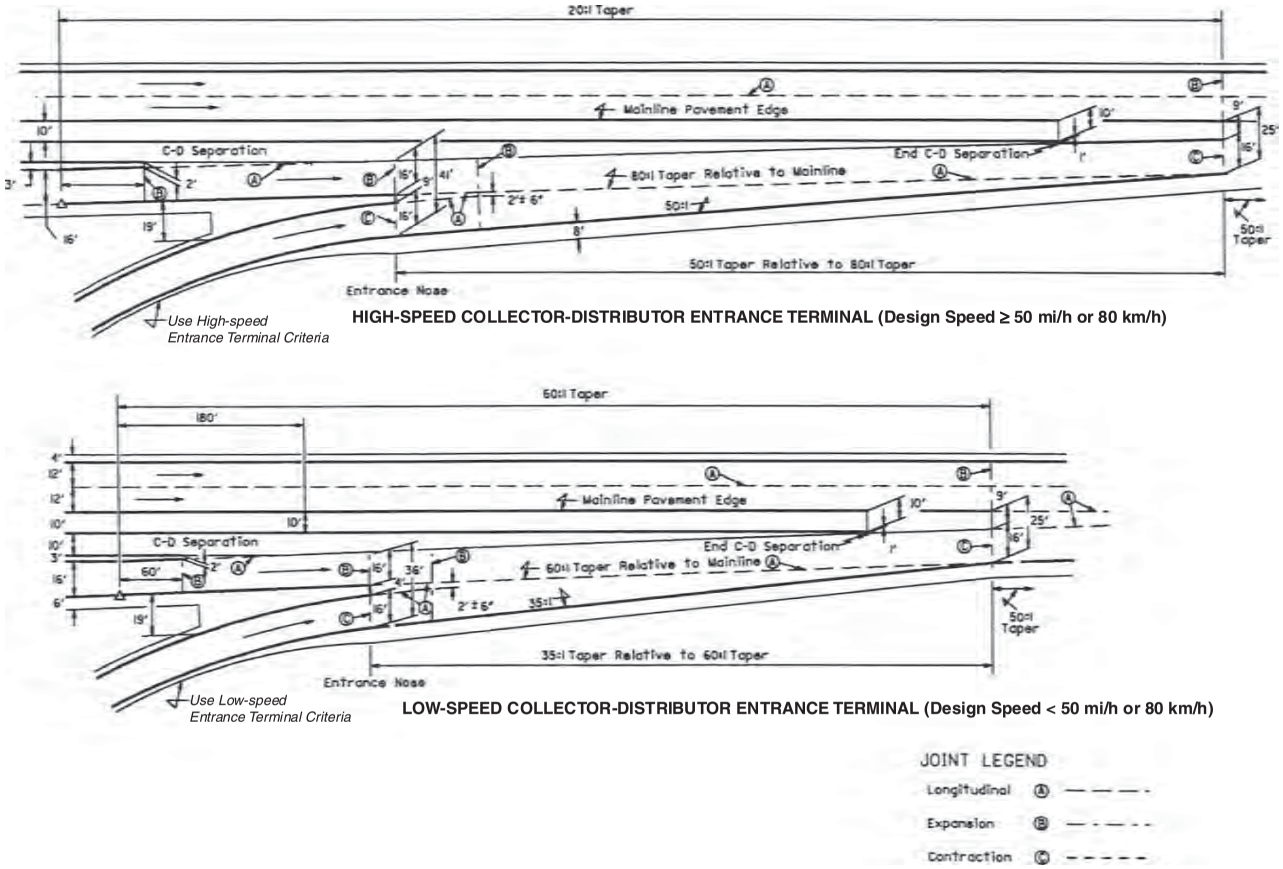

FIGURE 2.45*a* Entrance terminals for collector-distributor roads. Conversion: 1 ft = 0.305 m. (*From* Location and Design Manual, *Vol. 1,* Roadway Design, *Ohio Department of Transportation, with permission*)

www.EngineeringEBooksPdf.com

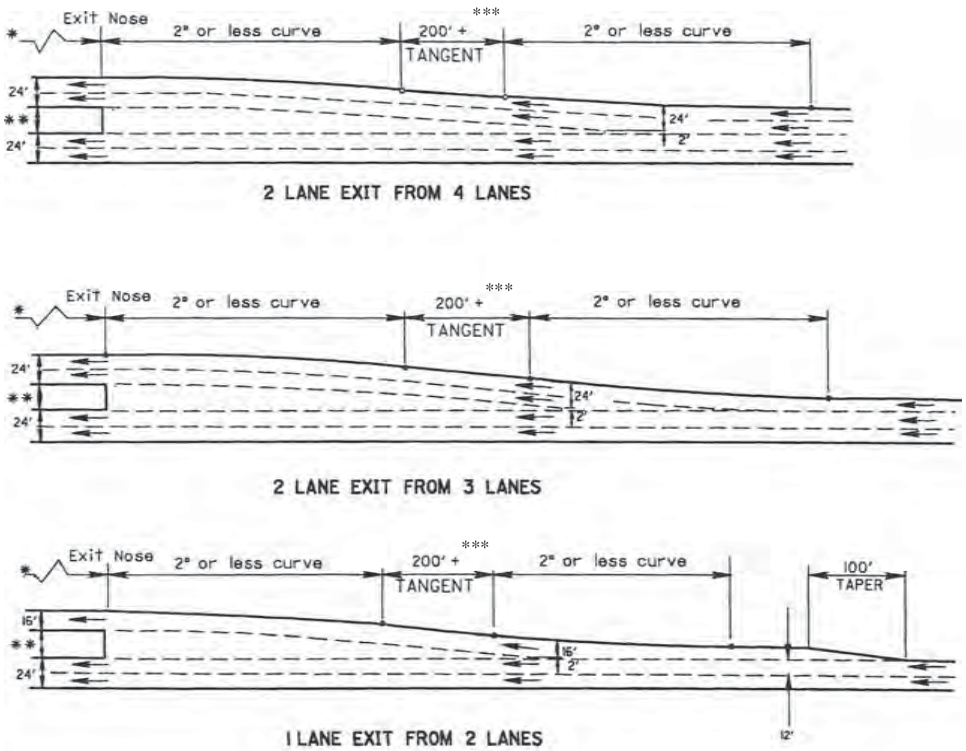

* Distance to first ramp exit nose 600′ minimum with up to 1000′ desirable especially for 2 lane C-D roads and for Class I Design

** Width determined by type of C-D separation chosen

*** Or as required for superelevation transitions

FIGURE 2.45*b* Exit terminals for collector-distributor roads. Conversion: 1 ft = 0.305 m. (*From* Location and Design Manual, *Vol. 1,* Roadway Design, *Ohio Department of Transportation, with permission*)

www.EngineeringEBooksPdf.com

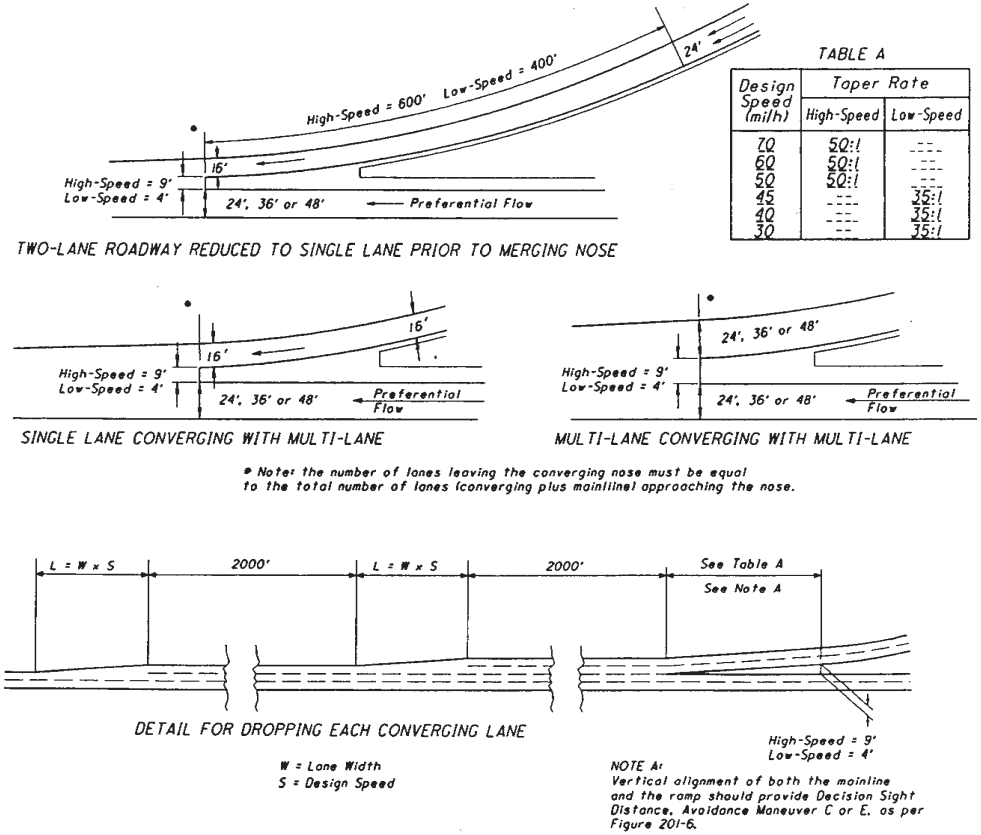

TABLE A

Design Speed (mi/h)	Taper Rate	
	High-Speed	Low-Speed
70	50:1	---
60	50:1	---
50	50:1	---
45	---	35:1
40	---	35:1
30	---	35:1

FIGURE 2.46 Designs for multilane entrance ramps and converging roadways. Conversions: 1 mi/h = 1.609 km/h, 1 ft = 0.305 m. (*From* Location and Design Manual, *Vol. 1,* Roadway Design, *Ohio Department of Transportation, with permission*)

www.EngineeringEBooksPdf.com

Crest Vertical Curves. Crest vertical curves on constant-width roadways approaching the merging nose should be designed to provide sight distance consistent with the design speed of the roadway. Crest vertical curves from the merging nose forward to a point where pavement convergence ceases, and to the converging portion of an approaching roadway where the number of lanes is being reduced in advance of the nose, should be designed using stopping sight distance values 25 percent higher than shown in Table 2.18. When design speeds differ on approaching roadways, the higher of the two design speeds should be used in designing the crest vertical curve beyond the merging nose.

Superelevation and Joint Location. Superelevation in the terminal area should be designed in accordance with the guidelines given for single-lane ramp terminals. Longitudinal joints should be located so they will coincide with and define the lane lines.

2.7.2 Multilane Exit Ramps and Diverging Roadways

Figure 2.47 shows recommended designs for multilane exit ramps and diverging roadways. A diverging roadway is defined as a single roadway that branches or forks into two separate roadways without the use of a speed change lane.

Class I and II diverging roadways should be used when either or both the diverging roadways are mainline roadways of an expressway or a freeway. Class III diverging roadways should be used at the divergence of directional ramps within an interchange or at the divergence of ramps with non-limited-access roads or streets. In general, class III is applicable at all locations other than those requiring class I or class II.

Lane Balance and Continuity. To have lane continuity, the number of mainline lanes leaving the diverging nose must be equal to the number of mainline lanes approaching the nose. The total number of lanes leaving the diverging nose (mainline lanes plus diverging lanes) must be 1 greater than the total number of lanes approaching the nose to obtain lane balance. The purpose of obtaining lane continuity and lane balance is to avoid a drop lane situation.

It may be necessary to obtain lane balance by adding additional lanes upstream from the diverging nose. The length of each additional lane should be 2500 ft (762 m) and should be introduced using a 0- to 12-ft (3.7-m) taper of 100 ft (30 m) as recommended in Fig. 2.47 for the approach roadway class and design speed. There may be conditions off the mainline, such as on collector-distributor roads or within interchanges, where lane balance and continuity are less important. In such cases, the special diverging roadway design shown in Fig. 2.47*b* may be used.

Terminal Design. The design of diverging roadway terminals is determined by the class and design speed of the approach roadway, and is based on the required neutral gore length L and the required nose width N. Figure 2.47 includes recommended length L and nose width N for various design speeds in diverging roadway classes.

Horizontal Curvature. The inset table in Fig. 2.47 lists recommended values for the diverging curvature (curve differential) between the outer pavement edges of diverging roadways. These values apply only when the alignment between the diverging nose and the PC of the diverging curvature is on tangent or simple curvature. When compounded or spiral curvature is used in the diverging area, it will be necessary to design diverging roadway alignments individually to provide proper L and N for the approach roadway class and design speed.

www.EngineeringEBooksPdf.com

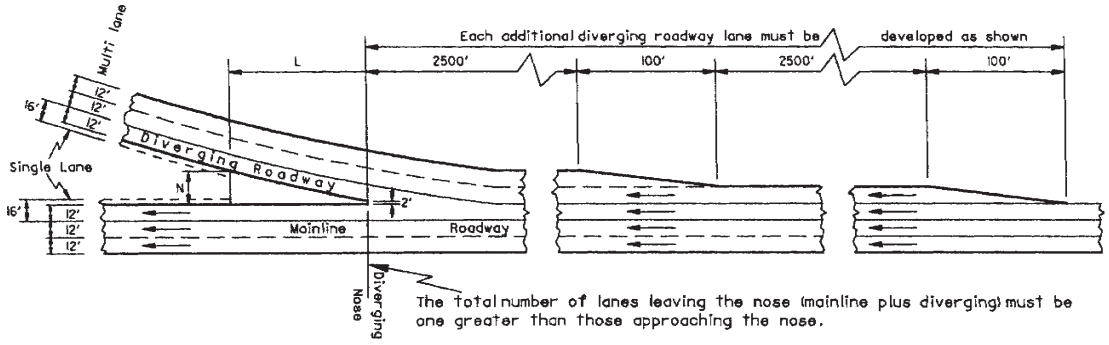

DIVERGING ROADWAY OR MULTILANE EXIT RAMP DESIGN

(a)

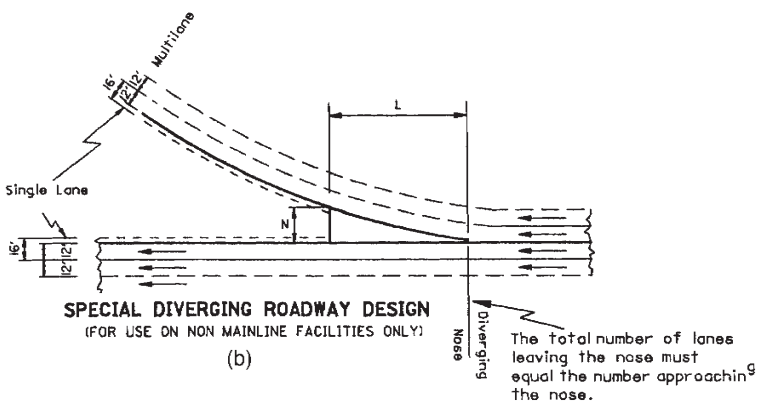

SPECIAL DIVERGING ROADWAY DESIGN

(FOR USE ON NON MAINLINE FACILITIES ONLY)

(b)

RECOMMENDED GORE LENGTH AND NOSE WIDTH

Design Speed "V" mi/h	"L" Gore Length (ft.) High-Speed Rural	"L" Gore Length (ft.) High-Speed Urban	"L" Gore Length (ft.) Low-Speed	"W" * Nose Width (ft.) High-Speed Rural	"W" * Nose Width (ft.) High-Speed Urban	"W" * Nose Width (ft.) Low-Speed
70	450	370		32	24	
65	400	340		32	24	
60	370	300		32	24	
55	350	280		32	24	
50	320	260		32	24	
45			180			24
40			160			24
35			140			24
30			120			24

* N dimension includes 4' of a 16' lane

RECOMMENDED DIVERGING CURVATURE

Design Speed of Approaching Roadway "V" mi/h	DIVERGING CURVATURE Total Lanes Beyond Diverging Nose Equals Approach Lanes: High-Speed Rural	High-Speed Urban	Low-Speed A	Approach Lanes +1: High-Speed Rural	High-Speed Urban	Low-Speed A
70	1°- 00'	1°- 00'		0°- 30'	0°- 30'	
65	1°- 15'	1°- 15'		0°- 35'	0°- 35'	
60	1°- 30'	1°- 30'		0°- 40'	0°- 40'	
55	1°- 45'	1°- 45'		0°- 45'	0°- 45'	
50	2°- 00'	2°- 00'		1°- 00'	1°- 00'	
45			4°- 15'			1°- 45'
40			5°- 30'			2°- 15'
35			7°- 00'			2°- 45'
30			10°- 00'			3°- 30'

A Based on a Design Speed equal to ("V" - 10 mi/h)

FIGURE 2.47 Designs for multilane exit ramps and converging roadways. Conversions: 1 mi/h = 1.609 km/h, 1 ft = 0.305 m. (*From* Location and Design Manual, *Vol. 1,* Roadway Design, *Ohio Department of Transportation, with permission*)

www.EngineeringEBooksPdf.com

Crest Vertical Curves. When a diverging nose is located on a crest vertical curve, the curve should be designed using the design speed of the approach highway and a stopping sight distance value 25 percent higher than shown in Table 2.18.

Superelevation and Joint Location. The superelevation rate should be based on the design speed of the approach roadway. Superelevation in the terminal area should be designed in accordance with the guidelines given for single-lane ramp terminals (Art. 2.5.2). Longitudinal joints should be located so they will coincide with and define the lane lines.

2.7.3 Four-Lane Divided to Two-Lane Transition

Figure 2.48 shows a reversed curve design (types A and B), a tapered design (type C), and a design for a transition on a curve (type D) for achieving a four-lane divided to two-lane transition. The pavement transition should be located in an area where it can easily be seen. Intersections or drives should be avoided in the transition area. Vertical or horizontal curves should provide preferred stopping sight distance. Reverse curve transitions should normally be used for median widths of 20 ft (6 m) or wider. Taper lengths are based on the design speed of the mainline and are calculated from Eq. (2.5).

2.8 SERVICE ROADS

Service roads, or *frontage* roads, as they are sometimes called, are used to enhance capacity on the mainline, control access, serve adjacent properties, or maintain traffic circulation. They permit development of adjacent properties while preserving the through character of the mainline roadway. Service roads may be either one-way or two-way, depending on where they are located and the purpose they are intended to serve.

Although the alignment and profile of the mainline may have an influence, service roads are generally designed to meet specific criteria based on functional classification (usually "local"), traffic volumes, terrain or locale, and design speed. Two features, however, are unique to service roads and are further discussed below. They are (1) the separation between the service road and mainline and (2) the design of the crossroad connection.

The farther the service road is located from the mainline, the less influence the two facilities will have on each other. A separation width that exceeds the clear zone measurement for each roadway is desirable. However, the separation should be at least wide enough to provide normal shoulder widths on each facility, and also to accommodate surface drainage and a suitable physical traffic barrier. Glare screen is desirable to screen headlights when the service road is two-way.

At intersections with crossroads to the mainline, the distance between the mainline and service road becomes critical. This distance should be great enough to provide adequate storage on the crossroad approach lanes to both the mainline and service road. The recommended minimum distance between the mainline and service road pavement edges is 150 ft (46 m) in urban areas and 300 ft (91 m) in rural areas. In addition, the designer should check the adequacy of stopping sight distance on the crossroad as well as intersection sight distance at the service road.

www.EngineeringEBooksPdf.com

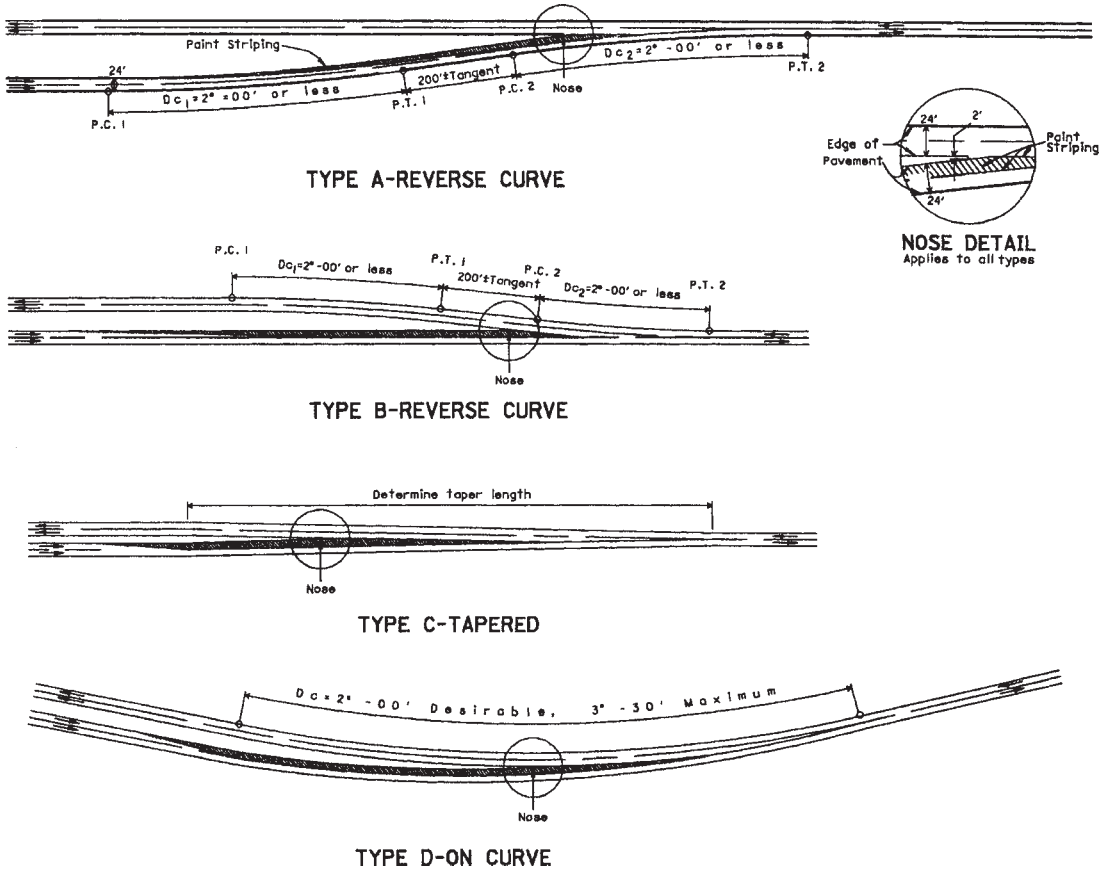

FIGURE 2.48 Transitions from four-lane divided roadway to two-lane roadway. Conversion: 1 ft = 0.305 m. (*From* Location and Design Manual, *Vol. 1,* Roadway Design, *Ohio Department of Transportation, with permission*)

www.EngineeringEBooksPdf.com

2.9 ACCESS TO PUBLIC ROADS

2.9.1 Defining Access Control

Control of access is the condition where the right of owners or occupants of abutting land to access a highway is fully or partially controlled by public authority. Access control is usually defined by regulations of the authority having jurisdiction over the roadway. The purpose of establishing access control is to provide for the safe and expeditious movement of vehicles on the street or highway, while upgrading the level of service and safety to those living near and using the facility. Regulations may be categorized as full control of access, partial control of access, and driveway and approach regulations.

Full control of access is the means by which preference is given to through traffic by providing access connections only at selected public roads and by prohibiting at-grade crossings and direct private driveway connections. Partial control of access still gives preference to through traffic, but allows some at-grade crossings and some driveway connections. Driveway or approach regulations may apply where no control of access is obtained. Each abutting property is permitted access to the street or highway, but the location, number, and geometrics of the access points may be governed by the regulations.

2.9.2 Establishing Access Control

Access control may be exercised and established by statute—through zoning ordinances, driveway controls, and turning and parking regulations—and by geometric design. Control by statute is used where full access control or a high degree of access control is required. Direct driveway connections may be prohibited, and at-grade intersections may be allowed only with major crossroads. This may be employed for a major urban arterial.

Zoning can control the type of property development adjacent to the roadway, and thereby influence the amount and type of traffic generated in the area. Property uses can be limited to those that attract very few people, excluding those that would generate significant volumes of traffic during hours of peak movement. Zoning regulations can require off-street parking provisions as a condition for permit approval.

Driveway controls can be effective in preserving the functional character of the roadway. On arterials in built-up urban areas, it is important to establish minimum spacing requirements for driveways, as well as the minimum distance from a driveway to the nearest intersection.

An example of geometric design to control access is the use of a frontage road to provide indirect access of abutting properties to a major arterial. Also, the use of a raised concrete median strip in the center of the road can effectively prohibit left turns into or out of driveways.

2.10 DRIVEWAY DESIGN

2.10.1 Location

Part of the process in obtaining a driveway permit is to determine where the driveway will be located. The following guidelines may be used to establish this location.

www.EngineeringEBooksPdf.com

Wherever possible, drives should be located in accordance with the intersection sight distance criteria (see Table 2.3). Special consideration should be given to the location of drive access to high-volume traffic generators such as shopping centers and industrial plants and parks, as well as other types of development having similar traffic characteristics. These should be treated as standard intersections with appropriate spacing to the nearest intersection. A driveway serving all directions of traffic should be located a minimum of 600 ft (183 m) from the nearest major highway or street intersection. A new driveway should not be located where it will create an offset intersection opposite an existing street, highway, or major commercial driveway.

2.10.2 Rural Driveway Geometrics

Rural residential drives and field drives should normally conform to the type 1 design shown in Fig. 2.49 (Ref. 14). New drives should intersect the highway at an angle between 70 and 90°. In some cases, however, it may be necessary to retain existing drive angles that vary from these desirable angles.

If the project involves existing drives, the existing width is normally retained unless it is less than 12 ft (3.7 m). In that case, it should be widened to provide a 12-ft (3.7-m) throat width. In the case of new drives, the width should normally be 12 ft (3.7 m). If the new driveway is a combined drive between two properties, the width should normally not exceed 24 ft (7.3 m). Also, a wider field drive may be used if it will keep a farm equipment operator from encroaching on the opposing traffic lane when entering or exiting the highway.

The radius of the type 1 driveway should normally be 25 ft (7.6 m). The radius may be increased on field drives if it is deemed that the larger values will improve driveway operation and reduce the hazard to motorists and farm equipment operators.

Driveways abutting uncurbed highways may be curbed. However, the curb should not extend closer to the through pavement edge than 8 ft (2.4 m) or the treated shoulder width, whichever is greater. This is recommended to avoid curb obstruction for vehicles, snowplows, etc., using the shoulder.

2.10.3 Urban Residential Drives

Either type 1 or type 2 drives (Fig. 2.49) may be used in urban areas. If used in urban areas, the radius and flare dimensions may be reduced so that the apron does not extend past the back of the sidewalk, or past the right-of-way line if there are no sidewalks. The desirable minimum radius for type 1 drives, when the through highway is curbed, is 15 ft (4.6 m).

Three methods are shown in Fig. 2.50 for designing driveways between the curb line and sidewalk to provide for turning vehicles. Other designs may be used if they are approved for use by the local governmental agencies responsible for maintenance of the project. Additional details are shown in Fig. 2.51 when the tree lawn is less than 6 ft (1.8 m). Residential drives on curbed streets should use a dropped curb as shown in section B-B of Fig. 2.50.

2.10.4 Service Station Drives

Service station drive approach geometry is probably the most complex of any drive design. Many of the geometric features may be used in the design of other commercial

www.EngineeringEBooksPdf.com

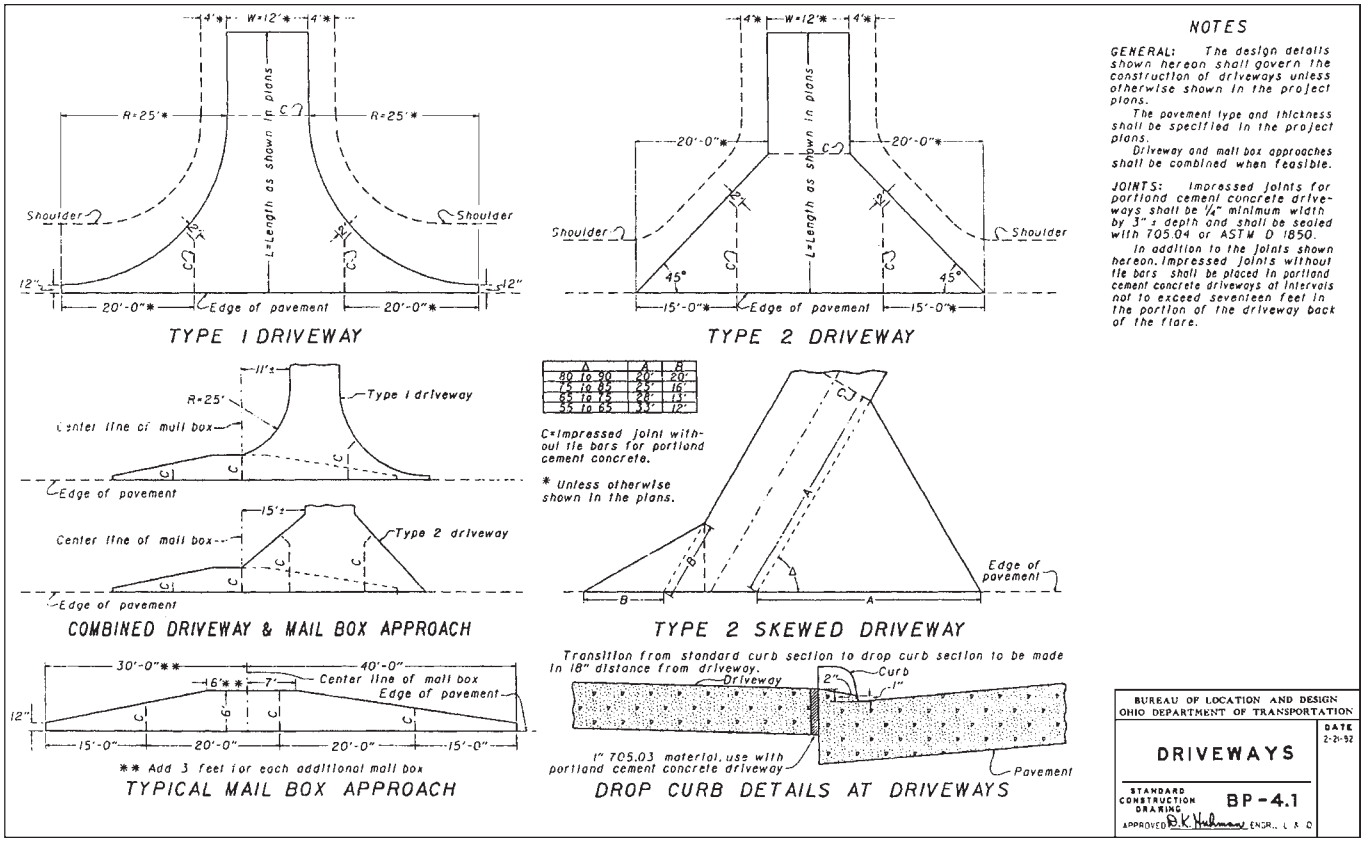

FIGURE 2.49 Driveway designs. Conversions: 1 ft = 0.305 m, 1 in = 25.4 mm. (*From* Standard Construction Drawings, *Bureau of Location and Design, Ohio Department of Transportation, with permission*)

www.EngineeringEBooksPdf.com

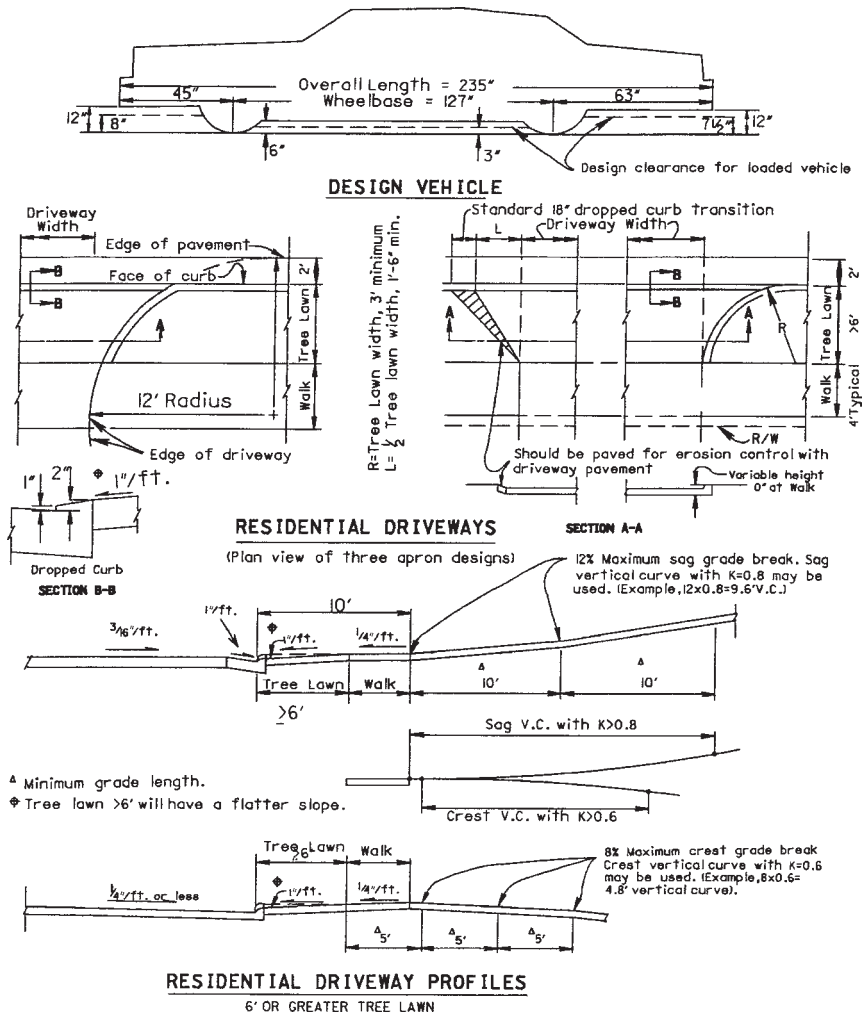

FIGURE 2.50 Details of driveway designs. Conversions: 1 ft = 0.305 m, 1 in = 25.4 mm. (*From* Location and Design Manual, *Vol. 1,* Roadway Design, *Ohio Department of Transportation, with permission*)

and industrial drives. Figures 2.52 through 2.55 illustrate service station approach designs under varying conditions.

The location and angle of an approach in relation to an adjacent highway intersection should be such that a vehicle entering or leaving the site may turn out of or into the nearest lane of traffic moving in the desired direction and be channeled within this lane before entering the intersection or proceeding along the highway. The interior angle between the axes of dual approaches and the centerline of the roadway should fall between 45 and 90°. This interior angle should fall between 70 and 90° for single approaches designed for two-way operation. The width of all approaches should not be greater than 35 ft (11 m) in the throat of the approach measured at right angles to

www.EngineeringEBooksPdf.com

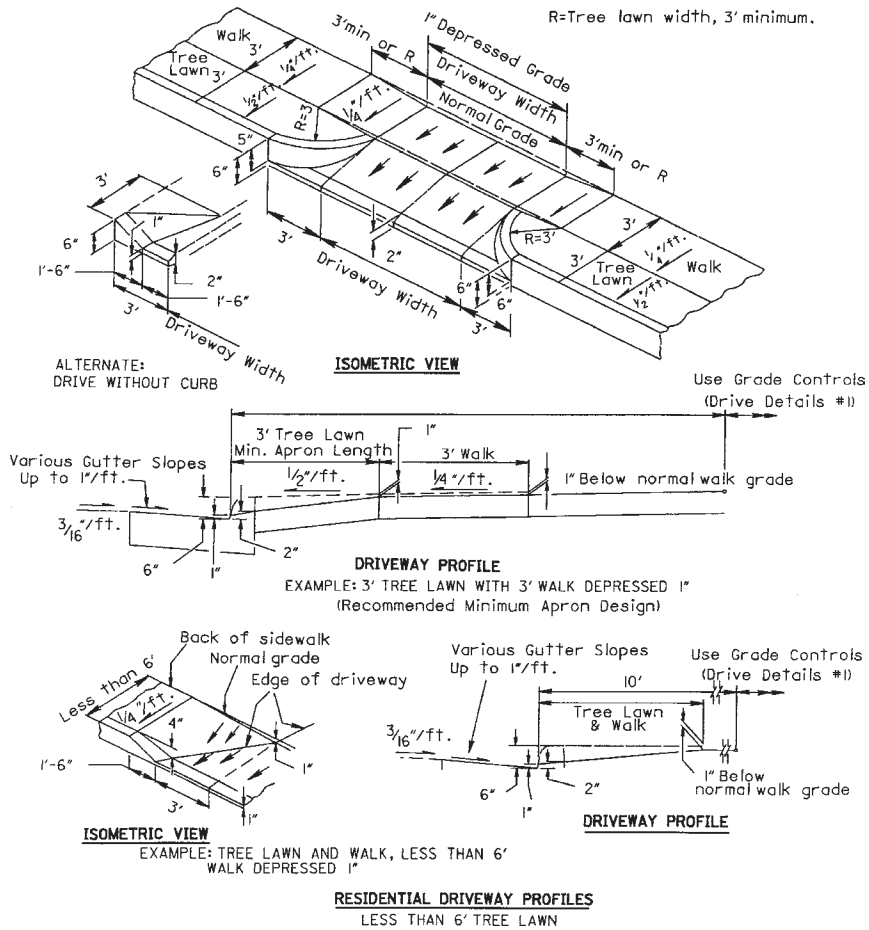

FIGURE 2.51 Additional details of driveway designs. Conversions: 1 ft = 0.305 m, 1 in = 25.4 mm. (*From* Location and Design Manual, *Vol. 1,* Roadway Design, *Ohio Department of Transportation, with permission*)

the axis of the approach. Where public alleys adjoin the service station property, approaches may begin at the far side of the alley, and if so used, the width of the alley should be included as part of the approach opening.

Approach radii on uncurbed highways should be as follows:

Turning radii: 15 ft (4.6 m) minimum, 25 to 50 ft (7.6 to 15.2 m) desirable

Nonturning radii: 5 ft (1.5 m) minimum, 10 ft (3.0 m) maximum

Approach radii on curbed highways should be as follows:

Turning radii: 3 ft (0.91 m) minimum, 15 to 25 ft (4.6 to 7.6 m) desirable

Nonturning radii: 3 ft (0.91 m) minimum, 5 ft (1.5 m) maximum

www.EngineeringEBooksPdf.com

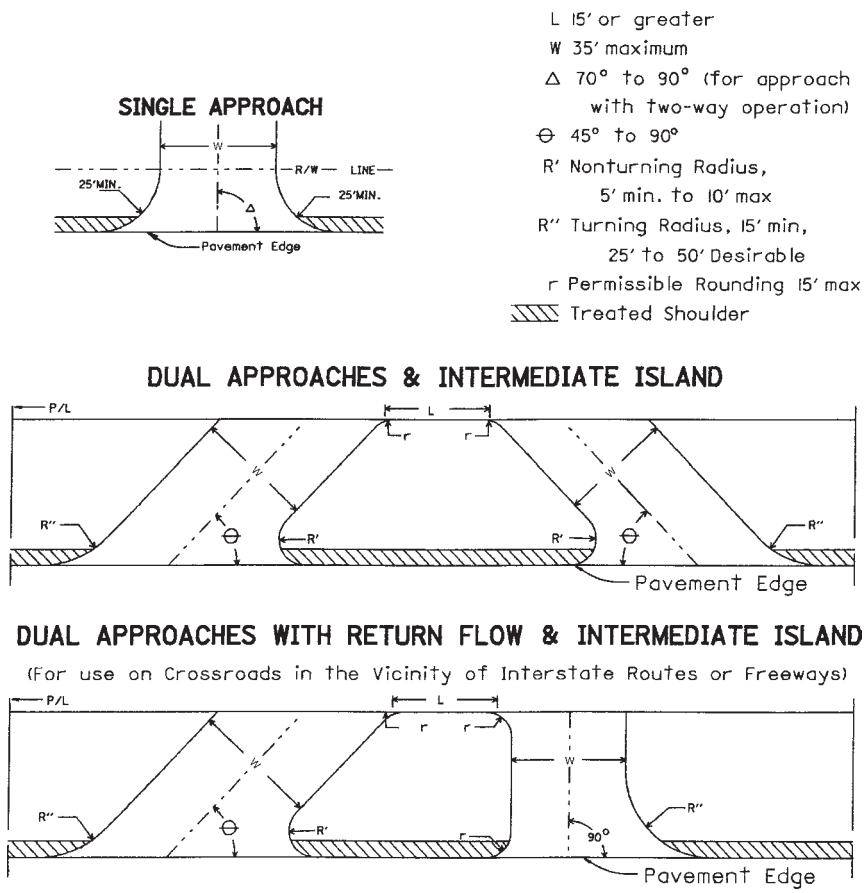

FIGURE 2.52 Design for service station drives with uncurbed roadway and uncurbed approach. Conversion: 1 ft = 0.305 m. (*From* Location and Design Manual, *Vol. 1,* Roadway Design, *Ohio Department of Transportation, with permission*)

Where the approach radius controls the turning radius of a right-turning vehicle entering the service station from the adjacent traffic lane of the roadway, the radius of that edge should be as long as practical to provide a free and safe movement.

2.10.5 Commercial Drives

The access requirements of most commercial developments can be served by driveways having standard design characteristics. The exceptions are driveways having high traffic volumes, those being used by large vehicles, or those serving businesses that engender unique traffic patterns. For standard commercial drive designs, see Fig. 2.56. The recommended radii are (1) 15 ft (4.6 m) minimum, when the through highway is curbed, and (2) 25 ft (7.6 m) minimum, when the through highway is uncurbed. The maximum width is 35 ft (11 m). A dropped curb should be used on curbed streets as shown in section B-B in Fig. 2.50.

www.EngineeringEBooksPdf.com

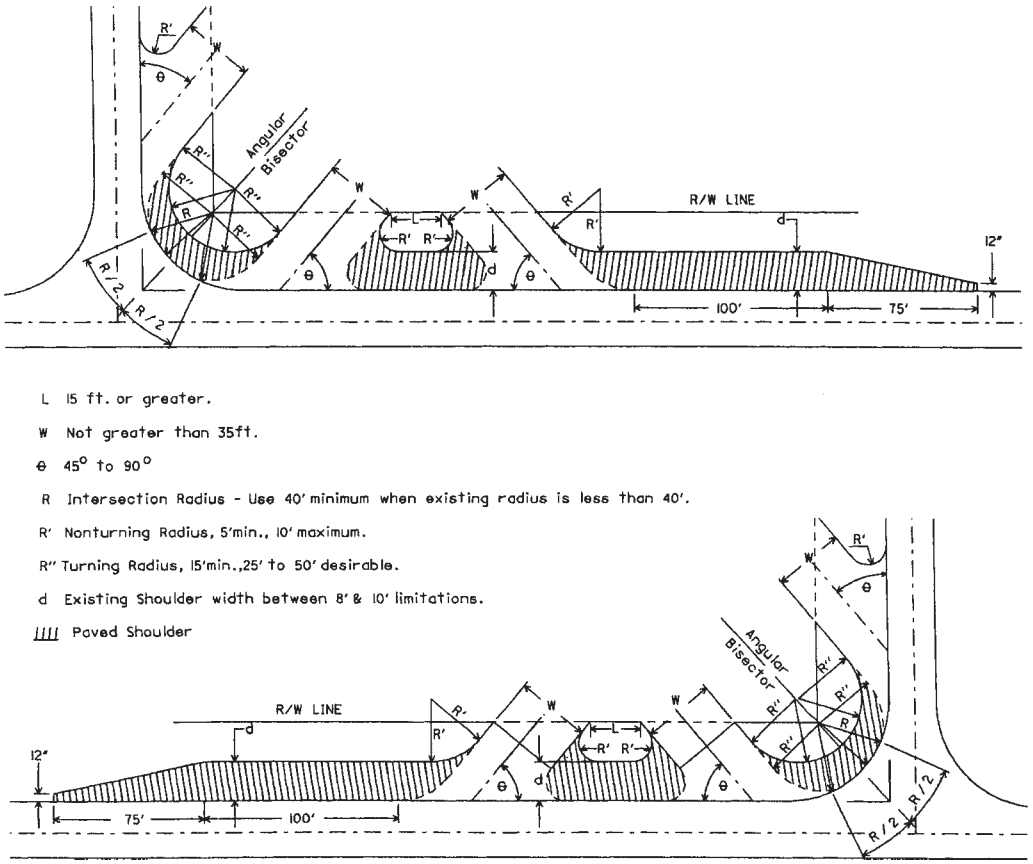

FIGURE 2.53 Design for service station drives with special paved shoulder detail. Conversions: 1 ft = 0.305 m, 1 in = 25.4 mm. (*From* Location and Design Manual, *Vol. 1,* Roadway Design, *Ohio Department of Transportation, with permission*)

www.EngineeringEBooksPdf.com

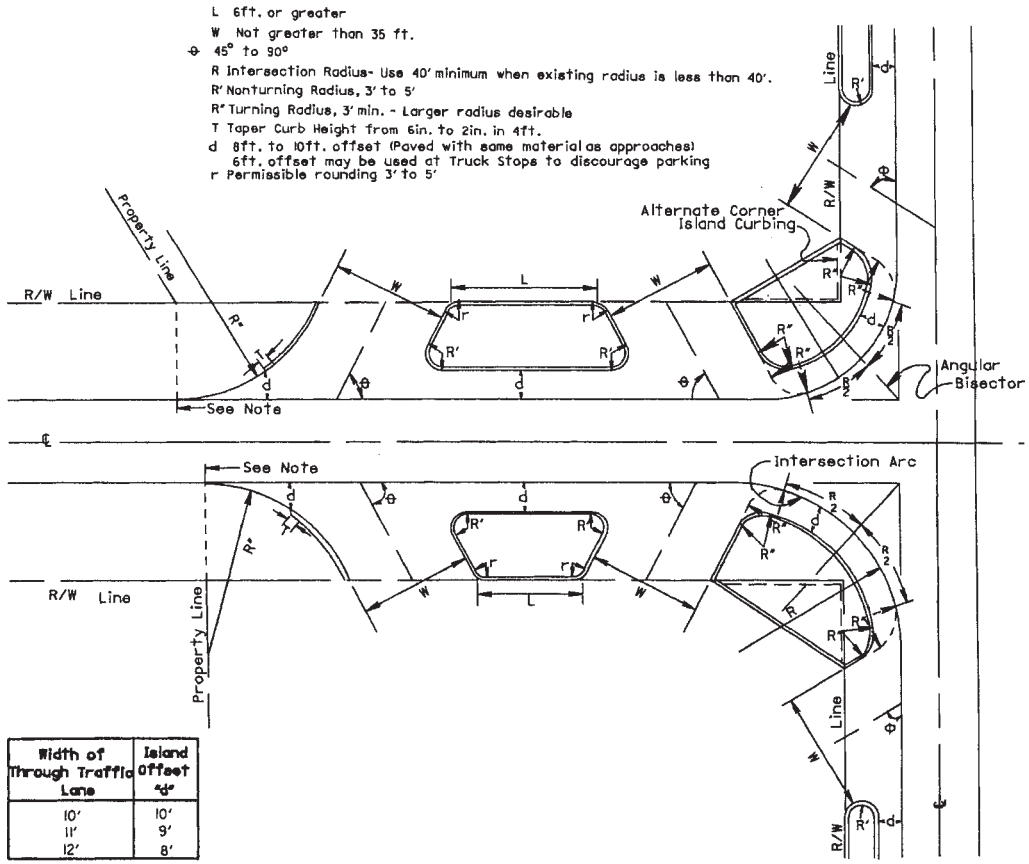

Width of Through Traffic Lane	Island Offset "d"
10'	10'
11'	9'
12'	8'

FIGURE 2.54 Design for service station drives with uncurbed roadway and curbed approach. Conversions: 1 ft = 0.305 m, 1 in = 25.4 mm. (*From* Location and Design Manual, *Vol. 1,* Roadway Design, *Ohio Department of Transportation, with permission*)

www.EngineeringEBooksPdf.com

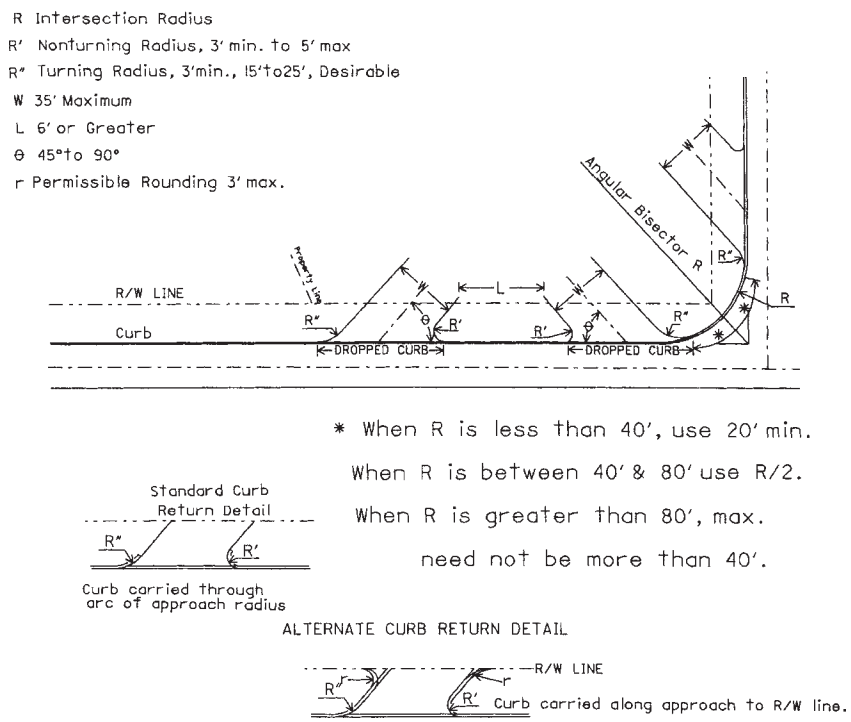

FIGURE 2.55 Design for service station drives with curbed roadway and curbed approach. Conversion: 1 ft = 0.305 m. (*From* Location and Design Manual, *Vol. 1,* Roadway Design, *Ohio Department of Transportation, with permission*)

Where access requirements are such that a nonstandard driveway is necessary, the design may approximate the design of shopping center driveways, to be discussed in Art. 2.10.6, or that of a public road intersection. Specially designed radii and a width greater than 35 ft (11 m) may be permitted, as necessary, to accommodate the type of vehicle using the driveway. For example, a truck stop may require two one-way driveways, or a single drive with width greater than 35 ft (11 m), and radii as great as 75 ft (23 m) to facilitate turning movements. See Ref. 12.

2.10.6 Shopping Center and Industrial Drives

Figure 2.57 shows two typical driveway designs to be used as a guide for the design of driveways serving high-volume traffic generators such as shopping centers, industrial plants, industrial parks, and other types of developments having similar traffic characteristics. Many of the design features discussed in Art. 2.4.1, At-Grade Intersections, are applicable here. Geometric considerations are as follows:

- Driveways should intersect the highway at an angle between 70 and 90°.
- Each driveway traffic lane should have a minimum width of 10 ft (3.0 m), with 12 ft (3.7 m) preferred.

www.EngineeringEBooksPdf.com

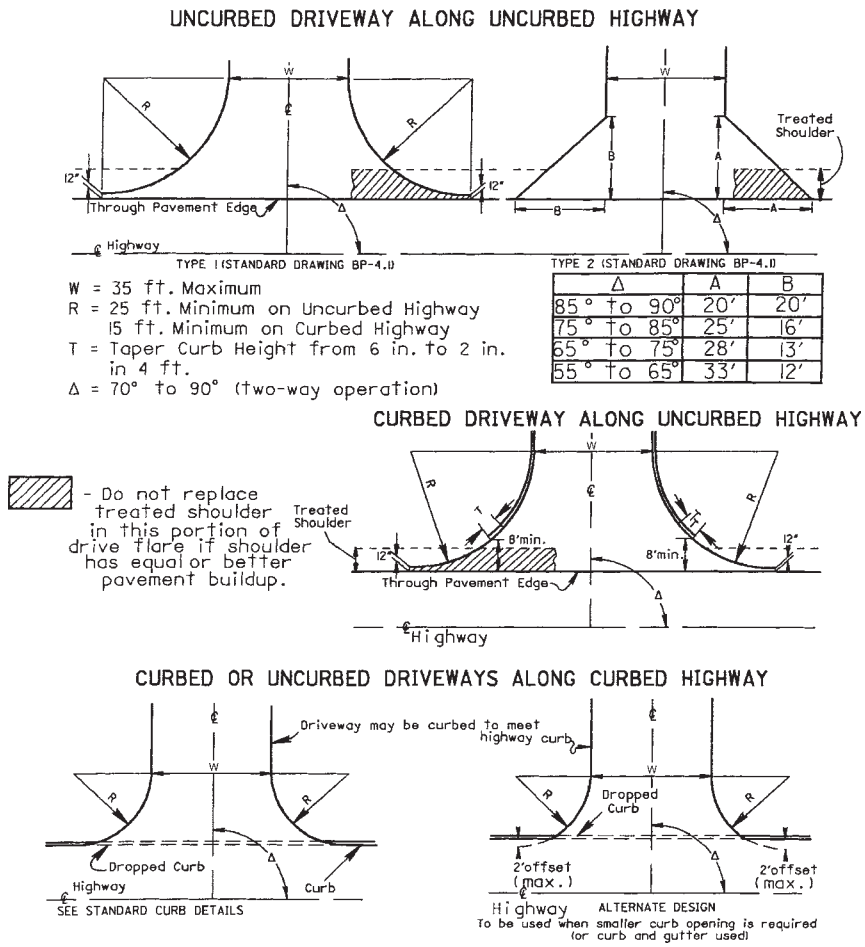

Δ	A	B
85° to 90°	20′	20′
75° to 85°	25′	16′
65° to 75°	28′	13′
55° to 65°	33′	12′

FIGURE 2.56 Designs for commercial drives. Conversions: 1 ft = 0.305 m, 1 in = 25.4 mm. (*From* Location and Design Manual, *Vol. 1,* Roadway Design, *Ohio Department of Transportation, with permission*)

- Major driveways in shopping centers should be constructed to prevent cross movement of internal traffic within 100 ft (30 m) of the entrance approach. This may be accomplished by use of a raised divider 6 in (150 mm) high, 6 ft (1.8 m) wide (minimum), and 100 ft (30 m) long, and/or by use of curbing, sidewalk, or other barrier along the drive edges for a length of 100 ft (30 m).
- Driveways designed for traffic signal operation should have curbed radii and should provide a minimum of two lanes for vehicles entering the highway.

2.10.7 Drive Profile Design

Drive profiles on uncurbed roadways should slope down and away from the pavement edge at the same slope as the graded shoulder. Any vertical curve should be developed

www.EngineeringEBooksPdf.com

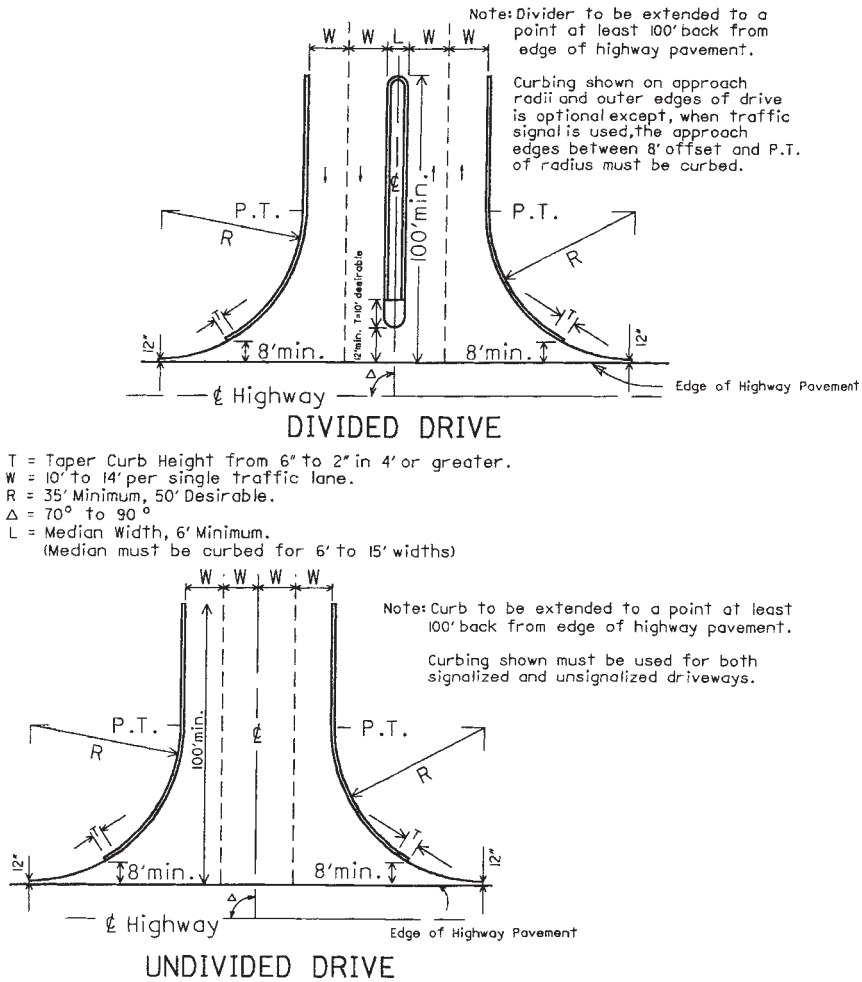

FIGURE 2.57 Designs for shopping center and industrial drives. Conversions: 1 ft = 0.305 m, 1 in = 25.4 mm. (*From* Location and Design Manual, *Vol. 1,* Roadway Design, *Ohio Department of Transportation, with permission*)

outside the normal graded shoulder width. Vertical curve lengths should be 10 to 20 ft (3.0 to 6.1 m), depending on the grade differential. Under normal circumstances, rural drive grades should not exceed 10 percent, with 8 percent the preferred maximum.

The drive profiles for curbed roadways were developed using the design vehicle described in Fig. 2.50. The profile criterion shown provides clearance for this vehicle when its springs are completely compressed. If conditions of a particular driveway do not meet the cross-section criteria listed below, a template of the design vehicle can be used to design the driveway profile.

For tree lawns 6 ft (1.8 m) or wider, the ramp grade from the gutter to the edge of the sidewalk should be 1 in/ft (8.3%) or less for normal cross-section design. Figure 2.50 shows this condition for the following cross-section conditions:

www.EngineeringEBooksPdf.com

- Sidewalk and tree lawn slope of ¼ in/ft (2.1%)

and

- A 6-in (150-mm) curb height with pavement slope of 3/16 or ¼ in/ft (1.6 or 2.1%)

or

- Type 2 curb and gutter with pavement slope of 3/16 in/ft (1.6%)

If the cross-section design does not meet the above conditions (has sharper grade breaks), the profile should be designed using a template of the design vehicle.

For tree lawns less than 6 ft (1.8 m) wide, Fig. 2.51 shows the profile treatment. Clearance for the design vehicle is achieved by depressing the sidewalk 1 in (25.4 mm) at the driveway. The sidewalk cross slope of ¼ in/ft (2.1%) is retained. The design may be used directly with curbed highways having cross-section criteria as listed above and the profile conditions of Fig. 2.50. For other cross sections, a template of the design vehicle may be used to design the profile.

Figure 2.51 shows an isometric view and profile for a driveway where only a 3-ft (0.9-m) tree lawn is available. This design is shown not because it is desirable, but because right-of-way width and property development may require this type of design. Whenever feasible, the tree lawn should be 8 ft (2.4 m) or wider. Where the total width of tree lawn and sidewalk is less than 6 ft (1.8 m), the minimum 3-ft (0.9-m) apron designs are inappropriate and cannot be used, as they extend curb or sharp flares into the sidewalk area. For this condition, the sidewalk and curb are transitioned to meet the drive profile as shown on the lower portion of Fig. 2.51. The profile of the drive meets the 1-in (25.4-mm) depressed grade of the sidewalk, as shown in the drive profile.

The tree lawn and walk design shown in Figs. 2.50 and 2.51 will keep storm water, flowing at the curb design height or less, from flowing over the sidewalk. If it is necessary to lower the curb and sidewalk more than 1 in (25 mm), the drainage condition should be checked thoroughly.

Commercial drive profiles usually use a dropped curb across the approach. However, some commercial drives serving large traffic generators may be designed as at-grade intersections, without dropped curbs, because of their high traffic volumes.

Figure 2.58 shows the recommended grade controls for commercial driveways. The grade should be as flat as possible and still meet drainage requirements. The 20-ft

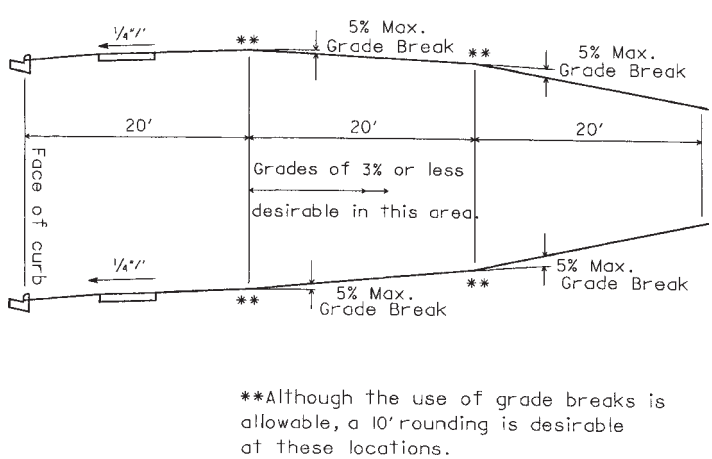

FIGURE 2.58 Profiles for commercial drives. Conversions: 1 ft = 0.305 m, 1/4 in/ft = 21 mm/m. (*From* Location and Design Manual, *Vol. 1,* Roadway Design, *Ohio Department of Transportation, with permission*)

www.EngineeringEBooksPdf.com

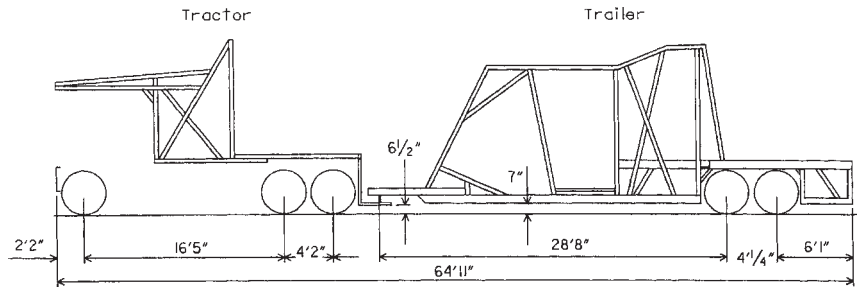

FIGURE 2.59 Commercial design vehicle showing wheel spacings and clearances. Conversions: 1 ft = 0.305 m, 1 in = 25.4 mm. (*From* Location and Design Manual, *Vol. 1,* Roadway Design, *Ohio Department of Transportation, with permission*)

(6.1-m) length between grade breaks is required by the low clearance and the long axle spacing of the commercial design vehicle shown in Fig. 2.59. Tree lawn profile design should be in accordance with Figs. 2.50 and 2.51. The grade break at the face of the curb is critical for some commercial vehicles, and the cross-section requirements for residential drives on curbed streets should be used.

2.11 THE COST OF CONGESTION

Congestion, when applied to traffic, refers to that condition which occurs when drivers experience a noticeable delay in completing a trip because of inability to maneuver through the traffic stream. This condition is characterized by slow travel speeds, increased travel times, increased accident frequencies, erratic stop-and-go driving, increased vehicle operating costs, and other undesirable circumstances leading to driver dissatisfaction (Ref. 4).

Congestion on urban freeways is of two types—recurring and nonrecurring. Congestion that occurs regularly at particular locations during certain time periods is said to be recurring. On the other hand, congestion that occurs as a result of irregular events, such as accidents, disabled vehicles, or other similar happenings, is said to be nonrecurring. Both can cause driver dissatisfaction, but drivers usually expect the recurring congestion and make adjustments in their travel plans to accommodate it. The most common example of recurring congestion is the morning and afternoon "rush hour" periods, when traffic demands can exceed the capacity of the freeway.

Figure 2.60 shows a graph illustrating what happens when demand exceeds capacity. The straight line represents the capacity of a section of freeway at a particular time (i.e., the number of vehicles getting past the point under prevailing roadway conditions). As long as traffic demand, or the number of vehicles arriving at that point (shown by the curved cumulative demand line), is less than or equal to the capacity of that section of the freeway, there is little congestion. However, once the arrival rate begins to exceed the capacity at time T_a, a bottleneck is formed and vehicles begin to accumulate upstream until time T_b, when the demand once again falls below the capacity. Congested conditions continue until time T_c, when the accumulated traffic at the bottleneck dissipates. The area between the capacity and demand curves during congested conditions is the delay resulting from the congestion (Ref. 4).

www.EngineeringEBooksPdf.com

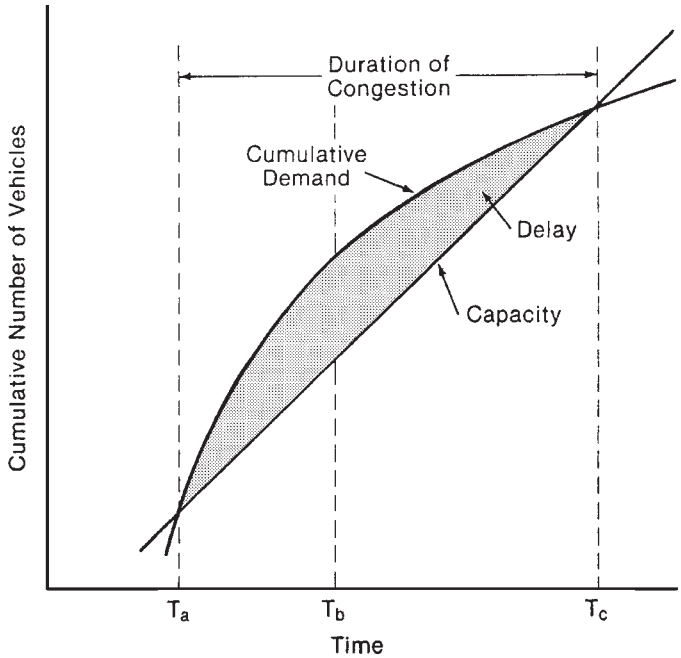

FIGURE 2.60 Illustration of relationships among demand, capacity, and congestion. (*From* Traffic Engineering Handbook, *Institute of Transportation Engineers, 1992*)

The cost of congestion is the sum of individual costs of items that represent an increase over normal operating costs directly attributable to the congestion. Among these items are fuel and oil consumption, tire wear caused by the frequency and severity of speed changes, other maintenance items affected by the speed changes, and increased idling times. There are other costs that may not be readily apparent to the individual driver but are real costs affecting the general public, such as inefficient movement of commercial vehicles and the increased level of pollutant emissions.

Where congestion on freeways is of the recurring kind, the usual solutions to try and solve the problem are geometric in nature. The most logical solution in many cases is lane addition. In urban areas, congestion frequently occurs downstream from entrance ramps when the combination of traffic entering the freeway and the traffic already present exceeds the capacity of that segment. In other cases, the existing horizontal alignment may contain one or more "sharp" curves, which result in lower capacity. Ramp designs may have a detrimental effect on freeway capacity if their merge or diverge areas are too short, or if they are too closely spaced, creating weaving problems for traffic entering and exiting the freeway traffic stream. Other problems involving physical features include unconventional interchanges, inadequate shoulders, narrow medians, poor surface quality, and poor signing.

The next article discusses a new approach to the problem that takes advantage of evolving technology: intelligent vehicle highway systems.

www.EngineeringEBooksPdf.com

2.12 INTELLIGENT VEHICLE HIGHWAY SYSTEMS

Intelligent vehicle highway systems (*IVHS*) refers to transportation systems that involve integrated applications of advanced surveillance, communications, computer, display, and control process technologies, both in the vehicle and on the highway (Ref. 5).

In 1991, Congress passed the Intermodal Surface Transportation Efficiency Act (ISTEA), which included an authorization of $660 million to create an IVHS program for the nation. The goals for IVHS were defined as follows: to improve safety, to reduce congestion, to enhance mobility, to minimize environmental impact, to save energy, and to promote economic productivity. Research studies and demonstration projects to accomplish these goals are in progress. Funding has continued under subsequent legislation and experimental "smart highways" are being constructed.

The IVHS program is not limited to urban areas. It should result in benefits for both urban and rural drivers, and for both younger and older drivers. People who use public transportation will also benefit, and others will be persuaded to join them.

A planning process was undertaken following the adoption of the act, which identified 28 user services in six categories (Ref. 5):

Travel and traffic management
- Pretrip travel information
- En route driver information
- Traveler services information
- Route guidance
- Ride matching and reservation
- Incident management
- Travel demand management
- Traffic control

Public transportation management
- En route transit information
- Public transportation management
- Personalized public transit
- Public safety security

Electronic payment
- Electronic payment services

Commercial vehicle operations
- Commercial vehicle electronic clearance
- Automated roadside safety inspection
- Commercial vehicle administrative processes
- Onboard safety monitoring
- Commercial fleet management
- Hazardous material incident notification

Emergency management
- Emergency vehicle management
- Emergency notification and personal security

Advanced vehicle safety systems
- Longitudinal collision avoidance
- Lateral collision avoidance

www.EngineeringEBooksPdf.com

- Intersection collision avoidance
- Vision enhancement for crash avoidance
- Safety readiness
- Precrash restraint deployment
- Automated vehicle operation

For those services listed under *travel and traffic management*, the emphasis will be upon providing real-time data to help the driver make the best decisions during a trip or even make last-minute changes in itinerary prior to departure. This category also encourages the use of high-occupancy vehicles and provides traffic control procedures and mechanisms to deal with situations as they occur.

The services under *public transportation management* will improve the efficiency, safety, and effectiveness of public transportation systems for users and providers alike. Again, the emphasis is on gathering and relaying real-time information to the users of the systems. It provides for automation of operations, planning, and management functions of public systems. It will also be able to monitor the environment in public station areas, including bus stops and parking lots, to generate alarms when necessary and increase public safety.

Electronic payment services will promote intermodal travel by providing a common electronic payment medium for all transportation modes and functions, including tolls, transit fares, and parking. One "smart card" could be used for several different modes of transportation.

Under *commercial vehicle operations*, trucks and buses equipped with transponders could have their safety status, credentials, and weight checked at mainline speeds. Vehicles passing the check would not have to pull over into the inspection/weigh facility. Automated safety inspections would allow "real-time" access at the roadside to the performance record of carriers, vehicles, and drivers. By using sensors and diagnostic equipment, vehicle systems and even driver alertness can be checked without stopping the vehicle.

Under *emergency management*, the capabilities of fleet management, route guidance, and signal priority can be used for emergency vehicles. Police, fire, and medical units can be directed over the most expeditious route to an incident site using real-time information. Driver and personal security systems will allow the user to initiate distress signals for incidents like mechanical breakdowns. Automatic collision notification would send information regarding location, nature, and severity of the incident to emergency personnel.

Concerning those services under *advanced vehicle safety systems*, a series of collision avoidance systems would be developed. For potential longitudinal, lateral, and intersection collisions, the systems would be able to sense impending trouble, warn the driver, and temporarily control the vehicle. On attempted lane changes, the driver's blind spot would be monitored, and the vehicle prevented from making the switch if a vehicle was present. Another possibility is vision enhancement for the driver, in which the roadway and roadside are continuously scanned for potential hazards and the driver is made aware of situations when necessary. In-vehicle equipment can be used to monitor the driver's condition and issue appropriate warnings. In employing precrash restraint deployment, the velocity, mass, and direction of the vehicles and objects involved in a potential crash are identified and the number, location, and physical characteristics of occupants are determined. This information in turn is used to trigger responses, such as tightening of lap-shoulder belts, arming and deploying air bags at optimal pressure, and deploying roll bars. Another program being investigated is automated vehicle operation. This would ultimately provide an accident-free environment on the roadway. Drivers would be able to buy a vehicle already equipped to drive under these conditions, or purchase instrumentation and have it installed on an existing vehicle.

www.EngineeringEBooksPdf.com

2.13 HIGH-OCCUPANCY VEHICLE LANES

Another method that is being increasingly used to relieve congestion on urban freeways is the establishment of *high-occupancy vehicle* (*HOV*) lanes. Although the first instances of use in California in the early 1970s met with much public resistance, the idea was revisited and accepted more readily during the mid-1980s and continues to grow in acceptance in highly congested urban traffic areas (Ref. 9). The concept is to provide a separate lane or lanes for high-occupancy vehicles such as buses, carpools, vanpools, and other ride-sharing modes of transportation. This, in turn, provides a positive incentive for the general public to seek out ride-sharing transportation modes, both public and private. The overall goal is to move more people in fewer vehicles.

2.13.1 Planning Considerations

The following transportation system goals can be achieved by proper development and use of HOV lanes (Ref. 3):

- To maximize the person-moving capacity of roadway facilities by providing improved level of service for high-occupancy vehicles, both public and private
- To conserve fuel and to minimize consumption of other resources needed for transportation
- To improve air quality
- To increase overall accessibility while reducing vehicular congestion

Designing and implementing HOV lanes should be limited to those cases where extreme congestion occurs on a regular basis. They should be used in conjunction with other programs that will promote the use of ride-sharing modes, such as park-and-ride lots, park-and-pool lots, and information services to facilitate bus and ride-share needs.

The following guidelines should be used to determine when an HOV lane should be implemented:

- Compatibility with other plans

  HOV lanes should be part of an overall transportation plan.

  Community support should be obtained for developing HOV lanes.

  Intense, recurring congestion should be occurring on the freeway general-purpose lanes.

  Peak-period traffic per lane should be approaching capacity (1700 to 2000 vehicles per hour).

  During peak periods, average speeds on the freeway main lanes during nonincident conditions should be less than 30 mi/h (48 km/h) over a distance of about 5 mi (8 km) or more.

  Compared with using the freeway general-purpose lanes, the HOV lanes should offer a travel time savings of at least 5 to 7 min during the peak hour.

- Coordination with travel patterns that encourage ridesharing

  Significant volume of peak-period trips (e.g., more than 6000 home-based work trips during the peak hour) on the freeway should be destined to major activity centers or employment areas in or along the freeway corridor.

www.EngineeringEBooksPdf.com

At least 65 to 75 percent of peak-period freeway trips to major activity centers should be 5 mi (8 km) or more in length.

Resulting ride-share demand should be sufficient to generate HOV volumes that are high enough to make the facility appear to be adequately utilized; volumes may vary by type and location of facility.

- A design that allows for safe, efficient, and enforceable operation

2.13.2 Operational Considerations

Management of HOV facility operations may be accomplished by a range of technological and personnel means. Minimum control may consist of passive signing and delineation. Maximum control may involve sophisticated surveillance, vehicle detection with computer integration, and dynamic, real-time signing or delineation.

A determination of the level of vehicle restriction must be made on the basis of traffic characteristics and how much the HOV lane is used. Restricting use of the HOV lane to vehicles with three or more passengers (3+) may give the appearance that the lane is underused. On the other hand, restricting the lane to vehicles with only two or more passengers (2+) sometimes results in lane utilization approaching capacity. The best rule of thumb is to start with the 2+ restriction, and go to the 3+ restriction when the level of service of the HOV lane is approaching capacity.

A proper level of enforcement is necessary to ensure that the HOV lane will operate efficiently. Absence of enforcement defeats the purpose of the lane, since single-passenger vehicles will see no need to stay out of the lane. Detection and apprehension of violators, issuance of citations to violators, and effective prosecution of violators are essential.

The hours of operation that an HOV lane is in effect are also an important consideration. Twenty-four-hour operation is preferred over peak-hour operation, simply because there is less chance for driver confusion and violations tend to be lower.

2.13.3 Freeway Design Considerations

There are three types of HOV lane patterns—separated lanes, concurrent flow lanes, and contraflow lanes. Regardless of which pattern is chosen, consideration should be given to traffic operations at interchanges and on-ramps, pedestrian access to on-line stations, the availability of parking areas at or near the stations, and the possible use of HOV lanes during freeway maintenance of traffic operations. Design speeds should generally be the same as for the mainline facility. Recommended lane and shoulder widths can be seen in the next group of referenced figures (Figs. 2.61 through 2.66).

A separated HOV lane may be located in the median or on the outside of the general lanes, or follow an independent alignment. See Figs. 2.61, 2.62, and 2.63 for examples of cross sections. Figures 2.64 and 2.65 show two examples of how separated HOV lanes tie in with the general main lanes of travel. Figure 2.66 shows sample signing and pavement marking used in connection with HOV lanes. Note the diamond symbol that signifies an HOV lane.

Concurrent flow lanes are located adjacent to traffic lanes and are not physically separated from them. Figures 2.67 and 2.68 are examples of typical sections for concurrent HOV lanes.

www.EngineeringEBooksPdf.com

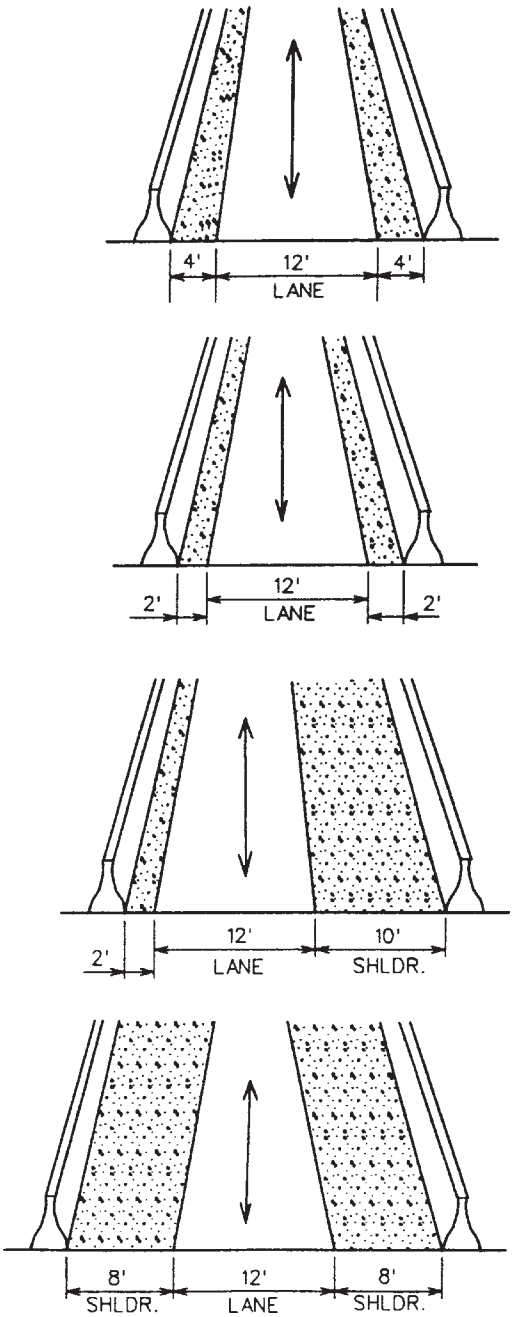

FIGURE 2.61 Cross sections for high-occupancy–vehicle single lane on separated roadway; one-way or reversible. Conversion: 1 ft = 0.305 m. (*From* Guide for the Design of High Occupancy Vehicle Facilities, *American Association of State Highway and Transportation Officials, Washington, D.C., 1992, with permission*)

www.EngineeringEBooksPdf.com

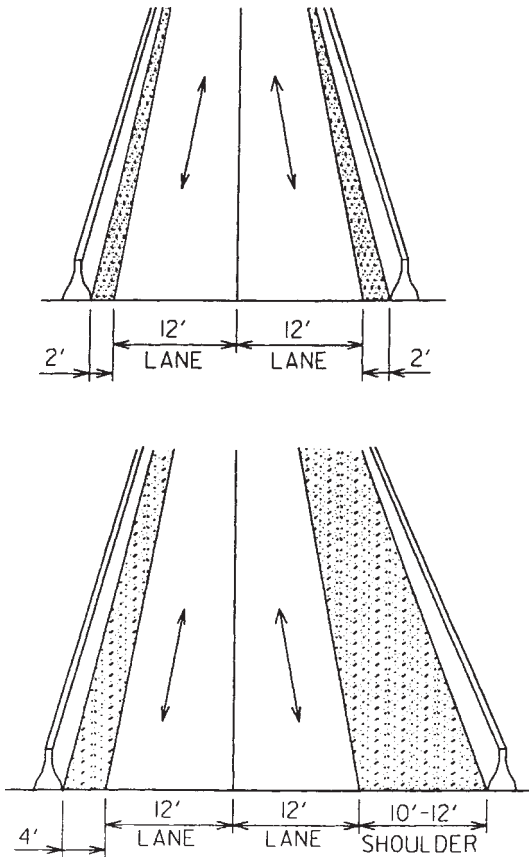

FIGURE 2.62 Cross sections for high-occupancy–vehicle double lanes on separated roadway; one-way or reversible. Conversion: 1 ft = 0.305 m. (*From* Guide for the Design of High Occupancy Vehicle Facilities, *American Association of State Highway and Transportation Officials, Washington, D.C., 1992, with permission*)

Contraflow lanes provide an exclusive lane for HOVs traveling in the peak direction by removing a lane from service in the off-peak direction. These may be used in areas where traffic volumes in the off-peak directions are such that the level of service is not seriously affected. Some kind of buffer zone or device is strongly recommended for obvious safety considerations. Figure 2.69 provides examples of cross sections for contraflow HOV lanes.

2.13.4 Arterial Design Considerations

There are two general categories of HOV lanes for use on surface arterial streets: (1) those which assign exclusive use of designated lanes for HOV use and (2) those which give

www.EngineeringEBooksPdf.com

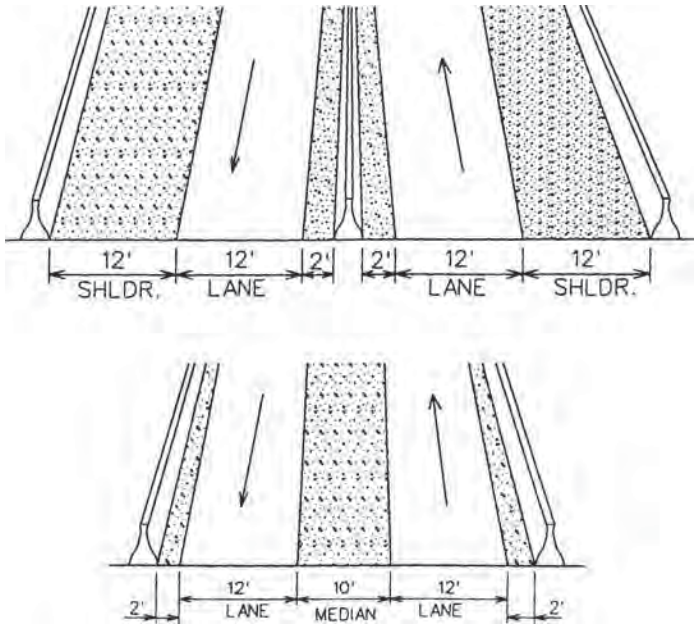

FIGURE 2.63 Cross sections for high-occupancy–vehicle two-way separated lanes on separated roadway. Conversion: 1 ft = 0.305 m. (*From* Guide for the Design of High Occupancy Vehicle Facilities, *American Association of State Highway and Transportation Officials, Washington, D.C., 1992, with permission*)

preferential treatment or special privileges to HOVs through traffic control measures. The first category includes concurrent and contraflow reserved lanes, reversible median or center lanes, and streets devoted to HOV use. The second includes such measures as traffic signal preemption systems for buses, and special traffic provisions that allow HOVs to make turns or other maneuvers that are prohibited for other traffic.

Regardless of the type of treatment, the geometric design and traffic control features should accommodate all vehicles that might ultimately use the HOV lane. Since the primary vehicle type using the urban HOV lanes will be buses, special consideration should be given to designing for the vehicle's dimensions and turning pattern.

Figure 2.70 shows two examples of center lane HOV use. Note the location of passenger loading areas in Fig. 2.70*b*. The advantage of a center HOV lane over other schemes is that it can be made reversible. Figure 2.71 shows various ways these HOV center lanes are developed.

Figure 2.72 shows the more commonly seen concurrent HOV lane developed in the curb lane of an urban street. The advantage of this type of HOV lane is that it is the simplest and least costly to implement. This usually involves only changing signs and pavement markings and coordinating traffic signals.

Contraflow HOV lanes may be used on one-way or two-way streets. On one-way streets, the HOV lane may be either the right or the left lane, while on two-way streets it can be either the right lane or the inside lane adjacent to the median or centerline of the arterial street. Two examples of contraflow lanes are shown in Fig. 2.73.

www.EngineeringEBooksPdf.com

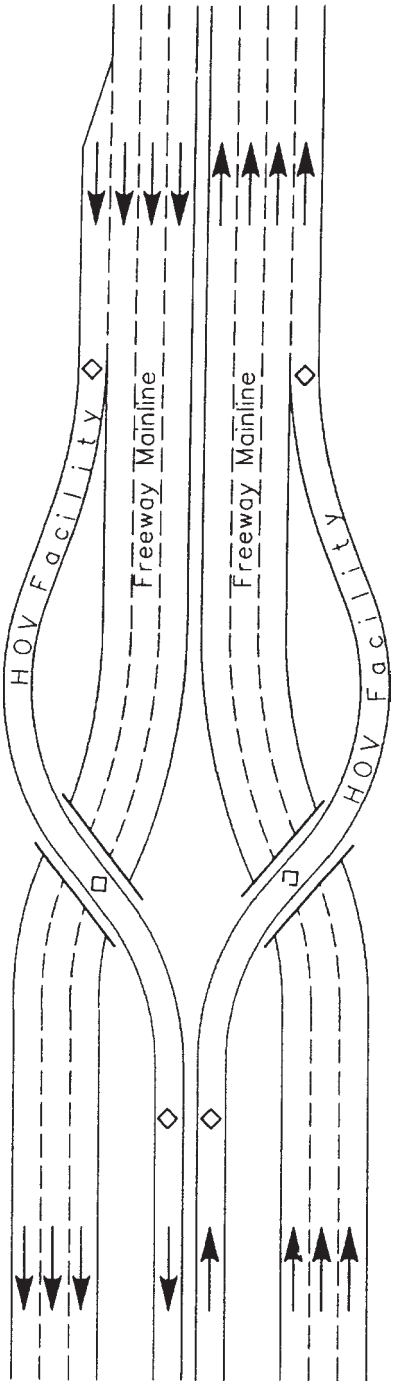

FIGURE 2.64 Connection of HOV terminal mainline lanes to freeway median with flyovers. (*From* Guide for the Design of High Occupancy Vehicle Facilities, *American Association of State Highway and Transportation Officials, Washington, D.C., 2004, with permission*)

www.EngineeringEBooksPdf.com

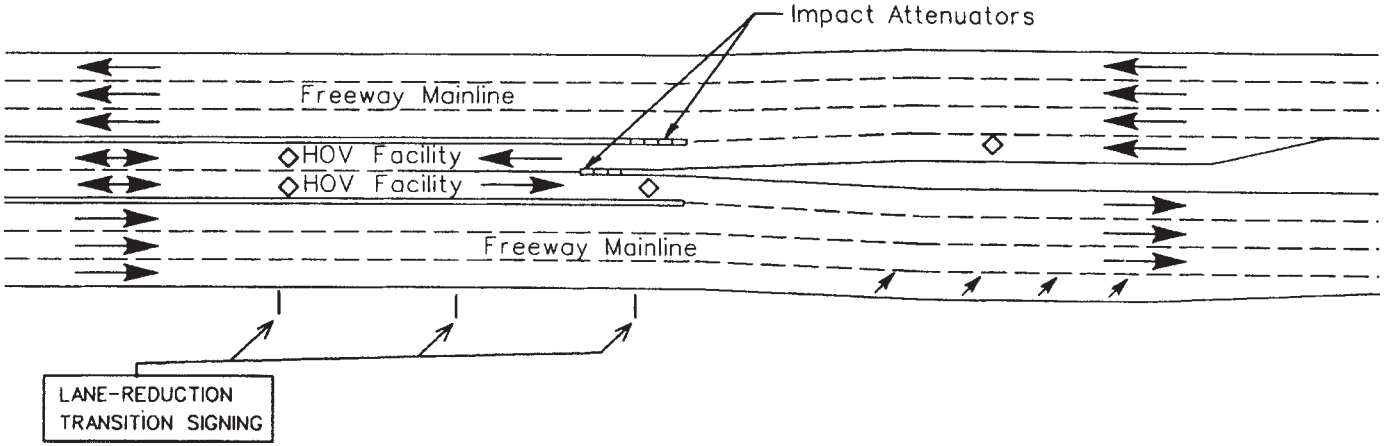

FIGURE 2.65 Connection of HOV terminal mainline lanes to freeway median with slip ramps. (*From* Guide for the Design of High Occupancy Vehicle Facilities, *American Association of State Highway and Transportation Officials, Washington, D.C., 2004, with permission*)

www.EngineeringEBooksPdf.com

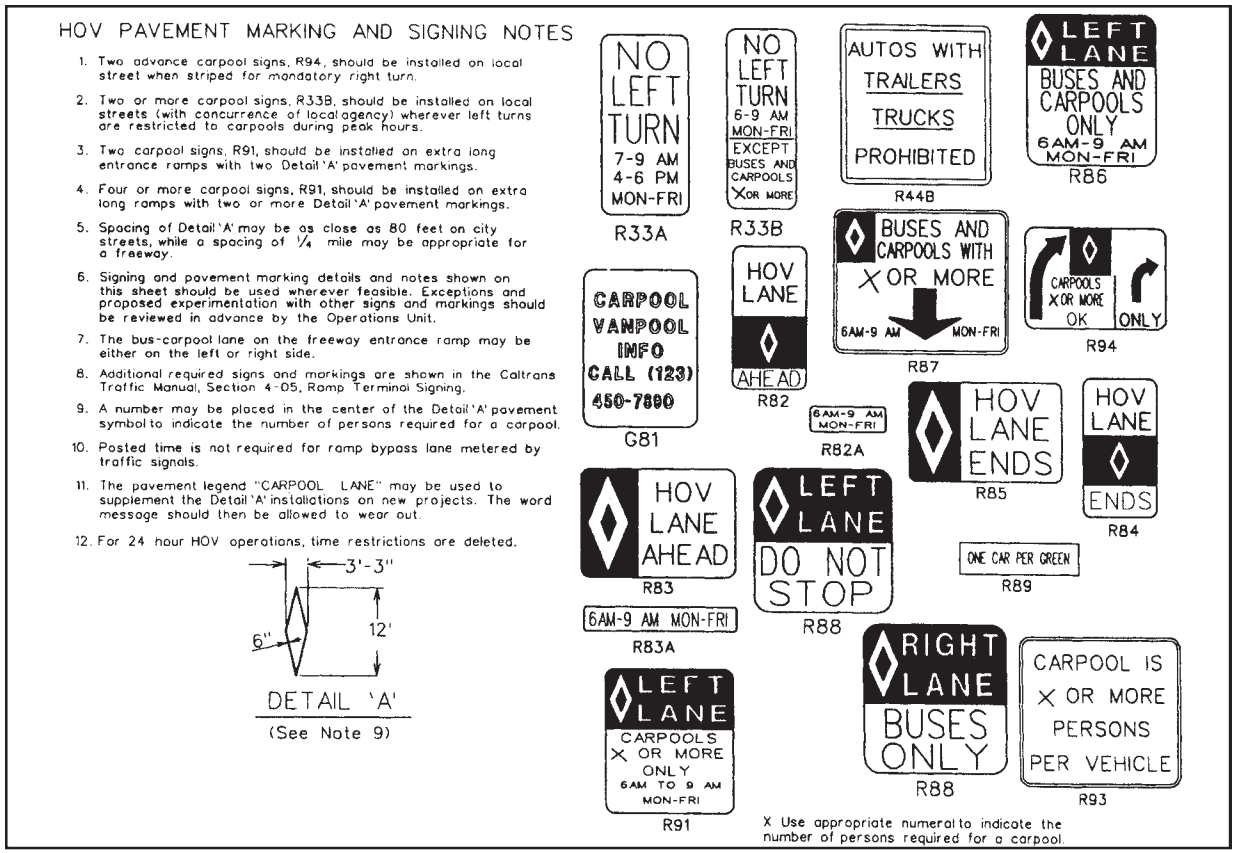

FIGURE 2.66 Sample signing and pavement markings for HOV lanes. Conversions: 1 mi = 1.6 km, 1 ft = 0.305 m, 1 in = 25.4 mm. (*From* Guide for the Design of High Occupancy Vehicle Facilities, *American Association of State Highway and Transportation Officials, Washington, D.C., 2004, with permission*)

www.EngineeringEBooksPdf.com

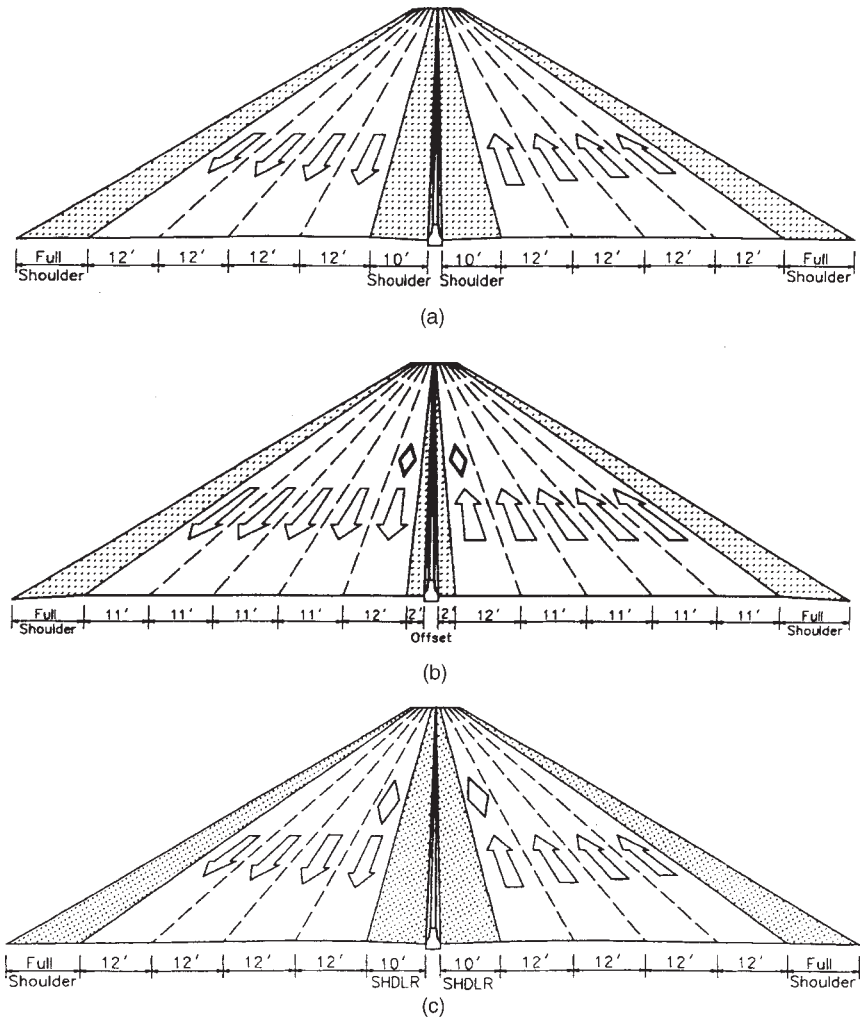

FIGURE 2.67 Contiguous concurrent HOV lanes. (*a*) Before adding HOV lanes. (*b*) After adding HOV lanes. (*c*) Alternative for HOV lanes with shoulders. Conversion: 1 ft = 0.305 m. (*From* Guide for the Design of High Occupancy Vehicle Facilities, *American Association of State Highway and Transportation Officials, Washington, D.C., 2004, with permission*)

www.EngineeringEBooksPdf.com

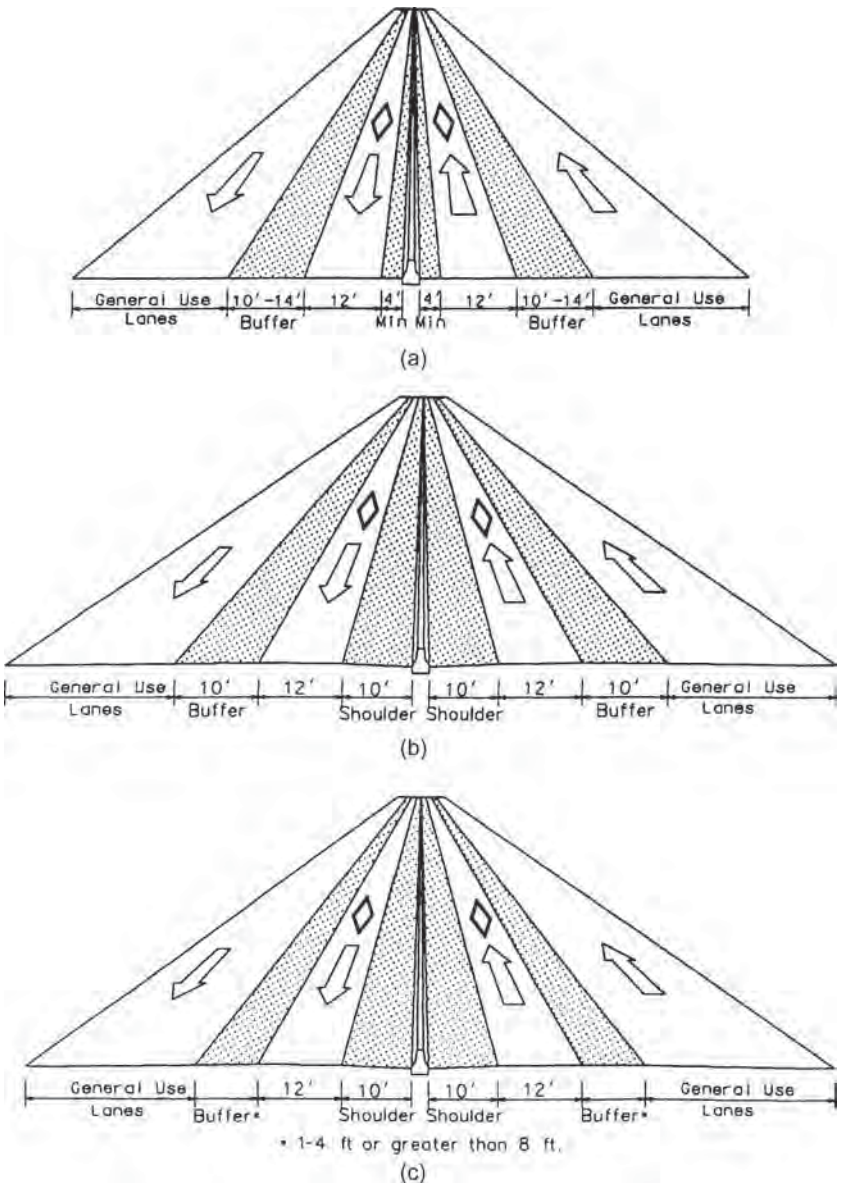

FIGURE 2.68 Examples of concurrent HOV lanes with buffer separation. (*a*) Without shoulders. (*b*) With 10-ft-wide buffers. (*c*) With other buffer widths. Conversion: 1 ft = 0.305 m. (*From* Guide for the Design of High Occupancy Vehicle Facilities, *American Association of State Highway and Transportation Officials, Washington, D.C., 2004, with permission*)

www.EngineeringEBooksPdf.com

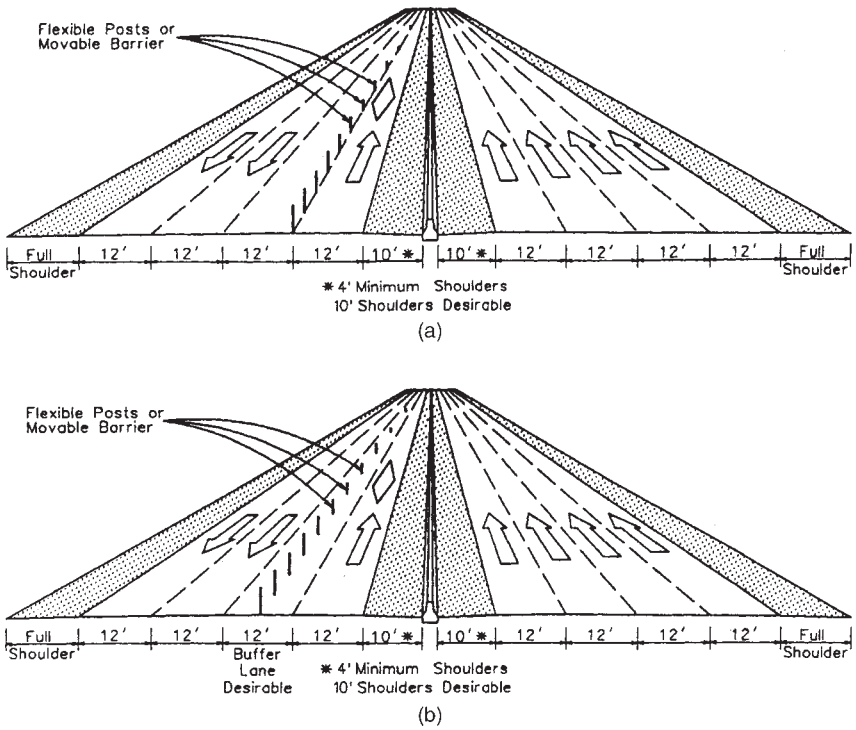

Note: Cones or flexible posts in predrilled holes may be moved toward the normal flow lanes increasing the contraflow lane width and providing an additional shoulder where a minimum inside shoulder exists. If cones are used they should be deployed with the traffic flow and removed against the traffic flow for safety. If a buffer lane design is not employed, the posts will be placed along the lane line in the gaps between the traffic stripes.

FIGURE 2.69 Examples of contraflow HOV lanes. (*a*) With posts on lane line and no buffer. (*b*) With posts in lane providing buffer. Conversion: 1 ft = 0.305 m. (*From* Guide for the Design of High Occupancy Vehicle Facilities, *American Association of State Highway and Transportation Officials, Washington, D.C., 2004, with permission*)

2.14 HIGHWAY CONSTRUCTION PLANS

2.14.1 Plan Preparation

The purpose of a set of highway construction plans is to delineate the proposed work with sufficient design details, supplemented with notes, calculations, and summary of quantities, so that it can be clearly and uniformly interpreted by engineers and contractors (Ref. 8). Sufficient data must be provided to enable the contractor to make an intelligent bid and to perform the work as intended. Clarity, completeness, and

www.EngineeringEBooksPdf.com

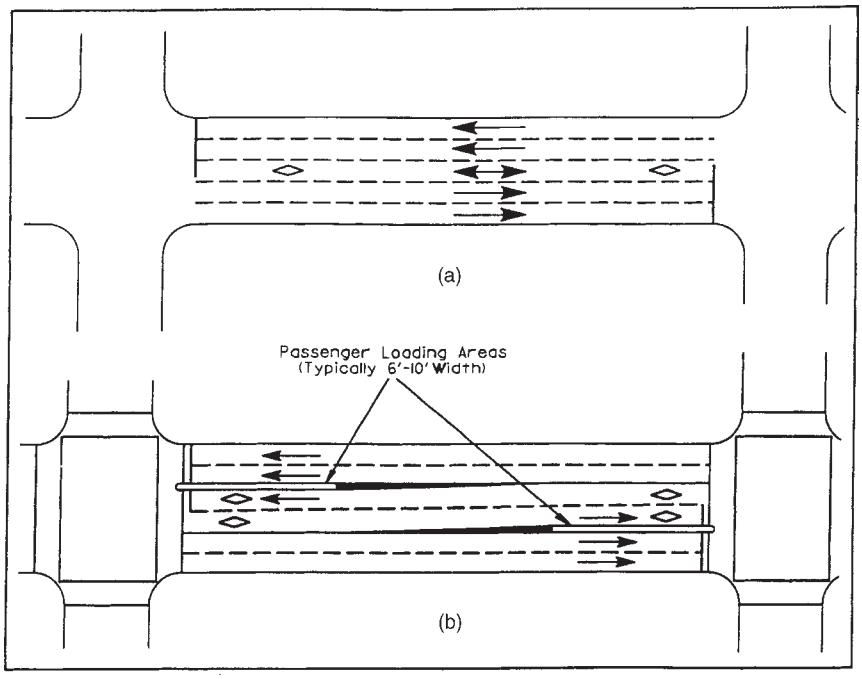

FIGURE 2.70 Examples of median HOV lanes for buses. (*a*) Reversible lanes for express buses. (*b*) Two-way lanes for local buses. Conversion: 6 to 10 ft = 1.8 to 3.0 m. (*From* Guide for the Design of High Occupancy Vehicle Facilities, *American Association of State Highway and Transportation Officials, Washington, D.C., 2004, with permission*)

conciseness are essential so as to avoid misinterpretation. Unnecessary details should be avoided.

The original tracings serve as a permanent record of the project. They must be prepared on a material acceptable to the agency responsible for maintaining the plans as a record. A currently widely recommended material is the polyester film Mylar with a thickness of 4 mil (3 mil minimum), double- or single- (top side) matted. The surface should not be highly reflective. Only black ink should be used, although grid lines may be colored. Materials that are usually not acceptable include negatives, sepias, vellum, old sheets, dark background, pencil, paste-ons, stick-ons, or bond paper. Original tracings are usually about 22 by 34 in (559 by 864 mm). The designer should prepare the plans keeping in mind that the drawings will most likely be reduced to quarter size (i.e., 11 by 17 in or 280 by 430 mm) prior to distribution.

More and more agencies are switching over to an electronic plan submission. With the overwhelming use of computer-aided design and drafting (CADD) applications, many agencies, large and small, are expressing a preference for plans developed by CADD software. Although paper prints are still necessary as part of the plan development and construction process, the official filing of Mylar or similar media is being replaced by filing of computer disks that contain design files, including images of plan sheets that can be easily viewed on screen or printed as necessary.

www.EngineeringEBooksPdf.com

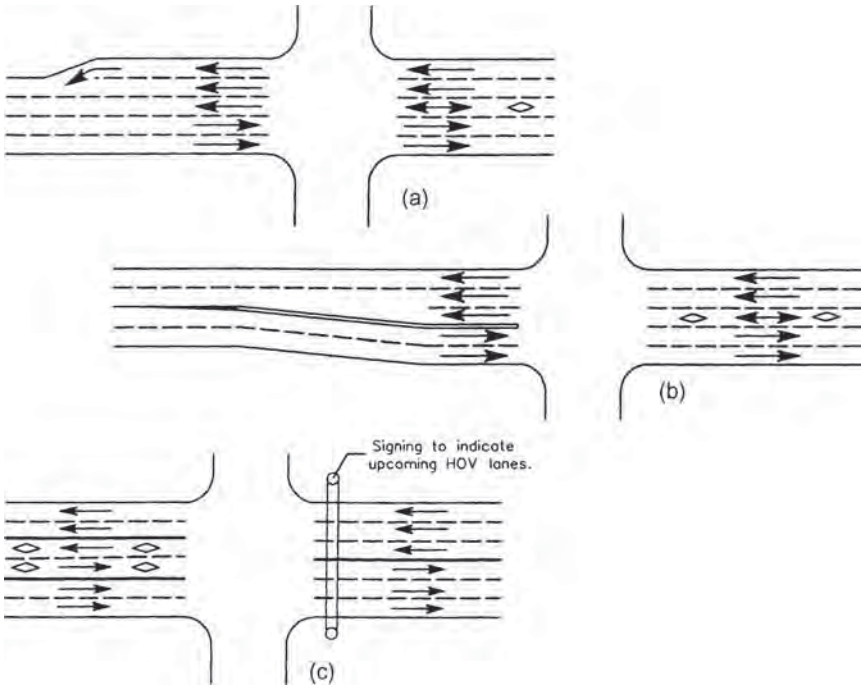

FIGURE 2.71 Typical transitions for median or center lane HOV. (*a*) With reversible HOV lane and outer transition. (*b*) With reversible HOV lane and inner transition. (*c*) With two one-way HOV lanes. (*From* Guide for the Design of High Occupancy Vehicle Facilities, *American Association of State Highway and Transportation Officials, Washington, D.C., 2004, with permission*)

2.14.2 Computer-Aided Design and Drafting (CADD)

As an example of the use of CADD files and design software, the Ohio Department of Transportation (ODOT) has stated that this is the preferred method of preparing plans. ODOT has adopted MicroStation and GEOPAK as its standard drafting and design software (Ref. 8). (*Note:* The preferences mentioned here are those used by ODOT and are cited here only as an example. This is not intended to be an endorsement by the authors. Other agencies use a variety of similar programs.) The standards referenced in the ODOT manual have been developed and tested using the software versions listed on the web site www.dot.state.oh.us/cadd/GPKStandards. For a more detailed explanation and background of the use of CADD in ODOT plan development, the reader may view the CADD Manual at www.dot.state.oh.us/cadd/CaddManual.

All highway CADD software programs are based on a two- or three-dimensional coordinate system that assigns coordinates of a specific point to a number or alphanumeric label. Groups of points make up alignments or property boundaries or roadway centerlines, pavement edges, curbs, sidewalks, etc., in the two-dimensional "plan" view. In the three-dimensional environment, these points have "elevation" values to go along with their x-y plan view coordinates. Likewise, in roadway profiles, similar points make up the vertical profile of a roadway. This also is a two-dimensional

www.EngineeringEBooksPdf.com

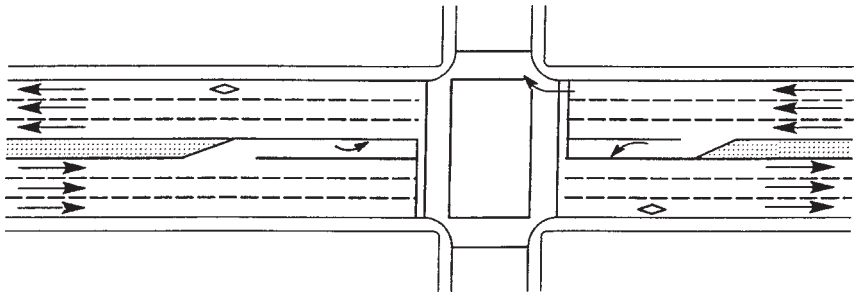

FIGURE 2.72 Common transition for concurrent HOV lanes. (*From* Guide for the Design of High Occupancy Vehicle Facilities, *American Association of State Highway and Transportation Officials, Washington, D.C., 2004, with permission*)

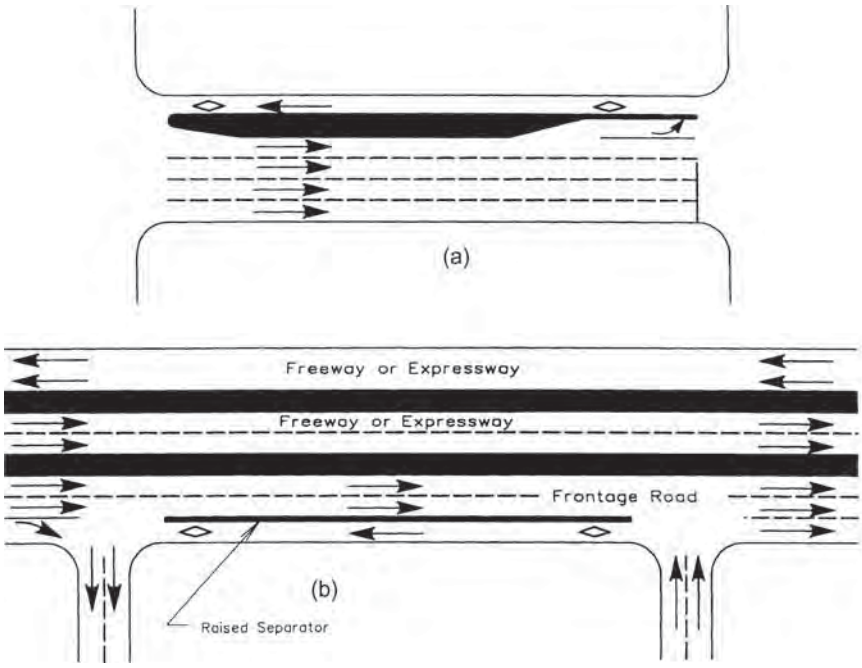

FIGURE 2.73 Typical contraflow HOV lane arrangements. (*a*) Right curb lane. (*b*) Left curb lane. (*From* Guide for the Design of High Occupancy Vehicle Facilities, *American Association of State Highway and Transportation Officials, Washington, D.C., 2004, with permission*)

display using the centerline of the plan view along with its associated elevation. Although vertical curves consist of a series of closely spaced points in a drawing, they take on the appearance of a "curve" to the viewer. In a cross-section view, the elevation component of the point is shown along with its offset reference to the centerline. The view generated is one in which a "slice" of the roadway is taken as it would look

www.EngineeringEBooksPdf.com

if you took a perpendicular plane to the driver and lifted a section of the road up to see it. In the world of CADD, all these points are three-dimensional and yet have been used, as described above, to generate three different combinations of two-dimensional drawings. These two-dimensional drawings make up the majority of the sheets in a set of highway construction plans. The value of CADD is that the points are entered only once, by a described alignment or profile or cross slope in a cross section, and yet have been recalled in numerous applications throughout the plans—whether in developing final cross sections, earthwork calculations, intersection details, drainage designs, etc. CADD software allows the assignment of "names" to various sets of points, such as the centerline of a roadway or the boundary of a property. It also can assign points that are closely associated, if not connected, to a group called a *layer* or *level* in the CADD drawing file. One such layer may contain points for a bridge, or even subdivided into layers for bridge deck, bridge abutment, bridge pier, etc. Other layers can be used for hydraulics, lighting, signals, or signs. The assignment of points to layers is limited only by the storage assignment capability of the software and the capacity of the computer memory itself, which far exceeds that required for most projects. The following sections describe the components of a basic set of highway plans, without reference to CADD applications. However, the end product can be completely produced in the CADD environment.

2.14.3 Plan Components

Typical highway construction plans are made up of several individual components. The paragraphs that follow will present a brief discussion of various types of plan sheets that make up a set. Except for major projects, seldom will all of the components be required in a plan. However, when required, they are usually placed in the order discussed.

The *title sheet* is the first in the set and contains a brief description of the project and indication of its length. It displays the title of the project in large, bold letters. It lists the specifications under which the project is to be built, states whether traffic is to be maintained or detoured, gives an index of all plan sheets, lists standard construction drawings and supplemental specifications, and contains the signatures of approval by the appropriate officials. See Fig. 2.74 for an example.

The *schematic plan* shows the geometric location of proposed roadway segments in relation to existing roadway segments and other major topographic features (rivers, streams, railroads, high-voltage lines, pipelines, etc.). See Fig. 2.75 for an example.

The *typical sections* sheet is a dimensioned cross-sectional view of how the roadway will appear after construction is completed. These sheets generally show lane widths, shoulder widths, pavement buildup, ditch design, foreslope and backslope recommendations, and tie-ins to existing ground lines. Each section is accompanied by a set or sets of station limits identifying to which portion of the roadway it applies. See Fig. 2.76 for an example.

The *general notes* sheets contain plan notes to clarify construction items that are not satisfactorily covered by the specifications or plan details. They may be used to modify standard construction drawings.

The *maintenance of traffic* sheets may include plan view sheets showing location of temporary roads, temporary pavement widening, or detour routes, as well as sheets providing specific notes and instructions regarding sequential construction phases. Details included may be transverse sections showing relationships between the maintenance roadway and the construction area, as well as placement of channelizing devices and lateral construction limits.

www.EngineeringEBooksPdf.com

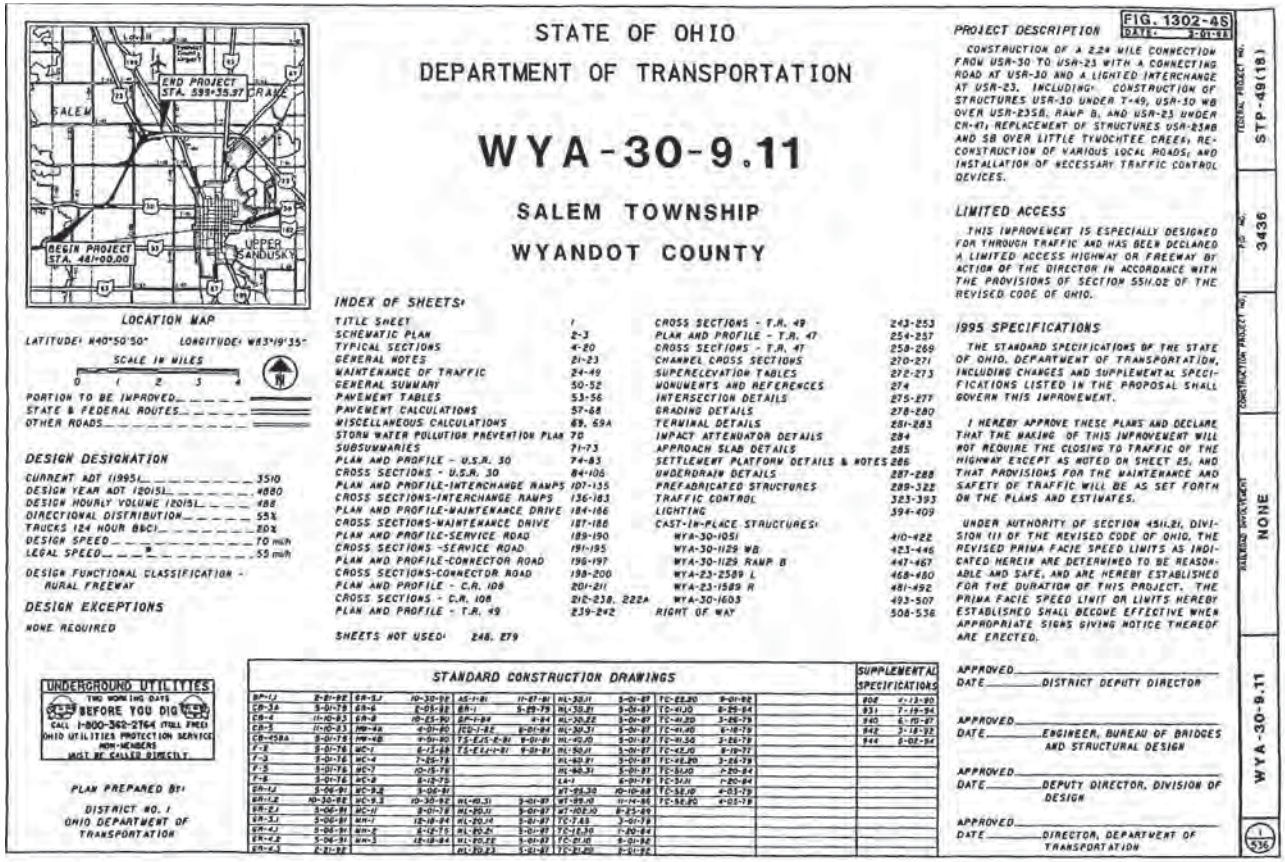

STATE OF OHIO

DEPARTMENT OF TRANSPORTATION

WYA-30-9.11

SALEM TOWNSHIP

WYANDOT COUNTY

FIG. 1302-4S

DATE: 3-01-93

LOCATION MAP

LATITUDE: N40°50'50" LONGITUDE: W83°19'35"

SCALE IN MILES

0 1 2 3 4

PORTION TO BE IMPROVED

STATE & FEDERAL ROUTES

OTHER ROADS

DESIGN DESIGNATION

CURRENT ADT (1995) 3510

DESIGN YEAR ADT (2015) 4880

DESIGN HOURLY VOLUME (2015) 488

DIRECTIONAL DISTRIBUTION 55%

TRUCKS (24 HOUR B&C) 20%

DESIGN SPEED 70 mph

LEGAL SPEED 55 mph

DESIGN FUNCTIONAL CLASSIFICATION - RURAL FREEWAY

DESIGN EXCEPTIONS

NONE REQUIRED

INDEX OF SHEETS:

TITLE SHEET	1
SCHEMATIC PLAN	2-3
TYPICAL SECTIONS	4-20
GENERAL NOTES	21-23
MAINTENANCE OF TRAFFIC	24-49
GENERAL SUMMARY	50-52
PAVEMENT TABLES	53-56
PAVEMENT CALCULATIONS	57-68
MISCELLANEOUS CALCULATIONS	69, 69A
STORM WATER POLLUTION PREVENTION PLAN	70
SUBSUMMARIES	71-73
PLAN AND PROFILE - U.S.R. 30	74-83
CROSS SECTIONS - U.S.R. 30	84-106
PLAN AND PROFILE-INTERCHANGE RAMPS	107-135
CROSS SECTIONS-INTERCHANGE RAMPS	136-183
PLAN AND PROFILE-MAINTENANCE DRIVE	184-186
CROSS SECTIONS-MAINTENANCE DRIVE	187-188
PLAN AND PROFILE-SERVICE ROAD	189-190
CROSS SECTIONS -SERVICE ROAD	191-195
PLAN AND PROFILE-CONNECTOR ROAD	196-197
CROSS SECTIONS-CONNECTOR ROAD	198-200
PLAN AND PROFILE - C.R. 108	201-211
CROSS SECTIONS - C.R. 108	212-238, 222A
PLAN AND PROFILE - T.R. 49	239-242
CROSS SECTIONS - T.R. 49	243-253
PLAN AND PROFILE - T.R. 47	254-257
CROSS SECTIONS - T.R. 47	258-269
CHANNEL CROSS SECTIONS	270-271
SUPERELEVATION TABLES	272-273
MONUMENTS AND REFERENCES	274
INTERSECTION DETAILS	275-277
GRADING DETAILS	278-280
TERMINAL DETAILS	281-283
IMPACT ATTENUATOR DETAILS	284
APPROACH SLAB DETAILS	285
SETTLEMENT PLATFORM DETAILS & NOTES	286
UNDERDRAIN DETAILS	287-288
PREFABRICATED STRUCTURES	289-322
TRAFFIC CONTROL	323-393
LIGHTING	394-409
CAST-IN-PLACE STRUCTURES:	
WYA-30-1051	410-422
WYA-30-1129 WB	423-446
WYA-30-1129 RAMP B	447-467
WYA-23-2589 L	468-480
WYA-23-1589 R	481-492
WYA-30-1603	493-507
RIGHT OF WAY	508-536

SHEETS NOT USED: 248, 279

PROJECT DESCRIPTION

CONSTRUCTION OF A 2.24 MILE CONNECTION FROM USR-30 TO USR-23 WITH A CONNECTING ROAD AT USR-30 AND A LIGHTED INTERCHANGE AT USR-23. INCLUDING: CONSTRUCTION OF STRUCTURES USR-30 UNDER T-49, USR-30 WB OVER USR-23SB, RAMP B, AND USR-23 UNDER CR-47; REPLACEMENT OF STRUCTURES USR-23WB AND SB OVER LITTLE TYMOCHTEE CREEK; RECONSTRUCTION OF VARIOUS LOCAL ROADS; AND INSTALLATION OF NECESSARY TRAFFIC CONTROL DEVICES.

LIMITED ACCESS

THIS IMPROVEMENT IS ESPECIALLY DESIGNED FOR THROUGH TRAFFIC AND HAS BEEN DECLARED A LIMITED ACCESS HIGHWAY OR FREEWAY BY ACTION OF THE DIRECTOR IN ACCORDANCE WITH THE PROVISIONS OF SECTION 5511.02 OF THE REVISED CODE OF OHIO.

1995 SPECIFICATIONS

THE STANDARD SPECIFICATIONS OF THE STATE OF OHIO, DEPARTMENT OF TRANSPORTATION, INCLUDING CHANGES AND SUPPLEMENTAL SPECIFICATIONS LISTED IN THE PROPOSAL SHALL GOVERN THIS IMPROVEMENT.

I HEREBY APPROVE THESE PLANS AND DECLARE THAT THE MAKING OF THIS IMPROVEMENT WILL NOT REQUIRE THE CLOSING TO TRAFFIC OF THE HIGHWAY EXCEPT AS NOTED ON SHEET 25, AND THAT PROVISIONS FOR THE MAINTENANCE AND SAFETY OF TRAFFIC WILL BE AS SET FORTH ON THE PLANS AND ESTIMATES.

UNDER AUTHORITY OF SECTION 4511.21, DIVISION (I) OF THE REVISED CODE OF OHIO, THE REVISED PRIMA FACIE SPEED LIMITS AS INDICATED HEREIN ARE DETERMINED TO BE REASONABLE AND SAFE, AND ARE HEREBY ESTABLISHED FOR THE DURATION OF THIS PROJECT. THE PRIMA FACIE SPEED LIMIT OR LIMITS HEREBY ESTABLISHED SHALL BECOME EFFECTIVE WHEN APPROPRIATE SIGNS GIVING NOTICE THEREOF ARE ERECTED.

APPROVED

DATE DISTRICT DEPUTY DIRECTOR

APPROVED

DATE ENGINEER, BUREAU OF BRIDGES AND STRUCTURAL DESIGN

APPROVED

DATE DEPUTY DIRECTOR, DIVISION OF DESIGN

APPROVED

DATE DIRECTOR, DEPARTMENT OF TRANSPORTATION

FEDERAL PROJECT NO. STP-49(18)

PID NO. 3436

CONSTRUCTION PROJECT NO.

RAILROAD INVOLVEMENT NONE

WYA-30-9.11

UNDERGROUND UTILITIES

TWO WORKING DAYS BEFORE YOU DIG

CALL 1-800-362-2764 (TOLL FREE)

OHIO UTILITIES PROTECTION SERVICE

NON-MEMBERS MUST BE CALLED DIRECTLY.

PLAN PREPARED BY:

DISTRICT NO. 1

OHIO DEPARTMENT OF TRANSPORTATION

STANDARD CONSTRUCTION DRAWINGS

BR-1.1	2-01-92	BR-3.1	10-30-92	AS-1-81		11-87-81	ML-30.11	5-01-87	TC-62.20	9-01-92				908	4-13-90
CB-3.1	5-01-78	BR-6	2-05-92	BR-1		5-29-79	ML-30.21	5-01-87	TC-41.10	8-25-84				931	7-19-94
CB-4	11-10-83	BR-8	10-05-90	BR-1-84		4-84	ML-30.22	5-01-87	TC-41.20	3-26-79				940	6-10-87
CB-5	11-10-83	MB-4A	4-01-90	ICS-1-82		8-01-84	ML-30.31	5-01-87	TC-41.40	6-16-79				942	3-18-93
CB-45BA	5-01-78	MB-4B	4-01-90	TS-E.E.C-8-81		8-01-81	ML-40.10	5-01-87	TC-41.50	3-26-79				944	8-02-94
F-2	5-01-76	MC-1	6-12-68	TS-E.E.C-1-81		8-01-81	ML-50.11	5-01-87	TC-42.10	6-16-77					
F-3	5-01-76	MC-4	7-25-78				ML-50.21	5-01-87	TC-42.20	3-26-79					
F-5	5-01-76	MC-7	10-15-76				ML-50.31	5-01-87	TC-51.10	7-20-84					
F-8	5-01-76	MC-8	5-12-75				L4-1	6-01-79	TC-51.11	7-20-84					
GR-1.2	5-06-91	MC-9.2	5-06-91				WT-95.30	10-10-88	TC-52.10	4-03-79					
GR-1.2	10-30-92	MC-9.3	10-30-92	ML-40.31		5-01-87	WT-95.10	11-14-86	TC-52.20	4-03-79					
GR-2.1	5-06-91	MC-11	3-01-78	ML-50.11		5-01-87	WT-102.10	8-25-84							
GR-3.1	5-06-91	MH-1	12-18-84	ML-50.14		5-01-87	TC-7.43	3-01-79							
GR-4.1	5-06-91	MH-2	6-12-75	ML-50.21		5-01-87	TC-16.30	1-20-84							
GR-4.2	5-06-91	MH-3	12-18-84	ML-50.22		5-01-87	TC-21.10	8-01-82							
GR-4.3	2-21-92			ML-50.23		5-01-87	TC-21.20	8-01-82							

SUPPLEMENTAL SPECIFICATIONS

FIGURE 2.74 Typical highway construction plans: example of title sheet showing index to various types of plans. (*From* Location and Design Manual, *Vol. 3,* Highway Plans, *Ohio Department of Transportation, with permission*)

www.EngineeringEBooksPdf.com

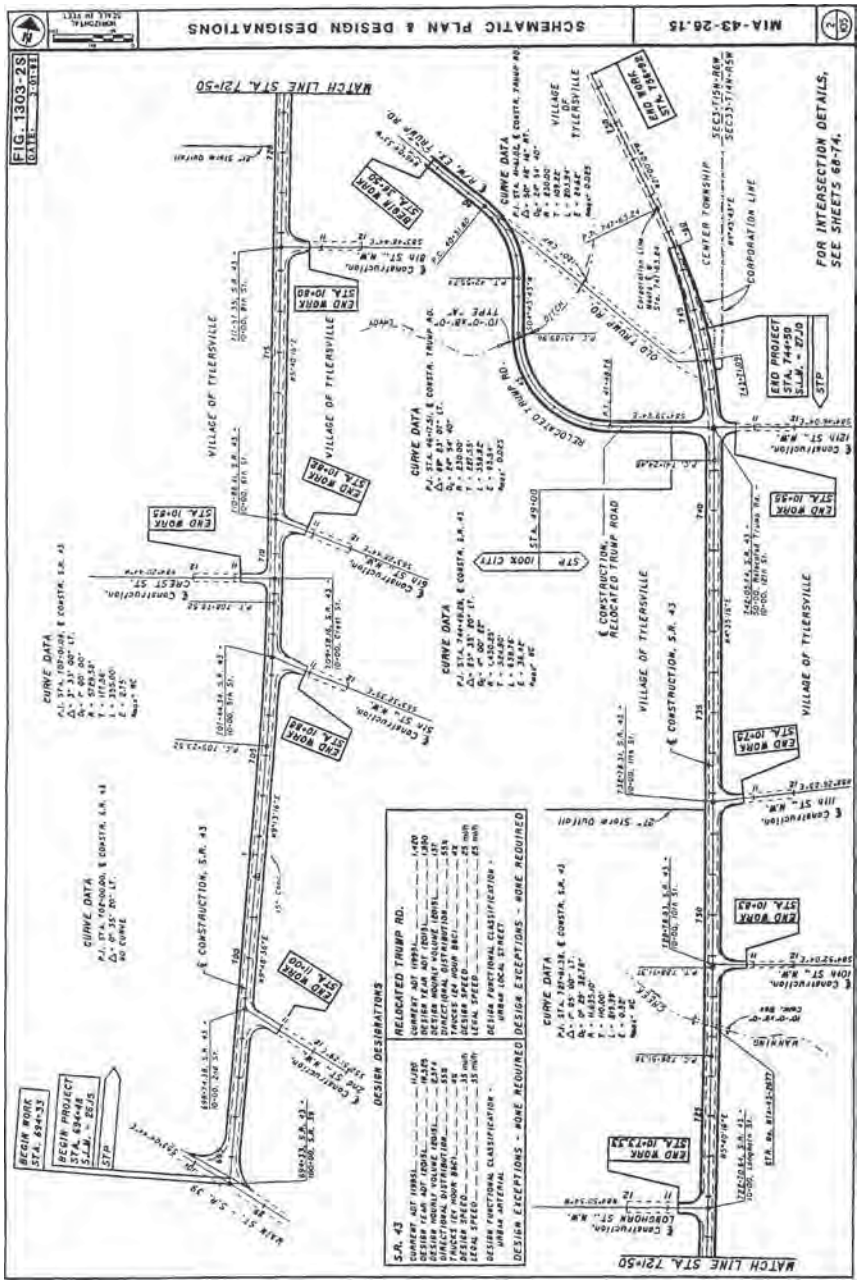

FIGURE 2.75 Typical highway construction plans: example of schematic plan showing location. (*From* Location and Design Manual, *Vol. 3*, Highway Plans, *Ohio Department of Transportation, with permission*)

www.EngineeringEBooksPdf.com

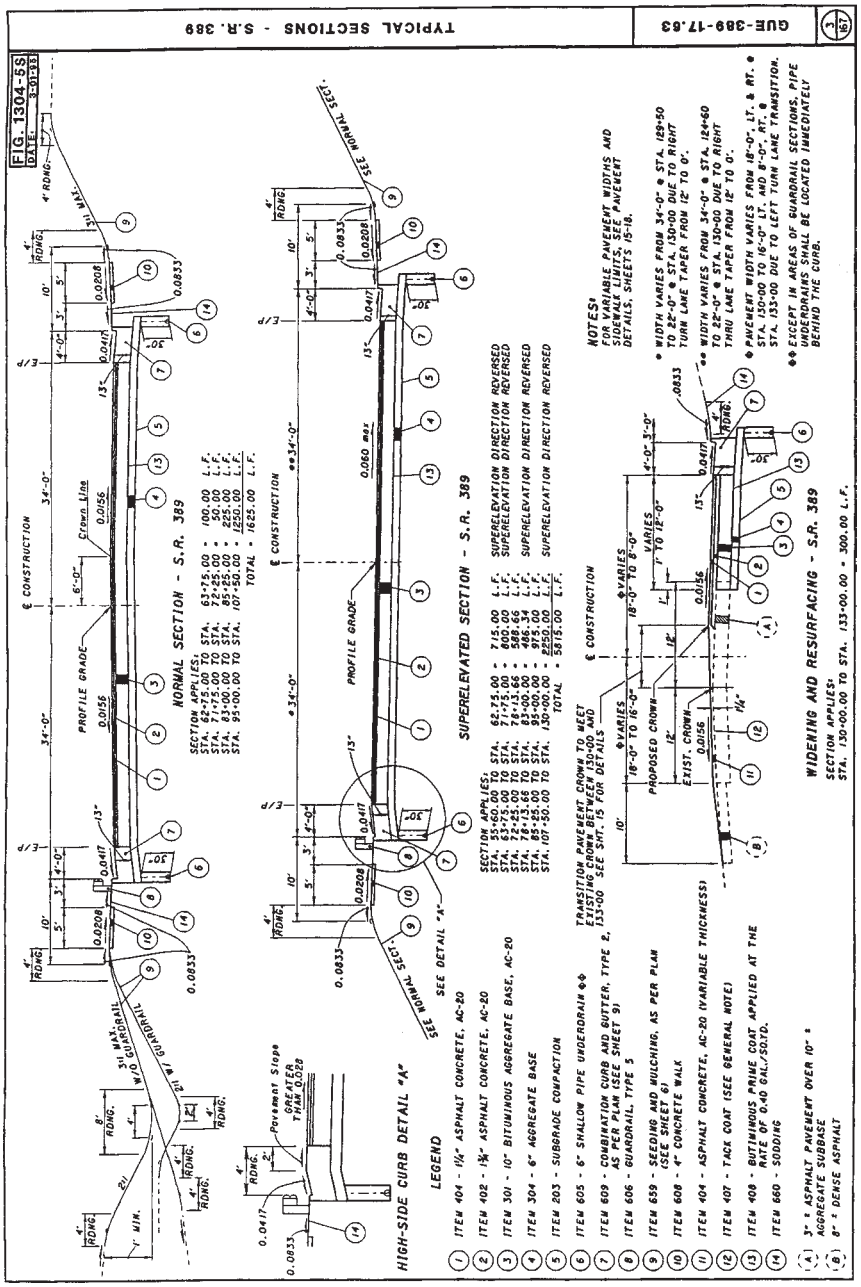

FIGURE 2.76 Typical highway construction plans: example of typical roadway cross sections. (*From* Location and Design Manual, *Vol. 3*, Highway Plans, *Ohio Department of Transportation, with permission*)

www.EngineeringEBooksPdf.com

The *general summary* sheets contain the itemized list of quantities on which the contractor bid and eventual payment will be based. Any items not listed on these sheets will contain a sheet number reference where they are listed elsewhere in the plans. Each item will usually have a sheet number reference indicating where the item may be found in the plan, or where a subsummary of this information may be found. See Fig. 2.77 for an example.

The *calculations* sheet provides a record of how quantity pay items were calculated. The sheet provides a way of checking these quantities and also usually indicates by station references where these items are used in the plans.

A *storm water pollution prevention plan* may be required by some agencies, depending on how much surface area is disturbed by construction. The threshold limit in Ohio is currently 5 acres (20 km^2). The purpose of these sheets is to provide information on how storm water runoff is to be controlled during construction. Details shown will include the location of existing streams, lakes, wetlands, springs, etc., within 250 ft (76 m) of the construction area.

The *plan and profile* sheets show what an area looks like before and after construction of the project. In addition, they show quantities, dimensions, and other items required to lay out and construct the project. The sheet is normally divided into three areas—plan view, profile, and quantities. See Fig. 2.78 for an example.

The *cross sections* sheets contain a series of section "slices" of the roadway taken at regular intervals and are used primarily to determine the amount of earthwork and seeding required on the project. They may also be used to locate ditches, show proposed drainage features, design driveways, and establish limits of proposed right-of-way. See Fig. 2.79 for an example.

The *miscellaneous details* sheets are a section of the plans that serve as a "catch-all" for items that do not fit under other headings. Items that may appear on these sheets include approach slab details with elevations, driveway details, grading plans at intersections or interchanges, guiderail details, impact attenuator details, intersection details with elevations, linear grading details, pavement details showing elevations, superelevation tables, and noise barriers.

The *drainage details* sheets provide details for prefabricated structures and other drainage items that cannot be adequately shown on other sheets. These sheets include culvert details—not only the structure details, but also the grading plan in the vicinity.

Other specialized sheets that may be part of the plan are as follows:

Prefabricated structures

Sanitary sewers

Water lines

Traffic control (includes proposed signing, striping, and traffic signals)

Lighting

Landscaping

Cast-in-place structures (includes bridges, retaining walls)

Fence plan (refers to right-of-way fencing on limited-access projects)

Right-of-way (listing all affected property owners, parcel numbers, and required right-of-way to be purchased)

Soil profile and foundation investigation

www.EngineeringEBooksPdf.com

FIG. 1307-8S
DATE: 3-01-88

SHEET NUMBER 32	64	68	165	175	FUNDING 100% CITY	NH	STP	ITEM	ITEM EXT.	GRAND TOTAL	UNIT	DESCRIPTION	SEE SHEET NO.
												PAVEMENT	
1844							1844	254	01000	1844	SQ. YD.	PAVEMENT PLANING, BITUMINOUS	
1265							1265	301	10002	1265	CU. YD.	BITUMINOUS AGGREGATE BASE, AC-20	
2627						986	1641	304	20000	2627	CU. YD.	AGGREGATE BASE	
5333						5333		305	12000	5333	SQ. YD.	8" CONCRETE BASE	
1048						1048		310	12000	1048	CU. YD.	SUBBASE, TYPE 1, GRADING A	
497						268	229	402	20000	497	CU. YD.	ASPHALT CONCRETE, AC-20	
38							38	403	20000	38	CU. YD.	ASPHALT CONCRETE, AC-20	
415						226	189	404	20000	415	CU. YD.	ASPHALT CONCRETE, AC-20	
18							18	404	25000	18	CU. YD.	ASPHALT CONCRETE, AC-20 (DRIVEWAYS)	
533						533		407	10000	533	GALLON	TACK COAT	
3114						1066	2048	408	10000	3114	GALLON	BITUMINOUS PRIME COAT	
57						36	21	409	12000	57	CU. YD.	SEAL COAT COVER AGGREGATE, No. 8	
1411						802	609	409	20000	1411	GALLON	SEAL COAT BITUMINOUS MATERIAL	
4000						4000		609	12000	4000	LIN. FT.	COMBINATION CURB AND GUTTER, TYPE 2	
73						73		611	10000	73	SQ. YD.	REINFORCED CONCRETE APPROACH SLAB (7"-12")	
35							35	612	14000	35	SQ. YD.	6" CONCRETE TRAFFIC ISLAND	
												WATER WORK	
		896			896			SPECIAL	63860400	896	LIN. FT.	12" DUCTILE IRON WATER PIPE AND FITTINGS (COL. 801)	
		14			14			SPECIAL	63861900	14	EACH	6" VALVE AND APPURTENANCES (COL. 802)	
		10			10			SPECIAL	63863800	10	EACH	1-½" WATER SERVICE TAP, COMPLETE (COL. 805)	
		8			8			SPECIAL	63865502	8	EACH	SERVICE BOX REMOVED AND RESET (COL. 807)	
		4			4			SPECIAL	63866602	4	EACH	FIRE HYDRANT, TYPE A (COL. 809)	
												SANITARY SEWER	
	12						12	202	58700	12	EACH	MANHOLE ABANDONED	
	200						200	603	00800	200	LIN. FT.	6" CONDUIT, TYPE B, 706.01 OR 706.08 WITH 706.11 OR 706.12 JOINTS	
	284						284	603	02000	284	LIN. FT.	8" CONDUIT, TYPE C, 706.08 WITH 706.12 JOINTS	
	273						273	603	04400	273	LIN. FT.	12" CONDUIT, TYPE B, 706.03 2750 D-LOAD WITH 706.11 JOINTS	
	28						28	603	05900	28	LIN. FT.	15" CONDUIT, TYPE B, 706.03 WITH 706.11 JOINTS	
	230						230	603	07400	230	LIN. FT.	18" CONDUIT, TYPE B, 706.03 3250 D-LOAD WITH 706.11 JOINTS	
	5						5	604	31500	5	EACH	MANHOLE, No. 3 WITH 706.11 JOINTS	
	8						8	604	34500	8	EACH	MANHOLE ADJUSTED TO GRADE	
	3						3	604	35500	3	EACH	MANHOLE RECONSTRUCTED TO GRADE	
												LIGHTING	
				2		2		202	75403	2	EACH	LIGHT POLE REMOVED FOR STORAGE, AS PER PLAN	130
				2		2		202	75500	2	EACH	LIGHT POLE FOUNDATION REMOVED	
				2		2		202	75505	2	EACH	LUMINAIRE REMOVED FOR STORAGE, AS PER PLAN	130
				1		1		625	00500	1	EACH	CONNECTOR KIT, TYPE II	
				1		1		625	00600	1	EACH	CONNECTOR KIT, TYPE III	
				2		2		625	14100	2	EACH	LIGHT POLE FOUNDATION, 24" x 8' DEEP	
				80		80		625	23200	80	LIN. FT.	No. 4 AWG 5000 VOLT DISTRIBUTION CABLE	
				40		40		625	29002	40	LIN. FT.	TRENCH, 24" DEEP	
				2		2		625	35001	2	EACH	REERECT EXISTING LIGHT POLE, AS PER PLAN	131
				2		2		625	35101	2	EACH	REERECT EXISTING LUMINAIRE, AS PER PLAN	131
												LANDSCAPING	
			5				5	657	10000	5	SQ. YD.	RIPRAP FOR TREE PROTECTION	
			25				25	658	10000	25	CU. YD.	TREE ROOT AERATION	
			400				400	659	10000	400	SQ. YD.	SEEDING AND MULCHING	
			6				6	662	20500	6	EACH	EVERGREEN SHRUB, 15"-18" HEIGHT, JUNIPERUS HORIZONTALIS, 10" B&B	
			15				15	666	10000	15	EACH	PRUNING EXISTING TREE, 8"-16" DIAMETER	

GENERAL SUMMARY

FRA-11-26.48

27 / 188

FIGURE 2.77 Typical highway construction plans: example of general summary sheet showing itemized quantities. (*From* Location and Design Manual, *Vol. 3,* Highway Plans, *Ohio Department of Transportation, with permission*)

www.EngineeringEBooksPdf.com

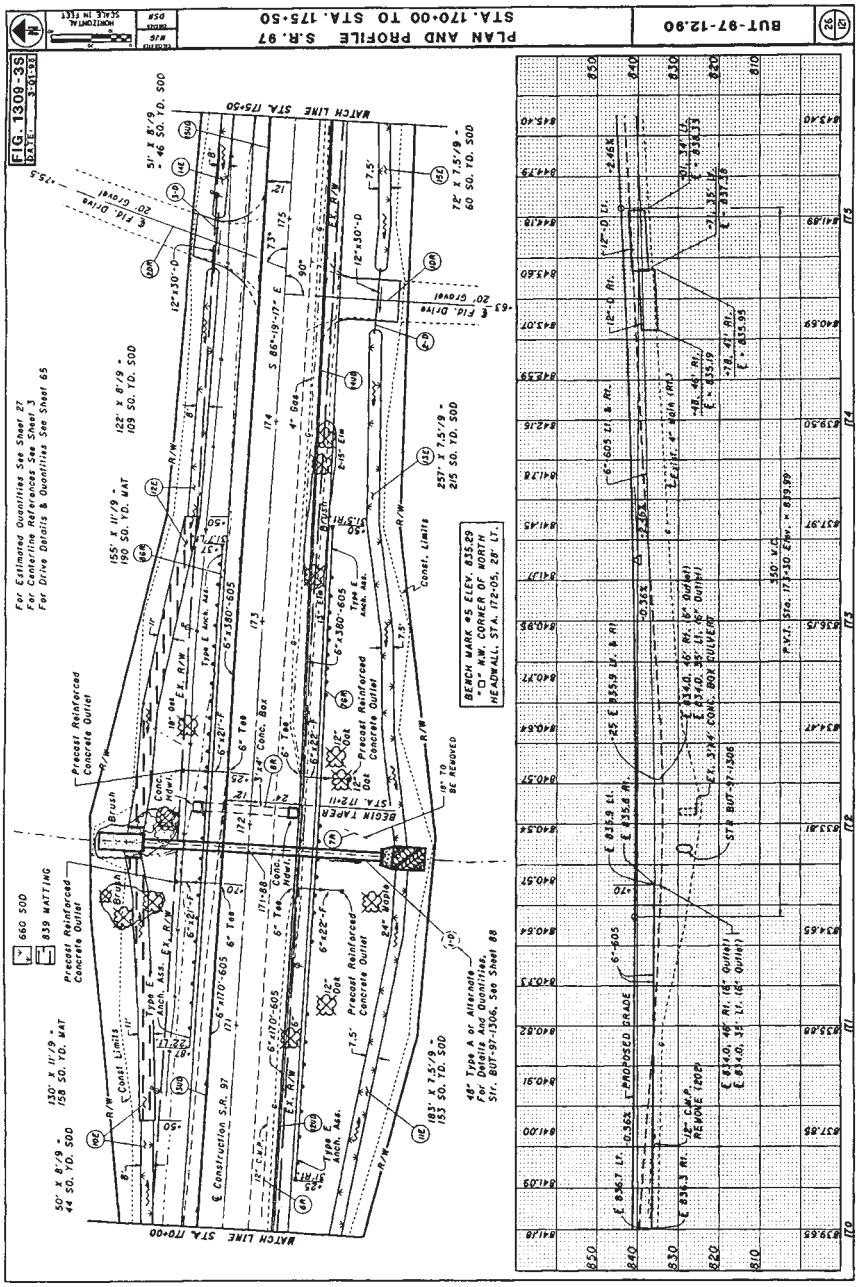

FIGURE 2.78 Typical highway construction plans: example of plan and profile sheet. (*From* Location and Design Manual, *Vol. 3*, Highway Plans, *Ohio Department of Transportation, with permission*)

www.EngineeringEBooksPdf.com

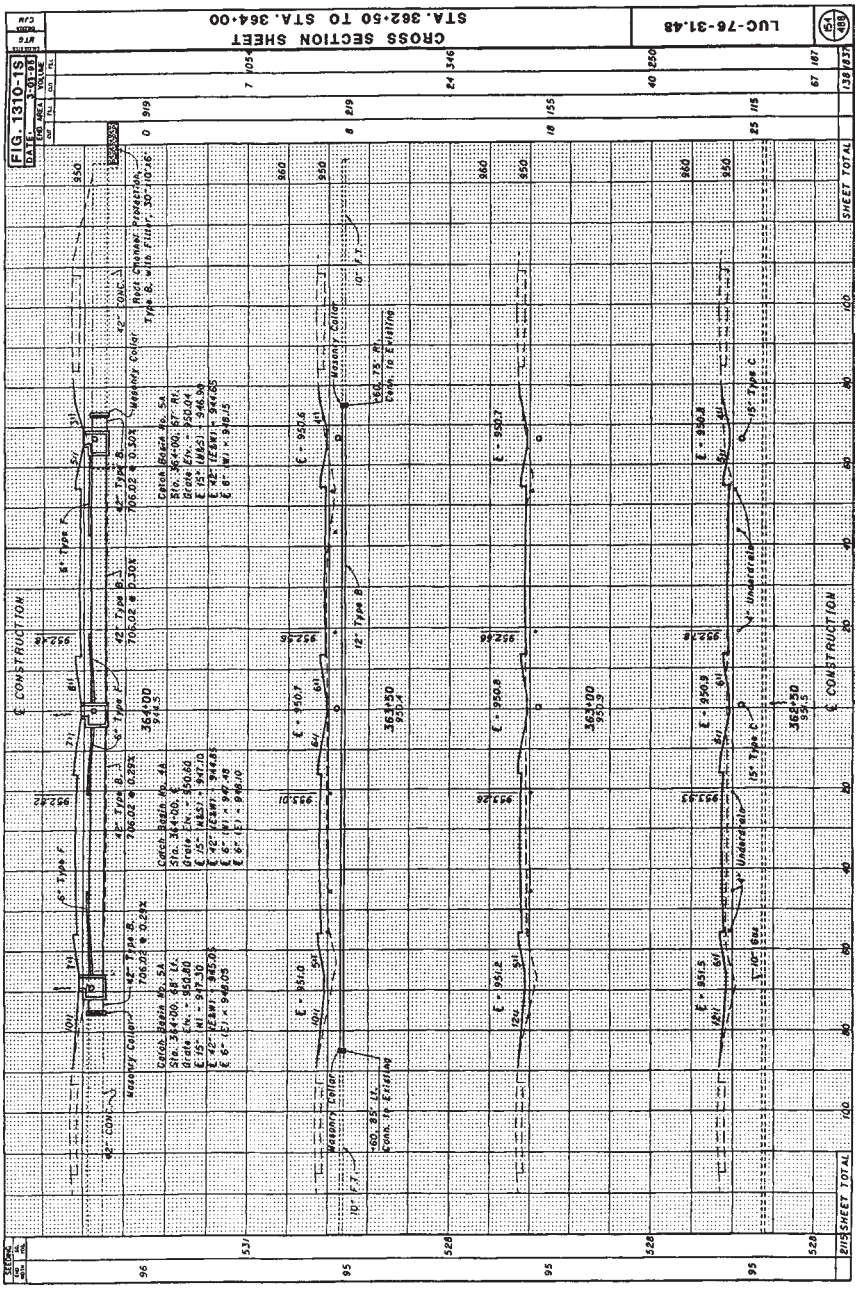

FIGURE 2.79 Typical highway construction plans: example of general cross sections at specific locations. (*From* Location and Design Manual, *Vol. 3*, Highway Plans, *Ohio Department of Transportation, with permission*)

www.EngineeringEBooksPdf.com

2.15 REFERENCES

1. *A Policy on Geometric Design of Highways and Streets*, AASHTO, Washington, D.C., 2004.
2. *Roadside Design Guide*, AASHTO, Washington, D.C., 1989.
3. *Guide for the Design of High Occupancy Vehicle Facilities*, AASHTO, Washington, D.C., 2004.
4. *Traffic Engineering Handbook*, Institute of Transportation Engineers, Washington, D.C., 1992.
5. Intelligent Vehicle-Highway Society of America, *IVHS Architecture Development Program*, *Interim Status Report*, IVHS America, Washington, D.C., 1994.
6. *The Transportation Development Process*, Ohio Department of Transportation, Columbus, 1983.
7. *Location and Design Manual*, Vol. 1, *Roadway Design*, Ohio Department of Transportation, Columbus, 2006.*
8. *Location and Design Manual*, Vol. 3, *Highway Plans*, Ohio Department of Transportation, Columbus, 2007.*
9. State of California Department of Transportation, "High Occupancy Vehicle (HOV) Guidelines for Planning, Design, and Operations," U.S. Department of Transportation, DOT-T-91-17, Washington, D.C., 1991.
10. "Highway Capacity Manual," Special Report 209, Transportation Research Board, National Research Council, Washington, D.C., 2000.
11. Architectural and Transportation Barriers Compliance Board, "Americans with Disabilities Act (ADA) Accessibility Guidelines: State and Local Government Facilities," pub. *Federal Register*, vol. 57, no. 245, Monday, December 21, 1992; Architectural and Transportation Barriers Compliance Board, Washington, D.C., 1991, 1992.
12. Jack E. Leisch, *Turning Vehicle Templates*, Institute of Transportation Engineers, Washington, D.C., 1988.
13. Balke Engineers, *Justification Study for Crossroad Grade Separations*, *US 30* (*Lincoln Highway*), *from Upper Sandusky to Bucyrus*, *Wyandot and Crawford Counties*, *Ohio*, Ohio Department of Transportation, District 1, Lima, 1994.
14. *Standard Construction Drawings*, Bureau of Location and Design, Ohio Department of Transportation, Columbus, 2007.*
15. *Guidelines for Geometric Design of Very Low Volume Local Roads (ADT ≤ 400)*, AASHTO, Washington, D.C., 2001.
16. AutoTURN Software, available from Transfer Solutions. See http://www.transoftsolutions.com.

*See http://www.dot.state.oh.us/drrc.

www.EngineeringEBooksPdf.com

www.EngineeringEBooksPdf.com

CHAPTER 3
PAVEMENT DESIGN AND REHABILITATION

Aric A. Morse, P.E.
Pavement Design Engineer
Ohio Department of Transportation
Columbus, Ohio

Roger L. Green, P.E.
Pavement Research Engineer
Ohio Department of Transportation
Columbus, Ohio

The movement of people and goods throughout the world is primarily dependent upon a transportation network consisting of roadways. Most, if not all, business economies, personal economies, and public economies are the result of this transportation system. Considering the high initial and annual costs of roadways, and since each roadway serves many users, the only prudent owner of roadways is the public sector. Thus it is the discipline of civil engineering that manages the vast network of roadways.

The surface of these roadways, the *pavement,* must have sufficient smoothness to allow a reasonable speed of travel, as well as ensure the safety of people and cargo. Additionally, once the pavement is in service, the economies that depend upon it will be financially burdened if the pavement is taken out of service for repair or maintenance. Thus, pavements should be designed to be long lasting with few maintenance needs.

The accomplishment of a successful pavement design depends upon several variables. The practice of pavement design is based on both engineering principles and experience. Pavements were built long before computers, calculators, and even slide rules. Prior to more modern times, pavements were designed by trial-and-error and common sense methods, rather than the more complicated methods being used currently. Even more modern methods require a certain amount of experience and common sense. The most widely used methods today are based on experiments with full-scale, in-service pavements that were built and monitored to failure. Empirical information derived from these road tests is the most common basis for current pavement design methods. More recently, with the ever-expanding power of personal computers, more mathematically based pavement design methods such as finite element analysis and refined elastic layer theory have been introduced. These methods require extensive training to use and are not developed for the inexperienced.

www.EngineeringEBooksPdf.com

Types of pavements can be broadly categorized as rigid, flexible, or composite. The characteristics of these types are reviewed in the following articles.

3.1 RIGID PAVEMENT

Rigid pavement can be constructed with contraction joints, expansion joints, dowelled joints, no joints, temperature steel, continuous reinforcing steel, or no steel. Most generally, the construction requirements concerning these options are carefully chosen by the owner or the public entity that will be responsible for future maintenance of the pavement. The types of joints and the amount of steel used are chosen in concert as a strategy to control cracking in the concrete pavement. Often, the owner specifies the construction requirements but requires the designer to take care of other details such as intersection jointing details and the like. It is imperative that a designer understand all of these design options and the role each of these plays in concrete pavement performance.

The category of rigid pavements can be further broken down into those with joints and those without. Jointed reinforced concrete pavement (JRCP) and jointed plain concrete pavement (JPCP) are the two basic types of jointed concrete pavement. Continuously reinforced concrete pavement (CRCP) has no joints. JRCP is designed for maximum joint spacing permitting cracking between joints and requires temperature steel. JPCP is designed for no cracking between joints; thus, joint spacing is minimized and temperature steel is eliminated. Historically, many jointed pavements were constructed without dowelled joints. Past performance of undowelled jointed pavements—with the exception of warm, dry climates or low-volume roadways—has been poor. Where there are more than a few trucks per day, dowels should be considered at contraction joints. However, low-volume roadways that do not carry significant trucks, such as residential streets, may perform satisfactorily without dowelled joints.

3.1.1 Jointed Rigid Pavement

Jointed rigid pavements tend to crack at 13 to 25 ft (4 to 8 m) lengths because of (1) initial shrinkage after placement as excess water evaporates, (2) temperature-induced expansion and contraction resisted by friction with the subgrade, (3) curling and warping caused by temperature and moisture differences between the top and bottom of the slab, and (4) load-induced stresses.

As slabs contract as a result of seasonal temperature changes, cracks form and widen, or formed joints widen, allowing incompressible materials into the cracks or joints. Subsequently, expansion is hindered and pressure is built up in the pavement. This pressure can result in pressure spalling or even blowups. To control this, partial depth saw cuts are made at regular intervals which induce concrete to crack at these locations. The timing and depth of these saw cuts are critical to ensure that the pavement cracks at the controlled location. Saw cuts should be made as soon as the pavement can support the weight of the saw and operator. The saw cuts should be made at a depth of one-third of the slab thickness for longitudinal joints, and one-fourth of the slab thickness for transverse joints. These saw cuts are then sealed with some type of joint sealer to prevent intrusion of incompressibles. If the saw cut interval (joint spacing) is short enough, intermediate cracks are eliminated. If longer intervals are used, intermediate cracks will form.

Load transfer is the critical element at joints and cracks. In undowelled, unreinforced pavements, any load transfer must be provided by aggregate interlock.

www.EngineeringEBooksPdf.com

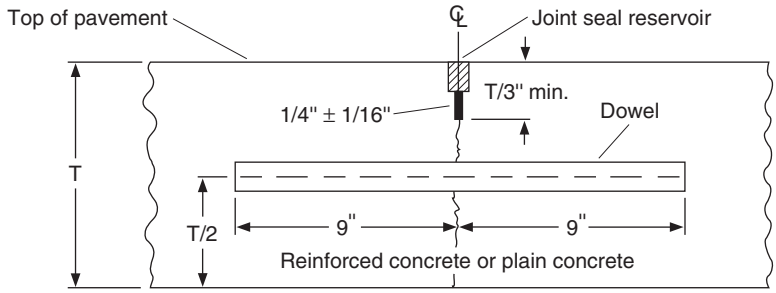

FIGURE 3.1 Typical contraction joint in rigid pavement with dowel for positive load transfer. Conversion: 1 in = 25.4 mm.

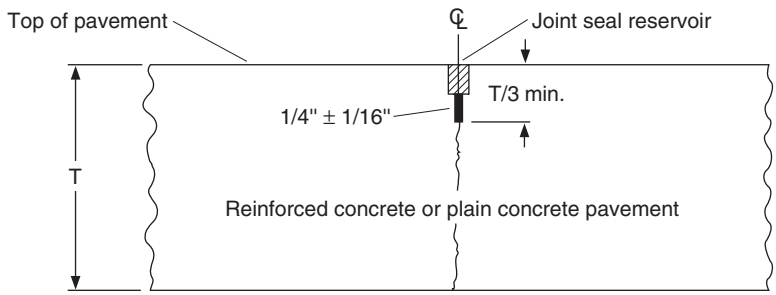

FIGURE 3.2 Typical contraction joint in rigid pavement without dowel for load transfer. Conversion: 1 in = 25.4 mm.

Aggregate interlock is lost when slabs contract and the joints or cracks open up. Also, interlock is slowly destroyed by the movement of the concrete as traffic passes over. Given large temperature variations and heavy trucks, aggregate interlock is ineffectual, and faulting is the primary result.

To provide load transfer at the joints, dowels are used which allow for expansion and contraction. Figure 3.1 illustrates a typical doweled joint with saw cut and joint seal. Figure 3.2 shows a similar joint without the dowel to provide load transfer.

Where a long joint spacing is used and intermediate cracks are expected, steel reinforcement is added to hold the cracks tightly closed (JRCP). This allows the load transfer to be accomplished through aggregate interlock without the associated problems described above. Contraction joints do not provide for expansion of the pavement unless the same amount of contraction has already taken place. This contraction will initially be from shrinkage due to concrete curing. Later changes in the pavement length are due to temperature changes.

Where fixed objects such as structures are placed in the pavement, the use of an expansion joint is warranted. Expansion joints should be used sparingly. The pavement will be allowed to creep toward the expansion joint, thus opening the adjacent contraction joints. This can cause movement in the adjacent contraction joints in excess of their design capabilities and result in premature failures. Figure 3.3 shows a detail for a typical expansion joint.

The design of reinforcing steel is a function of seasonal temperature change, subbase friction, and the weight of the slab. Inadequate reinforcing will not be able to hold the

www.EngineeringEBooksPdf.com

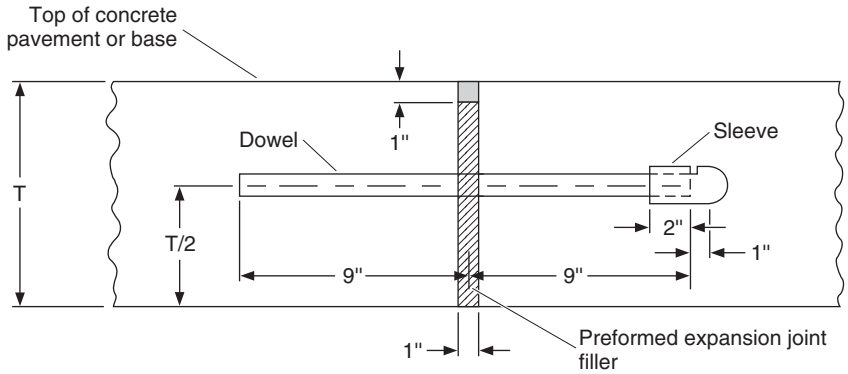

FIGURE 3.3 Typical expansion joint in rigid pavement with ASTM D6690 type II joint seal. Conversion: 1 in = 25.4 mm.

cracks together, and faulting will result. The amount of reinforcing needed to hold cracks together is traditionally calculated using a relationship based on the friction between the subgrade and the bottom of the slab. This relationship assumes that for a crack to open enough to fail the aggregate interlock, the slab will have to slide along the subbase. The current AASHTO recommendation is based on this traditional approach (*Guide for Design of Pavement Structures,* American Association of State Highway and Transportation Officials, 1993).

The relationship can be expressed as follows:

$$A_s = \frac{WFL}{2f_s} \tag{3.1}$$

where A_s = area of steel required, in^2/ft of width (mm^2/mm)
W = weight of slab, lb/ft^2 (MPa)
F = coefficient of resistance between slab and subgrade (1.5 unless otherwise known)
L = length of slab, ft (mm)
f_s = allowable stress in steel, lb/in^2 (MPa)

Although these relationships are accepted by most leading authorities and are referred to in almost every reference on the subject, it is important to understand that they make many assumptions about physical quantities that are seldom consistent throughout a length of pavement. For instance, the friction factor can be affected by something as insignificant as a large footprint in the base course prior to paving. Additionally, the environment can play an important role as water and salt erode the steel, thus reducing the sectional area of the steel.

Where reinforcement is not desired, slab lengths must be chosen so that intermediate transverse cracks are eliminated. The most current theory used to determine allowable slab lengths involves a very old concept developed by Dr. H. M. Westergaard. Westergaard defined a constant called the *radius of relative stiffness* as an algorithm that relates the modulus of subgrade reaction to the flexural stiffness of the slab. Research indicates that cracking can be expected when the ratio between the slab length

www.EngineeringEBooksPdf.com

and the radius of relative stiffness is greater than 5. The radius can be calculated from the following equation (Federal Highway Administration Technical Advisory T 5040.30, November 30, 1990):

$$l = \left[\frac{Eh^3}{12k(1 - \nu^2)} \right]^{0.25} \tag{3.2}$$

where l = radius of relative stiffness, in (mm)
E = modulus of elasticity of concrete, lb/in^2 (MPa)
h = pavement thickness, in (mm)
k = modulus of subgrade reaction, (lb/in^2)/in (MPa/mm)
ν = Poisson's ratio (0.15)

3.1.2 Rigid Pavement Jointing Details for Intersections

The following basic principles must be observed in developing a correct jointing detail:

1. Never taper concrete down to less than 2 ft (610 mm) in width.
2. Depending upon the amount of transverse reinforcing steel, be careful of the number of lanes that are tied together. In JPCP, tying more than three 12-ft (3.7-m) lanes together may result in uncontrolled longitudinal cracking.
3. Always design the secondary (intersecting) route as independent in movement from the primary route. Thus, as the primary route expands and contracts, no unnecessary forces will be created in the secondary route.
4. Provide for expansion wherever payment is interrupted in its longitudinal direction.
5. Terminate joints at 90° to any intersecting joints, obstructions, or edges of pavement.
6. Where possible, lay out lane widths of the same dimension. This permits the contractor to pave all the lanes without changing the paving machine setup dimensions.
7. Unless unavoidable, all joints should be in a straight line. Curved joints are difficult to saw and generally require additional forming.
8. For plain (nonreinforced) concrete pavement, the slab length/slab width ratio should not exceed 2:1.

Intersection details should always be included in construction plans. A proper jointing layout ensures that cracking occurs at locations where load transfer exists (contraction joints) and away from wheel paths (longitudinal joints). The jointing detail should be a separate detail in the plan to eliminate confusion and allow field personnel to easily lay out the intersection without construction delay. Figures 3.4 and 3.5 show jointing layouts that have been used for typical intersections.

3.1.3 Rigid Pavement Joint Sealing

Joint sealing prohibits the infiltration of water into the pavement base and prevents incompressibles from lodging within the joint cavity. The advantages of keeping water out from under a pavement are documented extensively in the AASHTO *Pavement*

www.EngineeringEBooksPdf.com

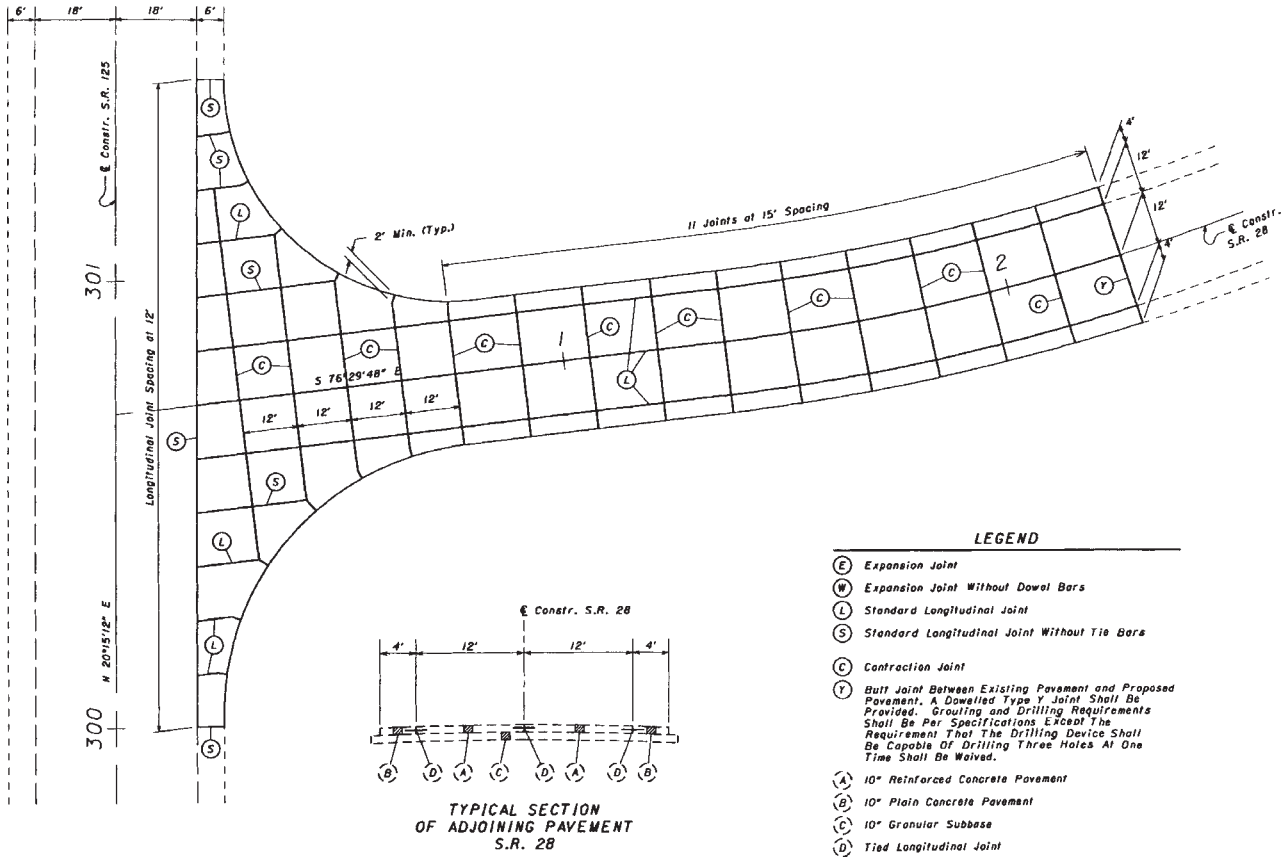

FIGURE 3.4 Layout of joints in rigid pavement at skewed intersection. Conversions: 1 in = 25.4 mm, 1 ft = 0.305 m.

www.EngineeringEBooksPdf.com

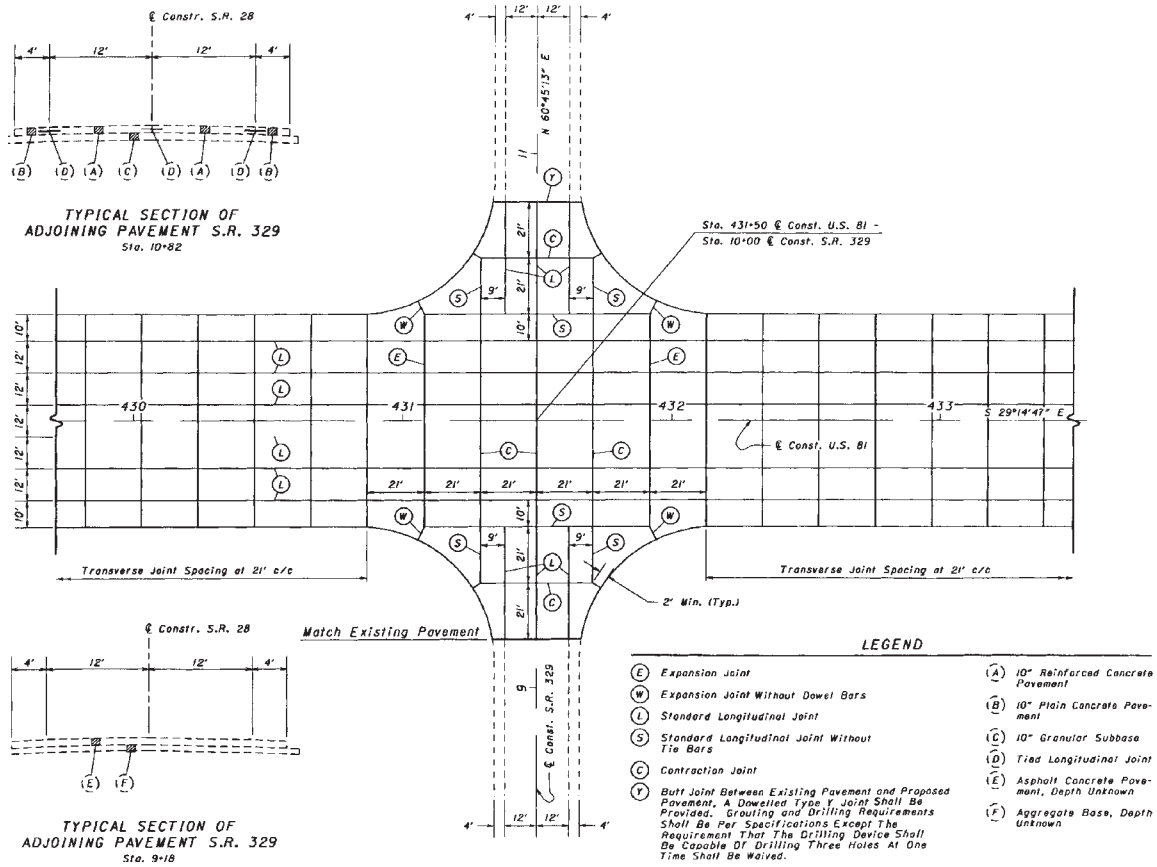

FIGURE 3.5 Layout of joints in rigid pavement at right-angle intersection. Conversions: 1 in = 25.4 mm, 1 ft = 0.305 m.

www.EngineeringEBooksPdf.com

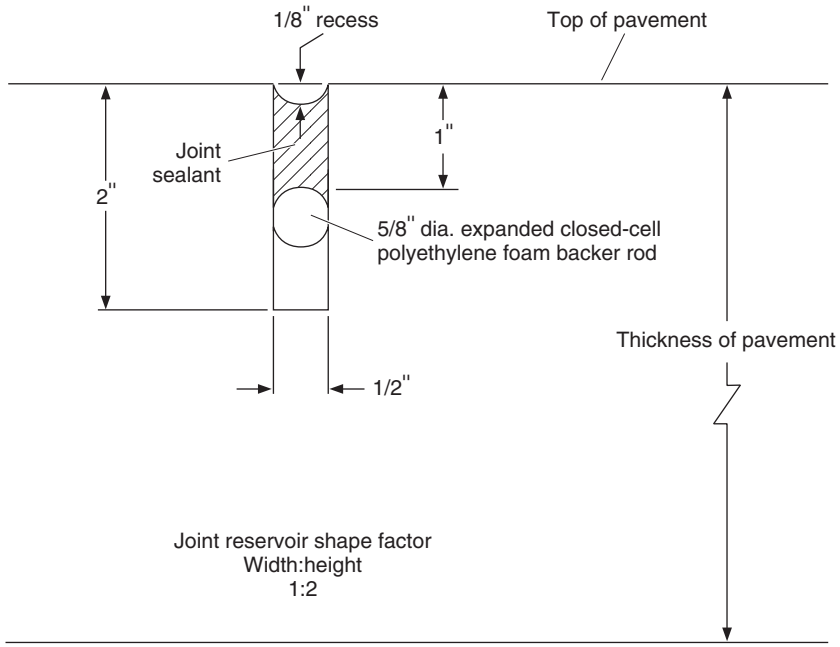

FIGURE 3.6 Typical field-formed joint seal in rigid pavement. Conversion: 1 in = 25.4 mm.

Design Guide and in various articles in this chapter. With an unsealed joint, contraction under cooler temperatures allows joint cavities to open up and become filled with sand, stone, and other incompressible material. When warmer temperatures try to expand the length of the pavement, the joints are unable to close, compressive stresses develop, and spalling may result.

The purpose of a sealant reservoir (Figs. 3.1, 3.2, and 3.6) is to prevent water and incompressibles from entering the joint cavity. The design criteria for the sealant reservoir ensure that the sealant stays in place. The ability of the sealant to expand and contract with the movement of the joint is a function of the material properties of the sealant (defined by the manufacturer's specifications) and the expected movement of the joint. Joint movement can be calculated using the following relationship:

$$\Delta L = CL(A\ \Delta T + Z) \tag{3.3}$$

where ΔL = joint opening created by changes in temperature and loss of moisture during curing (joint movement), ft (mm)
C = constant used to adjust for friction between bottom of slab and the material that directly supports the pavement (0.65 for granular material, 0.80 for stabilized material)
L = joint spacing, ft (mm)

www.EngineeringEBooksPdf.com

A = thermal coefficient of concrete, 10^{-6}/°F (10^{-6}/°C), multiplied by the following factors depending on coarse aggregate type: quartz, 6.6 (11.9); sandstone, 6.5 (11.7); gravel 6.0 (10.8); granite, 5.3 (9.5); basalt, 4.8 (8.6); and limestone 3.8 (6.8)

ΔT = difference in minimum temperature pavement will be subjected to and temperature at which pavement was placed, °F (°C)

Z = drying shrinkage coefficient of the portland cement concrete (PCC) slab, in/in (mm/mm). The coefficient depends on the indirect tensile strength, lb/in^2 (MPa) as follows: 0.0008 for 300 (2.1), 0.0006 for 400 (2.8), 0.00045 for 500 (3.4), 0.0003 for 600 (4.1), 0.0002 for 700 (4.8)

(See "AASHTO Design Procedures for New Pavements," FHWA Report HI-94-023, ERES Consultants, Inc., February 1994; and FHWA Technical Advisory T 5040.30, November 30, 1990.)

There are two categories of joint sealants. The field-molded sealant and the preformed compression seal are used extensively in rigid pavements. Also, field-molded sealants are gaining acceptance and being used in flexible pavements.

For field-molded sealants, the design is very simple and is controlled by the following relationship:

$$W = \frac{\Delta L}{S} \tag{3.4}$$

where ΔL = joint opening to be accomodated, in (mm)

W = design width of transverse contraction joint, in (mm)

S = allowable strain specified by sealant manufacturer (typically 25 to 50 percent for field-molded sealants)

To control the strain in field-molded sealants, manufacturers recommend a reservoir shape factor (width to depth), and the use of a backer rod as illustrated in Fig. 3.6. The purpose of the backer rod is to prevent bond at the bottom of the sealant reservoir where the actual crack in the pavement exists. It is at this crack that the greatest strain will occur. Typical joint sealants are either asphalt-based or silicone-based.

For preformed compression seals, the uncompressed width of the compression seal should be chosen according to manufacturer's specifications, as the material response characteristics are of primary importance. The calculated movement of the joint, normalized by the width of the uncompressed seal, should be less than or equal to the allowable movement of the compression seal, as determined by the manufacturer. Figure 3.7 shows a typical preformed seal installed in a pavement joint.

3.1.4 Continuously Reinforced Rigid Pavement

As the name implies, continuously reinforced concrete (CRC) pavement is a rigid pavement constructed with continuous longitudinal reinforcement. No transverse joints are installed. Instead, the pavement is allowed to develop random transverse cracks, and the steel reinforcement holds the cracked sections together. The size and spacing of the cracks are influenced by the percentage of reinforcing steel used. Current practice calls for 0.6 to 0.7 percent of the slab cross-section area. The design of the reinforcement is covered in the AASHTO *Pavement Design Guide*. The thickness of the slab is determined the same way as for other concrete pavements.

www.EngineeringEBooksPdf.com

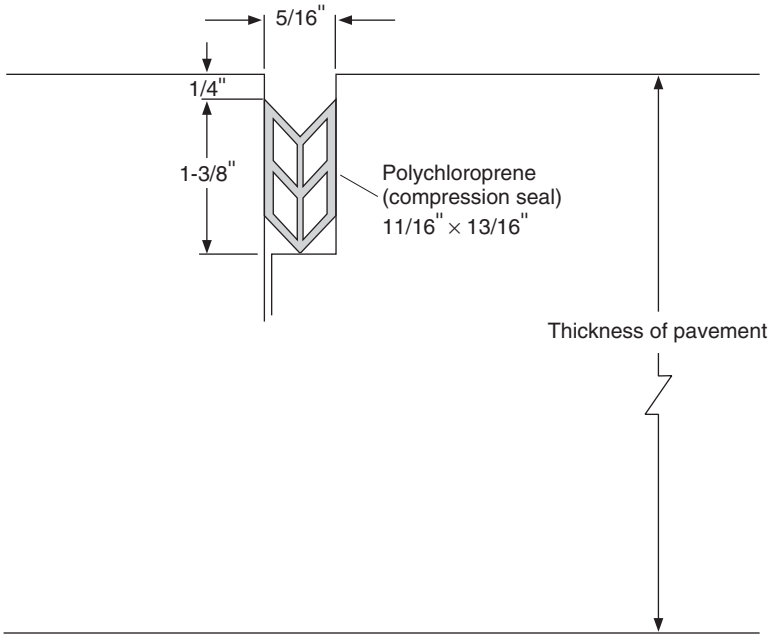

FIGURE 3.7 Typical preformed joint seal in rigid pavement. Conversion: 1 in = 25.4 mm.

3.2 FLEXIBLE PAVEMENT

Asphalt concrete pavement, also referred to as *flexible pavement,* is a mixture of sand, aggregate, a filler material, and asphalt cement combined in a controlled process, placed, and compacted. The filler material can range from quarry crushing dust and asphalt-plant baghouse fines to wood fibers (cellulose). There are many additives that can be used in asphalt concrete mixes to encourage thicker cement coatings, more elastic mixes, stiffer mixes, and less temperature-sensitive mixes. Flexible pavements can be of a type constructed on a prepared subgrade, which is called *full-depth asphalt concrete pavement* (*FDACP*), or of a type built on an untreated granular base, which is not as carefully identified by the industry but is referred to herein as *deep-strength asphalt concrete pavement* (*DSACP*). (See Arts. 1.5.3 and 1.5.5.)

Flexible pavements are designed to bend and rebound with the subgrade. The design concept is to place sufficient layers of base and intermediate courses of pavement so as to control the strains in the subgrade so that no permanent deflections result. Loading of an asphalt pavement requires the stiffest layers to be placed at the surface with successively weaker layers down to the subgrade. The types and thicknesses of subbase materials placed above the subgrade should be selected with consideration of the strength of the subgrade. Very weak subgrades, after compaction, can lose compaction when very stiff aggregate bases are placed above. It is often advantageous to place a granular subbase, which is much weaker than an aggregate base, above weak subgrades to ensure that compaction is sustained. Most, if not all, flexible pavement design procedures are based on a combination of elastic layer theory and experience. The elastic layer theory is used to calculate strains in each of the layers so as to ensure that excessive deflections will not

www.EngineeringEBooksPdf.com

occur. The experience is related to performance parameters that predict the number of times the pavement can bend (loadings) until cracking results.

3.3 COMPOSITE PAVEMENT (OVERLAYS)

Rigid pavement constructed with an asphalt overlay is referred to as *composite pavement.* The advantage of constructing an asphalt overlay on a rigid pavement is solely in the areas of ridability and noise. Rigid pavements are considered by most to create more road noise inside a vehicle than flexible pavements. This phenomenon is largely due to the surface texture specified for rigid pavements to ensure proper skid resistance. By specifying an asphalt overlay with the rigid base, surface texture requirements can be relaxed and noise can be reduced.

There are few documented composite pavement design procedures available to determine the proper thickness ratios between the rigid base thickness and the flexible surface thickness. One way to determine an equivalent composite thickness buildup can be done using elastic layer theory. A convenient computer program called ELSYM5 (public domain) can be used for analysis of different layer combinations, provided the designer is willing to make some assumptions. By accepting the assumptions, the designer is getting results that are only approximate but relative. ELSYM5 is based on elastic layer theory, which is not entirely appropriate for rigid pavement, since rigid pavement is not continuous, isotropic, and homogeneous in all directions. The procedure involves calculating the required rigid slab thickness for the conditions present where the composite pavement will be constructed. This is done using the AASHTO *Pavement Design Guide* or another method. The second step is to analyze the required rigid slab using ELSYM5 under the conditions designed for by calculating the deflections, strains, or stresses predicted under the maximum legal loading configuration. Finally, using a trial-and-error procedure, replace up to 3 in (75 mm) of the rigid slab with enough thickness of asphalt to achieve the same deflections under the same loading scheme. A rule of thumb is to replace the first 1 in (25 mm) of slab thickness with 3 in (75 mm) of asphalt concrete. However, there is not a linear relationship of 1 in (25 mm) of PCC to 3 in (75 mm) asphalt concrete; for additional reductions in the rigid slab thickness, the elastic layer theory is relied upon to calculate equivalent deflections.

Because a composite pavement behaves more like a rigid pavement, special treatment is required for the transverse joints. Reflective cracking, cracks that propagate from the rigid pavement joint through the asphalt overlay, can be an intolerable distress which induces a rough riding pavement. The reflective crack allows water to enter, which induces stripping in the asphalt and slow deterioration into a spalled pothole. The suggested treatment to counter the reflective cracking is to saw and seal the asphalt concrete overlay directly above the concrete joint. The joints should be sawed as soon as the asphalt overlay is placed, and the joint sealant reservoir should be constructed the same way as discussed previously. Figure 3.8 shows a joint in a composite pavement that has been properly sawed and sealed.

3.4 DEVELOPMENT OF AASHTO PAVEMENT DESIGN EQUATIONS

Perhaps the most widely used pavement design method in the United States and throughout the world is that presented in the AASHTO *Guide for Design of Pavement Structures.* A long history of pavement studies has led to the current (1993 with 1998 supplement) edition.

www.EngineeringEBooksPdf.com

FIGURE 3.8 Joint in composite pavement that has been sawed and sealed.

The developments leading to the current AASHTO design procedure began with the Bates Experimental Road, which was constructed in 1922 near Springfield, Illinois. The purpose of the experimental road was to determine what factors affected pavement performance. The researchers found that pavement performance could be correlated with truck loading. No further major research was conducted over the ensuing 25 years.

The changes in truck configuration and expansion of the highway network resulting from World War II brought pavement performance to the forefront again. In 1949, the Council of State Governments held a meeting in Columbus, Ohio. At this meeting, highway officials decided there was a "need for more factual data concerning the effects of axle loads of various magnitudes on pavements." The effort to advance the science of pavement design was led by the American Association of State Highway Officials (AASHO, which later became AASHTO). The regional AASHO associations decided to construct test pavements in each region. The first of these test roads was constructed by the Southeastern AASHO states. Named Road Test One, two test loops were constructed in 1950 near La Plata, Maryland, each loop containing two 12-ft-wide (3.7-m) pavement lanes. All sections constructed were concrete with a pavement thickness of 7 in (178 mm) thickening to 9 in (229 mm) at the edge of the pavement. Each lane of a loop carried only one loading and axle configuration.

A second regional test road was constructed by the Western Association of State Highway Organizations (WASHO). Named the WASHO Road Test, two test loops were constructed in 1952 near Malad, Idaho, each consisting of two 12-ft (3.7-m) lanes. All pavement was comprised of asphalt concrete on a crushed aggregate base, constructed on subbases from 0 to 16 in (406 mm) thick. Each lane of a loop carried only one loading and axle configuration. Because of the limited number of sections constructed in Maryland and Idaho, a rational design procedure could not be developed.

In 1951, support was growing within AASHO for an expanded road test. This led to the construction of the AASHO Road Test near Ottawa, Illinois, which contained six

www.EngineeringEBooksPdf.com

loops with two 12-ft (3.7-m) lanes. The AASHO Road Test contained 468 asphalt sections and 368 concrete sections. Each lane of a loop carried only one loading and axle configuration. A total of 1,114,000 load applications were applied over a 2-year period.

The rigid pavements in the AASHO Road Test were concrete slabs ranging in thickness from 2½ to 12½ in (63 to 317 mm) thick. The slabs were placed either on a granular subbase or directly on the subgrade. Flexible pavements at the AASHO Road Test consisted of asphalt pavements placed on a base and/or subbase. As confirmed by these tests, rigid pavements carry traffic loads through beam action whereas flexible pavements carry traffic loads by spreading the stress through the underlying layers.

Unpublished preliminary results from the road test were released to the states in 1961 and 1962. The AASHO *Interim Guide for Design of Pavement Structures* was published in 1972. Chapter 3 of the interim guide was revised in 1981. The first edition of the AASHTO *Guide for Design of Pavement Structures* (1986) introduced many new concepts including the reliability concept. It was published in two volumes, the first giving design procedures and the second providing documentation and explanatory information. The second edition of the guide was published in 1993 and a supplement in 1998.

3.4.1 Mechanistic-Empirical Pavement Design

AASHTO has given interim approval for a new approach to pavement design as described in the AASHTO *Interim Mechanistic-Empirical Pavement Design Guide Manual of Practice*. Several years in development, this M-E pavement design guide and the accompanying software should provide a significant advancement in pavement performance prediction. As its title implies, mechanistic-empirical models are used to analyze input data for traffic, climate, materials, and the proposed pavement structure, and then to estimate pavement service life damage. The distress prediction models have been calibrated to national averages based on data gathered by the Long-Term Pavement Performance program. However, for the distress models to be fully applicable for the particular materials, construction practices, and environmental conditions in a given region, they must be calibrated with local data. The program can best be used by knowledgeable practitioners as application experience is gained. The traditional methods are the focus of this handbook.

3.5 PARAMETERS FOR AASHTO PAVEMENT DESIGN

The AASHTO pavement design equations have some variables that are common to both rigid and flexible pavements, including serviceability, traffic loading, reliability, overall standard deviation, and roadbed soil resilient modulus. These parameters are discussed in the following articles. Subsequently, the design procedure is presented for rigid pavements in Art. 3.6 and for flexible pavements in Art. 3.7.

3.5.1 Serviceability

The AASHTO design equations are developed around the concept of serviceability, which serves as the pavement performance parameter by which a pavement's condition is valued. *Present serviceability* is defined as the momentary ability of a pavement to serve traffic. The present serviceability rating (PSR) was developed to measure serviceability. PSR is a rating of pavement ride based on a scale of 0, for impassible, to 5, for perfect. For the development of the original AASHO equation, individuals (the raters)

www.EngineeringEBooksPdf.com

would ride the pavements and assign a PSR value. To avoid riding and rating every pavement to determine serviceability, a relationship is usually developed between PSR and measurable pavement attributes. The value determined by this relationship is called the *present serviceability index* (*PSI*). At the AASHO Road Test, the PSI was derived to be related to slope variance, cracking, and patching for concrete pavements, and to slope variance, rutting, cracking, and patching for asphalt pavements. The relationship between pavement thickness and serviceability index is defined by the AASHTO pavement design equations.

3.5.2 Traffic Loading

Perhaps the most important step in designing a pavement is the estimation of the design traffic. Overestimation of the design traffic results in a thicker pavement than necessary with associated higher costs. Underestimation of traffic results in a thin pavement that will fail prematurely, resulting in higher maintenance and user costs. If the proposed pavement will be used to replace an existing pavement, the design traffic could be a projection of the existing traffic. If the proposed pavement is a new location, the design traffic will have to be estimated on the basis of the proposed use of the pavement. For design purposes, all traffic is equated to an equivalent 18-kip (80-kN) single-axle load, or ESAL. Each vehicle in the expected design traffic volume is converted to an ESAL by an equivalency factor. The equivalency factor is a function of the axle loading, pavement thickness, axle configuration, and terminal serviceability. As discussed in Art. 3.6, the terminal serviceability is an index of the serviceability of a pavement immediately before rehabilitation is needed.

The equivalency factors as given by the AASHTO *Pavement Design Guide* are presented here for flexible pavements in Tables 3.1 through 3.9, and for rigid pavements in Tables 3.10 through 3.18. For each pavement type, the tables are arranged by axle configuration and terminal serviceability p_t. Factors are included for single-axle, tandem-axle, and triple-axle configurations, and for p_t values of 2.0, 2.5, and 3.0. In the tables for flexible pavements, the pavement strength is characterized by a pavement structural number (SN), which is defined in Art. 3.7. The use of the tables is illustrated by the following example.

Consider a 30,000-lb (133-kN) transit bus that has a single front axle load of 10,000 lb (44 kN) and a tandem rear axle load of 20,000 lb (89 kN). Before the ESAL can be determined, the pavement thickness or structural number must be known, as well as the terminal serviceability. In an initial design, this necessitates assumptions, and very likely an iteration after the thickness or structural number has initially been determined. In this example, the ESAL is to be determined for a rigid pavement 7 in (178 mm) thick and for a flexible pavement with a pavement structural number of 4. The p_t is taken as 2.5. The tables show that, for this case, the equivalency factor for rigid pavement is 0.089 for the front axle (Table 3.13) and 0.220 for the rear axle (Table 3.14). The equivalency factor for flexible pavement is 0.102 for the front axle (Table 3.4) and 0.141 for the rear axle (Table 3.5). Each bus equals $0.089 + 0.220 = 0.309$ ESAL for rigid pavement and $0.102 + 0.141 = 0.243$ ESAL for flexible pavement. A similar analysis would be completed for each vehicle type. A worksheet for making the calculations is provided in Table 3.19, and an example for using the worksheet is presented in Table 3.20.

The traffic supplied to the designer is usually the total traffic in both directions and all lanes. This traffic needs to be distributed by direction and lane to determine the required pavement thickness. The pavement is first divided by direction by multiplying by the directional factor. In most cases, this factor is equal to 0.5, assuming the loads are distributed equally in both directions. In some cases, the directional factor may be

www.EngineeringEBooksPdf.com

TABLE 3.1 Axle Load Equivalency Factors for Flexible Pavements, Single Axles, and p_t of 2.0

Axle load		Pavement structural number (SN)					
kips	kN	1	2	3	4	5	6
2	9	0.0002	0.0002	0.0002	0.0002	0.0002	0.0002
4	18	0.002	0.003	0.002	0.002	0.002	0.002
6	27	0.009	0.012	0.011	0.010	0.009	0.009
8	36	0.030	0.035	0.036	0.033	0.031	0.029
10	44	0.075	0.085	0.090	0.085	0.079	0.076
12	53	0.165	0.177	0.189	0.183	0.174	0.168
14	62	0.325	0.338	0.354	0.350	0.338	0.331
16	71	0.589	0.598	0.613	0.612	0.603	0.596
18	80	1.00	1.00	1.00	1.00	1.00	1.00
20	89	1.61	1.59	1.56	1.55	1.57	1.59
22	98	2.49	2.44	2.35	2.31	2.35	2.41
24	107	3.71	3.62	3.43	3.33	3.40	3.51
26	116	5.36	5.21	4.88	4.68	4.77	4.96
28	125	7.54	7.31	6.78	6.42	6.52	6.83
30	133	10.4	10.0	9.2	8.6	8.7	9.2
32	142	14.0	13.5	12.4	11.5	11.5	12.1
34	151	18.5	17.9	16.3	15.0	14.9	15.6
36	160	24.2	23.3	21.2	19.3	19.0	19.9
38	169	31.1	29.9	27.1	24.6	24.0	25.1
40	178	39.6	38.0	34.3	30.9	30.0	31.2
42	187	49.7	47.7	43.0	38.6	37.2	38.5
44	196	61.8	59.3	53.4	47.6	45.7	47.1
46	205	76.1	73.0	65.6	58.3	55.7	57.0
48	214	92.9	89.1	80.0	70.9	67.3	68.6
50	222	113.	108.	97.	86.	81.	82.

Source: *Guide for Design of Pavement Structures,* American Association of State Highway and Transportation Officials, Washington, D.C., 1993, with permission.

greater than 0.5. An example would be an industry where material is hauled in by truck and shipped out by rail. In this case, loaded trucks would be going into the plant and empty trucks would be exiting the plant. The next factor is the lane distribution factor. As more lanes are added to a section of road, the traffic will be more distributed among these lanes. However, trucks tend to use the outermost lane, so the distribution of ESALs is not in proportion to the number of lanes added. Many of the state DOTs have developed lane distribution factors for use in pavement design. The AASHTO *Pavement Design Guide* presents a range of factors used for lane distribution as given below. It should be noted that for the same traffic, the thickness design will be greater for the pavement with the smaller number of lanes.

Number of lanes in both directions	Percent of 18-kip (80-kN) ESAL traffic in design lane
1	100
2	80–100
3	60–80
4 or more	50–75

www.EngineeringEBooksPdf.com

TABLE 3.2 Axle Load Equivalency Factors for Flexible Pavements, Tandem Axles, and p_t of 2.0

Axle load		Pavement structural number (SN)					
kips	kN	1	2	3	4	5	6
2	9	0.0000	0.0000	0.0000	0.0000	0.0000	0.0000
4	18	0.0003	0.0003	0.0003	0.0002	0.0002	0.0002
6	27	0.001	0.001	0.001	0.001	0.001	0.001
8	36	0.003	0.003	0.003	0.003	0.003	0.002
10	44	0.007	0.008	0.008	0.007	0.006	0.006
12	53	0.013	0.016	0.016	0.014	0.013	0.012
14	62	0.024	0.029	0.029	0.026	0.024	0.023
16	71	0.041	0.048	0.050	0.046	0.042	0.040
18	80	0.066	0.077	0.081	0.075	0.069	0.066
20	89	0.103	0.117	0.124	0.117	0.109	0.105
22	98	0.156	0.171	0.183	0.174	0.164	0.158
24	107	0.227	0.244	0.260	0.252	0.239	0.231
26	116	0.322	0.340	0.360	0.353	0.338	0.329
28	125	0.447	0.465	0.487	0.481	0.466	0.455
30	133	0.607	0.623	0.646	0.643	0.627	0.617
32	142	0.810	0.823	0.843	0.842	0.829	0.819
34	151	1.06	1.07	1.08	1.08	1.08	1.07
36	160	1.38	1.38	1.38	1.38	1.38	1.38
38	169	1.76	1.75	1.73	1.72	1.73	1.74
40	178	2.22	2.19	2.15	2.13	2.16	2.18
42	187	2.77	2.73	2.64	2.62	2.66	2.70
44	196	3.42	3.36	3.23	3.18	3.24	3.31
46	205	4.20	4.11	3.92	3.83	3.91	4.02
48	214	5.10	4.98	4.72	4.58	4.68	4.83
50	222	6.15	5.99	5.64	5.44	5.56	5.77
52	231	7.37	7.16	6.71	6.43	6.56	6.83
54	240	8.77	8.51	7.93	7.55	7.69	8.03
56	249	10.4	10.1	9.3	8.8	9.0	9.4
58	258	12.2	11.8	10.9	10.3	10.4	10.9
60	267	14.3	13.8	12.7	11.9	12.0	12.6
62	276	16.6	16.0	14.7	13.7	13.8	14.5
64	285	19.3	18.6	17.0	15.8	15.8	16.6
66	294	22.2	21.4	19.6	18.0	18.0	18.9
68	302	25.5	24.6	22.4	20.6	20.5	21.5
70	311	29.2	28.1	25.6	23.4	23.2	24.3
72	320	33.3	32.0	29.1	26.5	26.2	27.4
74	329	37.8	36.4	33.0	30.0	29.4	30.8
76	338	42.8	41.2	37.3	33.8	33.1	34.5
78	347	48.4	46.5	42.0	38.0	37.0	38.6
80	356	54.4	52.3	47.2	42.5	41.3	43.0
82	365	61.1	58.7	52.9	47.6	46.0	47.8
84	374	68.4	65.7	59.2	53.0	51.2	53.0
86	383	76.3	73.3	66.0	59.0	56.8	58.6
88	391	85.0	81.6	73.4	65.5	62.8	64.7
90	400	94.4	90.6	81.5	72.6	69.4	71.3

Source: *Guide for Design of Pavement Structures,* American Association of State Highway and Transportation Officials, Washington, D.C., 1993, with permission.

www.EngineeringEBooksPdf.com

TABLE 3.3 Axle Load Equivalency Factors for Flexible Pavements, Triple Axles, and p_t of 2.0

Axle load		Pavement structural number (SN)					
kips	kN	1	2	3	4	5	6
2	9	0.0000	0.0000	0.0000	0.0000	0.0000	0.0000
4	18	0.0001	0.0001	0.0001	0.0001	0.0001	0.0001
6	27	0.0004	0.0004	0.0003	0.0003	0.0003	0.0003
8	36	0.0009	0.0010	0.0009	0.0008	0.0007	0.0007
10	44	0.002	0.002	0.002	0.002	0.002	0.001
12	53	0.004	0.004	0.004	0.003	0.003	0.003
14	62	0.006	0.007	0.007	0.006	0.006	0.005
16	71	0.010	0.012	0.012	0.010	0.009	0.009
18	80	0.016	0.019	0.019	0.017	0.015	0.015
20	89	0.024	0.029	0.029	0.026	0.024	0.023
22	98	0.034	0.042	0.042	0.038	0.035	0.034
24	107	0.049	0.058	0.060	0.055	0.051	0.048
26	116	0.068	0.080	0.083	0.077	0.071	0.068
28	125	0.093	0.107	0.113	0.105	0.098	0.094
30	133	0.125	0.140	0.149	0.140	0.131	0.126
32	142	0.164	0.182	0.194	0.184	0.173	0.167
34	151	0.213	0.233	0.248	0.238	0.225	0.217
36	160	0.273	0.294	0.313	0.303	0.288	0.279
38	169	0.346	0.368	0.390	0.381	0.364	0.353
40	178	0.434	0.456	0.481	0.473	0.454	0.443
42	187	0.538	0.560	0.587	0.580	0.561	0.548
44	196	0.662	0.682	0.710	0.705	0.686	0.673
46	205	0.807	0.825	0.852	0.849	0.831	0.818
48	214	0.976	0.992	1.015	1.014	0.999	0.987
50	222	1.17	1.18	1.20	1.20	1.19	1.18
52	231	1.40	1.40	1.42	1.42	1.41	1.40
54	240	1.66	1.66	1.66	1.66	1.66	1.66
56	249	1.95	1.95	1.93	1.93	1.94	1.94
58	258	2.29	2.27	2.24	2.23	2.25	2.27
60	267	2.67	2.64	2.59	2.57	2.60	2.63
62	276	3.10	3.06	2.98	2.95	2.99	3.04
64	285	3.59	3.53	3.41	3.37	3.42	3.49
66	294	4.13	4.05	3.89	3.83	3.90	3.99
68	302	4.73	4.63	4.43	4.34	4.42	4.54
70	311	5.40	5.28	5.03	4.90	5.00	5.15
72	320	6.15	6.00	5.68	5.52	5.63	5.82
74	329	6.97	6.79	6.41	6.20	6.33	6.56
76	338	7.88	7.67	7.21	6.94	7.08	7.36
78	347	8.88	8.63	8.09	7.75	7.90	8.23
80	356	9.98	9.69	9.05	8.63	8.79	9.18
82	365	11.2	10.8	10.1	9.6	9.8	10.2
84	374	12.5	12.1	11.2	10.6	10.8	11.3
86	383	13.9	13.5	12.5	11.8	11.9	12.5
88	391	15.5	15.0	13.8	13.0	13.2	13.8
90	400	17.2	16.6	15.3	14.3	14.5	15.2

Source: *Guide for Design of Pavement Structures,* American Association of State Highway and Transportation Officials, Washington, D.C., 1993, with permission.

www.EngineeringEBooksPdf.com

TABLE 3.4 Axle Load Equivalency Factors for Flexible Pavements, Single Axles, and p_t of 2.5

Axle load		Pavement structural number (SN)					
kips	kN	1	2	3	4	5	6
2	9	0.0004	0.0004	0.0003	0.0002	0.0002	0.0002
4	18	0.003	0.004	0.004	0.003	0.002	0.002
6	27	0.011	0.017	0.017	0.013	0.010	0.009
8	36	0.032	0.047	0.051	0.041	0.034	0.031
10	44	0.078	0.102	0.118	0.102	0.088	0.080
12	53	0.168	0.198	0.229	0.213	0.189	0.176
14	62	0.328	0.358	0.399	0.388	0.360	0.342
16	71	0.591	0.613	0.646	0.645	0.623	0.606
18	80	1.00	1.00	1.00	1.00	1.00	1.00
20	89	1.61	1.57	1.49	1.41	1.51	1.55
22	98	2.48	2.38	2.17	2.09	2.18	2.30
24	107	3.69	3.49	3.09	2.89	3.03	3.27
26	116	5.33	4.99	4.31	3.91	4.09	4.48
28	125	7.49	6.98	5.90	5.21	5.39	5.98
30	133	10.3	9.5	7.9	6.8	7.0	7.8
32	142	13.9	12.8	10.5	8.8	8.9	10.0
34	151	18.4	16.9	13.7	11.3	11.2	12.5
36	160	24.0	22.0	17.7	14.4	13.9	15.5
38	169	30.9	28.3	22.6	18.1	17.2	19.0
40	178	39.3	35.9	28.5	22.5	21.1	23.0
42	187	49.3	45.0	35.6	27.8	25.6	27.7
44	196	61.3	55.9	44.0	34.0	31.0	33.1
46	205	75.5	68.8	54.0	41.4	37.2	39.3
48	214	92.2	83.9	65.7	50.1	44.5	46.5
50	222	112.	102.	79.	60.	53.	55.

Source: *Guide for Design of Pavement Structures,* American Association of State Highway and Transportation Officials, Washington, D.C., 1993, with permission.

Abbreviated procedures for determining ESALs have been developed by several states. These procedures usually involve grouping classifications of trucks into several categories and assigning an average equivalency factor to these categories. For example, Ohio groups trucks into two categories, single, or C units, and tractor-trailer, or B combinations. The average equivalency factors used by Ohio for these two categories are shown in Table 3.21.

3.5.3 Reliability and Overall Standard Deviation

Rarely does the actual traffic loading to failure equal the predicted traffic loading; the difference is due to the deviations that exist. These deviations include (1) lack of fit of the AASHTO design equations, since these are empirical equations; (2) variations in construction, which cause variations in the equation input factors such as the strength and thickness of pavement layers; and (3) variations in the predicted traffic (see App. EE of Vol. 2 of the AASHTO *Guide for Design of Pavement Structures,* August 1986 edition). The AASHTO equations account for these variations by multiplying the predicted traffic by a safety factor. The safety factor is determined by the reliability desired and

www.EngineeringEBooksPdf.com

TABLE 3.5 Axle Load Equivalency Factors for Flexible Pavements, Tandem Axles, and p_t of 2.5

Axle load		Pavement structural number (SN)					
kips	kN	1	2	3	4	5	6
2	9	0.0001	0.0001	0.0001	0.0000	0.0000	0.0000
4	18	0.0005	0.0005	0.0004	0.0003	0.0003	0.0002
6	27	0.002	0.002	0.002	0.001	0.001	0.001
8	36	0.004	0.006	0.005	0.004	0.003	0.003
10	44	0.008	0.013	0.011	0.009	0.007	0.006
12	53	0.015	0.024	0.023	0.018	0.014	0.013
14	62	0.026	0.041	0.042	0.033	0.027	0.024
16	71	0.044	0.065	0.070	0.057	0.047	0.043
18	80	0.070	0.097	0.109	0.092	0.077	0.070
20	89	0.107	0.141	0.162	0.141	0.121	0.110
22	98	0.160	0.198	0.229	0.207	0.180	0.166
24	107	0.231	0.273	0.315	0.292	0.260	0.242
26	116	0.327	0.370	0.420	0.401	0.364	0.342
28	125	0.451	0.493	0.548	0.534	0.495	0.470
30	133	0.611	0.648	0.703	0.695	0.658	0.633
32	142	0.813	0.843	0.889	0.887	0.857	0.834
34	151	1.06	1.08	1.11	1.11	1.09	1.08
36	160	1.38	1.38	1.38	1.38	1.38	1.38
38	169	1.75	1.73	1.69	1.68	1.70	1.73
40	178	2.21	2.16	2.06	2.03	2.08	2.14
42	187	2.76	2.67	2.49	2.43	2.51	2.61
44	196	3.41	3.27	2.99	2.88	3.00	3.16
46	205	4.18	3.98	3.58	3.40	3.55	3.79
48	214	5.08	4.80	4.25	3.98	4.17	4.49
50	222	6.12	5.76	5.03	4.64	4.86	5.28
52	231	7.33	6.87	5.93	5.38	5.63	6.17
54	240	8.72	8.14	6.95	6.22	6.47	7.15
56	249	10.3	9.6	8.1	7.2	7.4	8.2
58	258	12.1	11.3	9.4	8.2	8.4	9.4
60	267	14.2	13.1	10.9	9.4	9.6	10.7
62	276	16.5	15.3	12.6	10.7	10.8	12.1
64	285	19.1	17.6	14.5	12.2	12.2	13.7
66	294	22.1	20.3	16.6	13.8	13.7	15.4
68	302	25.3	23.3	18.9	15.6	15.4	17.2
70	311	29.0	26.6	21.5	17.6	17.2	19.2
72	320	33.0	30.3	24.4	19.8	19.2	21.3
74	329	37.5	34.4	27.6	22.2	21.3	23.6
76	338	42.5	38.9	31.1	24.8	23.7	26.1
78	347	48.0	43.9	35.0	27.8	26.2	28.8
80	356	54.0	49.4	39.2	30.9	29.0	31.7
82	365	60.6	55.4	43.9	34.4	32.0	34.8
84	374	67.8	61.9	49.0	38.2	35.3	38.1
86	383	75.7	69.1	54.5	42.3	38.8	41.7
88	391	84.3	76.9	60.6	46.8	42.6	45.6
90	400	93.7	85.4	67.1	51.7	46.8	49.7

Source: *Guide for Design of Pavement Structures,* American Association of State Highway and Transportation Officials, Washington, D.C., 1993, with permission.

www.EngineeringEBooksPdf.com

TABLE 3.6 Axle Load Equivalency Factors for Flexible Pavements, Triple Axles, and p_t of 2.5

Axle load		Pavement structural number (SN)					
kips	kN	1	2	3	4	5	6
2	9	0.0000	0.0000	0.0000	0.0000	0.0000	0.0000
4	18	0.0002	0.0002	0.0002	0.0001	0.0001	0.0001
6	27	0.0006	0.0007	0.0005	0.0004	0.0003	0.0003
8	36	0.001	0.002	0.001	0.001	0.001	0.001
10	44	0.003	0.004	0.003	0.002	0.002	0.002
12	53	0.005	0.007	0.006	0.004	0.003	0.003
14	62	0.008	0.012	0.010	0.008	0.006	0.006
16	71	0.012	0.019	0.018	0.013	0.011	0.010
18	80	0.018	0.029	0.028	0.021	0.017	0.016
20	89	0.027	0.042	0.042	0.032	0.027	0.024
22	98	0.038	0.058	0.060	0.048	0.040	0.036
24	107	0.053	0.078	0.084	0.068	0.057	0.051
26	116	0.072	0.103	0.114	0.095	0.080	0.072
28	125	0.098	0.133	0.151	0.128	0.109	0.099
30	133	0.129	0.169	0.195	0.170	0.145	0.133
32	142	0.169	0.213	0.247	0.220	0.191	0.175
34	151	0.219	0.266	0.308	0.281	0.246	0.228
36	160	0.279	0.329	0.379	0.352	0.313	0.292
38	169	0.352	0.403	0.461	0.436	0.393	0.368
40	178	0.439	0.491	0.554	0.533	0.487	0.459
42	187	0.543	0.594	0.661	0.644	0.597	0.567
44	196	0.666	0.714	0.781	0.769	0.723	0.692
46	205	0.811	0.854	0.918	0.911	0.868	0.838
48	214	0.979	1.015	1.072	1.069	1.033	1.005
50	222	1.17	1.20	1.24	1.25	1.22	1.20
52	231	1.40	1.41	1.44	1.44	1.43	1.41
54	240	1.66	1.66	1.66	1.66	1.66	1.66
56	249	1.95	1.93	1.90	1.90	1.91	1.93
58	258	2.29	2.25	2.17	2.16	2.20	2.24
60	267	2.67	2.60	2.48	2.44	2.51	2.58
62	276	3.09	3.00	2.82	2.76	2.85	2.95
64	285	3.57	3.44	3.19	3.10	3.22	3.36
66	294	4.11	3.94	3.61	3.47	3.62	3.81
68	302	4.71	4.49	4.06	3.88	4.05	4.30
70	311	5.38	5.11	4.57	4.32	4.52	4.84
72	320	6.12	5.79	5.13	4.80	5.03	5.41
74	329	6.93	6.54	5.74	5.32	5.57	6.04
76	338	7.84	7.37	6.41	5.88	6.15	6.71
78	347	8.83	8.28	7.14	6.49	6.78	7.43
80	356	9.92	9.28	7.95	7.15	7.45	8.21
82	365	11.1	10.4	8.8	7.9	8.2	9.0
84	374	12.4	11.6	9.8	8.6	8.9	9.9
86	383	13.8	12.9	10.8	9.5	9.8	10.9
88	391	15.4	14.3	11.9	10.4	10.6	11.9
90	400	17.1	15.8	13.2	11.3	11.6	12.9

Source: *Guide for Design of Pavement Structures,* American Association of State Highway and Transportation Officials, Washington, D.C., 1993, with permission.

www.EngineeringEBooksPdf.com

TABLE 3.7 Axle Load Equivalency Factors for Flexible Pavements, Single Axles, and p_t of 3.0

Axle load		Pavement structural number (SN)					
kips	kN	1	2	3	4	5	6
2	9	0.0008	0.0009	0.0006	0.0003	0.0002	0.0002
4	18	0.004	0.008	0.006	0.004	0.002	0.002
6	27	0.014	0.030	0.028	0.018	0.012	0.010
8	36	0.035	0.070	0.080	0.055	0.040	0.034
10	44	0.082	0.132	0.168	0.132	0.101	0.086
12	53	0.173	0.231	0.296	0.260	0.212	0.187
14	62	0.332	0.388	0.468	0.447	0.391	0.358
16	71	0.594	0.633	0.695	0.693	0.651	0.622
18	80	1.00	1.00	1.00	1.00	1.00	1.00
20	89	1.60	1.53	1.41	1.38	1.44	1.51
22	98	2.47	2.29	1.96	1.83	1.97	2.16
24	107	3.67	3.33	2.69	2.39	2.60	2.96
26	116	5.29	4.72	3.65	3.08	3.33	3.91
28	125	7.43	6.56	4.88	3.93	4.17	5.00
30	133	10.2	8.9	6.5	5.0	5.1	6.3
32	142	13.8	12.0	8.4	6.2	6.3	7.7
34	151	18.2	15.7	10.9	7.8	7.6	9.3
36	160	23.8	20.4	14.0	9.7	9.1	11.0
38	169	30.6	26.2	17.7	11.9	11.0	13.0
40	178	38.8	33.2	22.2	14.6	13.1	15.3
42	187	48.8	41.6	27.6	17.8	15.5	17.8
44	196	60.6	51.6	34.0	21.6	18.4	20.6
46	205	74.7	63.4	41.5	26.1	21.6	23.8
48	214	91.2	77.3	50.3	31.3	25.4	27.4
50	222	110.	94.	61.	37.	30.	32.

Source: *Guide for Design of Pavement Structures,* American Association of State Highway and Transportation Officials, Washington, D.C., 1993, with permission.

the amount of total variation or the overall standard deviation. AASHTO recommends the following reliability based on the functional classification of the road:

	Recommended level of reliability	
Functional classification	Urban	Rural
Interstate/freeway	85–99.9	80–99.9
Principal arterials	80–99	75–95
Collectors	80–95	75–95
Local	50–80	50–80

Overall standard deviation values recommended by AASHTO are 0.30 to 0.40 for rigid pavements and 0.40 to 0.50 for flexible pavements. The lower values are more appropriate when traffic predictions are more reliable. Values derived from the AASHTO Road Test are 0.39 for rigid pavements and 0.49 for flexible pavements.

www.EngineeringEBooksPdf.com

TABLE 3.8 Axle Load Equivalency Factors for Flexible Pavements, Tandem Axles, and p_t of 3.0

Axle load		Pavement structural number (SN)					
kips	kN	1	2	3	4	5	6
2	9	0.0002	0.0002	0.0001	0.0001	0.0000	0.0000
4	18	0.001	0.001	0.001	0.000	0.000	0.000
6	27	0.003	0.004	0.003	0.002	0.001	0.001
8	36	0.006	0.011	0.009	0.005	0.003	0.003
10	44	0.011	0.024	0.020	0.012	0.008	0.007
12	53	0.019	0.042	0.039	0.024	0.017	0.014
14	62	0.031	0.066	0.068	0.045	0.032	0.026
16	71	0.049	0.096	0.109	0.076	0.055	0.046
18	80	0.075	0.134	0.164	0.121	0.090	0.076
20	89	0.113	0.181	0.232	0.182	0.139	0.119
22	98	0.166	0.241	0.313	0.260	0.205	0.178
24	107	0.238	0.317	0.407	0.358	0.292	0.257
26	116	0.333	0.413	0.517	0.476	0.402	0.360
28	125	0.457	0.534	0.643	0.614	0.538	0.492
30	133	0.616	0.684	0.788	0.773	0.702	0.656
32	142	0.817	0.870	0.956	0.953	0.896	0.855
34	151	1.07	1.10	1.15	1.15	1.12	1.09
36	160	1.38	1.38	1.38	1.38	1.38	1.38
38	169	1.75	1.71	1.64	1.62	1.66	1.70
40	178	2.21	2.11	1.94	1.89	1.98	2.08
42	187	2.75	2.59	2.29	2.19	2.33	2.50
44	196	3.39	3.15	2.70	2.52	2.71	2.97
46	205	4.15	3.81	3.16	2.89	3.13	3.50
48	214	5.04	4.58	3.70	3.29	3.57	4.07
50	222	6.08	5.47	4.31	3.74	4.05	4.70
52	231	7.27	6.49	5.01	4.24	4.57	5.37
54	240	8.65	7.67	5.81	4.79	5.13	6.10
56	249	10.2	9.0	6.7	5.4	5.7	6.9
58	258	12.0	10.6	7.7	6.1	6.4	7.7
60	267	14.1	12.3	8.9	6.8	7.1	8.6
62	276	16.3	14.2	10.2	7.7	7.8	9.5
64	285	18.9	16.4	11.6	8.6	8.6	10.5
66	294	21.8	18.9	13.2	9.6	9.5	11.6
68	302	25.1	21.7	15.0	10.7	10.5	12.7
70	311	28.7	24.7	17.0	12.0	11.5	13.9
72	320	32.7	28.1	19.2	13.3	12.6	15.2
74	329	37.2	31.9	21.6	14.8	13.8	16.5
76	338	42.1	36.0	24.3	16.4	15.1	17.9
78	347	47.5	40.6	27.3	18.2	16.5	19.4
80	356	53.4	45.7	30.5	20.1	18.0	21.0
82	365	60.0	51.2	34.0	22.2	19.6	22.7
84	374	67.1	57.2	37.9	24.6	21.3	24.5
86	383	74.9	63.8	42.1	27.1	23.2	26.4
88	391	83.4	71.0	46.7	29.8	25.2	28.4
90	400	92.7	78.8	51.7	32.7	27.4	30.5

Source: *Guide for Design of Pavement Structures,* American Association of State Highway and Transportation Officials, Washington, D.C., 1993, with permission.

www.EngineeringEBooksPdf.com

TABLE 3.9 Axle Load Equivalency Factors for Flexible Pavements, Triple Axles, and p_t of 3.0

Axle load		Pavement structural number (SN)					
kips	kN	1	2	3	4	5	6
2	9	0.0001	0.0001	0.0001	0.0000	0.0000	0.0000
4	18	0.0005	0.0004	0.0003	0.0002	0.0001	0.0001
6	27	0.001	0.001	0.001	0.001	0.000	0.000
8	36	0.003	0.004	0.002	0.001	0.001	0.001
10	44	0.005	0.008	0.005	0.003	0.002	0.002
12	53	0.007	0.014	0.010	0.006	0.004	0.003
14	62	0.011	0.023	0.018	0.011	0.007	0.006
16	71	0.016	0.035	0.030	0.018	0.013	0.010
18	80	0.022	0.050	0.047	0.029	0.020	0.017
20	89	0.031	0.069	0.069	0.044	0.031	0.026
22	98	0.043	0.090	0.097	0.065	0.046	0.039
24	107	0.059	0.116	0.132	0.092	0.066	0.056
26	116	0.079	0.145	0.174	0.126	0.092	0.078
28	125	0.104	0.179	0.223	0.168	0.126	0.107
30	133	0.136	0.218	0.279	0.219	0.167	0.143
32	142	0.176	0.265	0.342	0.279	0.218	0.188
34	151	0.226	0.319	0.413	0.350	0.279	0.243
36	160	0.286	0.382	0.491	0.432	0.352	0.310
38	169	0.359	0.456	0.577	0.524	0.437	0.389
40	178	0.447	0.543	0.671	0.626	0.536	0.483
42	187	0.550	0.643	0.775	0.740	0.649	0.593
44	196	0.673	0.760	0.889	0.865	0.777	0.720
46	205	0.817	0.894	1.014	1.001	.920	.865
48	214	0.984	1.048	1.152	1.148	1.080	1.030
50	222	1.18	1.23	1.30	1.31	1.26	1.11
52	231	1.40	1.43	1.47	1.48	1.45	1.43
54	240	1.66	1.66	1.66	1.66	1.66	1.66
56	249	1.95	1.92	1.86	1.85	1.88	1.91
58	258	2.28	2.21	2.09	2.06	2.13	2.20
60	267	2.66	2.54	2.34	2.28	2.39	2.50
62	276	3.08	2.92	2.61	2.52	2.66	2.84
64	285	3.56	3.33	2.92	2.77	2.96	3.19
66	294	4.09	3.79	3.25	3.04	3.27	3.58
68	302	4.68	4.31	3.62	3.33	3.60	4.00
70	311	5.34	4.88	4.02	3.64	3.94	4.44
72	320	6.08	5.51	4.46	3.97	4.31	4.91
74	329	6.89	6.21	4.94	4.32	4.69	5.40
76	338	7.78	6.98	5.47	4.70	5.09	5.93
78	347	8.76	7.83	6.04	5.11	5.51	6.48
80	356	9.84	8.75	6.67	5.54	5.96	7.06
82	365	11.0	9.8	7.4	6.0	6.4	7.7
84	374	12.3	10.9	8.1	6.5	6.9	8.3
86	383	13.7	12.1	8.9	7.0	7.4	9.0
88	391	15.3	13.4	9.8	7.6	8.0	9.6
90	400	16.9	14.8	10.7	8.2	8.5	10.4

Source: *Guide for Design of Pavement Structures,* American Association of State Highway and Transportation Officials, Washington, D.C., 1993, with permission.

www.EngineeringEBooksPdf.com

TABLE 3.10 Axle Load Equivalency Factors for Rigid Pavements, Single Axles, and p_t of 2.0

Axle load		Slab thickness D, in								
kips	kN	6	7	8	9	10	11	12	13	14
2	9	0.0002	0.0002	0.0002	0.0002	0.0002	0.0002	0.0002	0.0002	0.0002
4	18	0.002	0.002	0.002	0.002	0.002	0.002	0.002	0.002	0.002
6	27	0.011	0.010	0.010	0.010	0.010	0.010	0.010	0.010	0.010
8	36	0.035	0.033	0.032	0.032	0.032	0.032	0.032	0.032	0.032
10	44	0.087	0.084	0.082	0.081	0.080	0.080	0.080	0.080	0.080
12	53	0.186	0.180	0.176	0.175	0.174	0.174	0.173	0.173	0.173
14	62	0.353	0.346	0.341	0.338	0.337	0.336	0.336	0.336	0.336
16	71	0.614	0.609	0.604	0.601	0.599	0.599	0.598	0.598	0.598
18	80	1.00	1.00	1.00	1.00	1.00	1.00	1.00	1.00	1.00
20	89	1.55	1.56	1.57	1.58	1.58	1.59	1.59	1.59	1.59
22	98	2.32	2.32	2.35	2.38	2.40	2.41	2.41	2.41	2.42
24	107	3.37	3.34	3.40	3.47	3.51	3.53	3.54	3.55	3.55
26	116	4.76	4.69	4.77	4.88	4.97	5.02	5.04	5.06	5.06
28	125	6.58	6.44	6.52	6.70	6.85	6.94	7.00	7.02	7.04
30	133	8.92	8.68	8.74	8.98	9.23	9.39	9.48	9.54	9.56
32	142	11.9	11.5	11.5	11.8	12.2	12.4	12.6	12.7	12.7
34	151	15.5	15.0	14.9	15.3	15.8	16.2	16.4	16.6	16.7
36	160	20.1	19.3	19.2	19.5	20.1	20.7	21.1	21.4	21.5
38	169	25.6	24.5	24.3	24.6	25.4	26.1	26.7	27.1	27.4
40	178	32.2	30.8	30.4	30.7	31.6	32.6	33.4	34.0	34.4
42	187	40.1	38.4	37.7	38.0	38.9	40.1	41.3	42.1	42.7
44	196	49.4	47.3	46.4	46.6	47.6	49.0	50.4	51.6	52.4
46	205	60.4	57.7	56.6	56.7	57.7	59.3	61.1	62.6	63.7
48	214	73.2	69.9	68.4	68.4	69.4	71.2	73.3	75.3	76.8
50	222	88.0	84.1	82.2	82.0	83.0	84.9	87.4	89.8	91.7

Conversion: 1 in = 25.4 mm.

Source: *Guide for Design of Pavement Structures,* American Association of State Highway and Transportation Officials, Washington, D.C., 1993, with permission.

3.5.4 Roadbed Soil Resilient Modulus

The *resilient modulus* is a measure of the ability of a soil or granular base to resist permanent deformation under repeated loading. Many soils are stress-dependent. As the stress level increases, these soils will behave in a nonlinear fashion. Fine-grain soils tend to be stress-softening, whereas granular soils tend to be stress-hardening. Laboratory procedures for determining resilient modulus have been published by AASHTO as test method T307, or NCHRP as test method 1-38A. A typical setup for the laboratory test is shown in Fig. 3.9. The stress due to the repeated load applied through the load actuator is the deviator stress and is intended to duplicate the effect of loads passing over a section of pavement. The confining stress within the chamber is intended to duplicate the confinement of the soil within the subgrade. A typical load-response curve is shown in Fig. 3.10. As shown, the resilient modulus (M_R) is the ratio of deviator stress to strain in the elastic range.

The laboratory procedures for determining resilient modulus are complex and time-consuming. Many equations have been developed relating the resilient modulus to soil properties that are more easily determined. One such property is the California

www.EngineeringEBooksPdf.com

TABLE 3.11 Axle Load Equivalency Factors for Rigid Pavements, Tandem Axles, and p_t of 2.0

Axle load		Slab thickness D, in								
kips	kN	6	7	8	9	10	11	12	13	14
2	9	0.0001	0.0001	0.0001	0.0001	0.0001	0.0001	0.0001	0.0001	0.0001
4	18	0.0006	0.0005	0.0005	0.0005	0.0005	0.0005	0.0005	0.0005	0.0005
6	27	0.002	0.002	0.002	0.002	0.002	0.002	0.002	0.002	0.002
8	36	0.006	0.006	0.005	0.005	0.005	0.005	0.005	0.005	0.005
10	44	0.014	0.013	0.013	0.012	0.012	0.012	0.012	0.012	0.012
12	53	0.028	0.026	0.026	0.025	0.025	0.025	0.025	0.025	0.025
14	62	0.051	0.049	0.048	0.047	0.047	0.047	0.047	0.047	0.047
16	71	0.087	0.084	0.082	0.081	0.081	0.080	0.080	0.080	0.080
18	80	0.141	0.136	0.133	0.132	0.131	0.131	0.131	0.131	0.131
20	89	0.216	0.210	0.206	0.204	0.203	0.203	0.203	0.203	0.203
22	98	0.319	0.313	0.307	0.305	0.304	0.303	0.303	0.303	0.303
24	107	0.454	0.449	0.444	0.441	0.440	0.439	0.439	0.439	0.439
26	116	0.629	0.626	0.622	0.620	0.618	0.618	0.618	0.618	0.618
28	125	0.852	0.851	0.850	0.850	0.850	0.849	0.849	0.849	0.849
30	133	1.13	1.13	1.14	1.14	1.14	1.14	1.14	1.14	1.14
32	142	1.48	1.48	1.49	1.50	1.51	1.51	1.51	1.51	1.51
34	151	1.90	1.90	1.93	1.95	1.96	1.97	1.97	1.97	1.97
36	160	2.42	2.41	2.45	2.49	2.51	2.52	2.53	2.53	2.53
38	169	3.04	3.02	3.07	3.13	3.17	3.19	3.20	3.20	3.21
40	178	3.79	3.74	3.80	3.89	3.95	3.98	4.00	4.01	4.01
42	187	4.67	4.59	4.66	4.78	4.87	4.93	4.95	4.97	4.97
44	196	5.72	5.59	5.67	5.82	5.95	6.03	6.07	6.09	6.10
46	205	6.94	6.76	6.83	7.02	7.20	7.31	7.37	7.41	7.43
48	214	8.36	8.12	8.17	8.40	8.63	8.79	8.88	8.93	8.96
50	222	10.00	9.69	9.72	9.98	10.27	10.49	10.62	10.69	10.73
52	231	11.9	11.5	11.5	11.8	12.1	12.4	12.6	12.7	12.8
54	240	14.0	13.5	13.5	13.8	14.2	14.6	14.9	15.0	15.1
56	249	16.5	15.9	15.8	16.1	16.6	17.1	17.4	17.6	17.7
58	258	19.3	18.5	18.4	18.7	19.3	19.8	20.3	20.5	20.7
60	267	22.4	21.5	21.3	21.6	22.3	22.9	23.5	23.8	24.0
62	276	25.9	24.9	24.6	24.9	25.6	26.4	27.0	27.5	27.7
64	285	29.9	28.6	28.2	28.5	29.3	30.2	31.0	31.6	31.9
66	294	34.3	32.8	32.3	32.6	33.4	34.4	35.4	36.1	36.5
68	302	39.2	37.5	36.8	37.1	37.9	39.1	40.2	41.1	41.6
70	311	44.6	42.7	41.9	42.1	42.9	44.2	45.5	46.6	47.3
72	320	50.6	48.4	47.5	47.6	48.5	49.9	51.4	52.6	53.5
74	329	57.3	54.7	53.6	53.6	54.6	56.1	57.7	59.2	60.3
76	338	64.6	61.7	60.4	60.3	61.2	62.8	64.7	66.4	67.7
78	347	72.5	69.3	67.8	67.7	68.6	70.2	72.3	74.3	75.8
80	356	81.3	77.6	75.9	75.7	76.6	78.3	80.6	82.8	84.7
82	365	90.9	86.7	84.7	84.4	85.3	87.1	89.6	92.1	94.2
84	374	101.	97.	94.	94.	95.	97.	99.	102.	105.
86	383	113.	107.	105.	104.	105.	107.	110.	113.	116.
88	391	125.	119.	116.	116.	116.	118.	121.	125.	128.
90	400	138.	132.	129.	128.	129.	131.	134.	137.	141.

Conversion: 1 in = 25.4 mm.

Source: *Guide for Design of Pavement Structures,* American Association of State Highway and Transportation Officials, Washington, D.C., 1993, with permission.

www.EngineeringEBooksPdf.com

TABLE 3.12 Axle Load Equivalency Factors for Rigid Pavements, Triple Axles, and p_t of 2.0

Axle load		Slab thickness *D*, in								
kips	kN	6	7	8	9	10	11	12	13	14
2	9	0.0001	0.0001	0.0001	0.0001	0.0001	0.0001	0.0001	0.0001	0.0001
4	18	0.0003	0.0003	0.0003	0.0003	0.0003	0.0003	0.0003	0.0003	0.0003
6	27	0.0010	0.0009	0.0009	0.0009	0.0009	0.0009	0.0009	0.0009	0.0009
8	36	0.002	0.002	0.002	0.002	0.002	0.002	0.002	0.002	0.002
10	44	0.005	0.005	0.005	0.005	0.005	0.005	0.005	0.005	0.005
12	53	0.010	0.010	0.009	0.009	0.009	0.009	0.009	0.009	0.009
14	62	0.018	0.017	0.017	0.016	0.016	0.016	0.016	0.016	0.016
16	71	0.030	0.029	0.028	0.027	0.027	0.027	0.027	0.027	0.027
18	80	0.047	0.045	0.044	0.044	0.043	0.043	0.043	0.043	0.043
20	89	0.072	0.069	0.067	0.066	0.066	0.066	0.066	0.066	0.066
22	98	0.105	0.101	0.099	0.098	0.097	0.097	0.097	0.097	0.097
24	107	0.149	0.144	0.141	0.139	0.139	0.138	0.138	0.138	0.138
26	116	0.205	0.199	0.195	0.194	0.193	0.192	0.192	0.192	0.192
28	125	0.276	0.270	0.265	0.263	0.262	0.262	0.262	0.262	0.261
30	133	0.364	0.359	0.354	0.351	0.350	0.349	0.349	0.349	0.349
32	142	0.472	0.468	0.463	0.460	0.459	0.458	0.458	0.458	0.458
34	151	0.603	0.600	0.596	0.594	0.593	0.592	0.592	0.592	0.592
36	160	0.759	0.758	0.757	0.756	0.755	0.755	0.755	0.755	0.755
38	169	0.946	0.947	0.949	0.950	0.951	0.951	0.951	0.951	0.951
40	178	1.17	1.17	1.18	1.18	1.18	1.18	1.18	1.18	1.19
42	187	1.42	1.43	1.44	1.45	1.46	1.46	1.46	1.46	1.46
44	196	1.73	1.73	1.75	1.77	1.78	1.78	1.79	1.79	1.79
46	205	2.08	2.07	2.10	2.13	2.15	2.16	2.16	2.16	2.17
48	214	2.48	2.47	2.51	2.55	2.58	2.59	2.60	2.60	2.61
50	222	2.95	2.92	2.97	3.03	3.07	3.09	3.10	3.11	3.11
52	231	3.48	3.44	3.50	3.58	3.63	3.66	3.68	3.69	3.69
54	240	4.09	4.03	4.09	4.20	4.27	4.31	4.33	4.35	4.35
56	249	4.78	4.69	4.76	4.89	4.99	5.05	5.08	5.09	5.10
58	258	5.57	5.44	5.51	5.66	5.79	5.87	5.91	5.94	5.95
60	267	6.45	6.29	6.35	6.53	6.69	6.79	6.85	6.88	6.90
62	276	7.43	7.23	7.28	7.49	7.69	7.82	7.90	7.94	7.97
64	285	8.54	8.28	8.32	8.55	8.80	8.97	9.07	9.13	9.16
66	294	9.76	9.46	9.48	9.73	10.02	10.24	10.37	10.44	10.48
68	302	11.1	10.8	10.8	11.0	11.4	11.6	11.8	11.9	12.0
70	311	12.6	12.2	12.2	12.5	12.8	13.2	13.4	13.5	13.6
72	320	14.3	13.8	13.7	14.0	14.5	14.9	15.1	15.3	15.4
74	329	16.1	15.5	15.4	15.7	16.2	16.7	17.0	17.2	17.3
76	338	18.2	17.5	17.3	17.6	18.2	18.7	19.1	19.3	19.5
78	347	20.4	19.6	19.4	19.7	20.3	20.9	21.4	21.7	21.8
80	356	22.8	21.9	21.6	21.9	22.6	23.3	23.8	24.2	24.4
82	365	25.4	24.4	24.1	24.4	25.0	25.8	26.5	26.9	27.2
84	374	28.3	27.1	26.7	27.0	27.7	28.6	29.4	29.9	30.2
86	383	31.4	30.1	29.6	29.9	30.7	31.6	32.5	33.1	33.5
88	391	34.8	33.3	32.8	33.0	33.8	34.8	35.8	36.6	37.1
90	400	38.5	36.8	36.2	36.4	37.2	38.3	39.4	40.3	40.9

Conversion: 1 in = 25.4 mm.

Source: *Guide for Design of Pavement Structures,* American Association of State Highway and Transportation Officials, Washington, D.C., 1993, with permission.

www.EngineeringEBooksPdf.com

TABLE 3.13 Axle Load Equivalency Factors for Rigid Pavements, Single Axles, and p_t of 2.5

Axle load		Slab thickness *D*, in								
kips	kN	6	7	8	9	10	11	12	13	14
2	9	0.0002	0.0002	0.0002	0.0002	0.0002	0.0002	0.0002	0.0002	0.0002
4	18	0.003	0.002	0.002	0.002	0.002	0.002	0.002	0.002	0.002
6	27	0.012	0.011	0.010	0.010	0.010	0.010	0.010	0.010	0.010
8	36	0.039	0.035	0.033	0.032	0.032	0.032	0.032	0.032	0.032
10	44	0.097	0.089	0.084	0.082	0.081	0.080	0.080	0.080	0.080
12	53	0.203	0.189	0.181	0.176	0.175	0.174	0.174	0.173	0.173
14	62	0.376	0.360	0.347	0.341	0.338	0.337	0.336	0.336	0.336
16	71	0.634	0.623	0.610	0.604	0.601	0.599	0.599	0.599	0.598
18	80	1.00	1.00	1.00	1.00	1.00	1.00	1.00	1.00	1.00
20	89	1.51	1.52	1.55	1.57	1.58	1.58	1.59	1.59	1.59
22	98	2.21	2.20	2.28	2.34	2.38	2.40	2.41	2.41	2.41
24	107	3.16	3.10	3.22	3.36	3.45	3.50	3.53	3.54	3.55
26	116	4.41	4.26	4.42	4.67	4.85	4.95	5.01	5.04	5.05
28	125	6.05	5.76	5.92	6.29	6.61	6.81	6.92	6.98	7.01
30	133	8.16	7.67	7.79	8.28	8.79	9.14	9.35	9.46	9.52
32	142	10.8	10.1	10.1	10.7	11.4	12.0	12.3	12.6	12.7
34	151	14.1	13.0	12.9	13.6	14.6	15.4	16.0	16.4	16.5
36	160	18.2	16.7	16.4	17.1	18.3	19.5	20.4	21.0	21.3
38	169	23.1	21.1	20.6	21.3	22.7	24.3	25.6	26.4	27.0
40	178	29.1	26.5	25.7	26.3	27.9	29.9	31.6	32.9	33.7
42	187	36.2	32.9	31.7	32.2	34.0	36.3	38.7	40.4	41.6
44	196	44.6	40.4	38.8	39.2	41.0	43.8	46.7	49.1	50.8
46	205	54.5	49.3	47.1	47.3	49.2	52.3	55.9	59.0	61.4
48	214	66.1	59.7	56.9	56.8	58.7	62.1	66.3	70.3	73.4
50	222	79.4	71.7	68.2	67.8	69.6	73.3	78.1	83.0	87.1

Conversion: 1 in = 25.4 mm.

Source: *Guide for Design of Pavement Structures,* American Association of State Highway and Transportation Officials, Washington, D.C., 1993, with permission.

Bearing Ratio (CBR). Common equations using CBR to calculate resilient modulus values include the following:

E (lb/in^2) = 1500 CBR (Shell Oil Co.)

E (lb/in^2) = 5409 CBR$^{0.711}$ (U.S. Army Waterway Experiment Station)

E (lb/in^2) = 2550 CBR$^{0.64}$ (Transport and Road Research Laboratory, England)

(See "Pavement Deflection Analysis," FHWA Report HI-94-021, NHI, February 1994.) More detailed equations have been developed by correlating laboratory results with fundamental soil properties. R. F. Carmichael III and E. Stuart ("Predicting Resilient Modulus: A Study to Determine the Mechanical Properties of Subgrade Soils," Transportation Research Record 1043, Transportation Research Board, National Research Council, Washington, D.C., 1985) developed the following models for the U.S. Forest Service:

www.EngineeringEBooksPdf.com

TABLE 3.14 Axle Load Equivalency Factors for Rigid Pavements, Tandem Axles, and p_t of 2.5

Axle load		Slab thickness *D*, in								
kips	kN	6	7	8	9	10	11	12	13	14
2	9	0.0001	0.0001	0.0001	0.0001	0.0001	0.0001	0.0001	0.0001	0.0001
4	18	0.0006	0.0006	0.0005	0.0005	0.0005	0.0005	0.0005	0.0005	0.0005
6	27	0.002	0.002	0.002	0.002	0.002	0.002	0.002	0.002	0.002
8	36	0.007	0.006	0.006	0.005	0.005	0.005	0.005	0.005	0.005
10	44	0.015	0.014	0.013	0.013	0.012	0.012	0.012	0.012	0.012
12	53	0.031	0.028	0.026	0.026	0.025	0.025	0.025	0.025	0.025
14	62	0.057	0.052	0.049	0.048	0.047	0.047	0.047	0.047	0.047
16	71	0.097	0.089	0.084	0.082	0.081	0.081	0.080	0.080	0.080
18	80	0.155	0.143	0.136	0.133	0.132	0.131	0.131	0.131	0.131
20	89	0.234	0.220	0.211	0.206	0.204	0.203	0.203	0.203	0.203
22	98	0.340	0.325	0.313	0.308	0.305	0.304	0.303	0.303	0.303
24	107	0.475	0.462	0.450	0.444	0.441	0.440	0.439	0.439	0.439
26	116	0.644	0.637	0.627	0.622	0.620	0.619	0.618	0.618	0.618
28	125	0.855	0.854	0.852	0.850	0.850	0.850	0.849	0.849	0.849
30	133	1.11	1.12	1.13	1.14	1.14	1.14	1.14	1.14	1.14
32	142	1.43	1.44	1.47	1.49	1.50	1.51	1.51	1.51	1.51
34	151	1.82	1.82	1.87	1.92	1.95	1.96	1.97	1.97	1.97
36	160	2.29	2.27	2.35	2.43	2.48	2.51	2.52	2.52	2.53
38	169	2.85	2.80	2.91	3.03	3.12	3.16	3.18	3.20	3.20
40	178	3.52	3.42	3.55	3.74	3.87	3.94	3.98	4.00	4.01
42	187	4.32	4.16	4.30	4.55	4.74	4.86	4.91	4.95	4.96
44	196	5.26	5.01	5.16	5.48	5.75	5.92	6.01	6.06	6.09
46	205	6.36	6.01	6.14	6.53	6.90	7.14	7.28	7.36	7.40
48	214	7.64	7.16	7.27	7.73	8.21	8.55	8.75	8.86	8.92
50	222	9.11	8.50	8.55	9.07	9.68	10.14	10.42	10.58	10.66
52	231	10.8	10.0	10.0	10.6	11.3	11.9	12.3	12.5	12.7
54	240	12.8	11.8	11.7	12.3	13.2	13.9	14.5	14.8	14.9
56	249	15.0	13.8	13.6	14.2	15.2	16.2	16.8	17.3	17.5
58	258	17.5	16.0	15.7	16.3	17.5	18.6	19.5	20.1	20.4
60	267	20.3	18.5	18.1	18.7	20.0	21.4	22.5	23.2	23.6
62	276	23.5	21.4	20.8	21.4	22.8	24.4	25.7	26.7	27.3
64	285	27.0	24.6	23.8	24.4	25.8	27.7	29.3	30.5	31.3
66	294	31.0	28.1	27.1	27.6	29.2	31.3	33.2	34.7	35.7
68	302	35.4	32.1	30.9	31.3	32.9	35.2	37.5	39.3	40.5
70	311	40.3	36.5	35.0	35.3	37.0	39.5	42.1	44.3	45.9
72	320	45.7	41.4	39.6	39.8	41.5	44.2	47.2	49.8	51.7
74	329	51.7	46.7	44.6	44.7	46.4	49.3	52.7	55.7	58.0
76	338	58.3	52.6	50.2	50.1	51.8	54.9	58.6	62.1	64.8
78	347	65.5	59.1	56.3	56.1	57.7	60.9	65.0	69.0	72.3
80	356	73.4	66.2	62.9	62.5	64.2	67.5	71.9	76.4	80.2
82	365	82.0	73.9	70.2	69.6	71.2	74.7	79.4	84.4	88.8
84	374	91.4	82.4	78.1	77.3	78.9	82.4	87.4	93.0	98.1
86	383	102.	92.	87.	86.	87.	91.	96.	102.	108.
88	391	113.	102.	96.	95.	96.	100.	105.	112.	119.
90	400	125.	112.	106.	105.	106.	110.	115.	123.	130.

Conversion: 1 in = 25.4 mm.

Source: *Guide for Design of Pavement Structures,* American Association of State Highway and Transportation Officials, Washington, D.C., 1993, with permission.

www.EngineeringEBooksPdf.com

TABLE 3.15 Axle Load Equivalency Factors for Rigid Pavements, Triple Axles, and p_t of 2.5

Axle load		Slab thickness D, in								
kips	kN	6	7	8	9	10	11	12	13	14
2	9	0.0001	0.0001	0.0001	0.0001	0.0001	0.0001	0.0001	0.0001	0.0001
4	18	0.0003	0.0003	0.0003	0.0003	0.0003	0.0003	0.0003	0.0003	0.0003
6	27	0.001	0.001	0.001	0.001	0.001	0.001	0.001	0.001	0.001
8	36	0.003	0.002	0.002	0.002	0.002	0.002	0.002	0.002	0.002
10	44	0.006	0.005	0.005	0.005	0.005	0.005	0.005	0.005	0.005
12	53	0.011	0.010	0.010	0.009	0.009	0.009	0.009	0.009	0.009
14	62	0.020	0.018	0.017	0.017	0.016	0.016	0.016	0.016	0.016
16	71	0.033	0.030	0.029	0.028	0.027	0.027	0.027	0.027	0.027
18	80	0.053	0.048	0.045	0.044	0.044	0.043	0.043	0.043	0.043
20	89	0.080	0.073	0.069	0.067	0.066	0.066	0.066	0.066	0.066
22	98	0.116	0.107	0.101	0.099	0.098	0.097	0.097	0.097	0.097
24	107	0.163	0.151	0.144	0.141	0.139	0.139	0.138	0.138	0.138
26	116	0.222	0.209	0.200	0.195	0.194	0.193	0.192	0.192	0.192
28	125	0.295	0.281	0.271	0.265	0.263	0.262	0.262	0.262	0.262
30	133	0.384	0.371	0.359	0.354	0.351	0.350	0.349	0.349	0.349
32	142	0.490	0.480	0.468	0.463	0.460	0.459	0.458	0.458	0.458
34	151	0.616	0.609	0.601	0.596	0.594	0.593	0.592	0.592	0.592
36	160	0.765	0.762	0.759	0.757	0.756	0.755	0.755	0.755	0.755
38	169	0.939	0.941	0.946	0.948	0.950	0.951	0.951	0.951	0.951
40	178	1.14	1.15	1.16	1.17	1.18	1.18	1.18	1.18	1.18
42	187	1.38	1.38	1.41	1.44	1.45	1.46	1.46	1.46	1.46
44	196	1.65	1.65	1.70	1.74	1.77	1.78	1.78	1.78	1.79
46	205	1.97	1.96	2.03	2.09	2.13	2.15	2.16	2.16	2.16
48	214	2.34	2.31	2.40	2.49	2.55	2.58	2.59	2.60	2.60
50	222	2.76	2.71	2.81	2.94	3.02	3.07	3.09	3.10	3.11
52	231	3.24	3.15	3.27	3.44	3.56	3.62	3.66	3.68	3.68
54	240	3.79	3.66	3.79	4.00	4.16	4.26	4.30	4.33	4.34
56	249	4.41	4.23	4.37	4.63	4.84	4.97	5.03	5.07	5.09
58	258	5.12	4.87	5.00	5.32	5.59	5.79	5.85	5.90	5.93
60	267	5.91	5.59	5.71	6.08	6.42	6.64	6.77	6.84	6.87
62	276	6.80	6.39	6.50	6.91	7.33	7.62	7.79	7.88	7.93
64	285	7.79	7.29	7.37	7.82	8.33	8.70	8.92	9.04	9.11
66	294	8.90	8.28	8.33	8.83	9.42	9.88	10.17	10.33	10.42
68	302	10.1	9.4	9.4	9.9	10.6	11.2	11.5	11.7	11.9
70	311	11.5	10.6	10.6	11.1	11.9	12.6	13.0	13.3	13.5
72	320	13.0	12.0	11.8	12.4	13.3	14.1	14.7	15.0	15.2
74	329	14.6	13.5	13.2	13.8	14.8	15.8	16.5	16.9	17.1
76	338	16.5	15.1	14.8	15.4	16.5	17.6	18.4	18.9	19.2
78	347	18.5	16.9	16.5	17.1	18.2	19.5	20.5	21.1	21.5
80	356	20.6	18.8	18.3	18.9	20.2	21.6	22.7	23.5	24.0
82	365	23.0	21.0	20.3	20.9	22.2	23.8	25.2	26.1	26.7
84	374	25.6	23.3	22.5	23.1	24.5	26.2	27.8	28.9	29.6
86	383	28.4	25.8	24.9	25.4	26.9	28.8	30.5	31.9	32.8
88	391	31.5	28.6	27.5	27.9	29.4	31.5	33.5	35.1	36.1
90	400	34.8	31.5	30.3	30.7	32.2	34.4	36.7	38.5	39.8

Conversion: 1 in = 25.4 mm.

Source: *Guide for Design of Pavement Structures,* American Association of State Highway and Transportation Officials, Washington, D.C., 1993, with permission.

www.EngineeringEBooksPdf.com

TABLE 3.16 Axle Load Equivalency Factors for Rigid Pavements, Single Axles, and p_t of 3.0

Axle load		Slab thickness D, in								
kips	kN	6	7	8	9	10	11	12	13	14
2	9	0.0003	0.0002	0.0002	0.0002	0.0002	0.0002	0.0002	0.0002	0.0002
4	18	0.003	0.003	0.002	0.002	0.002	0.002	0.002	0.002	0.002
6	27	0.014	0.012	0.011	0.010	0.010	0.010	0.010	0.010	0.010
8	36	0.045	0.038	0.034	0.033	0.032	0.032	0.032	0.032	0.032
10	44	0.111	0.095	0.087	0.083	0.081	0.081	0.080	0.080	0.080
12	53	0.228	0.202	0.186	0.179	0.176	0.174	0.174	0.174	0.173
14	62	0.408	0.378	0.355	0.344	0.340	0.337	0.337	0.336	0.336
16	71	0.660	0.640	0.619	0.608	0.603	0.600	0.599	0.599	0.599
18	80	1.00	1.00	1.00	1.00	1.00	1.00	1.00	1.00	1.00
20	89	1.46	1.47	1.52	1.55	1.57	1.58	1.58	1.59	1.59
22	98	2.07	2.06	2.18	2.29	2.35	2.38	2.40	2.41	2.41
24	107	2.90	2.81	3.00	3.23	3.38	3.47	3.51	3.53	3.54
26	116	4.00	3.77	4.01	4.40	4.70	4.87	4.96	5.01	5.04
28	125	5.43	4.99	5.23	5.80	6.31	6.65	6.83	6.93	6.98
30	133	7.27	6.53	6.72	7.46	8.25	8.83	9.17	9.36	9.46
32	142	9.59	8.47	8.53	9.42	10.54	11.44	12.03	12.37	12.56
34	151	12.5	10.9	10.7	11.7	13.2	14.5	15.5	16.0	16.4
36	160	16.0	13.8	13.4	14.4	16.2	18.1	19.5	20.4	21.0
38	169	20.4	17.4	16.7	17.7	19.8	22.2	24.2	25.6	26.4
40	178	25.6	21.8	20.6	21.5	23.8	26.8	29.5	31.5	32.9
42	187	31.8	26.9	25.3	26.0	28.5	32.0	35.5	38.4	40.3
44	196	39.2	33.1	30.8	31.3	33.9	37.9	42.3	46.1	48.8
46	205	47.8	40.3	37.2	37.5	40.1	44.5	49.8	54.7	58.5
48	214	57.9	48.6	44.8	44.7	47.3	52.1	58.2	64.3	69.4
50	222	69.6	58.4	53.6	53.1	55.6	60.6	67.6	75.0	81.4

Conversion: 1 in = 25.4 mm.

Source: *Guide for Design of Pavement Structures,* American Association of State Highway and Transportation Officials, Washington, D.C., 1993, with permission.

Cohesive soils:

$$M_R = 37.431 - 0.4566(\text{PI}) - 0.6179(\%\text{W}) - 0.1424(\text{S200}) + 0.1791(\text{CS}) - 0.3248(\text{DS}) + 36.422(\text{CH}) + 17.097(\text{MH}) \qquad (3.5)$$

where M_R = resilient modulus, kips/in^2

PI = plasticity index

%W = percentage water

S200 = percentage passing the no. 200 sieve

CS = confining stress, lb/in^2

DS = deviator stress, lb/in^2

$$\text{CH} = \begin{cases} 1 \text{ for CH soil (Unified Soil Classification, Art. 8.3.2)} \\ 0 \text{ otherwise} \end{cases}$$

$$\text{MH} = \begin{cases} 1 \text{ for MH soil (Unified Soil Classification)} \\ 0 \text{ otherwise} \end{cases}$$

www.EngineeringEBooksPdf.com

TABLE 3.17 Axle Load Equivalency Factors for Rigid Pavements, Tandem Axles, and p_t of 3.0

Axle load		Slab thickness *D,* in								
kips	kN	6	7	8	9	10	11	12	13	14
2	9	0.0001	0.0001	0.0001	0.0001	0.0001	0.0001	0.0001	0.0001	0.0001
4	18	0.0007	0.0006	0.0005	0.0005	0.0005	0.0005	0.0005	0.0005	0.0005
6	27	0.003	0.002	0.002	0.002	0.002	0.002	0.002	0.002	0.002
8	36	0.008	0.006	0.006	0.006	0.005	0.005	0.005	0.005	0.005
10	44	0.018	0.015	0.013	0.013	0.013	0.012	0.012	0.012	0.012
12	53	0.036	0.030	0.027	0.026	0.026	0.025	0.025	0.025	0.025
14	62	0.066	0.056	0.050	0.048	0.047	0.047	0.047	0.047	0.047
16	71	0.111	0.095	0.087	0.083	0.081	0.081	0.081	0.080	0.080
18	80	0.174	0.153	0.140	0.135	0.132	0.131	0.131	0.131	0.131
20	89	0.260	0.234	0.217	0.209	0.205	0.204	0.203	0.203	0.203
22	98	0.368	0.341	0.321	0.311	0.307	0.305	0.304	0.303	0.303
24	107	0.502	0.479	0.458	0.447	0.443	0.440	0.440	0.439	0.439
26	116	0.664	0.651	0.634	0.625	0.621	0.619	0.618	0.618	0.618
28	125	0.859	0.857	0.853	0.851	0.850	0.850	0.850	0.849	0.849
30	133	1.09	1.10	1.12	1.13	1.14	1.14	1.14	1.14	1.14
32	142	1.38	1.38	1.44	1.47	1.49	1.50	1.51	1.51	1.51
34	151	1.72	1.71	1.80	1.88	1.93	1.95	1.96	1.97	1.97
36	160	2.13	2.10	2.23	2.36	2.45	2.49	2.51	2.52	2.52
38	169	2.62	2.54	2.71	2.92	3.06	3.13	3.17	3.19	3.20
40	178	3.21	3.05	3.26	3.55	3.76	3.89	3.95	3.98	4.00
42	187	3.90	3.65	3.87	4.26	4.58	4.77	4.87	4.92	4.95
44	196	4.72	4.35	4.57	5.06	5.50	5.78	5.94	6.02	6.06
46	205	5.68	5.16	5.36	5.95	6.54	6.94	7.17	7.29	7.36
48	214	6.80	6.10	6.25	6.93	7.69	8.24	8.57	8.76	8.86
50	222	8.09	7.17	7.26	8.03	8.96	9.70	10.17	10.43	10.58
52	231	9.57	8.41	8.40	9.24	10.36	11.32	11.96	12.33	12.54
54	240	1.13	9.8	9.7	10.6	11.9	13.1	14.0	14.5	14.8
56	249	13.2	11.4	11.2	12.1	13.6	15.1	16.2	16.9	17.3
58	258	15.4	13.2	12.8	13.7	15.4	17.2	18.6	19.5	20.1
60	267	17.9	15.3	14.7	15.6	17.4	19.5	21.3	22.5	23.2
62	276	20.6	17.6	16.8	17.6	19.6	22.0	24.1	25.7	26.6
64	285	23.7	20.2	19.1	19.9	22.0	24.7	27.3	29.2	30.4
66	294	27.2	23.1	21.7	22.4	24.6	27.6	30.6	33.0	34.6
68	302	31.1	26.3	24.6	25.2	27.4	30.8	34.3	37.1	39.2
70	311	35.4	29.8	27.8	28.2	30.6	34.2	38.2	41.6	44.1
72	320	40.1	33.8	31.3	31.6	34.0	37.9	42.3	46.4	49.4
74	329	45.3	38.1	35.2	35.4	37.7	41.8	46.8	51.5	55.2
76	338	51.1	42.9	39.5	39.5	41.8	46.1	51.5	56.9	61.3
78	347	57.4	48.2	44.3	44.0	46.3	50.7	56.6	62.7	67.9
80	356	64.3	53.9	49.4	48.9	51.1	55.8	62.1	68.9	74.9
82	365	71.8	60.2	55.1	54.3	56.5	61.2	67.9	75.5	82.4
84	374	80.0	67.0	61.2	60.2	62.2	67.0	74.2	82.4	90.3
86	383	89.0	74.5	67.9	66.5	68.5	73.4	80.8	89.8	98.7
88	391	98.7	82.5	75.2	73.5	75.3	80.2	88.0	97.7	107.5
90	400	109.	91.	83.	81.	83.	88.	96.	106.	117

Conversion: 1 in = 25.4 mm.

Source: *Guide for Design of Pavement Structures,* American Association of State Highway and Transportation Officials, Washington, D.C., 1993, with permission.

www.EngineeringEBooksPdf.com

TABLE 3.18 Axle Load Equivalency Factors for Rigid Pavements, Triple Axles, and p_t of 3.0

Axle load		Slab thickness *D*, in								
kips	kN	6	7	8	9	10	11	12	13	14
2	9	0.0001	0.0001	0.0001	0.0001	0.0001	0.0001	0.0001	0.0001	0.0001
4	18	0.0004	0.0003	0.0003	0.0003	0.0003	0.0003	0.0003	0.0003	0.0003
6	27	0.001	0.001	0.001	0.001	0.001	0.001	0.001	0.001	0.001
8	36	0.003	0.003	0.002	0.002	0.002	0.002	0.002	0.002	0.002
10	44	0.007	0.006	0.005	0.005	0.005	0.005	0.005	0.005	0.005
12	53	0.013	0.011	0.010	0.009	0.009	0.009	0.009	0.009	0.009
14	62	0.023	0.020	0.018	0.017	0.017	0.016	0.016	0.016	0.016
16	71	0.039	0.033	0.030	0.028	0.028	0.027	0.027	0.027	0.027
18	80	0.061	0.052	0.047	0.045	0.044	0.044	0.043	0.043	0.043
20	89	0.091	0.078	0.071	0.068	0.067	0.066	0.066	0.066	0.066
22	98	0.132	0.114	0.104	0.100	0.098	0.097	0.097	0.097	0.097
24	107	0.183	0.161	0.148	0.143	0.140	0.139	0.139	0.138	0.138
26	116	0.246	0.221	0.205	0.198	0.195	0.193	0.193	0.192	0.192
28	125	0.322	0.296	0.277	0.268	0.265	0.263	0.262	0.262	0.262
30	133	0.411	0.387	0.367	0.357	0.353	0.351	0.350	0.349	0.349
32	142	0.515	0.495	0.476	0.466	0.462	0.460	0.459	0.458	0.458
34	151	0.634	0.622	0.607	0.599	0.595	0.594	0.593	0.592	0.592
36	160	0.772	0.768	0.762	0.758	0.756	0.756	0.755	0.755	0.755
38	169	0.930	0.934	0.942	0.947	0.949	0.950	0.951	0.951	0.951
40	178	1.11	1.12	1.15	1.17	1.18	1.18	1.18	1.18	1.18
42	187	1.32	1.33	1.38	1.42	1.44	1.45	1.46	1.46	1.46
44	196	1.56	1.56	1.64	1.71	1.75	1.77	1.78	1.78	1.78
46	205	1.84	1.83	1.94	2.04	2.10	2.14	2.15	2.16	2.16
48	214	2.16	2.12	2.26	2.41	2.51	2.56	2.58	2.59	2.60
50	222	2.53	2.45	2.61	2.82	2.96	3.03	3.07	3.09	3.10
52	231	2.95	2.82	3.01	3.27	3.47	3.58	3.63	3.66	3.68
54	240	3.43	3.23	3.43	3.77	4.03	4.18	4.27	4.31	4.33
56	249	3.98	3.70	3.90	4.31	4.65	4.86	4.98	5.04	5.07
58	258	4.59	4.22	4.42	4.90	5.34	5.62	5.78	5.86	5.90
60	267	5.28	4.80	4.99	5.54	6.08	6.45	6.66	6.78	6.84
62	276	6.06	5.45	5.61	6.23	6.89	7.36	7.64	7.80	7.88
64	285	6.92	6.18	6.29	6.98	7.76	8.36	8.72	8.93	9.04
66	294	7.89	6.98	7.05	7.78	8.70	9.44	9.91	10.18	10.33
68	302	8.96	7.88	7.87	8.66	9.71	10.61	11.20	11.55	11.75
70	311	10.2	8.9	8.8	9.6	10.8	11.9	12.6	13.1	13.3
72	320	11.5	10.0	9.8	10.6	12.0	13.2	14.1	14.7	15.0
74	329	12.9	11.2	10.9	11.7	13.2	14.7	15.8	16.5	16.9
76	338	14.5	12.5	12.1	12.9	14.5	16.2	17.5	18.4	18.9
78	347	16.2	13.9	13.4	14.2	15.9	17.8	19.4	20.5	21.1
80	356	18.2	15.5	14.8	15.6	17.4	19.6	21.4	22.7	23.5
82	365	20.2	17.2	16.4	17.2	19.1	21.4	23.5	25.1	26.1
84	374	22.5	19.1	18.1	18.8	20.8	23.4	25.8	27.6	28.8
86	383	25.0	21.2	19.9	20.6	22.6	25.5	28.2	30.4	31.8
88	391	27.6	23.4	21.9	22.5	24.6	27.7	30.7	33.2	35.0
90	400	30.5	25.8	24.1	24.6	26.8	30.0	33.4	36.3	38.3

Conversion: 1 in = 25.4 mm.

Source: *Guide for Design of Pavement Structures,* American Association of State Highway and Transportation Officials, Washington, D.C., 1993, with permission.

www.EngineeringEBooksPdf.com

TABLE 3.19 Worksheet for Calculating 18-kip (80-kN) Equivalent Single-Axle Load (ESAL) Applications

Location _____ Analysis period = _____ years

Assumed SN or D = _____ in

Vehicle types	Current traffic (A)	Growth factors (B)	Design traffic (C)	ESAL factor (D)	Design ESAL (E)
Passenger cars Buses					
Panel and pickup trucks Other 2-axle/4-tire trucks 2-axle/6-tire trucks 3 or more axle trucks All single-unit trucks					
3-axle tractor semitrailers 4-axle tractor semitrailers 5+ axle tractor semitrailers All tractor semitrailers					
5-axle double trailers 6+ axle double trailers All double trailer combos					
3-axle truck-trailers 4-axle truck-trailers 5+ axle truck-trailers All truck-trailer combos					
All vehicles				Design ESAL	

Source: *Guide for Design of Pavement Structures,* American Association of State Highway and Transportation Officials, Washington, D.C., 1993, with permission.

Granular soils:

$$\log M_R = 0.523 - 0.0225(\%W) + 0.544(\log T) + 0.173(SM) + 0.197(GR) \tag{3.6}$$

where M_R = resilient modulus, kips/in^2

$\%W$ = percentage water

T = bulk stress = DS + 3CS

$$SM = \begin{cases} 1 \text{ for SM soil (Unified Soil Classification, Art. 8.3.2)} \\ 0 \text{ otherwise} \end{cases}$$

$$GR = \begin{cases} 1 \text{ for GR soil (Unified Soil Classification)} \\ 0 \text{ otherwise} \end{cases}$$

www.EngineeringEBooksPdf.com

TABLE 3.20 Worksheet for Calculating 18-kip (80-kN) Equivalent Single-Axle Load (ESAL) Applications

Location _____ Example 1

Analysis period = _____20_____ years

Assumed SN or D = _____9_____ in

Vehicle types	Current traffic (A)	Growth factors (B)	Design traffic (C)	ESAL factor (D)	Design ESAL (E)
		2%			
Passenger cars	5,925	24.30	52,551,787	0.0008	42,041
Buses	35	24.30	310,433	0.6806	211,280
Panel and pickup trucks	1,135	24.30	10,066,882	0.0122	122,816
Other 2-axle/4-tire trucks	3	24.30	26,609	0.0052	138
2-axle/6-tire trucks	372	24.30	3,299,454	0.1890	623,597
3 or more axle trucks	34	24.30	301,563	0.1303	39,294
All single-unit trucks					
3-axle tractor semitrailers	19	24.30	168,521	0.8646	145,703
4-axle tractor semitrailers	49	24.30	434,606	0.6560	285,101
5+ axle tractor semitrailers	1,880	24.30	16,674,660	2.3719	39,550,626
All tractor semitrailers					
5-axle double trailers	103	24.30	913,559	2.3187	2,118,268
6+ axle double trailers	0	24.30			
All double trailer combos					
3-axle truck-trailers	208	24.30	1,844,856	0.0152	28,042
4-axle truck-trailers	305	24.30	2,705,198	0.0152	41,119
5+ axle truck-trailers	125	24.30	1,108,688	0.5317	589,489
All truck-trailer combos					
All vehicles	10,193		90,406,816	Design ESAL	43,772,314

Source: *Guide for Design of Pavement Structures,* American Association of State Highway and Transportation Officials, Washington, D.C., 1993, with permission.

TABLE 3.21 Equivalency Factors for Determining ESAL

	Rigid pavement		Flexible pavement	
Function classification	B	C	B	C
Rural interstate	2.27	0.914	1.60	0.735
All other rural	2.16	1.02	1.44	0.777
Urban interstate, freeway, and expressway	2.50	1.48	1.74	1.13
All other urban	1.61	0.673	1.11	0.534

Notes: B = tractor-trucks with semitrailers and trucks with trailers. C = single-unit trucks (2 axles, 6 tires or more).

Source: Ohio Department of Transportation, *Location and Design Manual,* Vol. 1, *Roadway Design,* December 1990, revised October 1992, with permission.

www.EngineeringEBooksPdf.com

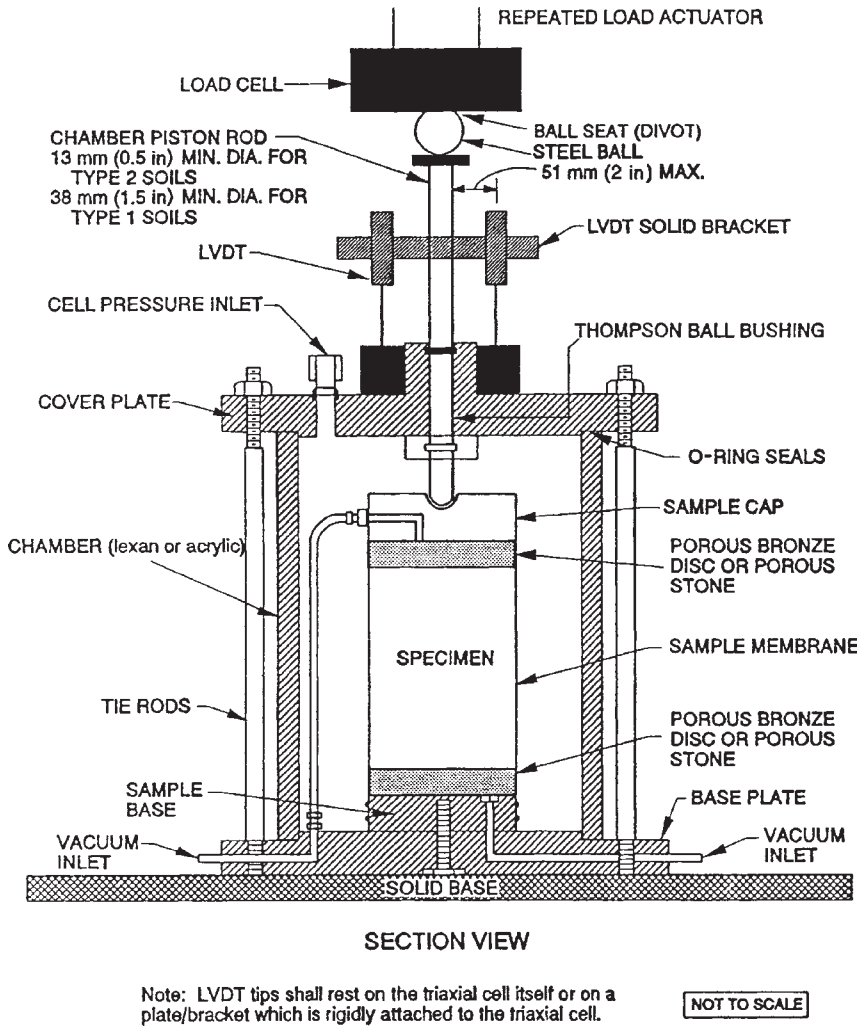

FIGURE 3.9 Triaxial test chamber for determining resilient modulus of soil specimen. (*From NRC Operational Guide No. SHRP-LTPP-OG-004, "SHRP-LTPP Interim Guide for Laboratory Material Handling and Testing," with permission*)

3.6 RIGID PAVEMENT DESIGN PROCEDURE

The steps involved in designing a rigid pavement using the AASHTO design equations are as follows:

1. Determine the effective modulus of subgrade reaction.
2. Select the material properties for the concrete pavement.

www.EngineeringEBooksPdf.com

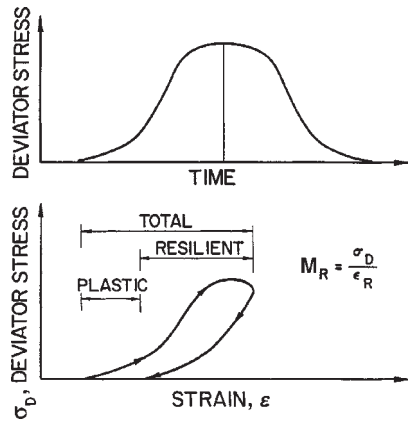

FIGURE 3.10 Load-response curve used to determine resilient modulus. (*From M. Thompson, "Factors Affecting the Resilient Modulus of Soils and Granular Materials,"* Proceedings of Workshop on Resilient Modulus Testing, *Oregon State University, Corvallis, 1989, with permission*)

3. Determine the drainage coefficient for the pavement.
4. Select the design serviceability loss.
5. Estimate the total number of 18-kip (80-kN) equivalent single-axle loads for the design period.
6. Select a level of reliability and the overall standard deviation.
7. Determine slab thickness and steel reinforcement.

Determine Effective Subgrade Modulus. The first step in designing the thickness of a rigid pavement is the determination of the effective modulus of subgrade reaction. The effective modulus (or composite modulus) is the modulus of subgrade reaction after correction for use of subbase, seasonal variation in subgrade and subbase strength, rigid foundation within 10 ft (3 m) of the surface, and loss of support. Figure 3.11 is used to determine the composite modulus of subgrade reaction when a subbase will be used under the concrete pavement. If the pavement will be placed directly on the subgrade, the AASHTO *Pavement Design Guide* recommends a composite modulus of subgrade reaction of:

$$k = \frac{M_R}{19.4} \tag{3.7}$$

where k is in lb/in^3 and M_R is in lb/in^2.

When a stiff layer (bedrock, etc.) is located within 10 ft (3 m) of the surface, the stiff layer will provide additional support for the pavement. Figure 3.12 is used to correct the composite modulus of subgrade reaction for this additional support.

www.EngineeringEBooksPdf.com

Example:

D_{SB} = 6 in (150 mm)

E_{SB} = 20,000 lb/in^2 (138 MPa)

M_R = 7,000 lb/in^2 (48 MPa)

Solution: k_∞ = 400 lb/in^3 (0.109 N/mm^3)

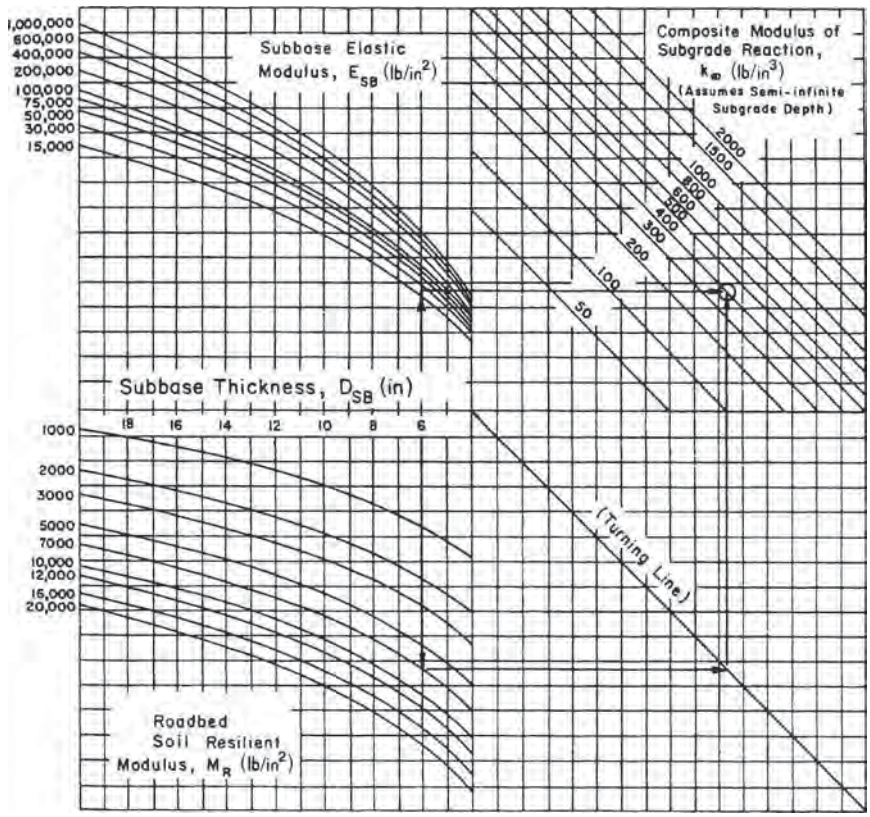

FIGURE 3.11 Chart for estimating composite modulus of subgrade reaction k_∞, assuming a semi-infinite subgrade depth; defined as over 10 ft (3 m) below subgrade surface. (*From* Guide for Design of Pavement Structures, *American Association of State Highway and Transportation Officials, Washington, D.C., 1993, with permission*)

In regions where large moisture variations, freeze and thaw, etc., will affect the strength of the subgrade soils and subgrade, AASHTO provides a procedure to modify the composite modulus of subgrade reaction. Table 3.22 provides a worksheet, and Table 3.23 shows an example. The seasonal variation in strength is determined using laboratory procedures or nondestructive testing (NDT). The seasonal strength of the subbase and subgrade is entered in columns 2 and 3 of Table 3.22. The composite modulus of subgrade reaction is determined using Fig. 3.11 and entered in column 4. If a rigid foundation is present within 10 ft (3 m) of the surface, the *k* value is corrected

www.EngineeringEBooksPdf.com

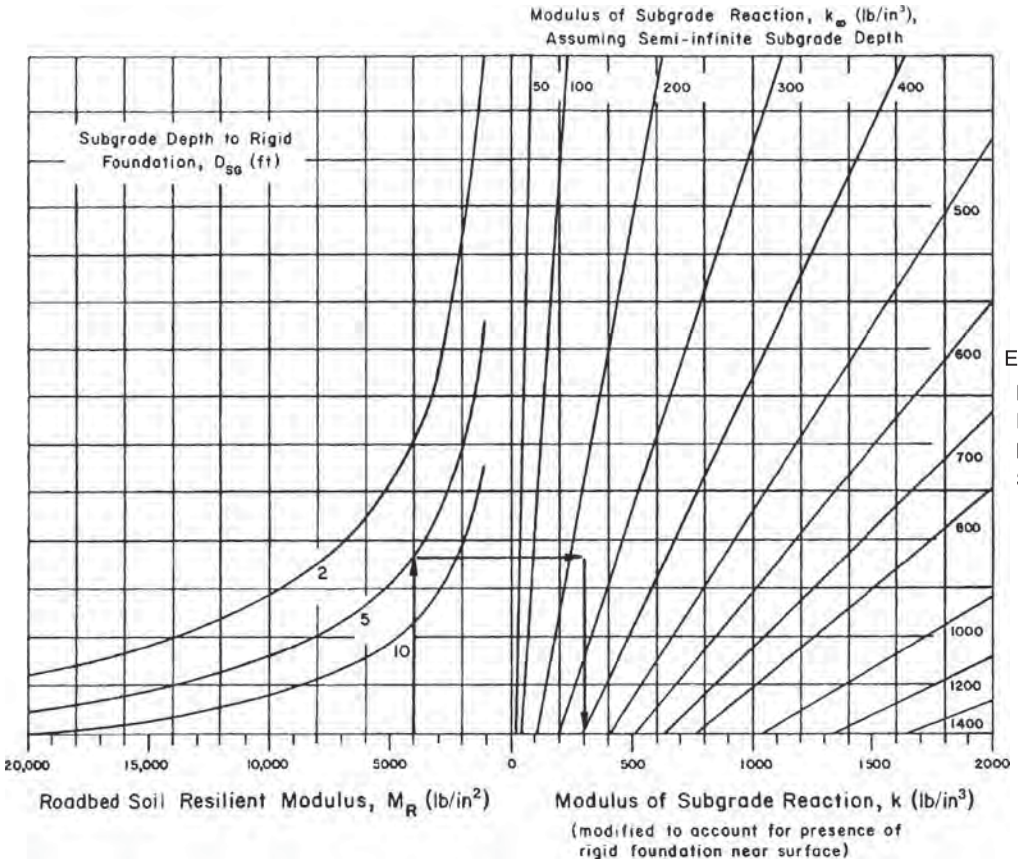

Example:

M_R = 4000 lb/in^2 (27.6 MPa)
D_{SG} = 5 ft (1.5 m)
k_∞ = 230 lb/in^3 (0.062 N/mm^3)
Solution: k = 300 lb/in^3 (0.081 N/mm^3)

FIGURE 3.12 Chart for modifying modulus of subgrade reaction to consider effect of rigid foundation near the surface. Conversions: 1 lb/in^2 = 6.895 × 10^{-3} MPa, 1 lb/in^3 = 271.4 × 10^{-4} N/mm^2, 1 ft = 0.305 m. (*From* Guide for Design of Pavement Structures, *American Association of State Highway and Transportation Officials, Washington, D.C., 1993, with permission*)

www.EngineeringEBooksPdf.com

TABLE 3.22 Table for Estimating Effective Modulus of Subgrade Reaction

Trial subbase: Type _____ Depth to rigid foundation, ft _____

Thickness, in _____ Projected slab thickness, in _____

Loss of support, LS _____

Month (1)	Roadbed modulus M_R, lb/in^2 (2)	Subbase modulus, E_{SB}, lb/in^2 (3)	Composite k value, lb/in^3 (Fig. 3.11) (4)	k value, lb/in^3 on rigid foundation (Fig. 3.12) (5)	Relative damage u_r (Fig. 3.13) (6)
January					
February					
March					
April					
May					
June					
July					
August					
September					
October					
November					
December					

Summation: $\sum u_r =$

Average: $\bar{u}_r = \dfrac{\sum u_r}{n} =$ _____

Effective modulus of subgrade reaction k (lb/in^3) = _____

Corrected for loss of support (Fig. 3.14): k (lb/in^3) = _____

Conversions: 1 lb/in^2 = 6.895×10^{-3} MPa, 1 lb/in^3 = 271.4×10^{-4} N/mm^2, 1 in = 25.4 mm, 1 ft = 0.305 m.

Source: *Guide for Design of Pavement Structures,* American Association of State Highway and Transportation Officials, Washington, D.C., 1993, with permission.

www.EngineeringEBooksPdf.com

TABLE 3.23 Example Application of Method for Estimating Effective Modulus of Subgrade Reaction

Trial subbase: Type Granular — Depth to rigid foundations, ft 5

Thickness, in 6 — Projected slab thickness, in 9

Loss of support, LS 1.0

Month (1)	Roadbed modulus M_R, lb/in^2 (2)	Subbase modulus, E_{SB}, lb/in^2 (3)	Composite k value, lb/in^3 (Fig. 3.11) (4)	k value, lb/in^3 on rigid foundation (Fig. 3.12) (5)	Relative damage u_r (Fig. 3.13) (6)
January	20,000	50,000	1,100	1,350	0.35
February	20,000	50,000	1,100	1,350	0.35
March	2,500	15,000	160	230	0.86
April	4,000	15,000	230	300	0.78
May	4,000	15,000	230	300	0.78
June	7,000	20,000	410	540	0.60
July	7,000	20,000	410	540	0.60
August	7,000	20,000	410	540	0.60
September	7,000	20,000	410	540	0.60
October	7,000	20,000	410	540	0.60
November	4,000	15,000	230	300	0.78
December	20,000	50,000	1,100	1,350	0.35

Summation: $\sum u_r = 7.25$

Average: $\bar{u}_r = \dfrac{\sum u_r}{n} =$ 0.60

Effective modulus of subgrade reaction k (lb/in^3) = 540

Corrected for loss of support (Fig. 3.14): k (lb/in^3) = 170

Conversions: See Table 3.22.

Source: *Guide for Design of Pavement Structures,* American Association of State Highway and Transportation Officials, Washington, D.C., 1993, with permission.

www.EngineeringEBooksPdf.com

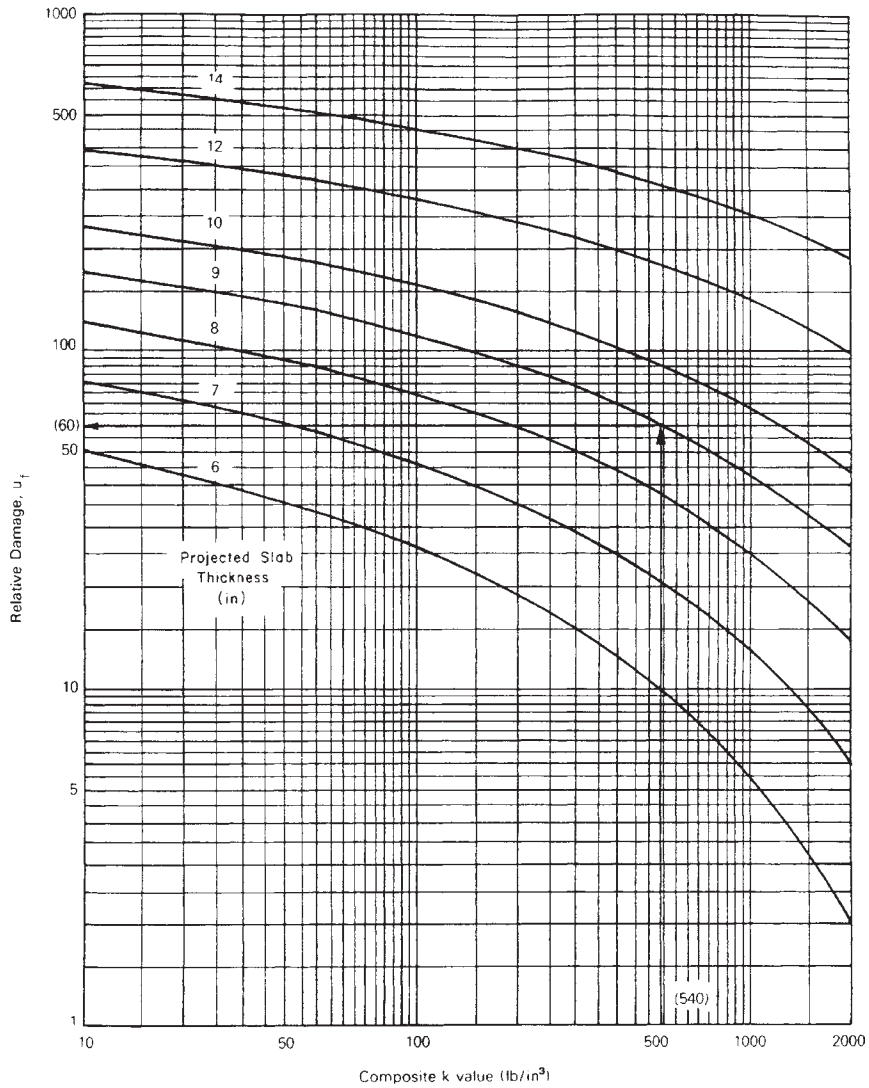

FIGURE 3.13 Chart for estimating relative damage to rigid pavements based on slab thickness and underlying support. Conversions: 1 lb/in^3 = 271.4 × 10^{-4} N/mm^2, 1 in = 25.4 m. (*From* Guide for Design of Pavement Structures, *American Association of State Highway and Transportation Officials, Washington, D.C., 1993, with permission*)

using Fig. 3.12 and entered in column 5. The corrected k value is then used in Fig. 3.13 to determine the seasonal or relative damage factor, which is entered in column 6. The sum of relative damage is divided by the total number of periods to determine the average relative damage factor. This value is entered in Fig. 3.13 to determine the average composite modulus of subgrade reaction for the year. Many concrete pavements fail as a result of pumping or loss of support under the slab. Figure 3.14 is provided to correct the effective modulus of subgrade reaction for loss of support. This figure lowers the k so that the

www.EngineeringEBooksPdf.com

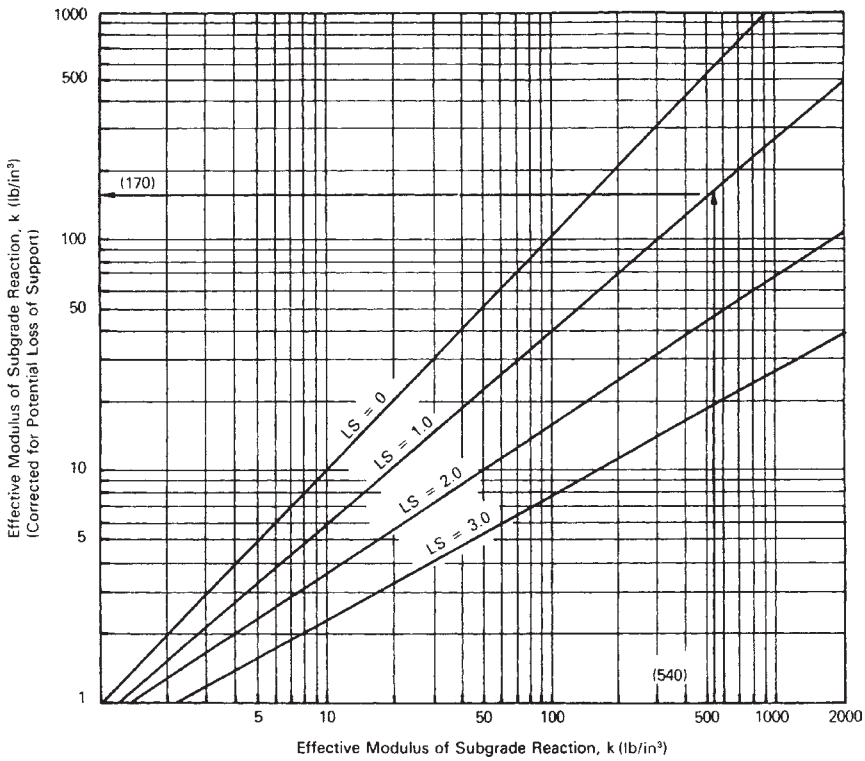

FIGURE 3.14 Chart for correction of effective modulus of subgrade reaction for potential loss of subbase support. Conversion: 1 lb/in^3 = 271.4 × 10^{-4} N/mm^2. (*From* Guide for Design of Pavement Structures, *American Association of State Highway and Transportation Officials, Washington, D.C., 1993, with permission*)

stress in the slab will be the same as for a slab with a void. Although the AASHTO procedure includes design for loss of support, it is recommended that a pavement base be designed to prevent or reduce loss of support, especially under pavements supporting a large number of heavy loads in wet areas. The cost of providing a base to resist loss of support may be less than the cost of restoring support in the future.

Select Pavement Material Properties. The next step in the design of a rigid pavement is to select material properties. The reliability level and overall standard deviation consider the variation in material properties. Therefore, average material property values must be used in design. The concrete material values needed for design are the average concrete modulus of elasticity and the average concrete modulus of rupture. These values are not known until after construction of the pavement unless the plans for the pavement contain a performance specification. Material properties from past pavement construction may be used for design purposes provided a similar mix will be used. American Society for Testing and Materials' "Test Method for Static Modulus of Elasticity and Poisson's Ratio of Concrete in Compression," ASTM C469, details the laboratory test method for determining the concrete modulus of elasticity. ASTM C78,

www.EngineeringEBooksPdf.com

TABLE 3.24 Recommended Values of Drainage Coefficient C_d for Rigid Pavement Design

	Percent of time pavement structure is exposed to moisture levels approaching saturation			
Quality of drainage	Less than 1%	1–5%	5–25%	Greater than 25%
Excellent	1.25–1.20	1.20–1.15	1.15–1.10	1.10
Good	1.20–1.15	1.15–1.10	1.10–1.00	1.00
Fair	1.15–1.10	1.10–1.00	1.00–0.90	0.90
Poor	1.10–1.00	1.00–0.90	0.90–0.80	0.80
Very poor	1.00–0.90	0.90–0.80	0.80–0.70	0.70

Source: *Guide for Design of Pavement Structures,* American Association of State Highway and Transportation Officials, Washington, D.C., 1993, with permission.

"Test Method for Flexural Strength of Concrete (Using Simple Beam with Third-Point Loading)," details the laboratory test method for determining the concrete flexural strength (modulus of rupture).

Determine Drainage Coefficient. The drainage coefficient is used to modify the design thickness for drainage conditions. Moisture affects the pavement performance by decreasing the strength of the subgrade and subbase material and affects the warping and curling behavior of the concrete slabs. The intent of the drainage coefficient is to allow performance prediction for pavements without a proper drainage system. Increasing the pavement thickness should not be used in lieu of a properly designed drainage system. Recommended values for the drainage coefficient are given in Table 3.24. The Federal Highway Administration's "Highway Subdrainage Design Manual," Report No. FHWA-TS-80-224, provides a procedure that may be used to determine drainage times for base material. (See Arts. 5.4.5 and 5.4.6.)

Select Design Serviceability Loss. The design serviceability loss is the amount of serviceability loss the agency will tolerate before rehabilitation. To select a design serviceability loss, the designer needs to know the initial serviceability and the terminal serviceability of the pavement. The initial serviceability is the serviceability immediately after construction. Since this value is unknown at the time of construction, the designer will usually use the average initial serviceability of previously constructed pavements. The terminal serviceability is the serviceability of a pavement immediately before rehabilitation. The terminal serviceability is a function of traffic volume and speed. A low-volume road with low speeds may be allowed to deteriorate to a lower serviceability than a high-volume freeway, since the associated user costs will be lower. The terminal serviceability used by an agency is a policy decision. Common terminal serviceabilities are 2.5 for high-volume roads and 2.0 for low-volume roads.

Estimate ESALs. The daily ESAL loadings are determined as outlined in Art. 3.5.2. The total number of ESAL loadings for design is the cumulative number of ESAL loadings expected over the design life of the pavement. This value can be determined by assuming a growth rate or, if the pavement is being built on an existing alignment, by extrapolating past traffic patterns.

www.EngineeringEBooksPdf.com

Select Level of Reliability and Standard Deviation. The level of reliability and overall standard deviation can be selected using the guidelines discussed in Art. 3.5.3.

Determine Slab Thickness and Reinforcement. The design slab thickness is determined by using the design values as outlined above in the nomograph shown in Fig. 3.15. The design thickness is usually rounded up to the nearest 1/2 or 1 in (13 or 25 mm) depending on the local practice for specifying slab thickness. As mentioned in Art. 3.5.2, if the design thickness varies significantly from the thickness used to determine the equivalency factors, the equivalency factors should be recalculated and the thickness design checked. Determination of steel reinforcement content, if used, is detailed in Art. 3.1.1.

3.7 FLEXIBLE PAVEMENT DESIGN PROCEDURE

The steps involved in designing a flexible pavement using the AASHTO design equations are as follows:

1. Determine the effective resilient modulus of the subgrade.
2. Select the design serviceability loss.
3. Estimate the total number of 18-kip (80-kN) equivalent single-axle loads for the design period.
4. Select a level of reliability and the overall standard deviation.
5. Determine the pavement structural number.
6. Select the layer material type and determine the layer thickness.

Determine Effective Resilient Modulus. The first step in designing the thickness of a flexible pavement is the determination of the effective resilient modulus of the subgrade. The resilient modulus may be determined as described in Art. 3.5.4. In regions where large moisture variations, freeze and thaw, etc., will affect the strength of the subgrade soils and subgrade, AASHTO provides a procedure to modify the composite modulus of subgrade reaction. The seasonal variation in strength is determined using laboratory procedures or through the use of nondestructive testing (NDT). The seasonal strength of the subgrade is entered in Fig. 3.16. The relative damage is determined from the nomograph and the sum of relative damage divided by the total number of periods to determine the average relative damage factor. This factor is then entered in the nomograph to find the effective resilient modulus.

Select Design Serviceability Loss. Considerations in the selection of the design serviceability loss are the same as discussed for rigid pavements, Art. 3.6.

Estimate ESALs. The daily ESAL loadings are determined as outlined in Art. 3.5.2. The total number of ESAL loadings for design is the cumulative number of ESAL loadings expected over the design life of the pavement. This value can be determined by assuming a growth rate or, if the pavement is being built on an existing alignment, by extrapolating the past traffic patterns.

Select Level of Reliability and Standard Deviation. These selections are made from the guidelines discussed in Art. 3.5.3.

www.EngineeringEBooksPdf.com

Nomograph solves:

$$\log_{10} W_{18} = Z_R * S_o + 7.35 * \log_{10}(D+1) - 0.06 + \frac{\log_{10}\left(\frac{\Delta\,(\text{lb/in}^2)}{4.5-1.5}\right)}{1+\frac{1.624*10^7}{(D+1)^{8.46}}} + (4.22 - 0.32p_t) * \log_{10}\left[\frac{S'_C * C_d\left(D^{0.75}-1.132\right)}{215.63 * J\left(D^{0.75}-\frac{18.42}{(E_C/k)^{0.25}}\right)}\right]$$

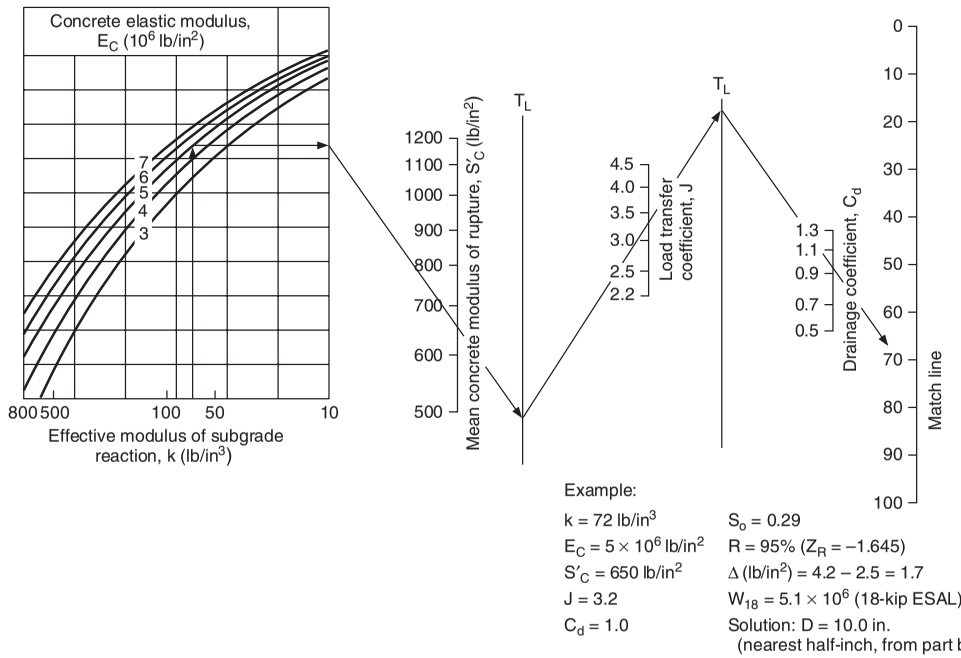

Example:

k = 72 lb/in^3	S_o = 0.29
$E_C = 5 \times 10^6$ lb/in^2	R = 95% (Z_R = –1.645)
S'_C = 650 lb/in^2	Δ (lb/in^2) = 4.2 – 2.5 = 1.7
J = 3.2	$W_{18} = 5.1 \times 10^6$ (18-kip ESAL)
C_d = 1.0	Solution: D = 10.0 in. (nearest half-inch, from part b)

FIGURE 3.15 Design chart for rigid pavements based on using mean values for each input variable. Conversions: 1 lb/in^2 = 6.895×10^{-3} MPa, 1 lb/in^3 = 271.4×10^{-4} N/mm^2, 1 in = 25.4 mm. (*From* Guide for Design of Pavement Structures, *American Association of State Highway and Transportation Officials, Washington, D.C., 1993, with permission*)

www.EngineeringEBooksPdf.com

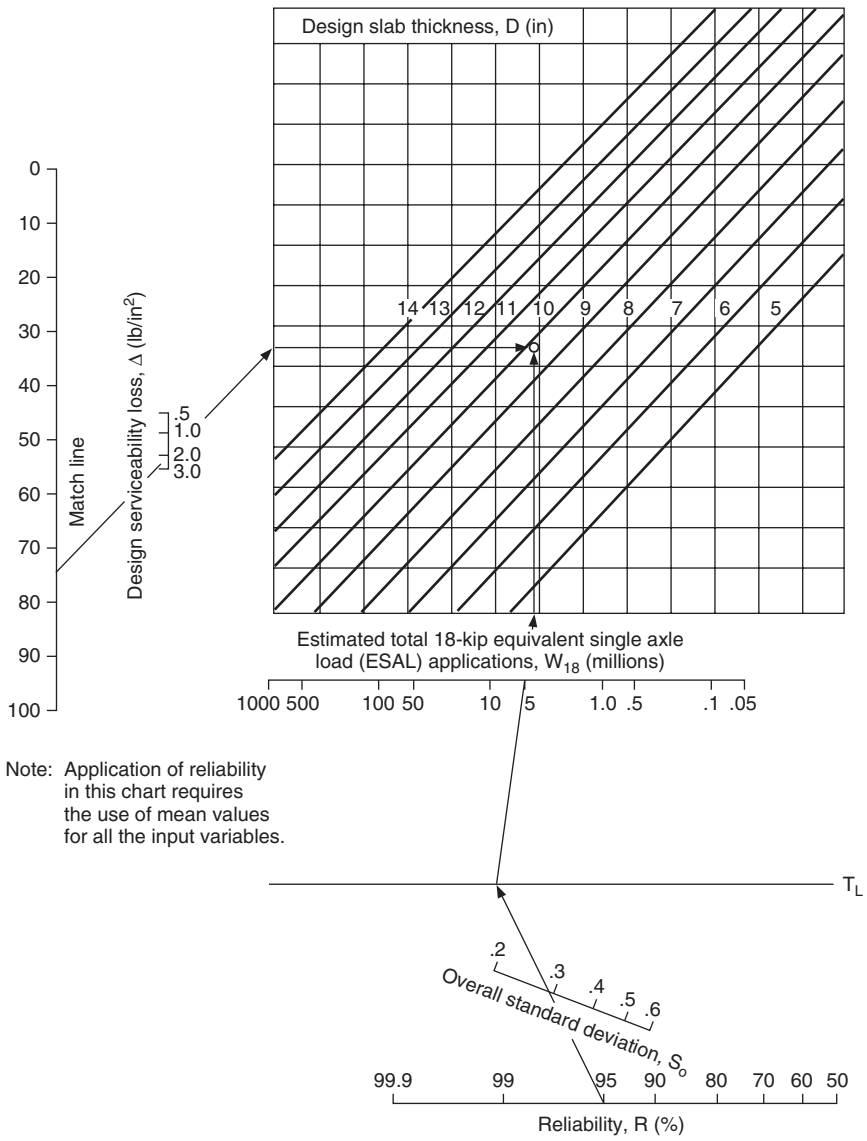

FIGURE 3.15 (*Continued*)

www.EngineeringEBooksPdf.com

Month	Roadbed Soil Modulus, M_R (lb/in^2)	Relative Damage, u_f
Jan.		
Feb.		
Mar.		
Apr.		
May		
June		
July		
Aug.		
Sept.		
Oct.		
Nov.		
Dec.		
Summation: Σu_f =		

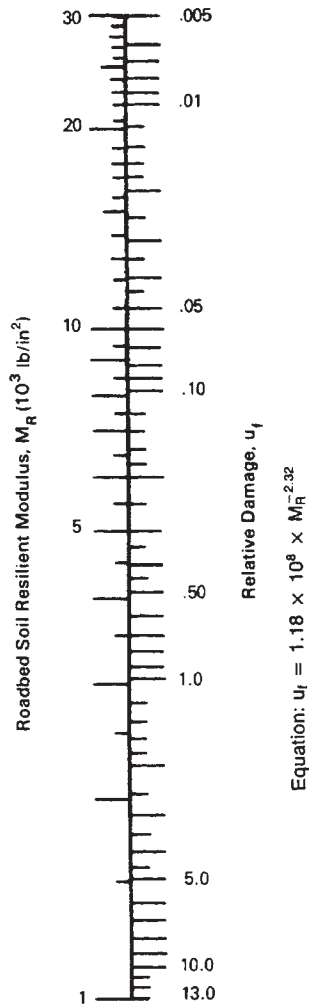

Average: $\bar{u}_f = \frac{\Sigma u_f}{n}$ = _____

Effective Roadbed Soil Resilient Modulus, M_R (lb/in^2) = _____ (corresponds to $\bar{u}_f$)

FIGURE 3.16 Chart for estimating effective roadbed soil resilient modulus for flexible pavements designed using the serviceability criteria. Conversion: 1 lb/in^2 = 6.895 × 10^{-3} MPa. (*From* Guide for Design of Pavement Structures, *American Association of State Highway and Transportation Officials, Washington, D.C., 1993, with permission*)

www.EngineeringEBooksPdf.com

Determine Pavement Structural Number. The flexible pavement process involves the calculation of a pavement structural number. This is an abstract number reflecting the relative strength contribution of all layers in the pavement buildup. The structural number SN is calculated using the design values determined as outlined above in the nomograph shown in Fig. 3.17. The design thickness for each layer is determined to satisfy the following equation:

$$\mathrm{SN} = a_1D_1 + a_2D_2m_2 + a_3D_3m_3$$

where a_1, a_2, a_3 = structural coefficients of surface, base, and subbase, respectively
D_1, D_2, D_3 = thickness of surface, base, and subbase, respectively, in
m_2, m_3 = drainage coefficients for base and subbase (see Table 3.25)

The structural coefficients of the asphalt layer, granular base, and subbase can be estimated using Figs. 3.18, 3.19, and 3.20, respectively, or can be estimated from Table 3.26.

Select Layer Material and Thickness. Once the structural coefficients are known, the thickness of the individual layers is determined by varying D_1, D_2, and D_3 until the calculated SN is equal to or greater than the required SN. Unbound bases are commonly specified to the nearest 1 in (25 mm), and asphalt concrete is normally specified to the nearest 1/4 in (6 mm). The procedure shown in Fig. 3.21 illustrates one method recommended for determining layer thickness. This procedure designs the upper layers to protect the lower layers.

3.8 PAVEMENT MANAGEMENT

Project-level pavement management is responsible for continuous evaluation of pavement's present serviceability, monitoring of the pavement loading rate, determination of the cause and rate of pavement deterioration, prediction of optimal time for intervention, and evaluation of the most economical rehabilitation strategy.

Pavement management can be applied at the project level or at the network level. Although both levels are very dependent upon one another, they are seldom applied for the same purpose. The network level applies to the whole system in a global sense. Network refers to systemwide averages and is used for system budgeting and performance modeling. This chapter addresses only the project-level aspects. Project-level pavement management is considered to be more complicated and more important than pavement design. Pavement management is applied throughout the life of a pavement, whereas pavement design is completed and forgotten once the pavement is initially in service.

3.8.1 Pavement Deterioration

Pavement deterioration or distress can be classified into two basic categories for all pavement types—structural and functional. The most serious category is structural. Structural deterioration results in reduced ability to carry load and a decreased pavement life. Functional deterioration can lead to and accelerate structural deterioration, but it is only related to ride quality and frictional characteristics. A third type is environmental deterioration, which is a form of material-related distress. Environmental deterioration affects pavement materials and will generally exhibit itself as either functional or structural deterioration.

www.EngineeringEBooksPdf.com

Nomograph solves:

$$\log_{10} W_{18} = Z_R * S_o + 9.36 * \log_{10}(SN + 1) - 0.20 + \frac{\log_{10}\left(\frac{\Delta\,(\text{lb/in}^2)}{4.2 - 1.5}\right)}{0.40 + \frac{1094}{(SN + 1)^{5.19}}} + 2.32 * \log_{10} M_R - 8.07$$

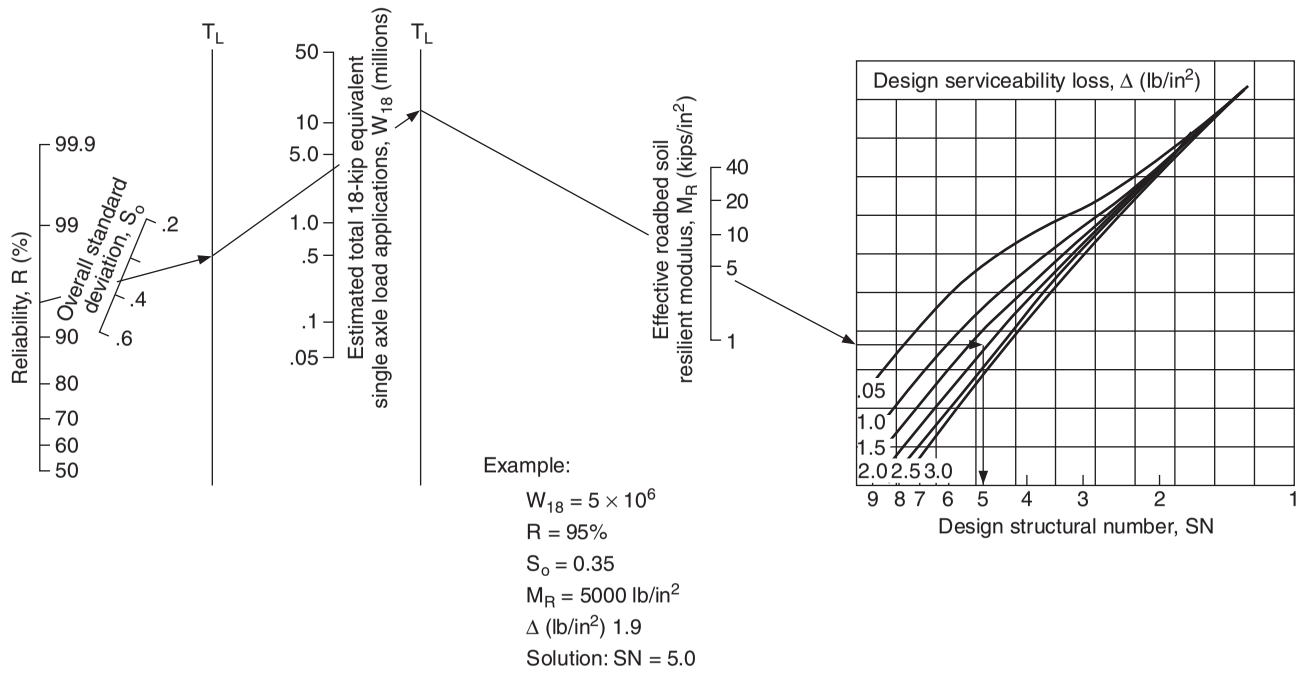

FIGURE 3.17 Design chart for flexible pavements based on using mean values for each variable. Conversions: 1 kip = 4448 N, 1 lb/in^2 = 6.895 × 10^{-3} MPa, 1 kip/in^2 = 6.895 MPa. (*From* Guide for Design of Pavement Structures, *American Association of State Highway and Transportation Officials, Washington, D.C., 1993, with permission*)

www.EngineeringEBooksPdf.com

TABLE 3.25 Recommended m_i Values for Modifying Structural Layer Coefficients of Untreated Base and Subbase Materials in Flexible Pavements

Quality of drainage	Percent of time pavement structure is exposed to moisture levels approaching saturation: Less than 1%	1–5%	5–25%	Greater than 25%
Excellent	1.40–1.35	1.35–1.30	1.30–1.20	1.20
Good	1.35–1.25	1.25–1.15	1.15–1.00	1.00
Fair	1.25–1.15	1.15–1.05	1.00–0.80	0.80
Poor	1.15–1.05	1.05–0.80	0.80–0.60	0.60
Very poor	1.05–0.95	0.95–0.75	0.75–0.40	0.40

Source: *Guide for Design of Pavement Structures,* American Association of State Highway and Transportation Officials, Washington, D.C., 1993, with permission.

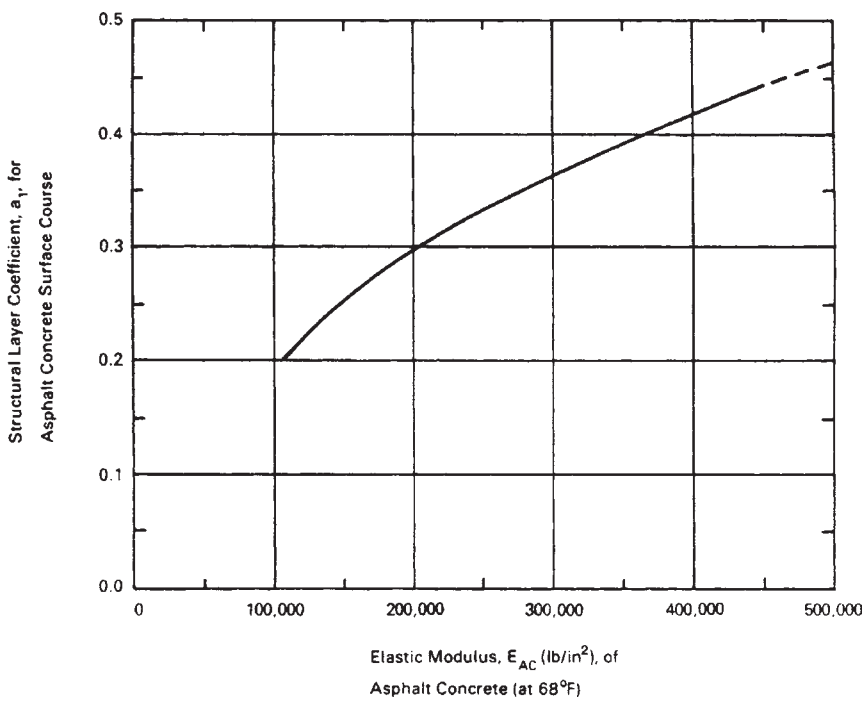

FIGURE 3.18 Chart for estimating structural layer coefficient (a_1) of dense-graded asphalt concrete based on the resilient modulus. Conversion: 1 lb/in^2 = 6.895×10^{-3} MPa. (*From* Guide for Design of Pavement Structures, *American Association of State Highway and Transportation Officials, Washington, D.C., 1993, with permission*)

www.EngineeringEBooksPdf.com

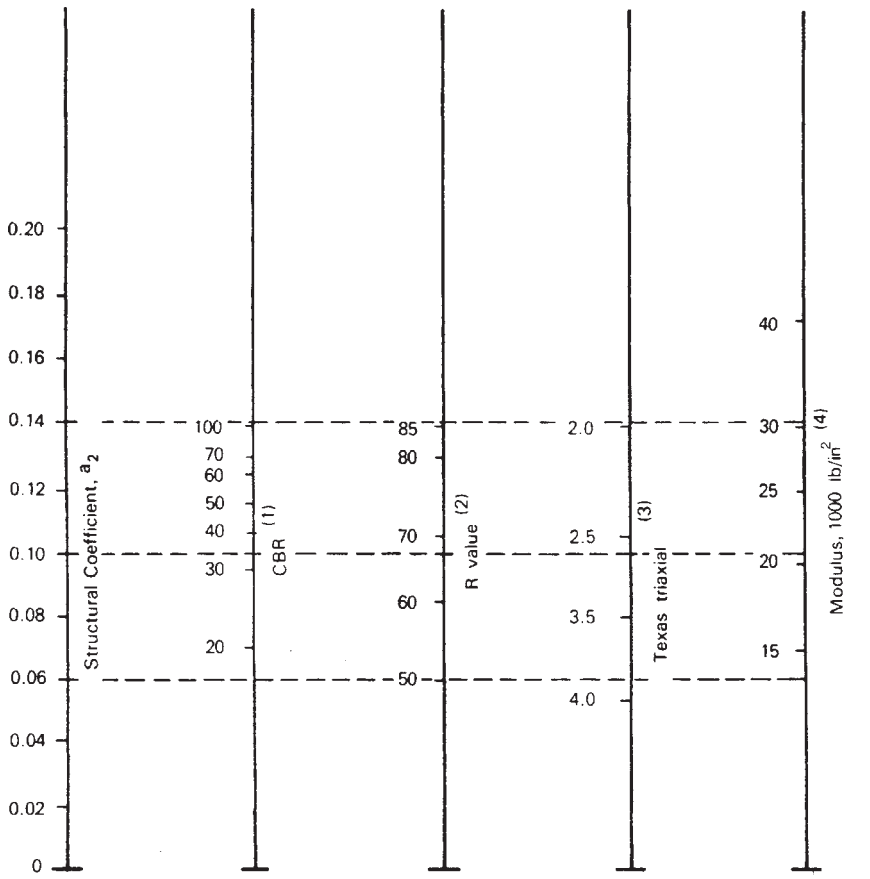

(1) Scale derived by averaging correlations obtained from Illinois.
(2) Scale derived by averaging correlations obtained from California, New Mexico, and Wyoming.
(3) Scale derived by averaging correlations obtained from Texas.
(4) Scale derived on NCHRP project.

FIGURE 3.19 Variation in granular base layer coefficient (a_2) with various base strength parameters. Conversion: 1 lb/in^2 = 6.895 × 10^{-3} MPa. (*From* Guide for Design of Pavement Structures, *American Association of State Highway and Transportation Officials, Washington, D.C., 1993, with permission*)

Pavement deterioration is an important measurement for a pavement engineer. To determine the remaining life of a pavement, or the amount of pavement repair required to extend a pavement life for a given time period, or the most appropriate time for pavement repair, the amount and type of deterioration in a pavement must be measured. Methods of measurement of pavement deterioration vary, but most are similar in that they all require a visual inspection of the pavement and a somewhat subjective distress rating.

www.EngineeringEBooksPdf.com

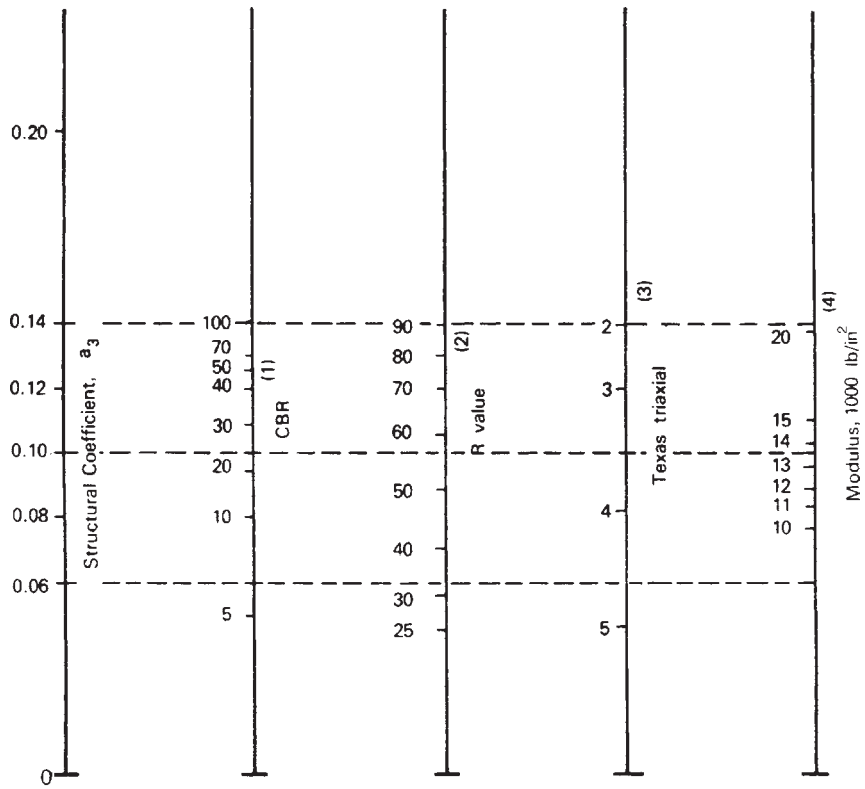

(1) Scale derived from correlations from Illinois.

(2) Scale derived from correlations obtained from the Asphalt Institute, California, New Mexico, and Wyoming.

(3) Scale derived from correlations obtained from Texas.

(4) Scale derived on NCHRP project.

FIGURE 3.20 Variation in granular base layer coefficient (a_3) with various subbase strength parameters. Conversion: 1 lb/in^2 = 6.895 × 10^{-3} MPa. (*From* Guide for Design of Pavement Structures, *American Association of State Highway and Transportation Officials, Washington, D.C., 1993, with permission*)

3.8.2 Jointed Rigid Pavement Distress—Visual Rating

Jointed rigid pavement deterioration is exhibited in any combination of the following distresses:

Surface Deterioration. Surface deterioration (Fig. 3.22) is the result of loss of cement at the surface of the slab (scaling). It is generally caused by excessive surface water and finishing practice, or the loss of both small aggregates and cement caused by abrasion from tires. Surface deterioration affects the noise level of a pavement and cannot be repaired. Surface deterioration by itself is generally of little concern.

www.EngineeringEBooksPdf.com

TABLE 3.26 Pavement Coefficients for Flexible Section Design, Louisiana

	Strength*	Coefficient
I. Surface course†		
Asphaltic concrete		
Types 1, 2, and 4 BC and WC	1000+	0.40
Types 3 WC	1800+	0.44
BC	1500+	0.43
II. Base course		
Untreated‡		
Sand clay gravel—grade A	3.3−	0.08
Sand clay gravel—grade B	3.5−	0.07
Shell and sand-shell	2.2−	0.10
Cement-treated§		
Soil-cement	300+	0.15
Sand clay gravel—grade B	500+	0.18
Shell and sand-shell	500+	0.18
Shell and sand-shell	650+	0.23
Lime-treated‡		
Sand-shell	2.0−	0.12
Sand clay gravel—grade B	2.0−	0.12
Asphalt treated†		
Hot-mix base course (type 5A)	1200+	0.34
Hot-mix base course (type 5B)	800+	0.30
III. Subbase course‡		
Lime-treated sand clay gravel—grade B	2.0−	0.14
Shell and sand-shell	2.0−	0.14
Sand clay gravel—grade B	3.5−	0.11
Lime-treated soil	3.5−	0.11
Old gravel or shell roadbed (8-in thickness) (200 mm)	—	0.11
Sand (R-value)	55+	0.11
Suitable material—A−6 (PI = 15−)	—	0.04
IV. Coefficients for bituminous concrete overlay		
Base course		
Bituminous concrete pavement		
New		0.40
Old		0.24
Portland cement concrete pavement		
New		0.50
Old, fair condition		0.40
Old, failed		0.20
Old, pumping		0.10
Old, pumping (to be undersealed)		0.35

*Refer to the following footnotes for strength designations. See the AASHTO guide referenced below for further details.

†Marshall stability number.

‡Texas triaxial values.

§Compressive strength, lb/in^2 (1 lb/in^2 = 6.895×10^{-3} MPa)

Source: *Interim Guide for Design of Pavement Structures,* American Association of State Highway and Transportation Officials, Washington, D.C., 1972 (rev. 1981), with permission.

www.EngineeringEBooksPdf.com

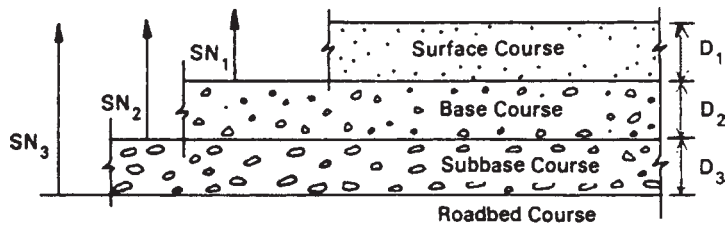

$$D^*_1 \geq \frac{SN_1}{a_1}$$

$$SN^*_1 = a_1 D^*_1 \geq SN_1$$

$$D^*_2 \geq \frac{SN_2 - SN^*_1}{a_2 m_2}$$

$$SN^*_1 + SN^*_2 \geq SN_2$$

$$D^*_3 \geq \frac{SN_3 - (SN^*_1 + SN^*_2)}{a_3 m_3}$$

FIGURE 3.21 Procedure for determining thicknesses of layers using a layered analysis approach. *a, D, m,* and SN are defined in the text and are minimum required values. An asterisk indicates that the value actually used is represented; this value must be equal to or greater than the required value. (*From* Guide for Design of Pavement Structures, *American Association of State Highway and Transportation Officials, Washington, D.C., 1993, with permission*)

Popouts. Figure 3.23 shows a typical popout. Popouts are generally due to high steel placement, but also may be the result of poor-quality aggregate, which disintegrates, causing cavities at the surface of the slab. Popouts affect the noise level of a pavement and cannot be repaired. Popouts by themselves are generally of little concern.

Pumping. Pumping is defined as the ejection of subbase or subgrade materials from under a pavement through a joint or crack and out onto the pavement and shoulder. The loss of subbase or subgrade material causes loss of support and leads to corner breaks and faulting. The existence of pumping can be determined visually by the presence of soil stains at the joints or cracks on the adjacent shoulder.

Faulting. Faulting is a result of the loss of load transfer across a joint or crack, which causes the slab on one side of the joint or crack to be at a lower elevation than the slab on the other side. Faulting (Fig. 3.24) is generally a result of pumping. Faulting affects the noise level and the smoothness of a pavement. It is generally considered excessive when faulting exceeds 1/4 in (6 mm). Faulting can be corrected by pavement grinding, joint or crack repair, or slab jacking. However, unless load transfer

www.EngineeringEBooksPdf.com

FIGURE 3.22 Example of surface deterioration in jointed rigid pavement.

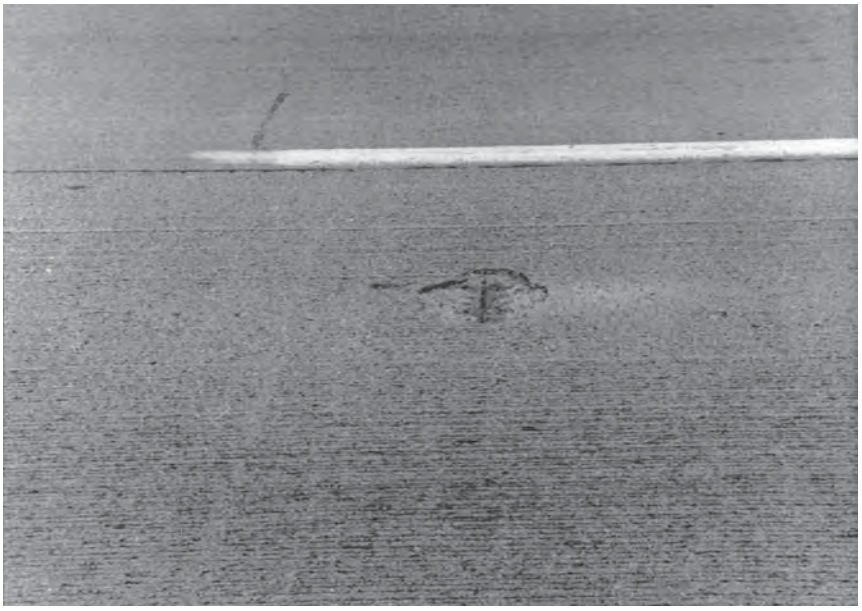

FIGURE 3.23 Example of popout in jointed rigid pavement.

www.EngineeringEBooksPdf.com

FIGURE 3.24 Example of faulting at joint in rigid pavement; pavement on right is about 1/2 in (13 mm) lower than that on left.

is established across the joint or crack and any existing voids under the joint or crack are filled, faulting can be expected to return.

Settlement. Settlement is the result of poor construction practice. It may be due to either poor compaction over a utility, poor grade control during the final grading of the subgrade, or possible localized soil conditions that cannot resist additional overburden or increased loading. Settlement, which is displayed by a depression in the profile of the pavement, affects smoothness. Repair methods consist of replacement to the corrected profile, or an overlay of some type. Settlements are generally of little concern unless they are numerous and severely affect the ride of the pavement.

Joint Spalling. Figure 3.25 shows typical joint spalling, defined as deterioration of the concrete slab around transverse or longitudinal joints. The deterioration is generally only to partial depth and is visible from the surface of the slab. Joint spalling may result from poor-quality aggregates (D cracking); improperly placed dowels, tie-bars, or dowel baskets; or excessive expansion of the concrete (pressure). Repair of spalled joints can be accomplished by either partial-depth joint repairs or full-depth joint repairs.

www.EngineeringEBooksPdf.com

FIGURE 3.25 Example of joint spalling in rigid pavement.

Transverse Cracking. A significant transverse crack is depicted in Fig. 3.26. Transverse cracking severity varies from hairline cracks to cracks sufficiently wide to completely separate the slab into two distinct pieces. Hairline cracks are expected in reinforced concrete and pose no expected problems. In plain concrete pavement, a hairline crack can be a sign of future problems. Without reinforcing mesh to hold the crack together, the long-term performance of the slab is questionable; however, as long as the crack is tightly closed (hairline), it poses no problem. Regardless of

FIGURE 3.26 Example of transverse crack in jointed rigid pavement.

www.EngineeringEBooksPdf.com

FIGURE 3.27 Example of longitudinal crack in jointed rigid pavement.

whether the pavement contains mesh, cracks that have separated by a distance greater than one-half of the largest aggregate diameter are generally considered to be failed.

Longitudinal Cracking. Longitudinal cracking, such as shown in Fig. 3.27, may be caused by excessive lane widths, longitudinal joints that were not sawed properly, or local conditions that increase the stress level along the pavement. Longitudinal cracking is primarily a concern when it occurs within the wheel track. Where a longitudinal crack is faulted, spalled, pumping, or working and is in the wheel path, it can become a safety hazard.

Corner Breaks. As illustrated in Fig. 3.28, corner breaks are cracks found at the corner of the slab. They usually propagate from the transverse joint to the longitudinal joint. Corner breaks are full-depth cracks and are generally the result of loss of support under the corner of the slab.

3.8.3 Continuously Reinforced Rigid Pavement Distress—Visual Rating

Continuously reinforced concrete pavement deterioration is exhibited by the same distresses discussed for jointed concrete pavement along with the following additional considerations.

Settlement. As previously stated, settlement as displayed by a depression in the profile of the pavement affects the smoothness of a pavement. It may be the result of poor construction practice such as poor compaction over a utility, poor grade control during final grading of the subgrade, or localized soil conditions that cannot resist additional overburden or increased loading. Repair methods consist of replacement to the corrected profile or an overlay. However, settlements are more predominant in CRC pavement, because transverse cracks are inherently more numerous. With the transverse cracking at a spacing of 5 to 8 ft (1.5 to 2.4 m), the pavement is able to bend more freely and does not bridge weak foundations as effectively.

www.EngineeringEBooksPdf.com

FIGURE 3.28 Example of corner break in jointed rigid pavement.

Transverse Cracking. Although CRC pavement is designed to have transverse cracks, the cracks should be spaced properly. Transverse cracks spaced too closely (less than 3 ft (0.9 m), as illustrated in Fig. 3.29) have a good chance of interconnecting, because they do not form uniformly straight and perpendicular to the centerline. Thus, as they interconnect, spalling will occur and pavement failures will result. On the other hand, transverse cracks spaced too far apart create higher stresses than the reinforcement can tolerate, and this can also result in pavement failures. Although

FIGURE 3.29 Example of transverse cracks spaced too closely in continuously reinforced rigid pavement.

www.EngineeringEBooksPdf.com

FIGURE 3.30 Example of punchout in continuously reinforced rigid pavement.

FIGURE 3.31 Example of raveling in flexible pavement.

www.EngineeringEBooksPdf.com

incorrect transverse crack spacing is not a distress by itself, it must be monitored to help pavement engineers predict failures. Once failures are evident, they must be repaired by full-depth pavement removal and replacement. It is important to reestablish continuity of the reinforcement within the repair.

Punchouts. Figure 3.30 shows a punchout in a CRC pavement. A punchout is formed by the combination of intersecting transverse and longitudinal cracks over an area of weak foundation.

3.8.4 Flexible Pavement Distress—Visual Rating

Flexible pavement deterioration is exhibited in any combination of the following distresses.

Raveling. Raveling, as shown in Fig. 3.31, is the result of loss of small aggregates from the pavement surface. Raveling can be caused by oxidation of the mix, improper mix design, segregation, or lack of compaction.

Bleeding. Bleeding is the flushing of excess asphalt cement to the surface of the pavement, as evident in Fig. 3.32. Asphalt cement concrete mixtures are more prone to

FIGURE 3.32 Example of bleeding in flexible pavement.

www.EngineeringEBooksPdf.com

FIGURE 3.33 Example of small pothole in flexible pavement.

bleed with hotter pavement surface temperatures. Bleeding is a result of excess asphalt cement in the mix and/or low air voids in the mix.

Potholes. One of the most common problems is the development of a pothole (Fig. 3.33). Potholes are small, localized, but deep pavement failures characterized by a round shape. Potholes are caused by weak and wet subbase and/or subgrade. In freeze-thaw environments, potholes are generally formed during the thaw.

Rutting. Rutting (Fig. 3.34) is the longitudinal deformation of the pavement structure within the wheel tracks. Where found only in the uppermost portions of the pavement, it is caused by poor mixture design and lack of stability. Where rutting is deep-seated and found throughout the depth of the pavement structure, it is caused by inadequate pavement structure above the founding layers or by a weak, wet subgrade.

Corrugation. Corrugations (Fig. 3.35) are transverse waves in the pavement profile, which are found most generally at stop lights, at stop signs, or on hills. Corrugations are found in the wheel track and are the result of acceleration and deceleration of heavy trucks in a regular pattern on the roadway surface. The stability of the asphalt mix can also be a contributing factor.

Longitudinal Cracking. Longitudinal cracking, such as shown in Fig. 3.36, is most often found at paving joints established during construction. The construction joint is most generally specified at lane lines. As weathering of the pavement takes place, the longitudinal joint ravels and eventually spalls. Longitudinal cracks found at locations other than paving joints are due to thermal shrinkage from seasonal temperature changes.

Transverse Cracking. As illustrated by Fig. 3.37, transverse cracking is best described by cracks that form across the pavement perpendicular to the centerline.

www.EngineeringEBooksPdf.com

FIGURE 3.34 Example of rutting in flexible pavement.

Transverse cracking is caused by thermal shrinkage from seasonal temperature changes and age hardening of the binder.

Block Cracking. Block cracking is the combination of longitudinal and transverse cracking, as shown in Fig. 3.38. As the cracks worsen with time as a result of weathering, they join each other and form block cracking.

FIGURE 3.35 Example of corrugations in flexible pavement.

www.EngineeringEBooksPdf.com

FIGURE 3.36 Example of longitudinal cracking in flexible pavement.

Wheel Track Cracking. Wheel track cracking is shown in Fig. 3.39. It can be described as mostly longitudinal cracks found at the surface of the pavement within a 3-ft-wide (0.9-m) strip considered to be the wheel track. Wheel track cracking ranges from a single longitudinal crack to a series of interconnected longitudinal cracks, also referred to as alligator cracking. Wheel track cracking is commonly considered to be the most alarming distress found in a flexible pavement. This type of cracking starts at the bottom of the pavement structure and is transmitted to the surface. By the time alligator cracking can be detected by visual inspection, the pavement is generally considered to be failed.

FIGURE 3.37 Example of transverse cracking in flexible pavement.

www.EngineeringEBooksPdf.com

FIGURE 3.38 Example of block cracking in flexible pavement.

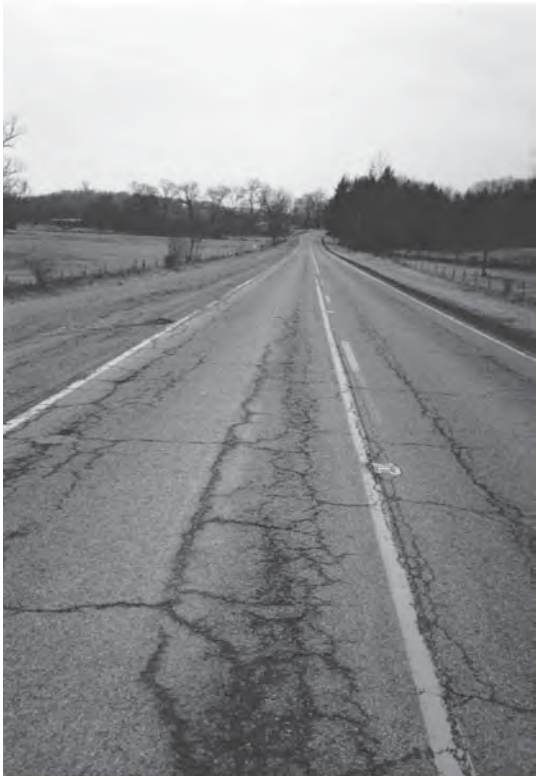

FIGURE 3.39 Example of wheel track cracking in flexible pavement.

www.EngineeringEBooksPdf.com

FIGURE 3.40 Example of edge cracking in flexible pavement.

Edge Cracking. Edge cracking, as shown in Fig. 3.40, is a series of short longitudinal or irregular-shaped cracks at the outer 15 in (380 mm) of the pavement. Edge cracking is a result of lack of support outside the pavement edge.

3.8.5 Composite Pavement Distress—Visual Rating

Composite pavement deterioration is exhibited in a combination of some flexible pavement distresses and some rigid pavement distresses. The most prominent composite pavement distresses, which were defined under flexible or rigid pavement, are raveling, bleeding, rutting, corrugations, pumping, and various slab distresses.

3.8.6 Investigative Methods

If a pavement exhibits structural distresses, such as cracking, patching, potholes, faulting, etc., further evaluation may be necessary to identify the cause of the distress, the extent,

www.EngineeringEBooksPdf.com

and the strength of the existing pavement system and subgrade. Roadways with high traffic volumes, especially those with high truck volumes, should also be evaluated prior to rehabilitation.

Pavement Coring. Without question, the simplest and most reliable method of identifying pavement deterioration is pavement coring. Pavement coring can be used to investigate many different pavement distress factors, from rigid joint deterioration to stripping in asphalt concrete pavement layers. The following are examples of pavement cores taken in various investigations.

Figure 3.41 shows a core of a composite pavement taken at a transverse joint. The core reveals a tight joint with aggregate interlock and little or no deterioration. The asphalt overlay is left intact. However, during the coring operation, the asphalt portion of the core should be inspected for delaminations between paving layers, rutting of any layers, or stripping of the asphalt from the aggregate.

Figure 3.42 shows a core hole in the pavement taken at a midpanel transverse crack. A wealth of information can be obtained by inspection of the core hole. The core hole reveals aggregate interlock to be questionable. A close inspection revealed the reinforcing mesh to be rusted and broken, not cut by the coring operation. Because the core hole indicates most of the aggregate interlock is lost, this crack can be considered a working crack and should be repaired.

Figures 3.43 and 3.44 show the remains of cores taken at transverse joints. It is obvious that these joints need a full-depth repair. Cores should also be taken away from the joint to determine required width of repair.

Figure 3.45 shows a core of an asphalt pavement that indicates a delamination approximately 3 in (75 mm) from the surface. Several cores should be taken to verify the extent of the flaw. A delamination found in an asphalt pavement such as this could result in debonding of the surface layer. If warranted, asphalt milling may be required to a depth sufficient to remove the delamination.

FIGURE 3.41 Pavement core taken at transverse joint in composite pavement.

www.EngineeringEBooksPdf.com

FIGURE 3.42 Hole in pavement after core was drilled at transverse crack in composite pavement.

FIGURE 3.43 Crumbled core taken from transverse joint in rigid pavement.

www.EngineeringEBooksPdf.com

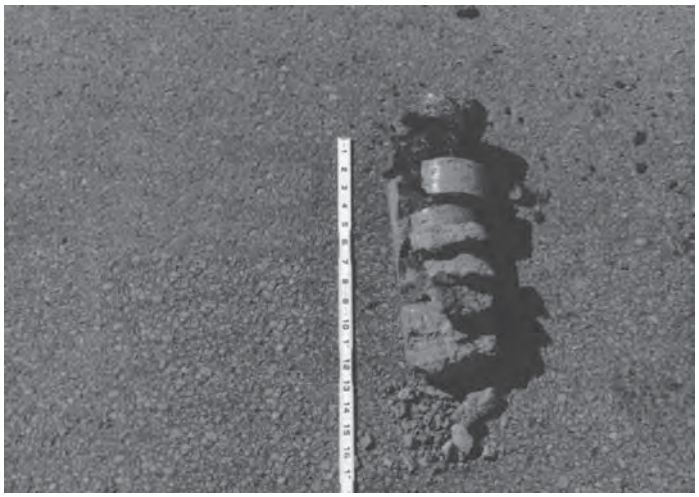

FIGURE 3.44 Crumbled core taken from transverse joint in composite pavement.

Dynamic Cone Penetrometer. The dynamic cone penetrometer (DCP) is commonly used to determine the stiffness of the base and/or subgrade. As shown in Fig. 3.46, the DCP consists of a 13/16-in (21-mm) diameter, 60° cone mounted on a 5/8-in (16-mm) rod. A 17.6-lb (8-kg) weight is attached to the top of the DCP in such a manner that it can be raised 22.6 in (574 mm) and released while the cone is resting on the base or subgrade.

FIGURE 3.45 Core from flexible pavement indicating delamination about 3 in (75 mm) from surface.

www.EngineeringEBooksPdf.com

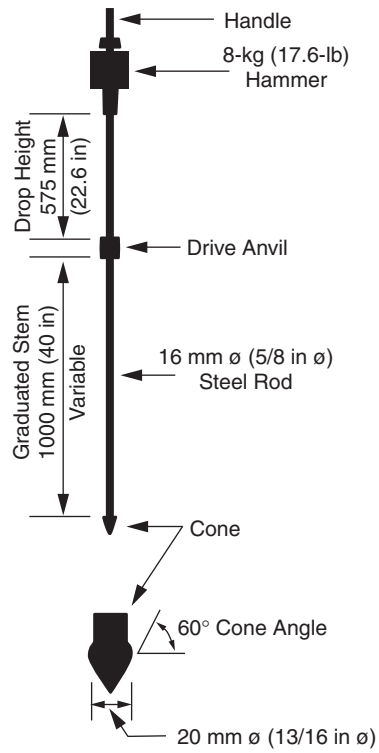

FIGURE 3.46 Schematic of dynamic cone penetrometer. (*From Pavement Technology Advisory 97-7,* Dynamic Cone Penetrometer, *Illinois Department of Transportation, Bureau of Materials and Physical Research, 1997, with permission*)

The penetration per drop of the weight is correlated to the CBR or modulus of the base or subgrade. Figure 3.47 shows one such correlation used by the Illinois Department of Transportation. The DCP is popular because it is a relatively inexpensive device that can rapidly determine the stiffness of a base or subgrade in the field.

Nondestructive Testing. The most common of the nondestructive testing (NDT) methods is a deflection measuring device such as the falling weight deflectometer (FWD), road rater, and Dynaflect. These devices place a load, either impulse or cyclic, on the pavement and measure the deflection of the pavement using three or more geophones placed at various distances from the load. The measured deflection at each sensor can be described as a "deflection bowl" (see Fig. 3.48). The deflection bowl can be used to evaluate the pavement and to determine the stiffness of the pavement system and individual pavement layers. Stiffness of the layers can be determined using any one of numerous backcalculation programs such as Modulus, Modcomp, Evercalc, etc.; many of which are available in the public domain. The calculated stiffness can then be used to design a rehabilitation treatment. The various deflection parameters shown in Fig. 3.48 can also be used to evaluate the pavement. Table 3.27

www.EngineeringEBooksPdf.com

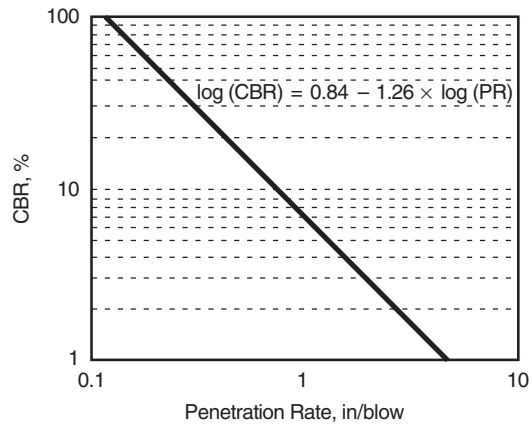

FIGURE 3.47 Correlation of California Bearing Ratio (CBR) and penetration rate. Conversion: 1 in = 25.4 mm. (*From Pavement Technology Advisory 97-7,* Dynamic Cone Penetrometer, *Illinois Department of Transportation, Bureau of Materials and Physical Research, 1997, with permission*)

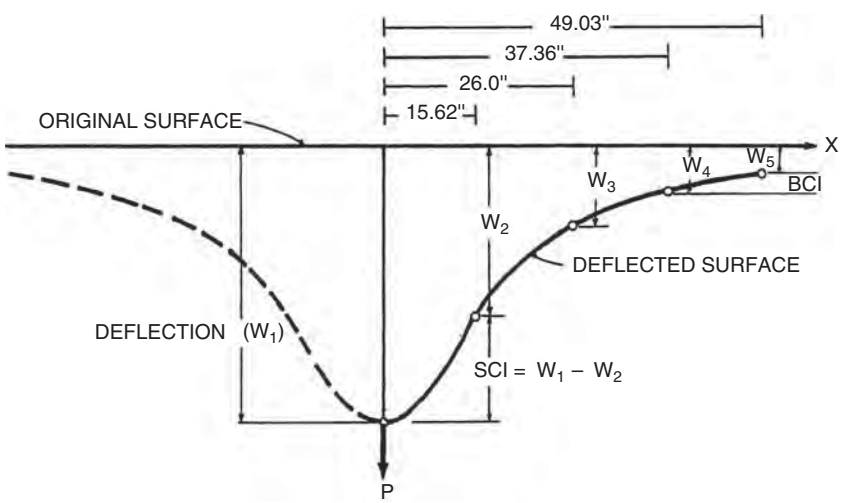

FIGURE 3.48 Typical Dynaflect deflection bowl deflection basin parameters. W_{MAX} = deflection (W_1); SCI = surface curvature index (numerical difference between sensors 1 and 2); BCI = base curvature index (numerical difference between sensors 4 and 5); SPR% = spreadability ($\Sigma W/5W_1 \times 100$). Conversion: 1 in = 25.4 mm. (*From K. Majidzadeh and V. Kumar,* Manual of Operation and Use of Dynaflect for Pavement Evaluation, *Resource International, Inc., Columbus, Ohio, Report No. FHWA/OH-83/004, October 1983, with permission*)

and Figs. 3.49 through 3.52 show an example of how the Dynaflect deflections can be used to determine subgrade and pavement conditions.

Ground Penetrating Radar. Improved analysis software has moved the ground penetrating radar (GPR) from research to common usage. This GPR consists of a transmitter

www.EngineeringEBooksPdf.com

TABLE 3.27 Joint Evaluation of Rigid and Composite Pavements

Dynaflect SCI ($W_1 - W_2$)	Joint condition
< 0.05	Probably frozen
0.05–0.11	Good load transfer
0.11–0.23	Fair load transfer
> 0.23	Poor load transfer

Source: K. Majidzadeh and V. Kumar, *Manual of Operation and Use of Dynaflect for Pavement Evaluation,* Resource International, Inc., Columbus, Ohio, Report No. FHWA/OH-83/004, October 1983, with permission.

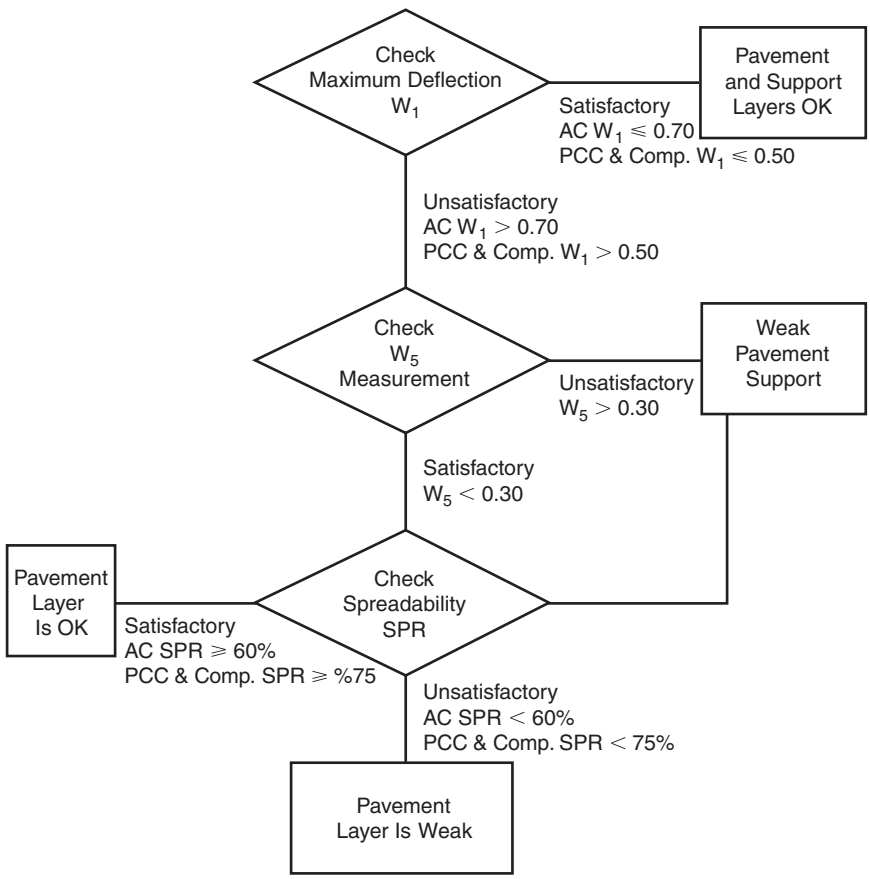

FIGURE 3.49 Rigid and flexible (thickness >6 in or 150 mm) pavement evaluation from Dynaflect measurements. (*From K. Majidzadeh and V. Kumar,* Manual of Operation and Use of Dynaflect for Pavement Evaluation, *Resource International, Inc., Columbus, Ohio, Report No. FHWA/OH-83/004, October 1983, with permission*)

www.EngineeringEBooksPdf.com

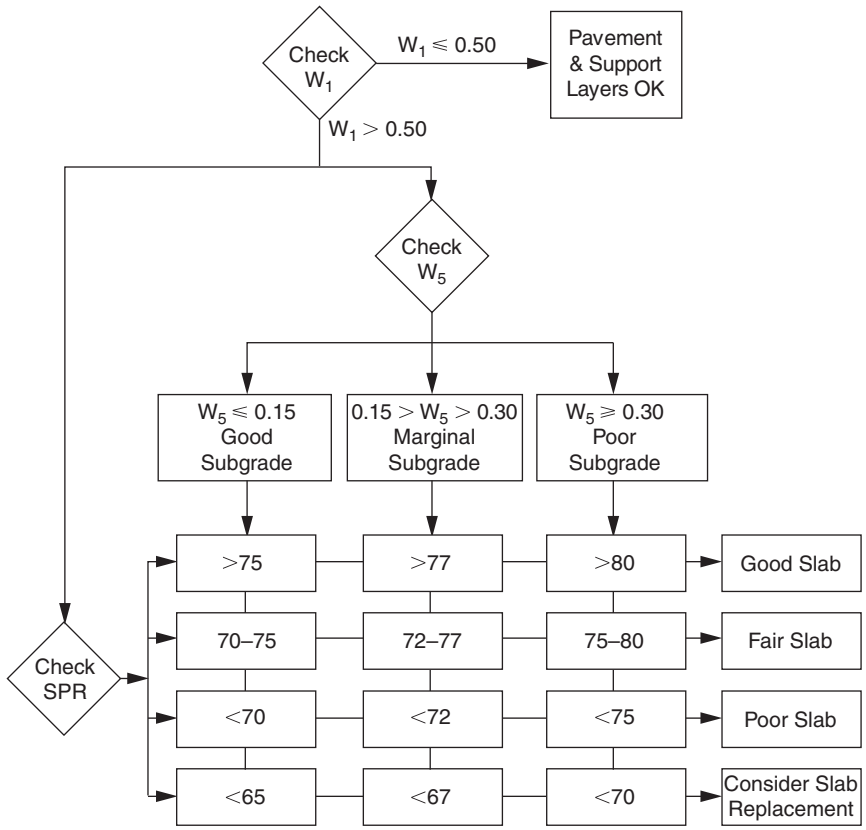

FIGURE 3.50 Evaluation of rigid and composite pavements from Dynaflect measurements. (*From K. Majidzadeh and V. Kumar,* Manual of Operation and Use of Dynaflect for Pavement Evaluation, *Resource International, Inc., Columbus, Ohio, Report No. FHWA/OH-83/004, October 1983, with permission*)

and receiver. The GPR transmits pulses of electromagnetic energy at various frequencies into the pavement system. The pulses are reflected back to the receiver by the interface of the various pavement layers. The dielectric constant of the various pavement layers is determined by coring the pavement and calibrating the GPR. The GPR can be used to determine pavement layer thicknesses, locate voids, and locate areas with high moisture. Use of the GPR has been standardized in ASTM D-4748.

Spectral Analysis of Surface Waves. Spectral analysis of surface waves (SASW) is currently a research tool but may find use as an evaluation tool in the near future. As shown in Fig. 3.53, two or more accelerometers are attached to the pavement in line with the test point. An instrumented hammer is used to generate surface waves. The accelerometers measure the travel time of the surface waves. By varying the distance between two accelerometers or by using multiple accelerometers, data can be gathered for the deeper pavement layers. Analysis of the surface waves can be used to determine the modulus and thickness of each layer in the pavement surface.

www.EngineeringEBooksPdf.com

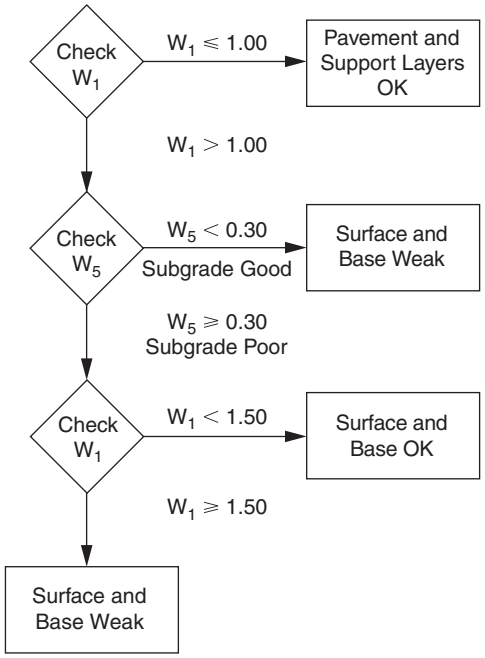

FIGURE 3.51 Evaluation of thin (thickness 4 to 6 in) asphalt pavements from Dynaflect measurements. (*From K. Majidzadeh and V. Kumar,* Manual of Operation and Use of Dynaflect for Pavement Evaluation, *Resource International, Inc., Columbus, Ohio, Report No. FHWA/OH-83/004, October 1983, with permission*)

3.9 METHODS OF PAVEMENT REHABILITATION

Once a pavement is determined to have unacceptable smoothness or has lost its ability to properly transport goods, it is reasonable to determine the best strategy to return the pavement to its original intended function. Many of the decisions that define the point where corrective action should be taken are management decisions and can be addressed properly only in a comprehensive study of pavement management data. Many considerations must be addressed before determining a list of good rehabilitation options. Leading rehabilitation techniques are reviewed in the following articles.

3.9.1 Rehabilitation of Rigid Pavement

CPR. The most common method of restoration for jointed pavement, both reinforced and nonreinforced, is termed *concrete pavement restoration* (*CPR*). CPR includes load transfer, restoration, joint removal and replacement, construction of rigid shoulders (if not already present), profile grinding to reestablish smoothness, and usually resealing joints and sealing any cracks. The CPR technique is only used when nondestructive testing measurements indicate that an asphalt overlay is not needed for the future

www.EngineeringEBooksPdf.com

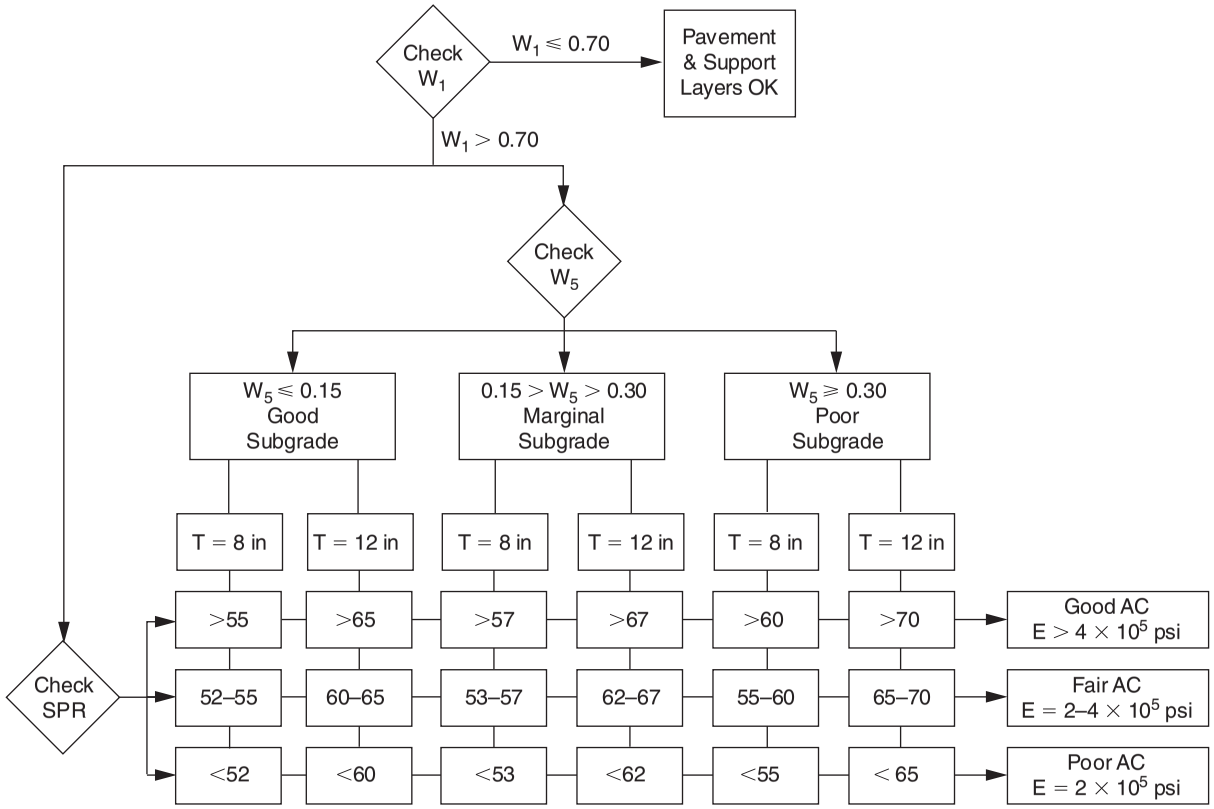

FIGURE 3.52 Evaluation of thick (thickness 8 to 12 in or 200 to 300 mm) flexible pavements from Dynaflect measurements. Conversion: 1 psi = 6.895×10^{-3} MPa. (*From K. Majidzadeh and V. Kumar,* Manual of Operation and Use of Dynaflect for Pavement Evaluation, *Resource International, Inc., Columbus, Ohio, Report No. FHWA/OH-83/004, October 1983, with permission*)

www.EngineeringEBooksPdf.com

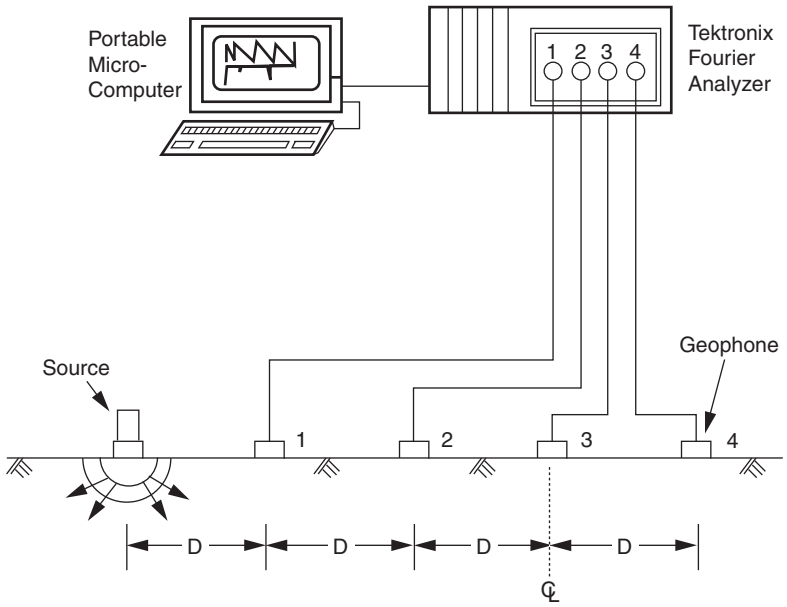

FIGURE 3.53 Schematic diagram of spectral analysis of surface waves (SASW) testing setup. (*From S. Nazarian, D. Yuan, and M. R. Baker,* Rapid Determination of Moduli with Spectral-Analysis-of-Surface-Waves Method, *The University of Texas at El Paso, El Paso, Texas, Report No. TX-94 1243-1, November 1995, with permission*)

design traffic. The disadvantage of this type of treatment is that, if the joints are not repaired properly, they will fail prematurely. Joint repair quantities are difficult to estimate, because joints continue to fail between the time the rehabilitation was designed and the time construction begins. The advantage of this type of treatment is that it utilizes the strength of existing pavement rather than an overlay, so overhead clearance problems are postponed or eliminated.

Repair and Overlay. When nondestructive testing measurements indicate that the existing slab thickness is insufficient to carry future design traffic, a common technique is to repair failed joints or pavement and add an asphalt overlay. Generally, rigid repairs are preferred over flexible repairs. Flexible repairs in a rigid pavement do nothing to reestablish load transfer across the failed joint. Flexible repairs also have a tendency to heave because they are weak in compression and the rigid pavements expand during hot weather. Flexible repairs allow joints to open up beyond the design of the joint sealant, causing the joint sealant to fail. Finally, flexible repairs reduce pressure in a pavement and allow midpanel cracks to open up and lose aggregate interlock. The advantages of flexible repairs are the favorable cost and construction time. Disadvantages of rigid repairs include the construction complexity and time. It is important to realize that the biggest drawback of the repair and overlay strategy is the inability to estimate the amount of repair required at each pavement failure and, for jointed pavements, the number of joints that need repair. Designed overlays are usually thin (3 to 6 in or 75 to 150 mm). In cold climates, joints usually reflect through the

www.EngineeringEBooksPdf.com

overlay after one or two winters. Joint reflection cracking can be addressed by sawing and sealing a joint in the asphalt overlay at the exact same location as the joint in the underlying rigid pavement. Failure to align the flexible joint with the rigid joint will result in premature joint spalling of the asphalt layer.

Bonded Concrete Overlay. Another technique to increase pavement structural capacity is to bond additional concrete to the surface of the existing concrete pavement. The required overlay thickness is determined by subtracting the effective thickness, determined by nondestructive testing of the pavement, from the thickness required for a new pavement. Cracks in the underlying pavement will reflect through the overlay. Therefore, all joints and working cracks must be established in the overlay directly over joints and cracks in the existing pavement. For CRC pavement, this is generally not a concern. The existing pavement must be cleaned to ensure a proper bond. This technique is advised only for pavements that are in sound condition with little distress. Any areas showing deterioration must be repaired prior to the overlay.

Break and Seat for JRCP. The break and seat method for jointed reinforced concrete pavement is accomplished by breaking the long slabs into shorter slabs to distribute the expansion and contraction movement of the pavement over more cracks or joints. This reduces the strains in the asphalt overlay over the cracks or joints to the point where reflective cracking is retarded. The smaller slabs are seated in the subgrade by rolling to reduce vertical deflections. The overlay is designed as a new flexible pavement section with the broken and seated pavement as a base. The broken and seated pavement is given a structural coefficient as determined by nondestructive testing. One disadvantage of this technique is that, to fail or debond the reinforcing steel, tremendous breaking effort is required, and this results in a weak and nonuniform base. Where the reinforcing steel is not failed or debonded, large slabs continue to behave as large slabs, causing the joints to reflect through the overlay. Additionally, breaking does not correct problems at joints. Failed joints continue to be weak points in the pavement and usually heave, creating a hump in the overlay. The advantage to this technique is that broken and seated pavements tend to require thick overlays and maintain a high level of serviceability. Additionally, reflective cracking is of low severity when compared with cracking in thin asphalt overlays.

Crack and Seat for JPCP. The crack and seat method for plain concrete pavement (nonreinforced) is accomplished by producing several transverse cracks in each slab, thus transforming the long slabs into shorter slabs to distribute the expansion and contraction movement. This reduces the strains in the asphalt overlay over the joints to the point where reflective cracking is retarded, and the smaller slabs are seated in the subgrade to reduce vertical deflections. By definition, crack and seat produces a crack visible when the pavement is wetted with water. As with break and seat, the overlay is designed as a new flexible pavement section with the cracked and seated pavement as a base, and with a structural coefficient as determined by nondestructive testing. The disadvantage of this method is that the cracking does not correct problems at joints. Joints that have failed continue to be weak points in the pavement and usually heave, creating a hump in the overlay. The advantage of this method is that cracked and seated pavements with thick overlays (7 in or more) exhibit a high level of serviceability, and reflective cracking is of low severity when compared with cracking in thin asphalt overlays.

Rubblize and Roll. Rubblize and roll is applicable for all types of rigid pavement. This method is accomplished by breaking the existing pavement into 6 in (152 mm) size or less using a resonant beam breaker or multihead breaker. The rubblized concrete

www.EngineeringEBooksPdf.com

is compacted with a roller and used as a base for a new pavement. The overlay is designed as a new flexible pavement section with the rubblized and rolled pavement as a base. The rubblized pavement is given a structural coefficient based on nondestructive testing. One disadvantage of this technique is that rubblizing weakens the pavement and thereby increases the required overlay thickness. Areas with soft subgrade require removal of the pavement and undercutting; otherwise, the rubblization process cannot be achieved properly. The geometry of the equipment prohibits breaking near portable barriers used for traffic control. Another disadvantage of this technique is that, because the resulting overlay is thick, elevation transitions at bridges require pavement replacement. One advantage of this technique is the complete utilization of the existing pavement as a uniform base without discontinuities. For reinforced concrete pavement, the technique serves to completely debond the steel from the concrete.

Thick Asphalt Overlay with No Repairs. A thick asphalt overlay with no repairs is a quick and inexpensive rehabilitation strategy that can be used on any rigid pavement beyond economical repair. As the overlay thickness is increased, vertical deflection is decreased as a result of the increased structure. Horizontal movements in the slab are decreased because of lower temperature variations. This decreases the strain at the interface of the overlay and pavement, which retards reflective cracking. The overlay is designed as a new flexible pavement section with the existing pavement as a base. The existing pavement is given a structural coefficient based on deflection testing. A disadvantage of this strategy is that problems at joints are not corrected. Joints that have failed continue to be weak points in the pavement. Another disadvantage is that the thick overlay necessitates pavement replacement to make elevation transitions at bridges. The advantages of this strategy are the low initial cost and ease of construction. Reflective cracking is of low severity when compared with cracking in thin asphalt overlays.

Unbonded Concrete Overlay. The purpose of breaking the bond between the old pavement and the proposed overlay is to separate the distresses in the old pavement from the new concrete overlay. Thus, the concrete overlay can be treated as a separate pavement, and the existing distressed pavement as a uniform base. There is little benefit derived from repairing the existing pavement prior to placing the overlay, as the bondbreaker will provide uniform support and interface for the concrete overlay. The bondbreaker is placed as a thin (1- to 3-in) asphalt overlay on the existing pavement, and the concrete overlay is placed on the bondbreaker. The thickness required for the concrete overlay can be determined using the following modified version of an equation developed by the Army Corps of Engineers:

$$T = \sqrt{(\mathrm{RT})^2 - (\mathrm{ET})^2} \tag{3.8}$$

where T = the required thickness of the concrete overlay, in (mm)
RT = required thickness of new concrete pavement on the existing subgrade and for the anticipated truck loading, in (mm); the existing subgrade strength can be determined from original construction and design records or from nondestructive testing
ET = effective thickness of existing concrete pavement as determined by nondestructive testing, in (mm)

This technique is most efficient if the entire width of the roadway is available for overlay at the same time, but this makes maintenance of traffic difficult. However, the strength of the existing pavement is utilized, and the performance can be expected to be similar to that of a new pavement.

www.EngineeringEBooksPdf.com

3.9.2 Rehabilitation of Flexible Pavement

Asphalt Overlay. Without question the most common method of rehabilitation for flexible pavement is an asphalt overlay. There are many variations of this technique ranging from pavement planing and a thick asphalt overlay to a thin skin patch placed infrequently along a pavement. The existing condition of the asphalt pavement and the results of nondestructive testing dictate the most economical strategy. The pavement can be designed as a layered system.

Whitetopping. The construction of a concrete pavement on an existing asphalt pavement is termed *whitetopping*. An asphalt pavement provides an excellent base for a rigid pavement. The concrete pavement is designed as if it were a new pavement constructed on an asphalt base. The AASHTO design procedure can be used to design the concrete pavement, and the strength of existing pavement is utilized. A concrete overlay is an acceptable rehabilitation technique for flexible pavements beyond economical repair. However, construction is difficult unless lane lines are shifted permanently, and the thickness of the overlay makes elevation transitions at bridges difficult.

3.10 PAVEMENT PREVENTIVE MAINTENANCE

Preventive maintenance (PM) is a cost-effective strategy of early maintenance done to a pavement as a preemptive measure to preserve the pavement by retarding deterioration. PM is traditionally a low-cost treatment done early in a pavement's deterioration cycle. By definition, pavement preventive maintenance extends the service life and maintains or improves the functional condition of the system without substantially increasing structural capacity.

Pavement PM treatments reduce the amount of water infiltrating the pavement structure and correct surface deficiencies such as roughness and non-load-related distress. These treatments contribute little or no improvement to the pavement structure. PM should never be applied if fatigue-related distress exists in the pavement.

If applied at the proper time, pavement PM will lower the life cycle cost of any given pavement section, and when applied on a network of pavements, will improve the system condition at a lower cost. Some of the more common pavement preventive maintenance treatments are discussed in Arts. 3.10.1 to 3.10.4.

3.10.1 Crack Sealing

Crack sealing is the placement of a sealant into existing cracks of a pavement. The sealant is made of a mixture of a neat or modified asphalt cement binder, with a number of possible additives such as rubber, polyester or polypropylene fibers, or polymers. Crack sealing can be placed into routed crack reservoirs using backer rods (see Fig. 3.6) or can be placed directly over the crack using an overband technique. Crack sealing is used to minimize the intrusion of water into the pavement. By keeping water out of the pavement, erosion of the mix is kept to a minimum, deterioration of the crack is slowed, and less water is available to saturate the base materials.

There is a wide window of opportunity for cost-effective crack sealing of flexible or composite pavements. In general, cracks that display significant raveling of the crack face and secondary branch cracking (see Fig. 3.54) need more than just a crack seal and should be considered for some other type of preventive maintenance, which may include crack sealing.

www.EngineeringEBooksPdf.com

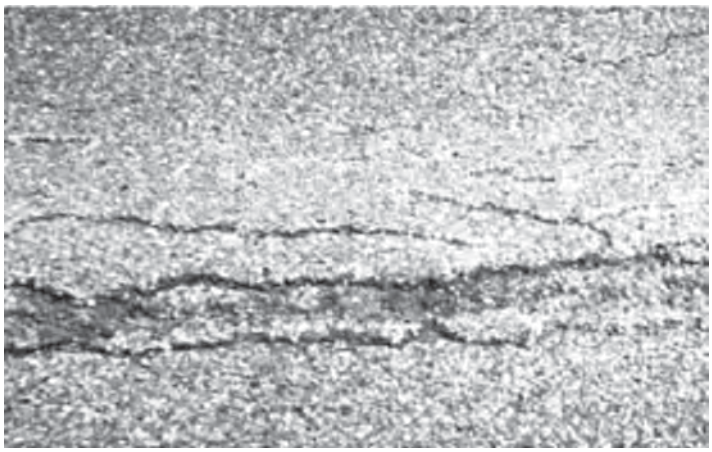

FIGURE 3.54 Secondary cracking of asphalt surface.

Rigid pavements are not expected to have cracks wider than hairline. Crack sealing hairline cracks in a rigid pavement has not been shown to be cost effective (see Fig. 3.55), and will result in a noisier and rougher riding pavement. Where cracks are found to be wider than 1/8 in (3 mm) and less than 1/4 in (6 mm), crack sealing may be beneficial; however, further investigation is recommended, as more serious problems may be present.

Best practice is to select pavements that have sufficient cracking for crack sealing mobilization to be worthwhile, yet preclude excessively cracked pavements. Furthermore, pavements that require the use of crack sealing material in excess of 5000 lb/lane mile (1400 kg/lane km) are questionable candidates for crack sealing.

FIGURE 3.55 Hairline crack in rigid pavement.

www.EngineeringEBooksPdf.com

TABLE 3.28 Rubber-Asphalt Joint Sealing Compound Quantities Needed for Different Depths and Widths of Openings

Depth, in	Pounds required per 100 lineal ft for indicated width of opening						
	¼ in	⅜ in	½ in	⅝ in	¾ in	⅞ in	1 in
¾	8.3	12.4	16.5	20.6	24.8	28.9	33.0
⅞	9.6	14.4	19.3	25.0	28.9	33.7	38.5
1	11.0	16.5	22.0	27.5	33.0	38.5	44.0
1⅛	12.4	18.6	22.8	31.0	37.2	43.3	49.5
1¼	13.8	20.7	27.5	34.4	41.3	48.1	55.0
1⅜	15.2	23.8	30.3	37.8	45.4	52.9	60.5
1½	16.5	24.8	33.0	41.3	49.5	57.8	66.0
1⅝	17.9	26.8	35.8	44.7	53.6	63.5	72.5
1¾	19.3	28.9	38.5	48.1	57.8	67.4	77.0
1⅞	20.6	30.9	41.3	52.5	61.9	73.2	82.5
2	22.0	33.0	44.0	55.0	66.0	77.0	88.0

Conversions: 1 in = 25.4 mm, 1 ft = 0.305 m, 1 lb = 0.454 kg.

Where crack sealing is not a suitable method of preventive maintenance, other forms of pavement preservation should be considered. Table 3.28 is provided for quantity estimation. The table is based on a unit material weight of 63 lb/ft^3 (1000 kg/m^3), and does not account for waste or spillage. This table is applicable for crack sealing materials meeting the requirements of ASTM D-6690.

Maintenance of traffic is required to apply the sealant and allow it to cure. Cure time is usually less than 1 h. Crack sealing operations are most effective when pavement temperatures are cool to cold. As pavements cool they contract, and thus widen the cracks, allowing more sealant to enter the pavement. Crack sealing should not be done on wet or damp pavements and should be applied on pavements when both surface temperature and ambient air temperature are above 40°F (4°C).

Crack sealing will have little effect on the current pavement condition. The intent of crack sealing is to slow the rate of deterioration and prolong pavement life. Crack sealants are expected to last 2 to 3 years before reapplication is necessary.

3.10.2 Fog Sealing

A fog seal is an application of a diluted asphalt emulsion to a weathered asphalt surface. It is used to seal and enrich the surface, seal out moisture, close up hairline cracks, and prevent oxidation and raveling. Fog seals are generally restricted to low-volume, low-speed roadways and parking lots, as they have a tendency to cause loss of friction for a short period of time after application. Fog seals should only be used on sufficiently weathered pavements that have the ability to absorb the asphalt emulsion. Fog seals should be placed on dry, clean pavements, when temperatures are warm or hot. Traffic should be kept off the fog seal until the emulsion has cured. Up to 3 h may be necessary to ensure sufficient cure. Fog seals can be expected to last as long as 3 years.

3.10.3 Chip Sealing

Chip seal is a sprayed application of a polymer-modified asphalt binder covered immediately by a washed limestone, dolomite aggregate, or trap rock and rolled with a

www.EngineeringEBooksPdf.com

pneumatic roller. The binder is applied by an approved bituminous distributor, and the aggregate placed by an approved aggregate spreader. The rolling operation is intended to seat the aggregate into the binder and ensure chip retention. Chip seals can be placed as single or double applications, depending on pavement condition. Chip seal is most generally applied to low-volume roadways, but has been applied to roadways with average daily traffic levels (ADTs) as high as 30,000. Chip seals are intended to provide a new wearing surface as well as to eliminate raveling, retard oxidation, reduce the intrusion of water, improve surface friction, and seal cracks.

Chip seals should only be applied to pavements that are structurally sound and suitable for preventive maintenance. The following conditions should be given careful consideration prior to a chip seal:

- Localized wheel track cracking should be repaired full depth.
- Any potholes must be repaired full depth.
- Areas which exhibit debonding must be patched partial depth.
- All existing patches must be in good repair prior to chip sealing.
- All existing cracks must be crack-sealed prior to chip sealing.
- Localized high-severity edge cracking must be repaired full depth (see Fig. 3.56) prior to a chip seal.
- Rutting must be no more than 1/8 in (3 mm) deep.

Traffic should be restricted and speeds reduced to minimize the loss of chips from the pavement surface. Length of time for traffic restrictions depends largely on ambient weather conditions at the time of construction of the chip seal. The construction season for this work is relatively short. Chip seals should not be placed in cool weather. It usually requires about 1 month of warm weather following construction for the aggregate

FIGURE 3.56 Localized edge cracking must be repaired full depth before chip sealing.

www.EngineeringEBooksPdf.com

particles to become reoriented and properly embedded in the asphalt membrane. The expected service life of a chip seal is 5 to 7 years.

3.10.4 Microsurfacing

Microsurfacing is the application of a thin cold-applied paving mixture composed of polymer-modified asphalt emulsion, 100 percent crushed aggregate, mineral filler, water, and other additives. A self-propelled continuous loading machine or a truck-mounted machine is used to proportion and mix the materials and apply the mixture to the pavement surface. Microsurfacing is used to retard raveling and oxidation, fill ruts, reduce the intrusion of water, improve surface friction, and remove minor surface irregularities.

The following conditions should be given careful consideration prior to microsurfacing:

- Localized wheel track cracking or edge cracking (see Figs. 3.57 and 3.58) should be repaired full depth.
- Any potholes must be repaired full depth.
- Areas which exhibit debonding must be patched.
- All existing patches must be in good repair.
- All existing cracks must be sealed.
- Crack sealing is not an acceptable treatment for cracks wider than 1 in (25 mm) as these cracks should be addressed with partial depth repairs.

Microsurfacing is suitable for all traffic levels. However, where ADT is greater than 10,000 vehicles/day, a double application of microsurfacing is required. This requirement is to ensure the wearing surface is durable throughout the intended design life.

FIGURE 3.57 Localized wheel track and edge cracking.

www.EngineeringEBooksPdf.com

FIGURE 3.58 Localized edge cracking.

3.11 LIFE CYCLE COST ANALYSIS OF PAVEMENTS

It is seldom readily apparent which is the most economical rehabilitation method for a particular pavement. Each rehabilitation strategy has unique initial construction costs, performance expectations, and future maintenance needs. What is most economical for one pavement may not be for another. Local costs may differ from one location to another, and material performance expectations may be different from region to region. The only rational way to compare one rehabilitation strategy and another is to perform an economic analysis of the alternative strategies. The method used for such a study is the life cycle cost analysis (see Chap. 10).

It is not good practice to compare a minor pavement rehabilitation strategy and a complete pavement replacement strategy. Even when comparing a new rigid pavement and a new flexible pavement, difficult choices must be made concerning the expected performance of each pavement type. Table 3.29 shows a hypothetical example of life cycle cost analysis assuming a 35-year performance period for both alternatives with no salvage values at the end of the period. It is not the intent to show that one pavement type has an economical advantage over another, as many hypothetical assumptions were made in the example. The intent is to indicate the level of information needed to make a life cycle cost analysis, and the information an analysis presents.

Probably the most important consideration in a life cycle cost analysis is the selection of the discount rate used to evaluate the time value of money. It is sometimes defined as the difference between the market interest rate and the rate of inflation. (Article 10.8.2 provides further discussion on this subject.) Because costs are incurred at different times over the life of a pavement, the discount rate is used to convert these costs occurring at different times to equivalent costs in present dollars. In the example

www.EngineeringEBooksPdf.com

TABLE 3.29 Life Cycle Cost Analysis Comparing Rigid (ALT1) and Flexible (ALT2) Pavements

Length: 3.16 mi (5.08 km)
Lane number: 5
Lane width: 12 ft (3.66 m) All sections in curb—no shoulders
Lane widths vary; average width of roadway = 60 ft (18.3 m)

Item	Dimension, in	Quantity analysis			Cost analysis		
		Unit	ALT1	ALT2	Price	ALT1	ALT2
Main lane							
AC surface course	1.25	CY		3,862	$46.00		$178,000
AC intermed. course	1.75	CY		5,407	$44.00		$238,000
Bituminous base	7	CY		21,628	$39.00		$844,000
Aggregate base	6	CY	18,539	18,539	$18.00	$334,000	$334,000
JRCP	9	SY	111,232		$22.00	$2,447,000	
Asphalt prime coat		SY		44,493	$1.50		$67,000
				Subtotal		$2,781,000	$1,661,000
Future maintenance							
10 years							
Pavement milling	1.50	SY		111,232	$1.20		$133,000
AC surface course	1.25	CY		3,862	$46.00		$178,000
AC intermed. course	1.75	CY		5,407	$44.00		$238,000
20 years							
Pavement milling	3.00	SY		111,232	$1.75		$195,000
AC surface course	1.25	CY		3,862	$46.00		$178,000
AC intermed. course	1.75	CY		5,407	$44.00		$238,000
Bituminous base	3	CY		9,269	$39.00		$362,000
Joint repair, 3%		SY	3,337		$35.00	$117,000	
Pavement sawing		LF	1,430		$1.20	$2,000	
Diamond grinding		SY	111,232		$2.00	$222,000	
Transverse joint reseal		LF	49,101		$1.50	$74,000	
Longitudinal joint reseal		LF	66,739		$1.50	$100,000	

(*Continued*)

www.EngineeringEBooksPdf.com

TABLE 3.29 Life Cycle Cost Analysis Comparing Rigid (ALT1) and Flexible (ALT2) Pavements (*Continued*)

Item	Dimension, in	Quantity analysis			Cost analysis		
		Unit	ALT1	ALT2	Price	ALT1	ALT2
		Future maintenance (*cont.*)					
30 years							
Pavement milling	1.50	SY		111,232	$1.20		$133,000
AC surface course	1.25	CY	3,862	3,862	$46.00		$178,000
AC intermed. course	1.75	CY	5,407	5,407	$44.00		$238,000
					Subtotal	$515,000	$2,071,000
					Grand total	$3,296,000	$3,732,000

Conversions: 1 in = 25.4 mm, 1 yd^2 = 8.36 m^2, 1 yd^3 = 0.765 m^3.

AC = asphalt concrete; JRCP = jointed reinforced concrete pavement; CY = cubic yards; SY = square yards; LF = linear feet.

www.EngineeringEBooksPdf.com

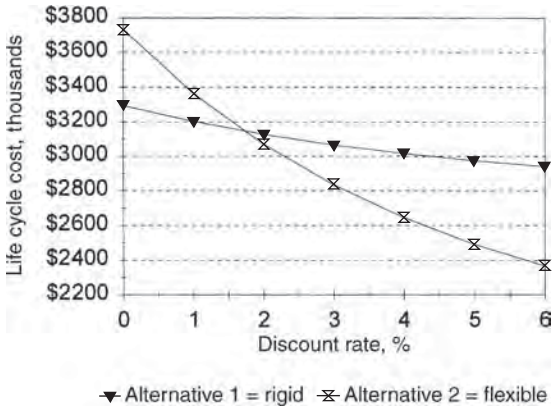

FIGURE 3.59 Sensitivity analysis showing effect of discount rate selection on life cycle cost of pavement alternatives.

shown in Table 3.29, the discount rate was unrealistically assumed as zero. Figure 3.59 shows the effect of discount rates from 0 to 6 percent. As is typically the case, the analysis is very sensitive to the discount rate. In this example, the rigid pavement provides the lower life cycle cost when the discount rate is less than about 1.7 percent, and the flexible pavement when the rate is higher. It is apparent that the discount rate must be selected with great care.

3.12 REFERENCE MATERIAL

The following reference sources were helpful in developing this chapter.

AASHTO, *Guide for Design of Pavement Structures,* Vol. 2, Washington, D.C., 1986, App. EE.

AASHTO, *Guide for Design of Pavement Structures,* Washington, D.C., 1993.

"AASHTO Design Procedures for New Pavements," FHWA Report HI-94-023, National Highway Information, ERES Consultants, Inc., Washington, D.C., February 1994.

ASTM D-4748, *Standard Test Method for Determining the Thickness of Bound Pavement Layers Using Short-Pulse Radar,* ASTM International, West Conshohocken, Pa., 2002.

ASTM D-6690, *Standard Specification for Joint and Crack Sealants, Hot Applied, for Concrete and Asphalt Pavements,* ASTM International, West Conshohocken, Pa., 2002.

FHWA Technical Advisory T 5040.30, "Concrete Pavement Joints," November 30, 1990.

FHWA Technical Paper 89-04, "Preformed Compression Seals for PPC Pavement Joints," Washington, D.C., September 11, 1989.

FHWA Highway Subdrainage Design Manual, FHWA Report No. TS-80-224, Washington, D.C., August 1980.

Implementation and Revision of Developed Concepts for ODOT Pavement Management Program, Vol. II, *Pavement Conditions Rating Manual*, Resource International, Inc., Engineering Consultants, Columbus, Ohio, February 1987.

Ohio Department of Transportation, *Location and Design Manual,* Vol. 1, *Roadway Design,* Columbus, Ohio.

"Pavement Deflection Analysis," FHWA Report HI-94-021, National Highway Information, Washington, D.C., February 1994.

www.EngineeringEBooksPdf.com

"Pavement Design for Federal, State and Local Engineers," U.S. Department of Transportation, FHWA, National Highway Information, Contract No. DOTFH 61-86-C-00038, Washington, D.C., 1986.

"Pavement Design: Principles and Practices," FHWA, National Highway Information, ERES Consultants, Inc., Washington, D.C., September 1987.

Pavement Technology Advisory 97-7, "Dynamic Cone Penetrometer," Illinois Department of Transportation, Bureau of Materials and Physical Research, Springfield, Illinois, 1997.

"SHRP Distress Identification Manual for the Long Term Pavement Performance Project," SHRP-P-338, Strategic Highway Research Program, Washington, D.C., May 1993.

"SHRP-LTPP Interim Guide for Laboratory Material Handling and Testing," NRC Operational Guide No. SHRP-LTPP-OG-004, Strategic Highway Research Program, Washington, D.C., July 1993.

R. F. Carmichael III and E. Stuart, "Predicting Resilient Modulus: A Study to Determine the Mechanical Properties of Subgrade Soils," Transportation Research Record 1043, Transportation Research Board, National Research Council, Washington, D.C., 1985.

K. Majidzadeh and V. Kumar, *Manual of Operation and Use of Dynaflect for Pavement Evaluation,* Resource International, Inc., Columbus, Ohio, Report No. FHWA/OH-83/004, October 1983.

S. Nazarian, D. Yuan, and M. R. Baker, *Rapid Determination of Moduli with Spectral-Analysis-of-Surface-Waves Method,* The University of Texas at El Paso, El Paso, Texas, Report No. TX-94 1243-1, November 1995.

www.EngineeringEBooksPdf.com

CHAPTER 4
BRIDGE ENGINEERING

Walter J. Jestings, P.E.
Formerly, Bridge Engineer
Parsons Brinckerhoff, Quade & Douglas, Inc.
Atlanta, Georgia

Mahir Sen, P.E.
Professional Associate
PB Americas, Inc.
Newark, New Jersey

This chapter is directed at practical issues of importance in the design and rehabilitation of traditional bridge types for short and medium spans. Subjects addressed include characteristics of various bridge types, considerations in their selection, and suggestions for economical design; materials for bridges and bridge decks; bridge deck design, construction, and maintenance; deflection and expansion joints; and bridge bearings. The issues are addressed from a general viewpoint, with the emphasis on what is generally done and why. Detailed design methods are available in other publications. (See R. L. Brockenbrough and F. S. Merritt, *Structural Steel Designer's Handbook,* McGraw-Hill, and E. H. Gaylord and C. N. Gaylord, *Structural Engineering Handbook,* McGraw-Hill.)

4.1 CLIENT-CONSULTANT RELATIONSHIP

State departments of transportation, bridge and turnpike authorities, and other agencies often require the services of a consulting engineering firm. This may be because the agency chooses not to maintain an engineering staff of its own, because its workload is greater than its staff can handle, or because expertise in special kinds of bridges is needed. Consultants can fill these needs.

Where only routine types of bridges are involved and the agency has an engineering staff, the best that a consultant can be expected to do, usually, is only as good a job as the agency's engineers can do. The agency's staff may include veteran engineers who have become extremely proficient in design of routine and not so routine bridges, and who also know exactly how to prepare plans in the proper format and sheet sequence preferred by the agency, as well as how to use exact pay item

www.EngineeringEBooksPdf.com

descriptions and to refer to pertinent proposal notes and special provisions. A consultant, in this instance, is like a temporary employee who knows the basics but needs to be trained in local procedures.

When a consultant serves a client for many years, however, that consultant can become as proficient as the agency's staff. Long-term contracts for continuing or on-call services eliminate the need to train a new consultant. However, they can be seen as showing favoritism in an environment where other consultants expect an opportunity to compete for contracts. For this reason, and because a long-term contract may allow a consultant to become complacent, the client may limit the term of the contract and, upon expiration, issue a request for proposals (RFP) to perform the services. The original contract holder may or may not be eligible to respond to this RFP, at the agency's discretion.

In other instances, agencies may hire consultants as program managers. In these cases, the consultant manages designated design and construction contracts for the agency, providing administration, technical review, and construction inspection services.

Consultant's Responsibilities. To serve the client in a professional and efficient manner, the consultant should

- Deliver the product promised in the contract scope of services
- Deliver the product on time
- Conform to accepted codes and standards
- Develop economical designs
- Use time-tested materials, avoiding purely experimental materials and systems
- Confirm in writing to the client any verbal understandings
- Keep the client informed of project status
- Avoid issues that could involve the client in litigation
- Not make statements to the public or to the media without the client's knowledge and authorization

Client's Responsibilities. Just as the consultant has a responsibility to the client, the client has a responsibility to the consultant. Responsibilities include

- Executing a contract with the consultant that includes adequate hours to perform the work, recognizing any unique requirements, and not applying standard allowances for nonstandard work.
- Performing reviews in a timely manner.
- Performing reviews either concurrently or sequentially, but not expecting the consultant to make changes required by one branch of the client's office only to be subsequently countermanded by another branch. In other words, the client should transmit consolidated review comments.
- Not interrupting the work unless absolutely necessary.
- Paying invoices in a timely manner. Contracts with subconsultants often stipulate that the subconsultant's invoices will not be paid until payment is received from the prime consultant's client, so a delay in payment from the client results in delay of payment to the subconsultant.
- Being frank with the consultant about any dissatisfaction the client may have with the consultant's performance so that corrective action can be taken immediately.

If the client and consultant meet their respective responsibilities, the relationship will be a partnership that benefits both parties.

www.EngineeringEBooksPdf.com

4.2 AESTHETIC CONSIDERATIONS

While highway bridges are utilitarian structures, they are visible to the public and therefore should be pleasing to the eye. At the outset of design, one should be conscious of the aesthetic qualities of the structure, lest one end the project saying (after Shelley), "Look on my works, ye Mighty, and despair!"

Some basic guidelines that were adopted by the Ohio Department of Transportation (DOT), Bureau of Bridges and Structural Design, and are included in its *Bridge Design Manual* illustrate the commonsense approach that can be taken to apply this consciousness:

> Aesthetics. Each structure should be evaluated for aesthetics. Normally it is not practical to provide cost premium aesthetic treatments without a specific demand; however, careful attention to the details of the structure lines and forms will generally result in a pleasing structure appearance.
>
> Aesthetic bridge guidelines containing useful and practical information on how aesthetic quality can be recognized and incorporated in bridge design at minimal cost are as follows:
>
> ***a.*** Avoid mixing structural elements, for example concrete slab and steel beam superstructures or cap and column piers with wall type piers.
> ***b.*** In general, continuous superstructures shall be provided for multiple span bridges. Where intermediate joints cannot be avoided, the depth of spans adjacent to the joints preferably should be the same. Avoid the use of very slender superstructures over massive piers.
> ***c.*** Abrupt changes in beam depth should be avoided where possible. Whenever sudden changes in the depth of the beams in adjacent spans are required, care should be taken in the development of details at the pier.
> ***d.*** The lines of the structure should be simple and without excessive curves and abrupt changes.
> ***e.*** All structures should blend in with their surroundings.
>
> One of the most significant design factors contributing to the aesthetic quality of the structure is unity, consistency, or continuity. These qualities will give the structure an appearance of a design process that was carefully thought out.
>
> The aesthetics of the structure can generally be accomplished within the guidelines of design requiring only minimum special designs and minor project cost increase. As special situations arise preliminary concepts and details should be developed and coordinated with the Bureau of Bridges and Structural Design.

Some states have adopted, in principle if not in writing, a similar philosophy in regard to aesthetics of their bridges. California, for example, is known and admired for applying some degree of architectural attention to all of its bridges. Some agencies, however, seem to neglect aesthetics, particularly in regard to the very visible piers of grade-separation bridges. Here the primary objectives seem to be standardization of shape to facilitate computer design, and emphasis on straight, flat lines to obtain minimum cost of forming. These objectives are achieved at a price—ungraceful substructures not in keeping with the lines of the superstructure.

4.3 BRIDGE DESIGN SPECIFICATIONS

AASHTO Specifications. For many years, the basic manual for design of highway bridges has been the *Standard Specifications for Highway Bridges* adopted by the American Association of State Highway and Transportation Officials (AASHTO). These specifications permit use of either allowable stress design or load factor design. In 1994, however, AASHTO published a completely new alternative volume, *LRFD Bridge Design Specifications*. It was subsequently updated with a second edition in

www.EngineeringEBooksPdf.com

1998; third edition in 2004; fourth edition in 2007; and annual *Interim Specifications* thereafter. Based on the *load and resistance factor design method,* the *LRFD Specifications* represent a major step in improved bridge design and analysis methods. It is anticipated that usage of the new specifications will lead to bridges with improved serviceability, enhanced long-term maintainability, and more uniform levels of safety. The initial volume resulted from a 5-year research effort conducted under AASHTO's National Cooperative Highway Research Program. Independent consultants, technical representatives from various industries, AASHTO members, and other engineers participated in the effort to develop a draft document. Then the provisions were tested in trial designs at 14 AASHTO member departments before final specifications were adopted. One of the most useful feature included is a detailed commentary that explains the specification provisions and gives references for further study.

The use of the new specifications has been increasing throughout the country. The Federal Highway Administration (FHWA) and AASHTO have established a goal that the LRFD *Specifications* be used for all new bridges designed after 2007 and for all culverts, retaining walls, and other standard structures after 2010. Most state DOTs have adopted LRFD specifications for the design of their bridges so as not to lose funding for federally funded bridge projects. States unable to meet these dates were required to provide justification and a schedule for completing the transition to LRFD. The *Standard Specifications* would be applicable only to structures designed prior to 2007, and could be used for the maintenance and rehabilitation of existing bridges. No technical revisions will likely be made to the *Standard Specifications* in the future as its usage is phased out.

AASHTO specifications are developed under the direction of the AASHTO Highway Subcommittee on Bridges and Structures. This subcommittee consists of all bridge engineers of states of the United States and of Canadian provinces and officials of selected turnpike and bridge authorities. The specification development process is a deliberate one. Nevertheless, changes are made on a regular basis (some would say too frequently for the average bridge designer to stay abreast of them). Between new editions, revisions are published under the title of *Interim Specifications.* When identifying the AASHTO specifications used for design on plans, some states refer to "AASHTO *Standard Specifications for Highway Bridges,* Current Edition." A better practice is to refer to the specific edition, by number and year, along with any interims that were in effect at the time of design.

Unless there is a cogent reason for not meeting the minimum requirements of the AASHTO specifications, engineers designing bridges where they are in effect should apply and conform to them. Any exceptions should be noted on the plans. In case of litigation, one would have to explain why these recognized standards were not met.

Other AASHTO Publications. AASHTO offers numerous publications related to bridges and structures. A bridge designer should be aware of the availability of these publications and should use them where applicable.

In this chapter, references to the "AASHTO *Specifications*" or "AASHTO" will be to the AASHTO *Standard Specifications for Highway Bridges* unless otherwise noted.

Bridge Design Manuals. Many state departments of transportation publish bridge design manuals, which they develop for guidance of their own staff and consultants. States that do not have manuals often publish design memoranda. Before starting a bridge design project, a consultant should determine which of these aids are available, acquire and become familiar with them, and apply them in designing and preparing plans. Some state bridge design manuals are quite explicit, and are almost textbooks on bridge design.

4.4 BRIDGE GEOMETRICS

Bridge Width. Roadway width on bridges is the inside measurement to the bottom of the sidewalk curb or the bottom of the safety barrier. For bridges on roads where

www.EngineeringEBooksPdf.com

sidewalks are not provided, the bridge width is made equal to the approach roadway width including shoulders, so that the bottom of the barrier curb or the near face of the railing is aligned with the face of the barrier rail at the outside edge of the shoulder.

In the past, policy did not always permit full shoulders to be accommodated on bridges. Often the roadway was made narrower, particularly on longer bridges. This was done strictly to reduce bridge cost. From the traffic operations standpoint, however, it was an unwise practice. Disabled vehicles could not find refuge on the shoulder, and a full shoulder was not available for temporary maintenance of traffic during road rehabilitation or repaving. It is now recognized that a bridge is an integral part of a highway system when it comes to roadway width. The FHWA requires a minimum shoulder width of 8 ft (2.4 m) on each side of the roadway on federally funded projects.

Bridge Horizontal Clearance. For bridges over streams, the location of substructure units, and therefore the length of spans, is controlled by hydraulic requirements and by navigation clearance requirements established by agencies such as the U.S. Coast Guard and the U.S. Army Corps of Engineers. For bridges over navigable waters, the bridge designer should also consider the possibility of collisions from vessels. Refer to AASHTO's *Guide Specifications and Commentary for Vessel Collision Design of Highway Bridges*.

For crossings of highways, the bridge columns or pier walls should clear the traveled way, shoulders, ditches where required, barrier rail, and any additional width required to provide a safe clear zone from edge of pavement. A minimum clearance of 30 ft (9.1 m) from edge of pavement is required except where this clearance is impractical, in which case the pier or wall may be placed closer to the edge of pavement, with barrier rail 2'-0" (610 mm) minimum from edge of shoulder, and pier or wall 2'-0" (610 mm) minimum from face of barrier rail. The barrier rail offset from face of pier or wall will be further controlled by the dynamic deflection of the particular system used. (See Chap. 6 for additional information.)

For crossings over railroads, the horizontal clearance requirements are usually set by the railroad company or by the state public utilities commission. In addition to clearance for safe operation of trains, including allowance for accidentally overhanging cargo, railroad companies are cognizant of the importance of trackside drainage and require that drainage ditches be accommodated where present. In addition, a maintenance roadway for off-track equipment is often required. A horizontal clearance of 25 ft (7.6 m) from the centerline of the track is desirable and will obviate the need for pier crash walls.

If a pier adjacent to a railroad track is located closer than what is considered to be an adequate distance to prevent derailed cars from striking the pier (generally 25 ft (7.6 mm) from centerline of railroad track), the pier is required to be of heavy construction, or a substantial crash wall is required to be constructed to protect the pier and prevent catastrophic collapse of the bridge. This wall should be aligned with the pier. For additional details, refer to the American Railway Engineering and Maintenance-of-Way Association (AREMA) *Manual for Railroad Engineering.*

AASHTO LRFD *Specifications* require abutments and piers located closer than 30 ft (9.1 m) to the edge of the roadway or closer than 50 ft (15 m) to the centerline of a railway track to be designed for a vehicular collision load defined in the specifications, unless protected by an embankment or a structurally independent, crashworthy, ground-mounted barrier.

Bridge Vertical Clearance. Generally, a clearance of 16 ft (4.9 m) plus an allowance for resurfacing should be provided over major state, U.S., and interstate highways, over the entire width of roadway. Over less important highways, a clearance of 14 ft (4.3 m) should be provided. These are AASHTO requirements. Published state standards, if different from AASHTO, should be followed.

The above vertical clearances apply to vehicular bridges. Because pedestrian bridges are narrower and lighter in weight, and therefore more vulnerable to major damage or

www.EngineeringEBooksPdf.com

collapse in the event of collision from overheight vehicles passing under the bridge, states are beginning to require an additional clearance of 1 ft (300 mm) for pedestrian bridges. This additional clearance is also recommended for overhead sign structures.

Vertical clearance requirements over railroads, like horizontal clearances, are set by the railroad company or state public utilities commission. A minimum clearance of 23 ft (7.0 m) above high rail is common for new bridges over nonelectrified racks. If the tracks are electrified, an additional 1-ft (300-mm) minimum clearance is required for catenary wires. Widened or rehabilitated bridges will generally be allowed to maintain the existing clearance, but no less.

Vertical clearance requirements over navigable waterways are subject to bridge permits by U.S. Coast Guard (USCG). USCG has established guide clearances for particular waterways. They are not regulatory in nature and greater or lesser clearances meeting reasonable needs of navigation for a particular location may be required or approved by USCG.

4.5 BASIC BRIDGE MATERIALS

The basic materials most often used to construct bridges are concrete and steel. Timber is occasionally used for deck construction and sometimes for short-span bridges.

4.5.1 Concrete

High strength is desirable for bridge concrete to reduce member size and weight, but durability is equally or more important. Component materials must be compatible with each other, and the concrete must have low permeability.

A long-term destroyer of concrete from within is alkali-silica reaction. While material specifications for concrete have been developed to preclude use of cement and aggregates that will produce alkali-silica reaction, the best prevention of this problem is the use of cements and aggregates from sources that have a known history of absence of this problem.

Given that required strength can be obtained by mix design with relative ease, low permeability becomes one of the most desirable properties, because bridge concrete is reinforced or prestressed and prevention of corrosion of the embedded steel is essential for long-term durability. Reduced permeability will also reduce carbonation, alkali-silica reaction, and freeze-thaw damage. Permeability can be reduced by proper mix design, by maintenance of a low water/cement ratio during concrete placement, by use of admixtures, by compactive effort, by use of specialty concretes, or by application of concrete sealers or coatings. Often a combination of these procedures is employed.

Another desirable quality for the prevention of reinforcing steel corrosion, along with low permeability, is resistance to cracking. The cracking of bridge decks and of bridge deck overlays has been a persistent problem. The use of shrinkage-compensating concrete using type K cement has been found to be effective in reduction of cracking, and some agencies mandate its use in construction of bridge decks. One property of shrinkage-compensating concrete that is different from regular concrete is the need for adequate amounts of mix water to cause the chemical reaction necessary for the development of the expansion. The normal rules of low water-cement ratio do not apply and must not be enforced. Another difference is that bleed water cannot be expected to appear. Waiting for bleed water to appear will result in the start of concrete hardening, making finishing very difficult. Agencies that have adopted shrinkage-compensating concrete have also adopted strict specifications for the production, placement, and curing of the concrete.

www.EngineeringEBooksPdf.com

These specifications address the requirements peculiar to shrinkage-compensating concrete, but also include many requirements that are applicable to normal concrete as well. Perhaps the most important requirement is that prior to placement of the deck concrete, a preconstruction meeting be held, and that *all* participants in the cement manufacturing and concrete mixing, delivery, placement, finishing, curing, and inspection be *required* to take part. This meeting gives the type K cement manufacturer the opportunity to instruct the other participants in special requirements, and to correct any misconceptions that exist. Such meetings in themselves go a long way toward improving the quality of the concrete.

Admixtures. Various admixtures are available to enhance the properties of concrete made with the basic ingredients: coarse aggregate, fine aggregate, portland cement, and water. Admixtures may be classified as *chemical admixtures* such as air-entraining, water-reducing, set-retarding, accelerating, or superplasticizer; and *mineral admixtures* such as fly ash, silica fume, or slags. Mineral admixtures are usually added to concrete to improve workability, and resistance to thermal cracking and sulfate attack; and to reduce cement content whereas the chemical admixtures are added for entrainment of air, reduction of water or cement content, plasticization of the mixture, or control of setting time.

Air-entraining admixtures produce a distribution of bubbles that become permanent tiny voids in the concrete. This system of voids makes the concrete resistant to scaling, a surface failure that became frequent when deicing salts came into use. Air entrainment has virtually eliminated scaling. The use of air entrainment is recommended even with high-strength concrete.

Water-reducing admixtures make concrete mixtures workable at a lower water/cement ratio than is possible with use of "water of convenience" (water in excess of that required for hydration of the cement) alone. High-range water reducers provide great workability at very low water/cement ratios, and have been developed to provide reasonable control of duration of extra fluidity.

Dense concrete is a concrete developed by the Iowa Department of Transportation for overlayment of new and existing concrete bridge decks. It has a low water/cement ratio and relies on special compactive effort imparted by vibrating screeds to produce a dense concrete with reduced permeability.

Latex-modified concrete uses an admixture of latex, generally liquid styrene butadiene with a minimum solids content of 40 percent. It achieves a reduced permeability equivalent to dense concrete at a lesser thickness. This quality is important to the viability of latex-modified concrete as an alternative option to dense concrete because the cost of latex-modified concrete is higher on a volume unit measure basis.

Silica fume concrete, or microsilica concrete, incorporates extremely fine particles of microsilica. Added to concrete in powder or liquid form, it densifies the concrete, increases strength, and reduces permeability. Where silica fume concrete has been allowed as a contractor's alternative option to latex-modified or dense concrete, it has rapidly replaced these other specialty concretes.

Calcium nitrite concrete contains calcium nitrite, a widely used inorganic corrosion inhibitor that acts at the surface of the steel reinforcement to limit the electrochemical reaction involved in the corrosion process. The calcium nitrite is added in liquid form to the concrete at a rate of 3 to 5 gal/yd^3 (15 to 25 L/m^3), depending on the quality of the concrete, the level of chlorides expected, and the life required for the concrete. (See *Manual for Corrosion Protection of Concrete Components in Bridges,* Task Force 32 Report, February 19, 1992, AASHTO, Washington, D.C.)

High-Performance Concrete. High-performance concrete (HPC) is defined as concrete that meets special combinations of performance and uniformity requirements that

www.EngineeringEBooksPdf.com

cannot be achieved routinely using conventional ingredients, normal mixing and placing procedures, and typical curing practices. HPC offers many strength-related improvements such as higher compressive strength and modulus of elasticity, and lower creep and shrinkage. It also offers ductility-related improvements such as increased resistance to freeze-thaw, abrasion, and scaling, as well as reduced permeability. Potential benefits to owners include lower initial and life cycle costs as a result of lower construction costs, less required maintenance, longer structure life, and elimination of additional protective systems. Also, there should be less disruption to the public due to the decreased maintenance requirements and longer periods between major rehabilitations.

HPC qualifies for the special federal funding allocated by the U.S. Congress (fiscal 1998 to 2003) for repair, rehabilitation, replacement, and new construction of bridges or structures that demonstrate the application of innovative materials. Missouri, Nebraska, New Hampshire, Texas, Virginia, and Washington are included in the AASHTO Strategic Highway Research Program (SHRP) lead state team for HPC implementation. HPC program bridges have already been constructed in several states including Texas, Nebraska, Virginia, Washington, New Hampshire, and Colorado. HPC bridge decks have been designed and either built or scheduled to be constructed in Ohio, New Jersey, and Puerto Rico.

HPC mixes must use pozzolan materials such as silica fines and fly ash. Pozzolans make concrete denser, thereby increasing durability. Silica fines eliminate the detrimental effects of fly ash on concrete mechanical properties. Fly ash reduces the heat of hydration and thereby reduces plastic shrinkage. Mix design requirements vary, depending upon the application. For bridge decks, states have specified a 28-day compressive strength from 4000 to 8000 lb/in^2 (27.6 to 55.2 MPa), and from less than 750 up to 2000°C for chloride permeability. For prestressed concrete beams, states have specified a 28-day compressive strength from 6000 to 10,000 lb/in^2 (41.4 to 69 MPa), and from less than 1000 up to 2000°C for chloride permeability. The minimum specified for silica fines has ranged from 5 to 10 percent. Curing requirements have included a wet burlap covering within 10 min of finishing, and a 7-day wet cure followed by application of a curing compound.

HPC specifications typically also include production, placement, and curing trials. Testing programs include evaluations of strength, permeability, scaling, freeze-thaw, abrasion, elasticity, creep, and shrinkage. Not all tests are required for each application, but because many of the tests are of long duration, mix design may take 6 months or more.

Lightweight Concrete. Although the concrete most often used in bridge construction is normal-weight (hardrock) concrete having a unit weight, reinforced, of 150 lb/ft^3 (24 kN/m^3), lightweight concrete can be produced from manufactured aggregate that is available from several sources around the United States. The coarse aggregate is produced by heating shale in a kiln, which expands it. Lightweight fine aggregate can also be produced but is not recommended for bridge concrete. Use of lightweight coarse aggregate can reduce the weight of reinforced concrete to 115 lb/ft^3 (18 kN/m^3). While the history of lightweight concrete for bridges includes premature failures, it also includes successful applications in both deck slabs and beams. It is important to recognize the different (greater) creep characteristics of lightweight concrete in structures where long-term deflections are a significant design factor.

4.5.2 Structural Steel

Steel for bridges is available in several different strength levels, each of which may be specified under ASTM A709, *Standard Specification for Structural Steel for Bridges*.

www.EngineeringEBooksPdf.com

TABLE 4.1 Steels for Bridges

Type of steel	ASTM designations: Bridge specification*	ASTM designations: Structural steel specification	AASHTO designations
Structural carbon	A709 grade 36	A36	M270 grade 36
High-strength, low-alloy	A709 grade 50	A572 grade 50	M270 grade 50
High-strength, low-alloy	A709 grade 50W	A588	M270 grade 50W
Quenched and tempered high-strength, low-alloy	A709 grade 70W	A852	M270 grade 70W
Quenched and tempered, high-strength alloy	A709 grade 100/ A709 grade 100W	A514	M270 grade 100/ M270 grade 100W
Control rolled	A709 grade HPS-50W		
Quenched and tempered, control rolled, interrupted accelerated cooled	A709 grade HPS-70W		M270 grade HPS-70W
Quenched and tempered	A709 grade HPS-100W		

*When the supplementary requirements of A709 are specified, the steel exceeds the requirements of the listed structural steel specification. The supplementary requirements include toughness testing, grain size, and frequency of tension tests.

The grade designations are indicated in Table 4.1, as well as some alternative specifications that may be more familiar. The grade designation indicates the specified minimum yield stress in kips per square inch, and a "W" indicates that it is a weathering steel composition. ASTM A709 contains supplementary requirements for notch toughness and other items that are available but apply only when specified by the purchaser. When such supplementary requirements are specified, they exceed the requirements of the basic specifications such as A36 or A572.

The HPS designations indicate that the materials are high-performance steels. They are so designated because they possess superior weldability and toughness compared to conventional steels of similar strength. Grades 36, 50, and 50W are available either as structural shapes or as plates. The other grades are available only as plates. Grades 36, 50, and 50W are the most frequently used materials. In general, compared with A36 steel, where other limitations such as deflection or stiffness do not override, the extra unit cost of the higher-strength grades (50 or 50W) is more than offset by the higher-yield strength. Grades 70W and 100/100W have proven economical in longer-span structures, or the higher-stressed portions of medium-span structures. The AASHTO publication *Guide Specification for Highway Bridge Fabrication with HPS-70W Steel* suggests that economies can be achieved by combining the use of HPS-70W and Grade 50W steels in a structure. In a 181-ft (55-m) span bridge for the New York State Thruway Authority, the use of HPS-70W steel reduced the number of girders in the cross section from five to four, enabling a savings of 28 percent in weight and 18 percent in cost.

Weathering grades (50W, 70W, and 100W) have chemical compositions that provide enhanced resistance to atmospheric corrosion. They can be used in the bare (unpainted) condition for bridges in many cases (see Art. 4.13). The savings on cost of painting and repainting frequently makes them an economical choice.

Although prices vary widely due to demand and availability, in reference to the unit price of grade 36 steel, the relative material price of the other steels in plate grades is approximately as follows:

www.EngineeringEBooksPdf.com

Grade	Price relative to A36
36	1.00
50	1.12
50W	1.23
70W	1.52
100W	2.07

As indicated, these are only price factors and do not consider the reduced quantity of steel that may be required as the yield strength increases. For structural shapes, grade 50 steel can usually be obtained for about the same price as grade 36 steel, but there would usually be some additional cost for grade 50W.

The cost of fabrication and erection for members of grade 36 and grade 50 or 50W steel is approximately the same. Thus, in preliminary cost studies, only the cost of the mill material for the members selected need be compared. Fabrication costs for grade 70W, grade 100, and grade 100W tend to be higher than those of the as-rolled products, and thus, the cost comparisons must include those costs.

Steels with greater strength than grade 36 tend to be economical for beams and girders in many cases, and are particularly attractive under the following conditions:

- When dead load is a major part of total load
- When deflection limits do not control
- When deflections can be reduced (composite design, continuous structure, etc.)
- When weight reduction cuts cost of foundations, shipping, etc.
- When selection avoids use of built-up members (cover plates, fabricated girder versus rolled beam, etc.)

The higher-strength steels often show advantage for tension members of trusses because the higher strength is used more effectively (for the entire depth of the member, because there is no stress gradient). The same is true for compression members of trusses where the member slenderness ratio is small to moderate (ratio of length to radius of gyration of about 80 or less, depending on grade).

4.5.3 Other Materials

Aluminum. A few bridges, including highway plate girder bridges and arch-type pedestrian bridges, have been constructed of aluminum. These bridges have generally performed well and have not required much maintenance. The plate girder bridges do not seem to have experienced problems that one might anticipate due to the difference in thermal coefficient between the aluminum girders and the concrete deck. The main reason aluminum bridges have not captured a larger share of the market is high cost. Design specifications for aluminum bridges may be found in *Guide Specifications for Aluminum Highway Bridges,* AASHTO, 1991.

Aluminum railings, while not having the strength or ductility of steel, do not require maintenance painting. Aluminum posts are cast, and aluminum rail elements are extruded in shapes that are convenient for bolted assembly of the railing. Bolts to anchor aluminum railings in concrete parapets are generally stainless steel.

Rubber. Rubber, sometimes natural but more often synthetic, is used in bridge bearings and expansion joint sealing devices. Reinforced rubber sheets are used to fabricate troughs to conduct storm water that is permitted to flow through open expansion joints.

www.EngineeringEBooksPdf.com

Stone. Stone is used in some states to face barriers and to provide waterline protection of piers. It is sometimes also used for aesthetic reasons.

4.6 BRIDGE DECK MATERIALS AND SYSTEMS

Bridge decks can be constructed of timber, concrete, or steel.

Timber Decks. For bridges on unpaved roads or low-volume roads in rural environments, timber decks of modern construction, such as Glulam (glued laminated) decks, can be serviceable and durable. For high-traffic-volume highways, timber is at a great disadvantage because of high cost, difficulty of fitting to a variable support profile, lack of skid resistance if a separate wearing surface is not provided, and difficulty in maintaining adhesion of an asphalt wearing surface. The choice then is usually between concrete and steel, or a combination of both.

Cast-in-Place Concrete Decks. Where light weight or speed of construction is not prerequisite, cast-in-place concrete decks prevail because they easily conform to the top of the supporting superstructure and required surface profile. Cast-in-place concrete decks also easily accommodate concrete sidewalks, median barriers, and outside safety barriers.

The durability of concrete decks became a matter of great concern after the use of roadway deicing salts became prevalent and decks began to develop spalls at an early age. Extensive investigation and development have resulted in adoption of improved design and construction requirements that show promise of extending deck life by preventing premature corrosion of reinforcing steel. Life-extending measures include greater design cover over the top reinforcing bars, tighter control of actual construction tolerances, use of lower water-cement ratio concrete, use of admixtures and special concretes such as silica fume concrete to reduce permeability, use of HPC, imposition of stricter curing requirements, use of epoxy-coated or galvanized reinforcing bars, application of various types of waterproofing surface sealants, installation of membranes or protective overlays, and installation of cathodic protection.

Cast-in-Place Concrete Decks Composite with Precast Formwork. This type of concrete deck is constructed using half-depth, precast, prestressed panels as forms on which the remaining half-depth is cast-in-place. This type of construction, which eliminates traditional formwork, is used by some states for both bridge decks and box culverts. The prestressed concrete panels are a minimum of $3^1/_2$ in (89 mm) thick, with greater thicknesses required for some beam spacings. The transverse prestressing strands are usually 3/8, 7/16, or 1/2 in (9.5, 11, or 13 mm) in diameter. Longitudinal reinforcement is usually No. 3 bars or equivalent welded wire fabric. The panels are designed to support the dead load of the panel, the weight of the subsequently cast portion of the deck, and any specified construction loads. In addition, the resulting full-depth composite section is designed to support the design highway live loads and any other dead loads, such as overlays.

Precast Concrete Deck Units. For rehabilitation of existing bridges requiring deck replacement, the use of precast prestressed-concrete deck units placed transversely across existing beams permits deck replacement at night or during other hours of reduced traffic volume. Only as much of the existing deck slab as can be replaced in a work shift is removed, and the gap between the remaining slab and the new deck units is minimized so that it can be bridged by a steel plate to maintain traffic. The deck units can be fastened by welding studs to the

www.EngineeringEBooksPdf.com

beams through formed holes in the deck unit, and by filling the holes with a fast-setting concrete. Adjusting devices can be built into the deck units to control the deck profile. Longitudinal posttensioning can be used to ensure a tight deck at the grouted joints. The deck units can cantilever beyond the outside beams and have provision for barrier placement.

Composite Precast Concrete Deck Systems. A significant improvement over conventional composite construction is achieved using an upside down casting technique to create a composite superstructure composed of steel beams and a concrete deck. Also known by its commercial name, Inverset™, it results in a reduced superstructure depth because steel beams and concrete deck act as a composite unit to resist all dead loads. Units can be cast in lengths from 20 to 160 ft (6 to 49 m), depending on the capacity of the manufacturer, and utilized as span units longitudinally between abutments and piers or transversely between girders as decking. Similar to precast concrete deck, these units allow faster installation, which makes overnight deck replacements or over-the-weekend bridge replacements possible. Other benefits include minimal cracking and greater durability due to built-in prestressing, easy handling, and year-around installation. Closure pours in joints in between units, and longitudinal or transverse posttensioning would provide an integral deck system.

Steel Decks. Sometimes the weight of the deck needs to be minimized. This is true when replacing or widening the deck on an existing superstructure or substructure of limited strength. It is also important on movable bridge spans where every pound reduced in the movable span is accompanied by a similar reduction of counterweight. In these cases, steel decks can effectively reduce weight. The lightest-weight decks have been open steel-grid decks, but these decks often have an unpleasant riding quality when new, and can become slippery and unsafe with wear. Skid resistance can be restored by grinding grooves on the riding surface, which weakens the grid, or by welding studs to the surface, but the unpleasantness of the sound and overall sensation perceived by the traveling public remains. Another type of damage to which open-grid decks are vulnerable is breakage of bars when chains, dragged from passing vehicles such as car haulers, become lodged in the grid openings. Open-grid decks are also prone to fatigue failure at the welds. The location and nature of the welds create a severe condition for fatigue susceptibility. For all the reasons above, open steel-grid decks are falling from favor.

Concrete-filled, partially filled, and overfilled steel-grid decks (now referred to as *grid reinforced-concrete bridge decks*) are also available and have often provided many years of service under heavy traffic with minimum maintenance. Where the concrete is filled only to the surface of the steel grid, wear of the concrete between the grid members, called *cupping,* can result in an unpleasant and unsafe riding condition. Therefore, overfilling is recommended.

In a few cases, concrete-filled steel-grid decks have been known to "grow," breaking welds to the supporting members. After extensive testing and analysis, the cause was determined to be corrosion on the vertical interfaces between the steel and the concrete fill. Although a very small expansion occurred at each interface, the accumulated expansion measured several inches at the ends of units. This phenomenon emphasizes the importance of preventing corrosion by any suitable means. In this case, the use of a corrosion-inhibiting concrete admixture seems appropriate

An attribute of the steel-grid deck, whether filled or open, is that it is or can be fabricated off-site, complete with concrete fill and wearing surface if necessary. This can be advantageous for speedy redecking where downtime must be held to a minimum, and may be a reason for selecting this type of deck even if weight reduction is not necessary.

A more recent (1980) variation of the concrete-filled steel-grid deck is the patented "exodermic" deck, where a thin reinforced-concrete slab is constructed on top of and made composite with the steel grid.

www.EngineeringEBooksPdf.com

Another type of steel deck is the orthotropic deck, where the steel plate that supports traffic, and its stiffeners, are a part of the longitudinal load-carrying member of the bridge. Some of these decks have experienced problems with wearing surface adhesion, but the main reason they are not used more extensively is their high cost of fabrication.

Corrugated-Steel Bridge Flooring. Corrugated-steel bridge flooring, like stay-in-place steel forms but thicker (up to 3/8 in or 9.5 mm thick), can be used on bridges such as existing truss bridges where the tops of the stringers are at the same level transversely. The planks are usually galvanized. They extend the full width of the roadway but are narrow, and so can be erected without cranes. The planks are fastened to the stringer flanges by bolted clips or by plug welding in holes over the stringers, thus permitting installation by the owner's forces. The deck is then paved with asphalt concrete. The valleys are filled first, and then the entire deck is overlaid, building in crown if necessary. To promote longevity of the plank and wearing surface, drainage holes are placed in the valleys of the plank. However, leakage of salt-laden water can corrode supporting stringers. Measures can be taken to prevent leakage, including seal-welding the seams, and eliminating the drain holes and waterproofing the entire plank surface before paving, but these measures can make this floor system costly.

4.7 CONCRETE BRIDGE DECK DESIGN

AASHTO *Standard Specification* requirements for design of concrete bridge deck slabs on longitudinal beams are based on distribution of loads in the slab according to Westergaard theory and assume flexural action of the slab. On the basis of these specifications, many states have developed design tables and charts for quick determination of slab thickness and both primary (transverse) and secondary (longitudinal) reinforcement.

The main variables in the design of the deck slab are

- Beam spacing
- Concrete strength
- Weight allowance for future paving
- Live load (generally HS 25 or, LRFD, HL-93)
- Continuity factor for dead load

Applying the specifications, the simple dead and live load moments per unit width of slab are calculated. Dead load includes the client-specified future paving allowance, weight of any separate wearing surface, and weight of the deck slab including any monolithic wearing surface. Live load is the wheel load(s) of the client-specified HS or HL truck loading. The simple span moments are calculated for the design slab span length, and are then modified for continuity over the beams. For this factor, most states use 0.8 for both dead and live load, but some states use 1.0 for dead load. The moments are factored, and the slab is designed by the strength method using the slab thickness minus any monolithic wearing surface considered subject to loss due to traffic wear. Effective depth dimension d from the compressive face is usually different for the top and bottom steel, because a minimum cover of 1 in (25 mm) is permissible and generally adequate for the bottom of the slab but much greater cover, up to 3 in (76 mm), is specified for the top steel to provide protection against intrusion of chlorides. The rebar diameter is usually different as well, since most agencies maintain the same spacing of top and bottom steel and vary the bar size. However, practices vary among agencies. For example, the New Jersey DOT

www.EngineeringEBooksPdf.com

keeps the bar size the same for top and bottom reinforcement. A uniform spacing makes bar placement and inspection easier and facilitates concrete placement. Secondary steel is provided in accordance with the specifications, with a lesser amount in the outer quarters compared with that in the middle of the distance between beams. But again, practices vary and some states prefer uniform spacing of secondary steel.

Slab overhang beyond outside beams is limited so that the reinforcement furnished for interior panels is adequate for the overhang, or extra reinforcement is provided if required. Slab overhang is sometimes also limited for construction reasons; the weight of fresh concrete on an excessive overhang, acting through a diagonal brace, can cause local buckling of unstiffened steel girder webs or can damage the web of a prestressed-concrete girder.

Some states such as Ohio DOT require that the top distribution reinforcement is placed above rather than below the primary steel. This practice was adopted in recognition of the fact that most deck slab cracking is transverse, and the distribution steel is more effective in resisting that cracking if placed closest to the surface.

Some states continue to use deck slab design tables developed using the allowable-stress design method, while other states have updated using the LRFD method. In addition, some states assign an allowable concrete stress that is less than AASHTO *Standard Specifications* would allow on the basis of the required 28-day strength of the specified concrete. These conservative practices reflect the prevalent attitude gained from a common experience of premature and extensive bridge deck deterioration, mostly in the form of spalling due to reinforcing bar corrosion. If the preventive measures now being taken prove to be effective in eliminating or greatly reducing this premature deterioration, those states will be more inclined to adopt less conservative design methods.

The design procedures described above have resulted in safe designs. However, research has determined that significant membrane action is present in interior panels, and actual stresses are considerably lower than design stresses calculated on the basis of flexural action. Following laboratory testing, the province of Ontario and several states have constructed and tested full-scale bridges with so-called orthotropic deck slab reinforcement. In these designs, the reinforcement is the same size and spacing in both directions, and of a reduced total amount compared with designs by AASHTO *Standard Specifications*. These experimental decks have performed well, in most cases.

4.8 CONCRETE BRIDGE DECK CONSTRUCTION

During construction, bridge deck concrete can be supported by reusable wood forms, permanent stay-in-place steel forms, or precast prestressed-concrete planks. Where permitted, contractors will generally use stay-in-place steel forms rather than removable wood forms. Allowance must be made in the design of the bridge for the extra weight of the steel forms, and for extra concrete where required. The forms are corrugated. Where the bottom transverse bar spacing can be made the same as the pitch of the corrugated form, the extra concrete in the valley below the nominal bottom of the slab line is compensated for by the concrete displaced by the peak of the corrugation above the bottom of the slab line, and the allowance can be for the weight of the forms only. If the spacing is different from the pitch, which is usually the case for curved bridges, a greater allowance will be required because extra concrete must provide the necessary cover. For long slab spans, the stay-in place forms are corrugated, but with a flat top plate. In this case, no extra concrete is required, and the extra weight allowance is for the forms only.

Prestressed-concrete planks can also be used as support forms. In this case, the planks also serve as a component of the structural slab. Some agencies have used prestressed planks for years with success, but others have experienced problems—particularly, longitudinal cracking through the cast-in-place top slab over the ends of the planks at the supporting beams—and have discontinued their use.

www.EngineeringEBooksPdf.com

When stay-in-place steel forms or prestressed-concrete planks are used, the slab overhang beyond the outside beam is generally formed separately using conventional removable wood forms.

4.9 CONCRETE BRIDGE DECK PROTECTION

Concrete bridge decks designed by the current AASHTO method described above have large amounts of reinforcing steel. (Some say it is enough to drive on, and that the concrete is provided just to make the ride smoother!) In the past, in areas where deicing salts are used, corrosion of the top steel caused extensive spalling that led to premature repair or replacement of many decks. In some coastal areas, saltwater spray on the bottom of deck slabs has caused similar corrosion of the bottom reinforcing steel.

For the foreseeable future, concrete bridge decks will continue to be reinforced with steel bars, even though revised design procedures may be adopted that permit lesser amounts. Therefore, it will continue to be necessary to protect those bars against corrosion. Reinforcing bar corrosion can be prevented or forestalled by a number of means, including:

- Making concrete more resistant to penetration of chlorides (less permeable; see HPC in Art. 4.5.1)
- Preventing chlorides from penetrating the concrete by applying concrete sealers or waterproofing membranes
- Applying a physical coating to the bars to prevent contact between the chlorides and the bars
- Adding a corrosion-inhibiting admixture to the concrete mix
- Installing cathodic protection

Concrete Permeability. As discussed above, improvements have been made in the quality of concrete, and in the development of special concretes, in an effort to reduce the amount of chlorides reaching the reinforcing steel. These improvements themselves may be adequate to prevent premature corrosion, especially in areas where the application of deicing salt is moderate. In areas of greater rates of salt application, it may be necessary to provide supplementary protection of the types listed above.

Concrete Sealers. Sealers are available that can reduce the permeability of hardened concrete. Forms of silanes and siloxanes are among the best sealers. In some cases, however, the field performance of concrete sealers has not lived up to expectations based on laboratory testing. When selecting a sealer, one should avail oneself of the most current field evaluations of effectiveness over a reasonable period of time, and not rely solely on the claims of the manufacturer's representative.

Waterproofing Membranes. Where an asphalt concrete overlay is placed on a bridge deck in an area where deicing salt is used, the salt will penetrate through the overlay unless an impermeable membrane is installed on the concrete deck. Both hot and cold rubberized materials are available, as well as more labor-intensive built-up systems. Built-up systems, like roof systems, combine layers of fabric alternated with applications of a bituminous coating. Built-up systems may cause the asphalt overlay to slide on steep grades or superelevation. All kinds of membranes are subject to development of blisters due to entrapped water vapor if the membrane cures before the vapor escapes. This can generally be

www.EngineeringEBooksPdf.com

prevented by placing the membrane when the temperature in the deck is decreasing, that is, during the late afternoon or evening, rather than in the morning or midday.

Epoxy-Coated Reinforcing Steel. The coating that has received the most widespread acceptance for physical encapsulation of the reinforcing bars is fusion-bonded epoxy coating. Some agencies require epoxy-coated bars for the top mat only; others require them top and bottom.

The epoxy coating is applied electrostatically in powder form to cleaned and heated bars in a continuous operation, and rapidly quenched immediately after being applied. The coating is quite hard, but must be handled carefully to avoid damage. Nylon slings are used to lift the bundles, and padding is used within the bundles. Specifications that allowed a small but liberal percentage of openings in the coating have recently been reexamined and tightened. Following the widespread adoption of epoxy-coated reinforcing steel, some unfavorable experience in marine structures has put somewhat of a damper on its enthusiastic acceptance.

A disadvantage of epoxy coating is that the coating reduces the bond between the bars and the concrete, requiring longer lap splices.

Galvanized Reinforcing Steel. About the time when many states began to install epoxy-coated bars for experimental evaluation, some states experimented with galvanized bars. This was based partly on the contention of some corrosion experts that flaws in epoxy-coated bars would result in aggravated corrosion at those flaws. Pennsylvania adopted galvanized reinforcing steel for a time as its primary means of protecting the bars. Now at least one state has changed to that policy.

Galvanizing does not provide a permanent barrier, but creates a sacrificial coating, and consequently would be expected to have limited life expectancy when exposed to sufficient quantities of chlorides over a period of time. Because of the electrochemical nature of the way galvanizing prevents corrosion, it should not be used on only one mat of reinforcement.

Corrosion-Inhibiting Admixtures. Another means of protecting against corrosion of reinforcing steel, without application of physical coating to the bars, is the incorporation of a corrosion-inhibiting admixture in concrete. The amount of chemical added to the concrete mix is proportioned to the amount of chlorides expected to penetrate to the reinforcing steel. Therefore, the degree of effectiveness of the inhibitor is related to the accuracy of that prediction. Higher dose rates will provide greater protection, but at greater cost. A lower dose rate may not provide the necessary protection.

Some inhibitors have undesirable effects on other properties of the concrete, but one admixture that is effective without side effects is calcium nitrite.

Available publications do not provide specifications or guidelines for the evaluation and comparison of corrosion-inhibiting admixtures, requiring users to rely on information provided by product manufacturers. However, a National Cooperative Highway Research Program project is planned to develop test procedures to evaluate and compare the effectiveness of corrosion inhibitors, and to recommend performance criteria for their acceptance.

Cathodic Protection. Since rebar corrosion is an electrochemical reaction, an effective means of preventing or arresting corrosion is cathodic protection. The two main types of cathodic protection are sacrificial anode and impressed current. In the sacrificial anode system, disks of metal are installed at intervals in the deck before placement of the deck or overlay concrete. Corrosion activity involves the consumption of this metal rather than rusting of the bars. The impressed-current method requires the input of electricity, and therefore requires an electric source and is dependent on the continued monitoring and

www.EngineeringEBooksPdf.com

maintenance of the system. Power consumption is low. One reason cathodic protection was late in being implemented is that it involves the expertise of electrical or corrosion engineers rather than the structural engineers who are normally responsible for bridge design and rehabilitation.

4.10 DECK SURFACES AND DECK OVERLAYS

New Construction. Some agencies use asphalt concrete overlays on new decks and protect the deck with a waterproofing membrane below the asphalt overlay. Currently, however, concrete-wearing surfaces are more popular on new bridges than asphalt concrete. Concrete surfaces may be placed as an integral part of the structural bridge deck (monolithic), or placed as bonded overlays of various types including dense concrete, latex-modified concrete, and silica fume concrete (see Art. 4.5.1).

Repair of Existing Bridge Deck Surface. The concrete overlays discussed above can be used, in combination with patching of spalled areas, as a means of repairing deteriorated existing bridge decks. In addition to these overlays, which are at least $1\frac{1}{4}$ in (32 mm) thick and usually thicker, thin overlays 1/2 in (13 mm) or less thick are available. Binder materials include epoxy, epoxy-urethane blends, and polyester resin. Because of their thinness and light weight, they are advantageous for bridges where weight reduction is desirable, or where thicker overlays would present problems with expansion joint or scupper modification, or where railing height would be reduced more than an acceptable amount by a thicker overlay. In recent years use of methyl methacrylate (MMA)–type material has gained popularity due to its waterproofing properties coupled with extremely high strength and chemical resistance with an abrasion-resistant surface.

The repair of a spalled bridge deck involves removal of the fractured or disintegrated concrete by some means. Mechanical methods include scabblers, scarifiers, and jackhammers. Because these methods all tend to create microfractures in the sound concrete, a better method is hydroblasting, or use of very high pressure water jets. This method is selective in that it automatically removes unsound concrete while leaving the sound concrete undamaged. The operation consumes large quantities of water and is noisy, and passing motorists must be protected from stray jets and flying debris. The muddy effluent must be disposed of properly, and not allowed to flow into catch basins.

After removal of unsound concrete, or concurrently with it, the surface of the remaining good concrete is removed to a depth of about 1/4 in (6.4 mm). The entire surface to be overlaid is dried or wetted to the required moisture condition, and the overlay placed. Where deep removal areas are present, it is generally preferable to patch these areas in a separate operation from the general overlay. After texture is applied, the fresh overlay concrete is then given an appropriate cure of the required duration. In cold weather the overlay must be prevented from freezing. For this reason specifications require placement at temperatures well above freezing.

4.11 SELECTION OF MATERIALS FOR MAIN SUPERSTRUCTURE MEMBERS

For the primary superstructure members of a bridge (not including the deck), concrete (reinforced and prestressed) and structural steel are the principal candidates. Concrete and steel both have desirable attributes and shortcomings as bridge materials. In general, bridges of both materials can be designed, constructed, and maintained to ensure long life.

www.EngineeringEBooksPdf.com

Claims of both steel and concrete industry associations, including references to national bridge inventory data used to support contentions of superiority of one material over the other, must be critically considered. One can find examples of both concrete and steel bridges that are old and in good condition, and conversely, relatively new and in poor condition. The trade associations do a service in countering each other's claims.

Some advantages of concrete bridges are

- They do not require painting.
- They do not rust (but are susceptible to rebar corrosion).
- They can be formed to the desired shape (if of reinforced concrete).
- If of prestressed concrete, they may be fabricated more quickly than steel, although in some emergencies steel replacement structures have been fabricated and erected as quickly as prestressed members.
- They are not susceptible to fatigue failure (to date).

Some advantages of steel bridges are

- Lighter weight permits smaller cranes for erection.
- Lighter weight permits reduction of substructure size, number of piles, etc.
- They are more readily dismantled and reused at the same or another site.
- Use of conventional erection and construction techniques may avoid construction cost overruns and litigation sometimes experienced with segmental concrete.
- Attachments to bridge are readily made by bolting or welding.
- Components are accessible and visible for inspection.
- Members damaged by vehicular collision may be more easily repaired than concrete members.

For short- to medium-span bridges, the selection of material will depend on which bridge type and material are the most economical for the particular site. This may be known by experience with bids received over a period of time, or can be determined by taking alternative bids on projects.

Long-span bridges are often designed in both steel and concrete, or in different framing systems of the same material, so that contractors bidding on both sets of plans can make the determination of which is less costly. An increasingly common practice for bridges of all sizes is to allow the contractor to submit alternative designs, which must be designed by professional engineers and conform to the requirements of the owner.

4.12 CORROSION PROTECTION OF NEW STEEL BRIDGES

The application of protective coatings to steel bridges, and the maintenance reapplication of coatings, is costly and so alternatives to the use of coated steel should be sought. Where appropriate, unpainted weathering steel should be used instead (see Art. 4.13). If a coated bridge is still the best candidate for the particular location, a long-lasting coating system should be applied.

Modern Paint Systems. The development of high-performance paint systems for new bridges has resulted mostly in two- or three-coat systems involving combinations

www.EngineeringEBooksPdf.com

of various materials including organic and inorganic zinc, epoxy, and urethane. The prime coats of these systems require cleaning the steel to a white or near white condition, which is an expensive operation even when done conveniently in a steel-fabricating plant. The application of subsequent coats, especially field coats, is labor-intensive. Despite these factors, these new systems can provide acceptably economical protection.

Water-Based Paint. The most recent emphasis in the development of paint systems has been on water-based paints. Because they do not contain volatile organic compounds, water-based paints can easily conform to the environmental restrictions placed on the levels of those compounds emitted during the painting process. Evaluation of this system and other systems continues. At this time, one can say that there is no one single paint system that is the best and most economical for all exposures. If a department of transportation or another agency representing an area with diverse geography, climate, or industrial development dictates a single-paint system for all parts of that area, it is likely that some of the bridges will be overprotected and some underprotected.

Galvanizing. Depending on local availability of galvanizing facilities of adequate size, steel members of limited length can be hot-dip galvanized. In addition to the deposition of zinc, the galvanizing process results in a change in chemistry of the surface of the steel, where an alloy is created, so that a degree of protection remains after the zinc coating is gone. The different stages of loss of coating and rusting that will eventually occur on galvanized steel can be seen on exposed highway hardware such as galvanized steel roadside barriers, luminaire supports, and traffic sign and signal supports. Since these structures are more exposed to salt spray than a bridge superstructure may be, unless the bridge is a grade-separation structure, the longevity of the protection may be expected to be greater on a bridge.

Fusion-Bonded Coating. The coating of large structural members by fusion bonding with epoxy or other powders is now feasible in at least one coating plant, but this method of coating has not been used extensively for bridges. It is frequently used for pipe piles.

Metallizing. Another method of coating steel, which has been used on small components of new bridges, such as bearing plates, and on a few existing bridges, is application of a metallic coating by the flame spray method, or "metallizing." The existing steel is first prepared to a near white condition. Then a continuously fed wire is vaporized in a flame and sprayed onto the surface of the steel. Although results have been satisfactory, the cost on complete bridges has been extremely high compared with other methods of coating.

Selection of Protection System. Environmental conditions and owners' experience may dictate the selection of a corrosion protection system. Where acceptable life of protection can be expected from galvanizing, painting, or use of unpainted weathering steel, the selection may be based on initial or life-cycle cost. Alternative bids should be encouraged.

4.13 WEATHERING STEEL

The cost of initial painting and periodic repainting of structural steel bridges can often be eliminated by the use of bare weathering steel. From an economic standpoint, the use of multicoat high-technology paint systems should be reserved to those bridges that are not suitable candidates for weathering steel.

www.EngineeringEBooksPdf.com

To ensure successful long-term performance, the Federal Highway Administration (FHWA) has published "Guidelines for the Use of Unpainted Weathering Steel." Principal considerations are as follows:

- Consider with caution use in marine coastal areas; in areas of frequent high rainfall, high humidity, or persistent fog or condensing conditions; at grade separations in "tunnel-like" conditions; and at low-level water crossings. (Some states such as New Jersey require painting of weathering steel girders if within 15 ft (4.6 m) of salt water.)
- Eliminate expansion joints where possible.
- Use a trough under open expansion joints.
- Paint all steel within a distance of 1½ times the depth of girders from bridge joints.
- Seal box members where possible or provide weep holes to allow proper drainage and circulation of air.
- Seal overlapping surfaces exposed to water to prevent capillary penetration action.
- Implement maintenance and inspection procedures designed to detect and minimize corrosion.
- Divert roadway drainage away from the bridge.
- Clean troughs, reseal deck joints, and periodically clean and—when needed—repaint all steel in the vicinity of joints.
- Regularly remove all dirt, debris, and other deposits that trap moisture.
- Regularly remove all vegetation that can prevent natural drying of wet steel surfaces.

4.14 DEFLECTION AND EXPANSION JOINTS

Joints in bridges fall into two categories: deflection joints and expansion joints.

4.14.1 Deflection Joints

Contrary to what the name implies, deflection joints, when placed in concrete barriers and parapets, are used primarily to minimize the vertical shrinkage cracking that would otherwise occur in long, unjointed panels. Some states permit a longitudinal spacing of joints as great as 30 ft (9.1 m) in simple spans. Over piers of continuous bridges, the spacing is generally less, 7.5 ft (2.3 m) or closer. Preformed joint filler is used to form the joints and is left in place. Sometimes the placement of parapet concrete is required to be done in two stages, with placement of alternate panels only in the first stage, to facilitate placement of the joint filler.

When barriers are permitted to be slipformed, the deflection joints are sawn an inch or so deep on the periphery of the barrier, and then caulked with a joint sealer. In this case, the steel is not made discontinuous at the joints. Slipforming is a much faster way of constructing barriers, but the finished appearance, especially the straightness of the top, is sometimes rather crude compared with conventionally formed barriers.

Deflection joints can extend full depth of the barrier or parapet, or through only the top portion. Deflection joints in the New Jersey safety-shape barriers, when the concrete is placed in forms, are sometimes placed only above the curb portion of the barrier. In this case, the longitudinal reinforcing steel is continuous in the curb, but discontinuous at the joints above the curb. This usually results in reflection cracks developing in the curb below the joints.

www.EngineeringEBooksPdf.com

It is also common, in spite of the joints, to see one or more vertical cracks between the joints in long panels. These cracks may be aggravated by bridge deflection but are caused primarily by shrinkage. The development of these cracks illustrates a rule of thumb applied to slabs on grade, that there will be a tendency to crack if the slab is longer than twice its width. However, the likelihood of ultimate damage to the bridge resulting from these unwanted cracks is small, and so the cost to provide more closely spaced joints is not justified.

Deflection joints are also used in the deck slab at piers or over transverse floor beams where the slab is not continuous (and sometimes when it is continuous), and at abutments where the bridge slab abuts the approach slab. Since the amount of movement is small, due only to rotation, the joint can be sealed with a small compression seal or with liquid joint sealer.

4.14.2 Expansion Joints

Bridge roadway expansion joints are provided to accommodate the thermal changes in the superstructure, and, in the case of prestressed-concrete bridges, to accommodate creep shortening of the superstructure as well. They are required at abutments that are restrained against longitudinal movement and at the end of supported superstructures free to translate due to provision of expansion bearings. In some long-span steel bridges, expansion joints and expansion bearings must also accommodate change of length of span due to live load deflections. Expansion joints are not required in short bridges where movement is small—for example, in steel bridges with span less than 50 ft (15 m)—or in longer bridges where the superstructure is fixed to the abutment (jointless bridges or integral construction). For these longer bridges, designs that eliminate or minimize bridge expansion joints, without introducing problems in the approach roadway or causing distress in the superstructure or substructure, are favored. (See Arts. 4.15 and 4.16.7.)

Expansion joints, or, more accurately, rotation joints, are also provided where the deck is made discontinuous, or a hinge is provided, in anticipation of settlement of the end of a span.

Where expansion joints are required, they should be sized to accommodate the anticipated movement with a liberal allowance. A joint-sealing device such as a strip seal can be destroyed by one occurrence of a record cold period. For deep simple-span girders, the joint movement due to live load rotation of the end of the span should be included. Specifications for installation of joints should take setting temperature into account. A table giving required joint opening dimensions for different ambient temperatures is preferred over an equation for adjustment of a fixed dimension that is applicable to a given temperature. In areas where roadway deicing salts are not applied, it may not be necessary to seal expansion joints. Even in this case, though, sealed expansion joints will prevent intrusion of foreign objects, which can damage the bridge by causing excessive local pressure, and will prevent accumulation of debris on bridge seats.

Large-capacity open expansion joints can be fabricated using steel plates with meshed fingers, the so-called finger joint. Finger joints have served well for many years on many bridges. The plates used in these joints must be thick to withstand the direct cantilever wheel loading to which the fingers are subjected. The two halves of finger joints are massive steel fabrications, but they can be gas-cut with accurate dimensional control. In snowplow areas, where the ends of the fingers may be snagged by the plow blade, the use of a finger joint should be avoided, or the ends of the fingers should be rounded downward. In areas where joints should be sealed, the finger joint surface may be left open, but an elastomeric trough should be installed beneath the joint.

www.EngineeringEBooksPdf.com

Bicycles should not be permitted on bridges with finger joints, because the wheels can drop into the space between fingers, causing injury to the rider. Conversely, open finger joints should not be used on bridges on which bicycles are permitted.

In areas of salt application, expansion joints must be sealed. Northern states have incurred tremendous cost to repair damage to superstructures and substructures in the form of steel corrosion, prestressed-concrete beam deterioration, and concrete spalling due to salt drainage through open or inadequately sealed expansion joints.

4.14.3 Expansion Joint Sealers

Several types of expansion joint-sealing devices are available. Properly sized and installed, they can greatly reduce, if not eliminate, drainage through the joint. Some of the available types are

- Polymer-modified asphalt
- Compression seal
- Slab-type seal
- Strip seal
- Modular seal

Polymer-Modified Asphalt. For resurfacing projects where an asphalt concrete overlay or a portland cement concrete overlay is placed on an existing bridge deck, the approach slab is also overlaid, and the joint movement is moderate (no more than 1.5 in or 38 mm), an expansion joint seal using a poured liquid joint sealer and "armor" of polymer-modified asphalt concrete (elastomeric concrete) can be used. Construction is simple and requires only a minimum of removal of the existing structure, if any. The elastomeric concrete will bond to steel, concrete, or asphalt concrete, and also develop a tenacious bond with the liquid joint sealer, which is poured over backer rod installed between formed vertical faces of the elastomeric concrete. Figure 4.1 illustrates this seal.

Compression Seal. The compression seal (Fig. 4.2) is a rectangular elastomeric tube that has internal webbing and is manufactured by extrusion. It is installed between formed or sawn faces of concrete, or, more commonly in bridges, between steel armor. A lubricant/adhesive is used to facilitate installation and prevent displacement in service.

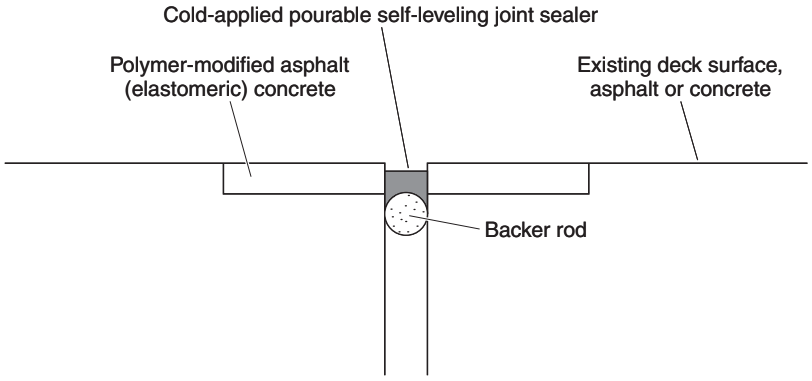

FIGURE 4.1 Cross-section of polymer-modified asphalt concrete joint seal.

www.EngineeringEBooksPdf.com

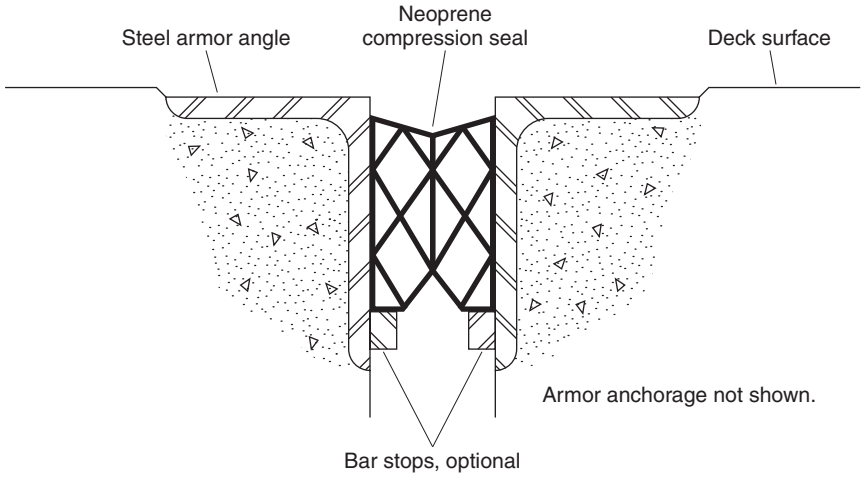

FIGURE 4.2 Cross-section of compression seal.

Compression seals can be of the high-compression type, which relies more on internal compression than on the adhesive to stay in place, or the low-compression type, which relies more on the adhesive. The high-compression type is more subject to loss of tight fit due to compression decay with age, and so is less desirable. Catalogs will not describe the seals in this manner, but manufacturers' representatives will know. A clue to the type of seal is the number of internal webs, which is greater for the high-compression type.

Compression seals are available for joint widths up to 5 in (127 mm), but some agencies impose a 4-in (102-mm) limit. Some skew can be accommodated by using a larger seal than would be required for an unskewed joint. A maximum allowable skew of 15° (with respect to a line normal to the bridge centerline) is imposed by one state. Seals should be one piece for the entire length of the joint.

A variation of the compression seal is a proprietary seal that has no internal webbing. It is installed in the joint by air inflation, which presses the sides against the supporting surfaces, onto which an epoxy adhesive has been applied. The air pressure is released after an adequate curing period, and the adhesive is relied upon to maintain the seal in position.

Slab-Type Seal. The slab-type sealing device consists of an elastomer and internal steel plates that combine to provide a surface that bridges over the joint opening and supports traffic loads. There are notches in the slab that, along with the elasticity of the elastomer, permit it to change length. The sides of the slab are supported on horizontal steel or concrete surfaces, and a bedding adhesive is applied before the slab is fastened down. The slab is fastened to the bridge by closely spaced bolts.

A primary disadvantage of the slab-type seal is that large stresses are induced in the slab by temperature changes, which, along with pounding by traffic, tend to break it loose. Some users of slab-type seals have had satisfactory experience with them, but most users have changed to other types of seals.

Strip Seal. The strip seal (Fig. 4.3) is an elastomeric extrusion, called a *gland,* that spans between supporting steel armor. It is anchored by enlargements on the ends of the glands, which are inserted into grooves in the armor. The gland is generally only one layer thick, but some strip seals have two layers, the lower of which should act as a back-up if the top layer is punctured. A lubricant/adhesive is used to facilitate installation. Like

www.EngineeringEBooksPdf.com

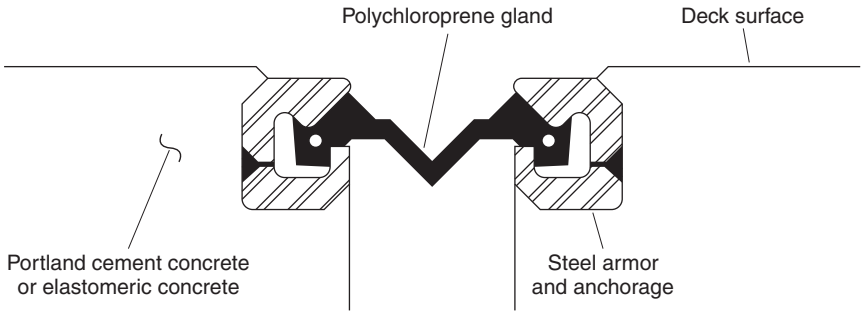

FIGURE 4.3 Cross-section of strip seal.

the compression seal, the gland should not be spliced. Special tools should be used to install the gland, and the gland should not be stretched during installation. Left by themselves, contractors may try to use inappropriate tools and brute force to install the gland.

Strip seals can accommodate skew somewhat better than compression seals and are favored by agencies for joint openings larger than can be accommodated by compression seals.

Modular Seal. At the ends of long bridges, or the ends of individual units of long bridges, the joint movement may be greater than can be accommodated by a single joint seal of the types described above. In this case a finger joint with an elastomeric trough may be used, or a modular joint can be provided. The modular joint consists of multiple compression seals or strip seals separated by steel or aluminum structural members, which are in turn supported by bars that span transversely to the joint, parallel to the centerline of the roadway. Figure 4.4 illustrates this type of seal. The support mechanisms can become quite elaborate, with sliding bearings and components to ensure that uniform spacing between longitudinal seal elements is maintained. The designs must provide for joint rotation as well as translation. It is also important that the design of these joints allows for replacement of components.

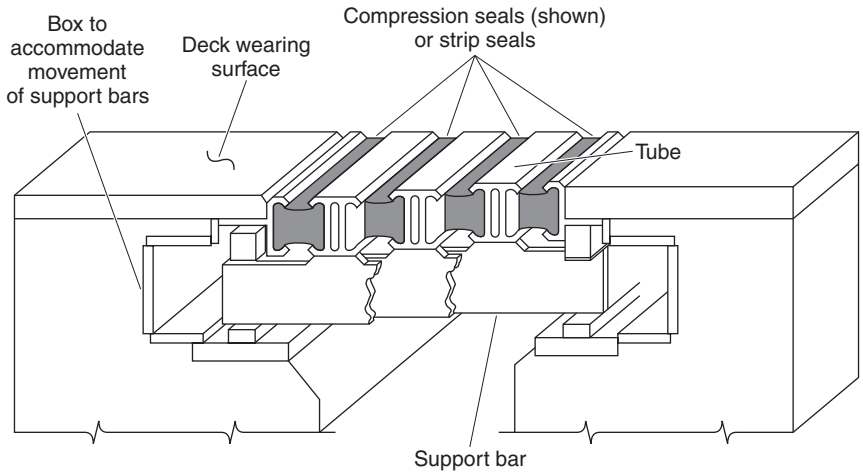

FIGURE 4.4 Cutaway view of modular expansion joint seal.

www.EngineeringEBooksPdf.com

The fact that many specifiers of sealed expansion joints do not expect them to be, or remain, watertight throughout their life is indicated by the practice recommended for weathering steel bridges (see Art. 4.13). That recommendation is that the steel be painted at the joints, and is applicable to sealed and unsealed joints alike.

Failure of an expansion joint can occur in the sealing mechanism itself, but in the past, failures have occurred as frequently in the anchorages. Some causes of anchorage failure have been

- Inadequate consolidation of concrete below wide legs of armor angles
- Too small or too widely spaced welded stud anchors
- Vulnerability to snowplow damage because the sealing device was not recessed below the wearing surface
- Pressure exerted during thermal changes by overlapping steel angles because the joint design did not properly accommodate longitudinal grade
- Material used to bed or anchor the joint sealing device that was not shrinkage-resistant and broke under traffic

4.15 CONTINUITY AND JOINTLESS BRIDGES

Where possible, bridges should be made continuous. Continuous spans are less prone to catastrophic collapse from loss of substructure support due to stream erosion, earthquake, or vehicle or vessel collision. Bridges with multiple simple spans must have two lines of bearings and an expansion joint at each intermediate support. Two lines of bearings, each having the required capacity for the end of a simple span, will almost certainly be more expensive than the single line of bearings required for continuous spans. Expansion joints are expensive and in most geographic locations should be sealed against storm drainage and intrusion of debris, which further increases their cost. (Even the manufacturers of sealed expansion joints agree that the best joint is no joint.) Aesthetically, continuous bridges are generally superior, especially if constant depth is maintained, and do not require the cosmetic plates or other devices that have sometimes been used to conceal the gaps between simple spans.

Continuous bridges are generally more economical than simple-span bridges because of the reduction of mid-span moments. Most bridges can be designed continuous for live load, and some bridges may be designed continuous for dead load as well. In the case of precast prestressed-concrete bridges, it is generally more convenient and economical to place the deck slab concrete while the beams are supported on their bearings, without temporary intermediate shoring, so that the beams are not continuous until the deck slab has acquired its strength and top longitudinal reinforcing bars are present in the composite section over the piers to resist negative moment. Therefore, these bridges are designed continuous for live load and for superimposed dead loads (loads above the deck slab) only. Note that this type of construction unavoidably requires two lines of bearings at intermediate supports because practical prestressed-concrete design and construction require that the spans be simple initially. This is called "made-continuous" construction.

There are situations where simple spans are preferable. Examples include situations where adjacent spans are unavoidably different in length and depth, or where adjacent spans have widely different geometrics with beam layouts that do not lend themselves to continuity, such as varying beam spacing or splayed framing. Simple spans may also be preferable where the bridge is part of a facility, such as an interchange, where stage construction will require future removal or addition of one or more spans. Simple spans are also desirable where differential substructure settlement is anticipated.

www.EngineeringEBooksPdf.com

4.16 CHARACTERISTICS AND SELECTION OF BRIDGE TYPES

The type of bridge and the span layouts are interdependent. Bridge type cannot be selected without regard to the length of spans, the ratio of adjacent span lengths, and whether spans are to be made continuous.

Table 4.2 lists common types of bridges and the maximum span lengths below which they may be an economical choice. The maximum spans tabulated are approximate, and are presented as a guide only. They are subject to increase as technology advances. Similarly, increases in specified live load may tend to reduce the maximum span. The economic competitiveness of a particular bridge type varies with regional availability and workload of fabricators and specialty contractors, yearly fluctuations of labor and material costs, and other factors. Thus, it is usually desirable to seek and permit bids on alternative bridge types.

Characteristics of some of the more common bridge types for short and intermediate spans and considerations in their selection are discussed in the following articles.

4.16.1 Reinforced-Concrete Flat-Slab Bridge

For short simple spans (up to 30 ft or 9.1 m) and for somewhat longer continuous spans (interior spans up to 55 ft or 16.8 m), reinforced-concrete flat slabs provide a minimum-depth bridge. Figure 4.5 shows a schematic of this bridge type. At a slab depth of about 2 ft (610 mm), the slab begins to become uneconomical, with too much of the section required to support itself.

Falsework is required to construct the slab. Where space is available beneath the structure, scaffolding may be used. If the bridge is over a stream, or over a highway or railroad

TABLE 4.2 Approximate Maximum Span for Various Types of Bridges

Type	Approximate maximum span, ft (m)
Reinforced-concrete flat slab, continuous	55 (17)
Composite steel beam (36-in series), simple	100 (30)
Precast prestressed-concrete voided box beam	120 (37)
Precast prestressed-concrete beams (bulb-tee), simple	120 (37)
Composite steel beam (36-in series), continuous	125 (38)
Precast prestressed-concrete beams (bulb-tee), made-continuous	140 (43)
Composite steel plate girder, simple	230 (70)
Precast prestressed-concrete beams (bulb-tee) spliced	250 (76)
Cast-in-place (on falsework) posttensioned-concrete box girder, continuous	300 (91)
Precast posttensioned segmental concrete box girder, continuous, balanced cantilever	400 (122)
Composite steel plate girder, continuous, parallel flange	460 (140)
Composite steel plate girder, continuous, haunched	540 (165)
Cast-in-place posttensioned segmental concrete box girder, continuous, balanced cantilever	850 (259)
Steel arch (New River Gorge, Fayetteville, West Virginia, U.S.A.)*	1700 (518)
Steel cantilever truss (Pont de Québec, Canada)*	1800 (549)
Steel cable–stayed (Stonecutters, Hong Kong)*	3340 (1018)
Suspension (Akashi Kaiko, Japan)*	6529 (1990)

Note: No attempt has been made to include every bridge type in the above tabulation.

*Indicates record span.

www.EngineeringEBooksPdf.com

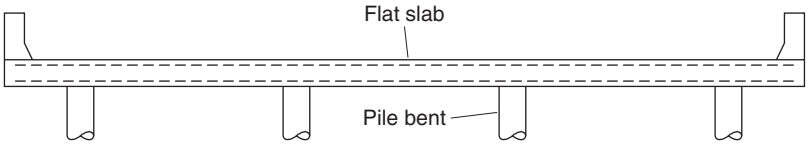

FIGURE 4.5 Cross-section of reinforced-concrete flat-slab bridge on pile bent; pile caps may be required for shorter spans.

where traffic must be maintained, the falsework must include support beams to span over the feature crossed. In that case, camber should be built into the falsework to compensate for its deflection. Also, the falsework must provide for the vertical geometry of the bridge and for deflection of the slab after removal of the falsework.

Longer continuous-slab spans can be constructed if the slab is haunched, that is, made deeper over the piers or bents. However, the cost and difficulty of constructing the forms, and bending and placing the longitudinal reinforcing bars, often negates the advantage of haunched construction.

Another type of construction that can be used to extend the span capability of slab bridges is voided construction. Voids, similar to those used to fabricate prestressed-concrete box beams, are used to replace the relatively ineffective concrete at mid-depth of the slab, thereby reducing the weight of the slab. However, where this type of construction has been used, it has generally been found to be more expensive than competitive types of bridges. A principal reason is the cost of providing adequate hold-down devices to prevent the voids from floating when the concrete is placed.

For balanced design of continuous-slab bridges, the usual rule that the end span should be shorter than the adjacent interior span may not apply. In the design of a three-span continuous flat-slab bridge with three equal spans of 30 ft (9.1 m), considering an HS 25 live load (a load 25 percent greater than HS 20) and the AASHTO Alternate Military Loading, a good balance resulted between maximum positive and negative moments using equal span lengths.

4.16.2 Prestressed-Concrete Box-Beam Bridges

The span range of a shallow bridge may be extended beyond the limits of a slab bridge by using precast prestressed-concrete box beams as illustrated in Fig. 4.6. The beams are prefabricated off-site. They are rectangular and, except for very shallow beams [12 in (305 mm)], which may be solid, have from one to three rectangular or circular voids. The void forms are either waterproofed cardboard or solid polystyrene foam and are left in the beams. Void drains must be provided to prevent entrapment of water. Prestressing strands are located on the bottom and in the sidewalls of the box, and may include debonded or deflected strands. The selection depends upon owner preference or, where the designer and owner allow the option, fabricator preference.

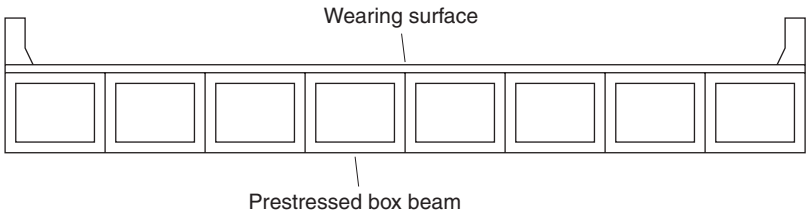

FIGURE 4.6 Cross-section of prestressed-concrete box-beam bridge.

www.EngineeringEBooksPdf.com

This type of bridge can be constructed using adjacent beams or spread beams. In adjacent box-beam construction, prefabricated box beams are placed side by side, abutting each other. The box beams are connected by transverse tie rods or posttensioned tendons, or by welded connection of tie plates to plates embedded in the tops of the beams. Shear keys between beams are grouted. The combination of transverse connection and grouted shear keys is intended to make the beams act together as a unit and prevent relative movement and cracking at the longitudinal joints. This type of bridge can be erected quickly, and temporary traffic can be maintained on partially completed portions of the bridge. These features have made this a popular type of bridge, despite at least one shortcoming discussed below, and sometimes cause it to be selected over a competitive type when both types are viable candidates for a bridge of a given span length.

For low-traffic-count roads, the tops of the beams may constitute the riding surface, but on most bridges a topping will be used. This may be a composite concrete slab, which adds to the strength of the bridge, or an asphalt concrete overlay, which is used to smooth out any irregularities between beams, to compensate for difference between roadway profile and final camber of the beams, and sometimes to maintain continuity of pavement type when the adjacent roadway is asphalt concrete. A waterproofing membrane should be used with this type of construction, with special attention to the joints.

The elimination of movement at the longitudinal joints and the maintenance of a waterproof condition has not always been achieved, even when a composite concrete slab has been used. Leakage of roadway drainage containing deicing salt through longitudinal joints has sometimes resulted in corrosion of the prestressing strands. In some cases, wires have broken.

In spread-box construction, the beams are spaced apart, and a reinforced-concrete slab is constructed on top. The slab between the beams is formed, and stay-in-place steel forms are frequently used. This has been an economical type of construction in Pennsylvania. In bridges with end spans shorter than interior spans, the beams can be the same depth for aesthetic reasons, with the spacing between beams varied to meet structural requirements. However, diagonal and vertical cracks have been observed in the sidewalls of spread-box beams near supports in sharply skewed bridges. The fine diagonal cracks were most evident on the acute sides of the box beams.

4.16.3 Prestressed-Concrete I-Beam Bridge

Prestressed-concrete beams of the basic I-shape, but with variations, can be used over approximately the same range of spans as steel beams. The deepest AASHTO standard prestressed beams (72 in or 1828 mm) have a somewhat greater simple-span capacity than 36-in-deep (914-mm) rolled steel beams, although deeper rolled beams are available. This type of bridge is illustrated in Fig. 4.7.

Prestressed-concrete beams are heavier to transport and erect than steel beams, and require more care in handling. A prestressed-concrete beam can be destroyed if it is not maintained in an upright position.

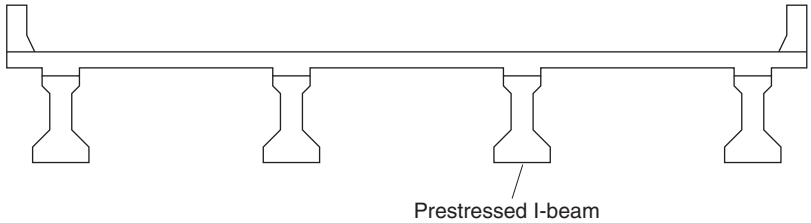

FIGURE 4.7 Cross-section of prestressed-concrete I-beam bridge.

www.EngineeringEBooksPdf.com

I-beams may be standard AASHTO-PCI sections or conform to individual state standards. Depth varies from 28 in (711 mm) for the little-used AASHTO type I to 72 in (1828 mm) for the AASHTO type VI and BT-72 (1828 mm) bulb-tee. The basic difference between the AASHTO type V and type VI beams and the bulb-tee beams, all of which have 3.5-ft-wide (1067-mm) top flanges, is that the bulb-tees have a thinner web (6 in instead of 8 in or 152 mm instead of 203 mm) and shallower top and bottom flanges. The bulb-tees have a flatter slope on the top of the bottom flange, as well. A variant of both is the modified AASHTO type VI, which uses the side forms for the AASHTO type VI beam but only a 6-in (152-mm) web. Individual analysis will determine which shape is best, but only shapes that are available from local precasters should be investigated unless the project is large enough to economically justify the purchase of special forms. Sometimes, bulb-tee sections are modified to have deeper web sections to increase their capacity, hence the span length.

As with prestressed-concrete box-beam bridges, the prestressing strands may include deflected or debonded strands. When strands are deflected and a number of beams are cast in line on a casting bed, resulting in many hold-down or hold-up points, stressing procedures should be used and verified that limit the maximum prestress loss due to friction to the amount permitted by specifications.

For very long bridges with repetitive spans over water, and where there is a precasting plant at a site from which the bridge units can be delivered by barge, the option of precast deck units consisting of the beams, diaphragms, and deck slab cast monolithically should be considered.

4.16.4 Steel-Beam Bridge

The steel-beam bridge uses rolled steel beams as shown in Fig. 4.8. Beam depths of 44, 40, and 36 in (1118, 1016, and 914 mm) are available, as well as shallower sections. Check with producers on current availability of the deeper sections from domestic sources because federal law applicable to federally aided projects, as well as many state laws, prohibits the use of foreign steel.

Steel beams may be made continuous by welding or bolting sections in the field. In the past, some states made welded connections at the piers, and currently at least

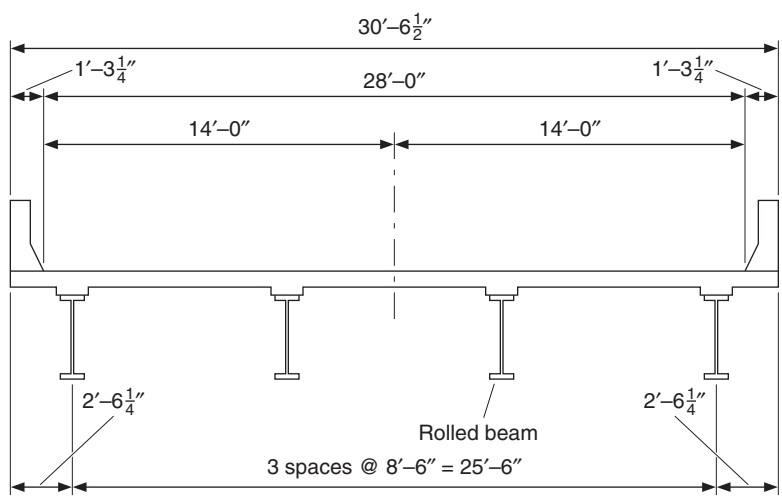

FIGURE 4.8 Cross-section of bridge with rolled steel beams. Conversions: 1 in = 25.4 mm, 1 ft = 0.305 m.

www.EngineeringEBooksPdf.com

one state makes welded connections at contraflexure points, supporting the field sections temporarily and providing enclosures to shield the joint from wind. More commonly, field sections are spliced by high-strength bolts, using web-and-flange splice plates. Bolts may be installed using calibrated wrenches, by the turn-of-nut method, or by use of tension-indicating washers, depending on what the designer allows and what the erector prefers to use. With all methods of bolting, it is important to use a procedure and sequence of bolting that will compact the joint and prevent a bolt initially adequately tightened from losing tension when subsequent bolts in the joint are tightened. Fasteners are generally ASTM A325 or A490 high-strength bolts.

To increase the span capacity of a rolled beam, or to permit a lighter beam to be used, cover plates may be added above the top flange and below the bottom flange in regions of high bending stress due to both positive and negative moments. The fatigue strength at the end of the cover plates, which is generally at a point of low maximum stress but high stress range, is much less than the fatigue strength of the unplated beam. Allowable fatigue stresses must not be exceeded, and this consideration may favor an unplated beam. However, an improved detail is available that uses bolts at the end of the plate, and the fatigue strength is somewhat higher. New Jersey DOT requires full-length cover plates, with termination about 2 ft (610 mm) from the end of the beam where the stress range is very small.

4.16.5 Welded Steel Plate Girder Bridge

The welded steel plate girder bridge (Fig. 4.9) extends the span range of deck-type bridges (bridges having all the structural support below the deck slab) well beyond the range of rolled steel beams or precast prestressed-concrete beams.

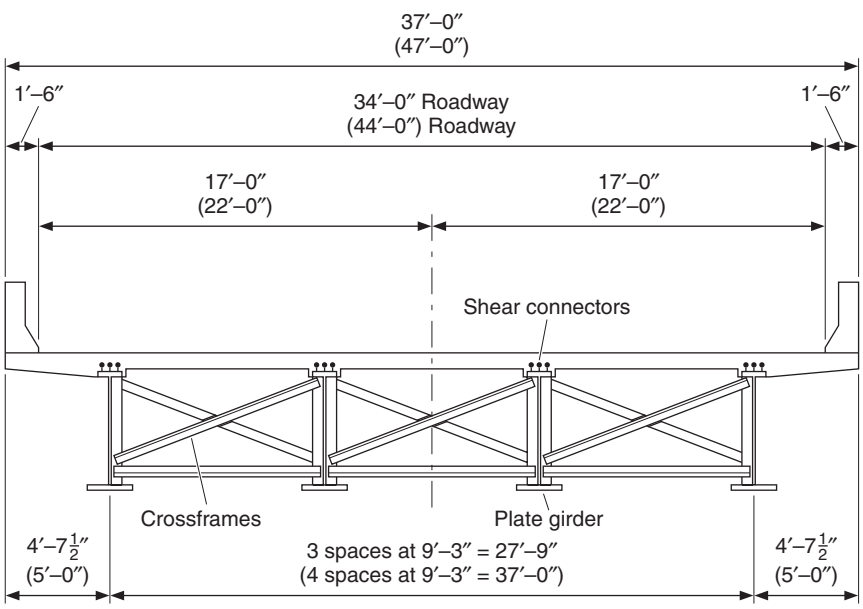

FIGURE 4.9 Cross-section of bridge with steel plate girders. Conversions: 1 in = 25.4 mm, 1 ft = 0.305 m.

www.EngineeringEBooksPdf.com

Whereas haunched girders were economical in the past for long spans, the current practice, strongly advocated by the steel-fabricating industry, is to use parallel-flange girders wherever possible. This is an economic consideration rather than an aesthetic one. Properly configured haunched girders are thought by many to be more pleasing. They permit a shallower structure depth at mid span, which can result in a lower grade line and consequent savings in roadway construction cost. However, parallel-flange girders can be fabricated more rapidly and economically than haunched girders. As an example of long-span parallel-flange steel girder construction, the Tennessee DOT has designed a continuous 1717-ft-long (523-m) parallel-flange five-span steel plate girder bridge of girder-floor beam-stringer type construction, including two spans of 460 ft (140 m) each. This design uses ASTM A36 and A572 steel in the webs, and A572 and A517 steel in the flanges. The A517 steel, which has a minimum yield strength of 100 kip/in^2 (690 MPa), is used for the flange plates at points of maximum stress over the piers and at mid span of one of the 460-ft (523-m) spans.

In designing a steel plate girder bridge for economy, designing for minimum weight does not always result in the most economical girder. The cost saved by reducing web or flange plate width or thickness may be more than offset by the cost of making the welded splices. Cost data should be obtained from local fabricators to make this comparison. One rule of thumb is that the weight saved by a change of flange plate thickness should be at least 1500 lb (680 kg). Also, it is generally desirable to use a constant-width flange plate to reduce fabrication and construction costs.

The use of excessively thin webs and narrow flanges, while saving weight, can result in flimsy sections that require special handling and erection equipment such as strongbacks. If such measures are not employed, the girder may be damaged in handling. Either consequence may more than offset the cost saved through weight reduction. For this reason many states have adopted minimum plate dimensions that are greater than minimum requirements of AASHTO or industry recommendations.

4.16.6 Composite Construction for Steel Beam and Plate Girder Bridge

The concrete deck for steel beam and girder bridges may be designed and constructed on the basis of either composite or noncomposite behavior. With composite construction, the effective area of the slab can be calculated and used in determining the moment resistance of the section in positive moment regions. In negative moment regions, tensile stresses can be resisted by the reinforcing steel. The required number of shear connectors must be calculated and furnished. These are generally headed studs that are welded to the top flange (Fig. 4.9). Overall economy depends upon the cost of the installed shear connectors and the reduction in steel weight that can be obtained. However, composite construction is frequently the economical choice.

4.16.7 Economical Design of Steel Plate Girder Bridge

Suggestions for maximum economy of steel girder bridges may be summarized as follows*:

1. Load-and-resistance factor design (LRFD) is the preferred design procedure. Load-factor design (LFD) yields more economical girder designs than does allowable-stress design (ASD).

*From R. L. Brockenbrough and F. S. Merritt (eds.), *Structural Steel Designer's Handbook,* 4th ed., McGraw-Hill, New York, 2006. Used with permission.

www.EngineeringEBooksPdf.com

2. Properly designed for their environment, unpainted weathering-steel bridges are more economical in the long run than those requiring painting. Consider the following grades of weathering steels: ASTM A709 grade 50W, 70W, HPS70W, or 100W. Grade 50W is the most often used.
3. The most economical painted design is that for hybrid girders, using 36-kip/in^2 (248 MPa) and 50-kip/in^2 (345 MPa) steels. Painted homogenous girders of 50-kip/in^2 (345 MPa) steel are a close second. The most economical design with high-performance steel (HPS) will also be hybrid, utilizing grade 50W steel for all stiffeners, diaphragm members, and web and flanges, where grade 70W strength is not required. Rolled sections (angles, channels, etc.) are not available in HPS grades.
4. The fewer the girders, the greater the economy. Girder spacing must be compatible with deck design, but sometimes other factors, such as maintaining traffic during a future deck replacement, govern selection of girder spacing. For economy, girder spacing should be 10 ft (3 m) or more.
5. Transverse web stiffeners, except those serving as diaphragm or cross-frame connections, should be placed on only one side of a web.
6. Web depth may be several inches larger or smaller than the optimum without significant cost penalty.
7. A plate girder with a nominally stiffened web—1/16 in (1.6 mm) thinner than an unstiffened web—will be the least costly or very close to it. (Unstiffened webs are generally the most cost-effective for web depths less than 52 in (1320 mm). Nominally stiffened webs are most economical in the 52- to 72-in (1320- to 1830-mm) range. For greater depths, fully stiffened webs may be the most cost-effective.)
8. Web thickness should be changed only where splices occur. (Use standard-plate-thickness increments of 1/16 in (1.6 mm) for plates up to 2 in (51 mm) thick and 1/8-in (3.2-mm) increments for plates over 2 in (51 mm) thick.)
9. Longitudinal stiffeners should be considered for plate girders only for spans over 300 ft (92 m).
10. Not more than three plates should be butt-spliced to form the flanges of field sections up to 130 ft (40 m) long. In some cases, it is advisable to extend a single flange-plate size the full length of a field section.
11. To justify a welded flange splice, about 700 lb (318 kg) of flange steel would have to be eliminated. However, quenched-and-tempered plates are limited to 50-ft (15-m) lengths.
12. A constant flange width should be used between flange field splices. [Flange widths should be selected in 1-in (25-mm) increments.]
13. For most conventional cross sections, haunched girders are not advantageous for spans under 400 ft (122 m).
14. Bottom lateral bracing should be omitted where permitted by AASHTO specifications. Omit intermediate cross-frames where permitted by AASHTO, but indicate on the plans where temporary bracing will be required for girder stability during erection and deck placement. Space permanent intermediate cross frames, if required, at the maximum spacing consistent with final loading conditions.
15. Elastomeric bearings are preferable to custom-fabricated steel bearings.
16. Composite construction may be advantageous in negative moment regions of composite girders.

Designers should bear in mind that such techniques as finite-element analysis, use of high-strength steels, and load-and-resistance-factor design often lead to better designs.

www.EngineeringEBooksPdf.com

Consideration should be given to use of 40-in-deep (1016-mm) and 44-in-deep (1118-mm) rolled sections. These may be cost-effective alternatives to welded girders for spans up to 100 ft (30 m) or longer. Economy with these beams may be improved with end-bolted cover-plate details. Equally important is the availability of material, either in the form of rolled beams or plates. Long-lead items may cause schedule delays and contractor claims, which increase the cost of construction. Contract documents that allow either rolled beams or welded girders ensure cost-effective alternatives for owners.

With fabricated girders, designers should ensure that flanges are wide enough to provide lateral stability for the girders during fabrication and erection. Flange width should be at least 12 in (305 mm), but possibly even greater for deeper girders. The AISC recommends that, for shipping, handling, and erection, the ratio of length to width of compression flanges should be about 85 or less.

Designers also should avoid specifying thin flanges that make fabrication difficult. A thin flange is subject to excessive warping during welding of a web to the flange. To reduce warping, a flange should be at least 3/4 in (19 mm) thick.

To minimize fabrication and deck-forming costs when changes in the area of the top flange are required, the width should be held constant and required changes made by thickness transitions.

To get cost-effective results from the many different designs of fabricated girders that can satisfy the requirements of specifications, designers should obtain advice from fabricators and contractors whenever possible.

4.16.8 Beam and Girder Spacing for Steel Beam and Plate Girder Bridge

In regard to efficiency in the number of lines of girders in bridges consisting of multiple girders connected by cross frames, cursory cost comparisons almost always conclude that the widest spacing of girders is the most economical. Savings result not only from the reduced number of main members but also from the reduced number of secondary elements (shear connectors, cross frames, stiffeners, and bearings). However, other costs must be considered. Wide girder spacing will generally be accompanied by a wide slab overhang over the outside girders, for a balance of load on interior and exterior girders. This may necessitate extra reinforcing steel in the top of the deck slab beyond the amount required for the slab span between girders, and may require a thicker slab. Use of three lines rather than four or more puts the bridge closer to a nonredundant condition. In some cases, a greater number of girders than the optimum for minimum material cost may be necessary or desirable to permit the bridge to be built in stages, or to have the deck replaced while maintaining traffic on a portion of the deck width. In general, beam and girder spacings of up to 10.0 or 12.5 ft (3 or 4 m) should be investigated for typical bridges. For economy, the size of interior and exterior stringers should be the same.

4.16.9 Welded Steel Box Girder Bridge

The steel box girder bridge is depicted in Fig. 4.10. The steel elements are fabricated and erected as "tubs," and the composite concrete deck is placed in the field. This configuration has some advantages over plate girder construction. Visually, it is "cleaner," and it does not provide surfaces for birds to perch. For high-visibility bridges, such as urban interchange bridges where motorists are constantly passing beneath the bridge, the enhanced appearance may be a deciding factor. Also, the cleaner surface areas tend to improve durability and reduce repainting costs. The bridge is torsionally stiff—especially

www.EngineeringEBooksPdf.com

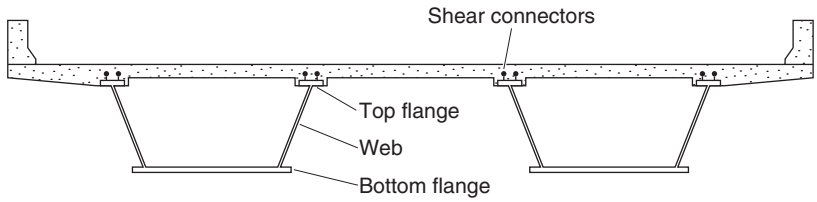

FIGURE 4.10 Cross-section of bridge with steel box girders.

beneficial for horizontally curved bridges. These advantages come at a price, however, because box girder bridges are generally more expensive than plate girder bridges. Sometimes the extra cost is knowingly borne for the aesthetic advantage.

4.17 DETERMINATION OF SPAN LENGTHS

Where the spans are not controlled by features crossed—such as roads, railroads, streams, or existing buildings—and there is freedom to locate piers, the lengths of spans will be controlled by aesthetic, economic, and structural requirements. Generally, from an aesthetic standpoint, spans should have a length at least 3 or 4 times the pier height.

The profile of the site crossed will influence the span proportions. On the uphill end of a crossed hillside, the end spans will be shorter than at the bottom of the valley. The type of bridge will also affect the selection of span ratios, from both aesthetic and structural standpoints. Where spans are continuous, the end span should not be made too short, because uplift may occur under live load, and loss of positive reaction at the abutment will occur sooner if the abutment settles.

The most economical bridge will generally not be either the one with the most economical superstructure or the one with the most economical substructure, but the one with the least combined cost. That determination is made by performing a cost study wherein a number of different span lengths are investigated, along with the cost of their substructures. To be meaningful, the superstructure and substructure designs should be fairly detailed. The superstructure and substructure costs are then plotted. The optimum span length will be at the low point of the combined cost curve. A typical cost study curve is shown in Fig. 4.11.

4.18 BRIDGE WIDENING AND REHABILITATION

Shoulders were not always provided on bridges in the past. This in itself can be a reason for widening an existing bridge. More frequently, widening is necessitated by the addition of lanes to the highway, at which time a full shoulder can be provided.

The design and preparation of plans for bridge widening usually require all the same elements as the preparation of the original plans for the structure, plus details and notes for partial removal of the existing bridge, rebar splice details, and notes on sequence of construction and maintenance of traffic. Therefore, it is a mistake to think of such a design project as "just a widening job" when estimating the hours required to design and prepare plans, or when reviewing such estimates for agency approval.

Bridges are generally widened in kind—that is, steel-beam bridges are widened with additional steel beams, prestressed-concrete beam bridges are widened using prestressed-concrete beams, etc. However, beam types different from the original have been used successfully in some widening projects.

www.EngineeringEBooksPdf.com

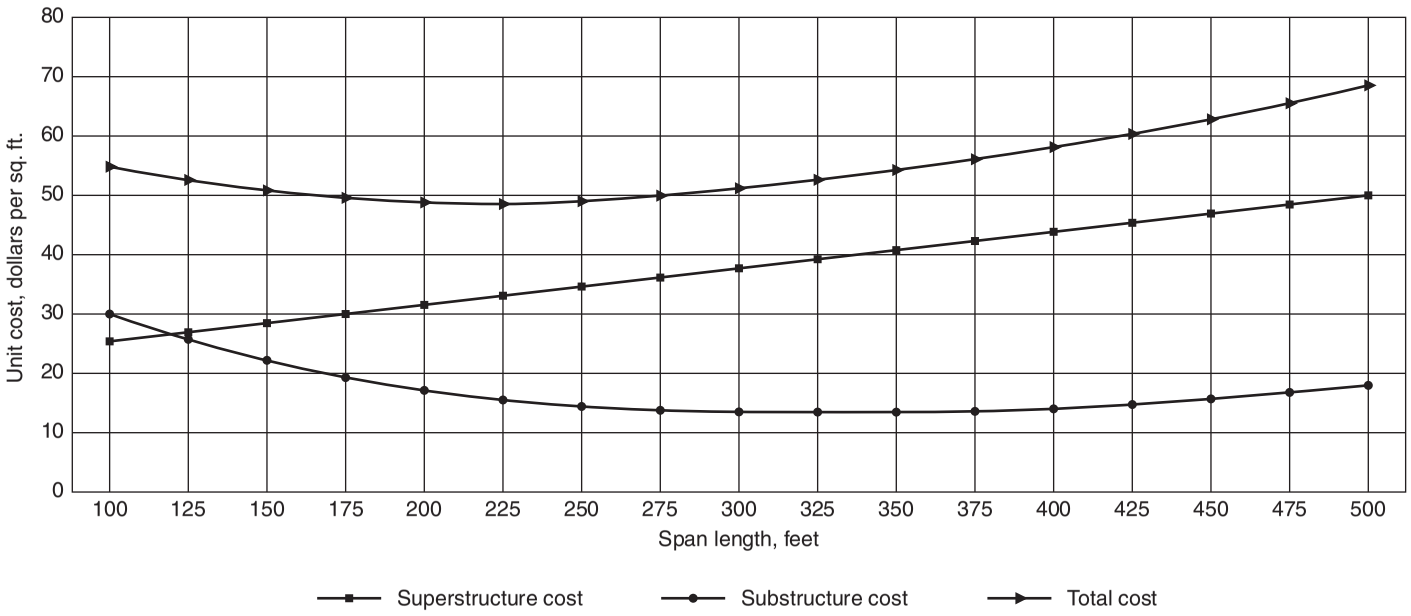

FIGURE 4.11 Example of cost study for optimum span length. Conversions: 1 ft = 0.305 m, 1 sq.ft = 0.0929 m^2.

www.EngineeringEBooksPdf.com

It is sometimes possible to increase the design load capacity of a bridge when widening. If the bridge is steel and was originally designed and constructed noncompositely, it may be feasible to weld shear studs onto the top flange of the beam or girder if the deck slab must also be replaced. If the deck slab is good, another available technique is to carefully core holes in the slab over the beams, weld shear studs onto the beam flange, and fill the hole with high-strength concrete, thereby making the beam composite. One should always be cognizant of the effect of retrofits on fatigue life, just as one is conscious of the fatigue effect of structural details on new construction.

Another means of increasing load capacity is to space the existing beams closer together. Before this is done, a study should compare the cost of renovation with the cost of replacement with a new superstructure.

Posttensioning of members can also be used to increase the load capacity of existing bridges, or to correct deficiencies in the original design. External posttensioning of prestressed or posttensioned girders has been necessary on some bridges where the design did not adequately anticipate the magnitude of time-dependent deflections that occurred. In one case, a utility bridge developed a sag that trapped rainwater, further increasing the deflection. It was corrected by external posttensioning. Members of truss bridges can be posttensioned to increase the load capacity of the truss. A computer program is available from the BEST Center, University of Maryland, which allows analysis including the effect of posttensioning cables.

When determining the load capacity of an existing bridge, one should refer to the original plans, if available. These plans will generally state the design specifications used and the type and required strength of materials. For steel bridges for which plans are not available but the year of construction is known, the type of steel and the allowable stress may be obtained by reference to the AASHTO *Manual for Maintenance Inspection of Bridges.* If the bridge is a large or significant one, the type and strength of the steel should be determined by chemical and physical analysis performed on a coupon taken from the bridge. The chemistry, particularly the carbon equivalent, will be important if welding is proposed on the existing steel.

When evaluating the strength of an existing bridge for widening or rehabilitation, reference should be made to AASHTO publications dealing with evaluation and rating for strength and fatigue. Two such publications are the AASHTO *Guide Specifications for Fatigue Evaluation of Existing Steel Bridges* and the AASHTO *Guide Specifications for Strength Evaluation of Existing Steel and Concrete Bridges. Manual for Condition Evaluation of Bridges* and *Guide Manual for Condition Evaluation and Load and Resistance Factor Rating (LRFR) of Highway Bridges* are also available through AASHTO.

Evaluation of an existing prestressed-concrete girder bridge for which plans are not available may be more difficult. The type of girder, whether a standard AASHTO shape or a state standard, may be determined by measurement. The number and size of strands may be apparent at an exposed end, but whether any strands are deflected or debonded, whether the strands are stress-relieved or low-relaxation, and what their strength is are not easily determined. Full-scale load-deflection testing may provide some answers, but is very expensive. This illustrates the importance of maintaining and safeguarding the original plans and as-built drawings, and having complete design data on those plans.

4.19 REPAINTING OF EXISTING BRIDGES

Repainting of bridges over highways or railroads may necessitate use of protective covers, or require traffic lanes to be diverted or work interrupted during passage of trains, while existing paint is removed and new paint applied. These factors all favor use

www.EngineeringEBooksPdf.com

of a bridge material or protection system that does not require maintenance reapplication of a coating. (See Art. 4.13.)

Removal of Existing Paint. Complete removal of the existing paint on a bridge that is to be recoated with a paint system that requires it can be extremely expensive, particularly if the existing paint contains lead. Lead-based paints were used extensively in the past because they provided good protection. Because of the health issue involved, portions of bridges where lead-based paints are being removed are often required to be completely enclosed, and the paint particles contained and properly disposed of, often at great cost. Severe monetary penalties can be imposed if violations occur. (See Art. 1.4.)

Repainting. Maintenance paint should be applied with the same care as paint on new bridges, but it must be applied in a more difficult environment. Painting must be done under acceptable atmospheric and environmental conditions, particularly in regard to temperature, humidity, wind, and absence of dirt. Overspray onto vehicles and other objects must be prevented. Some painting contractors are consciously careless about this, preferring to take their chances and let their insurance company pay claims, rather than taking necessary precautions. This results in bad public relations between travelers and the owner.

Because of the cost associated with complete removal of existing paint, paint systems that do not require complete removal, but only removal of loose paint and minimal preparation of sound paint and exposed steel, are much desired. Some such systems are on the market. While longevity can be projected by accelerated testing, only real-time exposure will truly prove their worth.

Inspection. Thorough inspection during repainting contracts is essential to satisfactory performance. Painting contractors often work during off-hours, and so the owner's inspectors should be prepared to work those same hours. Inspectors should follow closely behind the painters. On high bridges, the use of inspection devices such as high lifts, Reach-Alls, Snoopers, or cherry pickers, which permit inspectors to reach areas otherwise not readily accessible, will keep the painters on their toes just through awareness of their availability to the inspector.

4.20 DECK DRAINAGE

Adequate drainage of the deck is important for safe operation during rainstorms, to prevent accumulation of rainwater or snowmelt that could freeze and cause skidding, and to prolong the life of the deck by removing standing water, which would otherwise contribute the water element necessary for corrosion. Transverse drainage of the deck should be provided by cross-slope whereas zero gradients and sag curves on bridges should be avoided.

Design of the drainage system is frequently one of the last items listed in the scope of services for a bridge design project. This implies a secondary importance, but that is certainly not the case. On the contrary, the South Carolina DOT requires that scuppers of adequate size and spacing for high-intensity rainfall be shown in the preliminary bridge plan view. The DOT reviewers check the scupper design as part of the preliminary design review. This is the stage when deck drains should be designed. At this stage changes as major as span layout revision can be made with relative ease to ensure adequate drainage, including provision for longitudinal conductors with acceptable slopes, and downspouts, if necessary.

Scupper Size and Shape. Bridge scuppers are unlike roadway drains, which can have large grates through which the storm water flows and drops into a large sump and then

www.EngineeringEBooksPdf.com

is conducted away by transverse or longitudinal drain pipes. Bridge scupper outlet pipes generally must be small circular, square, or rectangular pipes, and so any enlargement of the scupper surface opening must be limited to prevent debris from being trapped, clogging the scupper and making it ineffective. A minimum surface opening larger than the diameter of a beverage can is desirable and should be maintained to the outlet end. Some states require the use of bicycle-safe grates on bridges where bicycle traffic is allowed. Bicycle-safe grates have smaller individual openings that would prevent catching of the tire but should provide the same overall opening area required by the drainage design. An open 4-in- (100-mm) or 6-in-diameter (150-mm) pipe meets this requirement and is economical compared with scuppers having large fabricated boxes with crossbars, so that more of them can be provided at the same cost. Where the discharge can be corrosive, such as where deicing salts are used, the pipe should extend below the bottom of an adjacent beam to prevent the discharge from being blown onto the beam. This is especially important on weathering steel bridges, and is also important on painted steel and concrete bridges. In areas that do not experience freezing, a formed opening in the deck may be acceptable, or the pipe need not extend below the beam. In this case one can expect a stain to develop on the beam onto which the discharge is blown. Some states prohibit drainage directly onto unpaved embankments or natural ground where erosion could undermine structural elements, or onto any traveled way, either vehicular or pedestrian.

Deck Drainage Criteria. Deck drainage design is based on preventing storm water from spreading in the gutter more than an acceptable amount during a rainfall of a given intensity. For example, the maximum permissible spread may be the width of the shoulder, or the spread may be permitted to extend across half of the outside lane of a multilane directional roadway. One source of such drainage design criteria is the U.S. Department of Transportation document "Drainage of Highway Pavements," Hydraulic Engineering Circular 12 (HEC 12).

Scupper Design Procedure. After the size of the scupper opening is established, the spacing may be determined. It's a common practice to locate the scuppers just ahead of the bridge joints to collect most of the runoff water therefore reducing the possibility of rainwater leaking through damaged bridge joints and causing deterioration in superstructure and substructure. In bridges with longer spans, rather than try to directly determine the spacing, it may be easier to select a trial spacing and then check the adequacy of that spacing by using a hydraulic analysis method acceptable to the client. The use of computer programs greatly expedites this task.

Collection of Runoff. In areas such as reservoirs and sensitive wetlands, it may be necessary to provide a collector system and temporarily detain the first half inch or inch of rainfall from each storm. It is assumed that the initial rainwater that falls at the beginning of a rainstorm will contain most of the roadway pollutants that can be carried away with the runoff. The objective is to prevent these pollutants, especially petrochemicals (crankcase drippings, fuel spills, etc.), from polluting the area under the bridge. The collected storm water is treated and then discharged. In some cases this protection is extended to the roadway as well.

4.21 BRIDGE BEARINGS

For concrete-slab bridges where expansion is not provided, the slab is normally supported directly on the substructure, concrete on concrete. A "centerline of bearing (singular)" is denoted on plans at each support. (Some states do not identify a

www.EngineeringEBooksPdf.com

centerline of bearing at the end bent of a slab bridge. Instead, they measure the end span to the end of the slab.)

In other types of bridges, individual bearings are used to support the superstructure. The centerline of these devices is denoted as the "centerline of bearings (plural)."

AASHTO requires that steel bridges with spans of 50 ft (15 m) or greater have a type of bearing employing a hinge, curved bearing plates, elastomeric pads, or pin arrangements for deflection (rotation) purposes. (This specification does not distinguish between simple and continuous spans. Presumably, it was written for simple spans, and so it would make sense that a span greater than 50 ft (15 m) be allowed for pier bearings not providing for rotation when spans are continuous.)

Bearings consist of some or all of the following components:

- Masonry plate resting on the substructure bridge seat
- Rotation device
- Sliding device
- Movement-restraining devices, or "keepers"
- Sole plate attached to the superstructure

Bearings may be fixed bearings, providing for rotation only and preventing differential movement between superstructure and substructure, or expansion bearings. Sliding expansion bearings have a finite capacity depending on the length of the contact surface, or may employ keepers to limit the movement. The range of movement accommodated by the bearing should be greater than the calculated movement.

The type of bearing is typically denoted on the elevation view of the general plan and elevation sheet in the project plans, using "E" for expansion and "F" for fixed.

The main types of bearings are

- Sliding plates
- Rockers and bolsters
- Pins
- Rollers
- Elastomeric bearings
- Disk bearings
- Pot bearings
- Seismic isolation bearings

Sliding Bearings. Sliding bearings will generally have a component made from a material that has a lower coefficient of friction than steel, and that is more corrosion-resistant. Bronze has been used in the past, but has not always maintained sliding capability over the life of the structure. When bearings "freeze," that is, lose their sliding capability, forces much greater than those anticipated in the design can be exerted on the substructure and ends of beams, doing great damage to both. To reduce friction and prolong the life span of bronze bearings, long-lasting lubrication can be forced under great pressure into trepanned rings on the surface of the bronze. These bearings are known by the brand name Lubrite.

Low friction can be achieved by use of polytetrafluoroethylene (PTFE) sheets mated with stainless steel. This combination is included in many current bearing types to provide for expansion, while other components are used to accommodate rotation. The TFE can be in solid sheet form or woven fabric. During shipping and storage at the job site, the assembly should be banded to prevent dirt from contaminating the sliding

www.EngineeringEBooksPdf.com

surface. The configuration of the bearing should be such that the sliding surface will not easily become dirty in service.

Rockers and Bolsters. Another means of allowing the superstructure to move, without sliding, is by use of rockers. Rockers, as the name implies, permit the superstructure to rock, like a person in a rocking chair, on the substructure. Rockers (Fig. 4.12*a*) consist of a masonry plate that is bolted to the concrete bridge seat; a rocker element, which is a heavy steel fabrication with a large-radius curved bottom surface and a small-radius semicircular convex pintle on top; and a sole plate, which has a mating concave surface. The height of the rocker is made proportional to the anticipated movement. Within the design range of movement, as the superstructure translates, the rocker tips, but the reaction

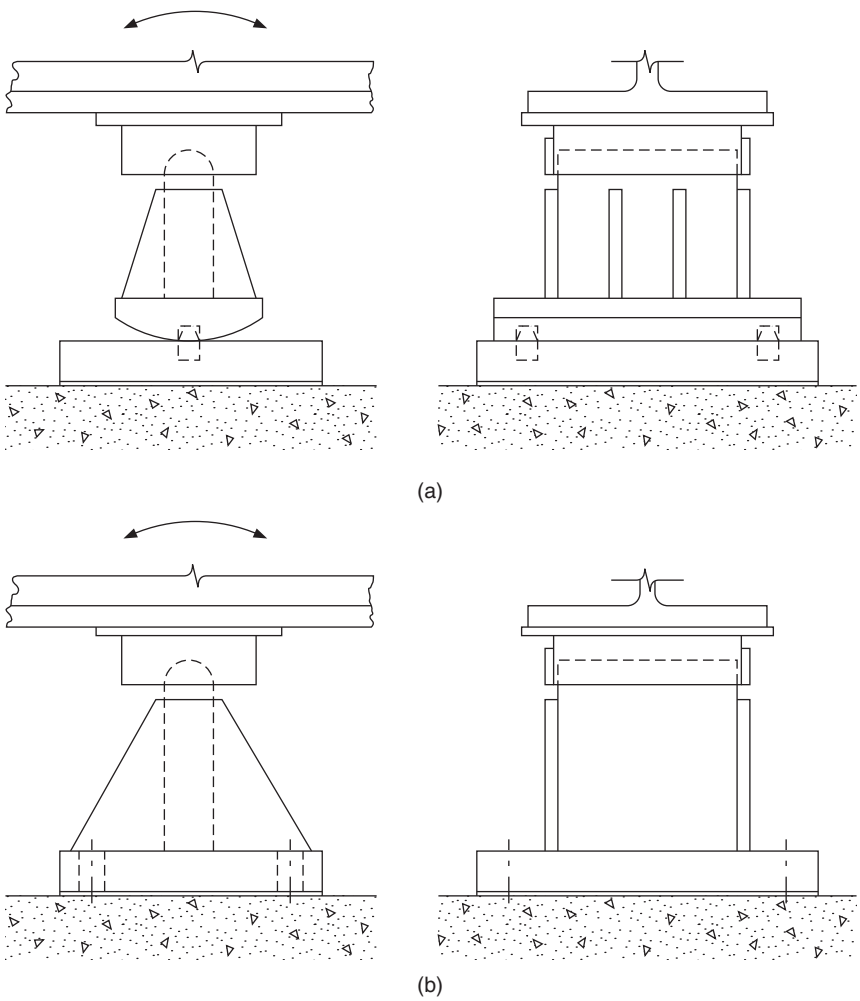

FIGURE 4.12 Bearings used in the past for structural steel showing (*a*) rocker (expansion) type and (*b*) bolster (fixed) type.

www.EngineeringEBooksPdf.com

to the base plate is maintained within the geometric limits of the rocker, so that the rocker does not tip over. To help prevent the rocker from tipping over, the space between the shoulder of the rocker and the bottom of the sole plate is limited, so that the assembly will bind as its capacity is reached.

Compared with sliding plates, rockers use more massive plates and are therefore less susceptible to severe corrosion and freezing. Because their inclination is readily visible, inspectors can easily determine whether they are functioning properly. Assuming that the rockers were properly installed to be vertical at a given average temperature, one can easily see whether they are inclined excessively or in the wrong direction. In cold weather, when the tops of the rockers should be tipped toward the center of the bridge, an opposite inclination indicates either that unexpected movement of the superstructure has occurred, or that the substructure has moved. Sliding plates can give similar indications, but they require closer observation.

Generally, when rockers are used for expansion bearings, bolsters are used for fixed bearings. The bolster (Fig. 4.12*b*) is a large steel fabrication consisting of a base plate, which is bolted to the concrete bridge seat; a pintle, which extends upward from the base plate and has at its top a machined convex semicircular shape that fits into a mating concave shape in the sole plate; and reinforcing plates on the sides of the pintle. These side plates are tapered, being wider at the base. This configuration of the mating surfaces allows the beam or girder to rotate, but fixes the superstructure against translation.

Rockers and bolsters, being taller than sliding plates, place the superstructure higher above the substructure. This is desirable for inspection and maintenance, including painting, and in fact is in line with AASHTO requirements that beams, girders, and trusses on masonry be so supported that the bottom flanges or chords will preferably be 6 in minimum above the bridge seat. However, if rockers or bolsters are tall and narrow, they may be aesthetically undesirable for overpass structures, giving the appearance of placing the superstructure on stilts. Because of their susceptibility to seismic loads and other problems, most states have discontinued use of steel bearings of this kind.

Pins. The pin bearing is used where a fixed condition is desired but rotation needs to be accommodated. As illustrated in Fig. 4.13, it consists simply of a masonry plate, a bottom plate welded to the masonry plate and machined to receive a pin, the pin, and a sole plate that is machined to bear on the pin. The pin is fabricated with shoulders to restrain it laterally within the plates. Clearance is provided between the ends of the plates and the inside faces of the shoulders to allow for lateral expansion of the bridge. For wide bridges, a greater clearance should be provided. A smooth finish is machined onto the pin and the mating surfaces. To prevent corrosion, all parts should be galvanized or metallized. Use of pin bearings, like rockers and bolsters, has widely been discontinued.

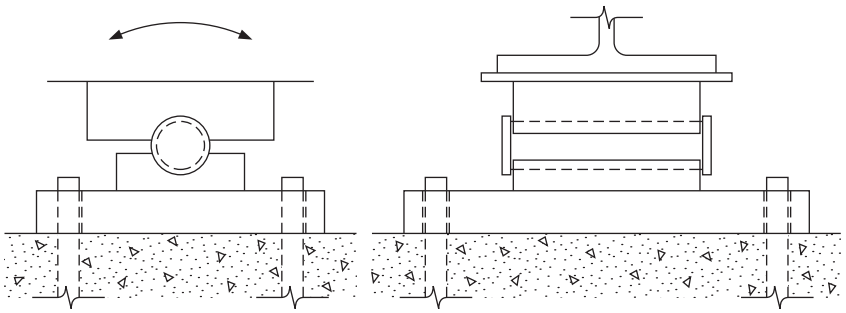

FIGURE 4.13 Fixed-pin bearing used in the past for structural steel.

www.EngineeringEBooksPdf.com

Rollers. For long-span bridges with large reactions, rollers have been used, sometimes in combination with a geared rocker mechanism that is used to transmit the superstructure reaction to the rollers. Several rollers are usually installed in a roller nest, which is a box having (1) a bottom plate, on which the rollers bear, (2) end plates, and (3) substantial side bars by which the relative position of the rollers is maintained. Grease is placed in the box, and a skirt is added to shield the rollers from water and dirt. Unfortunately, the measures taken to prevent corrosion have often not been successful, and the rollers end up being piles of rusted steel, with all expansion capability lost.

Elastomeric Bearings. The elastomeric bearing, in which superstructure translation can be accommodated by shear, is often the most economical type for both steel and concrete bridges. As shown in Fig. 4.14, this bearing consists of an elastomer such as natural or synthetic rubber (polychloroprene, or neoprene), with or without internal reinforcement, which may be steel plates or glass fiber fabric laminates. A steel-reinforced elastomeric bearing is cast as a unit in a mold and is bonded and vulcanized under heat and pressure; fabric-reinforced elastomeric bearings, popular in California, may be vulcanized in sheets and cut to size. Elastomeric bearings may have external steel load plates bonded to the upper or lower elastomer layer, or both. Natural rubber has better low-temperature properties than neoprene but is not as resistant to surface decay.

In addition to accommodating horizontal movement by deforming in shear, elastomeric bearings can accommodate superstructure rotation. AASHTO design specifications provide methods for properly designing elastomeric bearings, taking into account both translation and rotation requirements. Another desirable attribute of elastomeric bearings is that they can tolerate movements or rotations in directions other than longitudinal. This is not true of sliding plates, rockers and bolsters, and pin bearings. For structures with large skew or curvature, where it is known either qualitatively or quantitatively that such out-of-plane rotations exist, this is a desirable quality. Elastomeric bearings can be fixed bearings (shear prevented), in which case the allowable average compressive stress may be increased 10 percent over that permitted for bearings allowed to deform in shear. Shear is prevented by placing anchor bolts through holes in the bearing, the holes being only slightly larger than the anchor bolts. Steel reinforcement of elastomeric bearings is protected against corrosion by being contained in the elastomer. A minimum cover of 1/8 in is maintained at the edges of the bearing, except at laminate-restraining devices and around holes that are entirely closed in the finished structure.

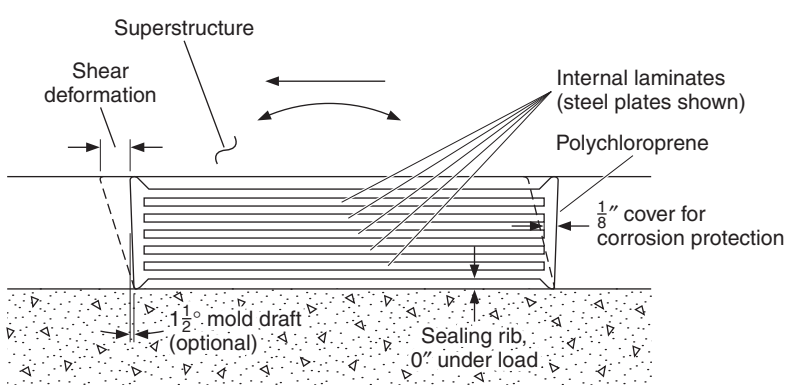

FIGURE 4.14 Elastomeric bearing for structural steel or concrete.

www.EngineeringEBooksPdf.com

Under load, elastomeric bearings will undergo a compressive deflection that is determined by the shape factor (loaded plan area divided by the perimeter area free to bulge) and the hardness of the elastomer. Where the dead load compressive strain is significant, allowance should be made for it when establishing bridge seat elevations. The compressibility of elastomeric bearings should also be considered in the design of expansion joints. Joints with overlapping steel elements should be avoided.

A significant shear force can be induced in an elastomeric bearing by movement of the superstructure. This force should be calculated and used in design of the substructure, taking into account also the flexibility of the substructure. For large-movement bearings, a tall and uneconomical elastomeric bearing would be required if the movement were taken entirely by shear. As an alternative, a sliding surface can be combined with an elastomeric bearing so that the bearing initially deforms in shear until the shear force exceeds the frictional resistance of the sliding surface, at which point the bearing slides.

Disk Bearings. Disk bearings are used where rotations occur in different planes. They consist of a polyether urethane disk confined by upper and lower steel bearing plates. Fixed-disk bearings provide for rotations in all directions but do not provide for longitudinal or transverse movements.

To permit expansion, a polytetrafluoroethylene to stainless steel sliding surface is provided above the upper bearing plate. Expansion disk bearings may be guided or nonguided. In a guided bearing, a guide bar or keyway system is used to restrict transverse movement, with the sliding surfaces being PTFE and stainless steel. Nonguided bearings allow rotation and longitudinal and transverse movement.

Pot Bearings. Pot bearings, like disk bearings, are used in curved or sharply skewed bridges or other complex structures where rotations occur in different planes. In a pot bearing, the rotational motion is accommodated by compression of elastomeric material in a shallow steel base cylinder, or pot. The load is transmitted to the elastomer through a circular plate or piston, which is part of the upper load plate and which is just slightly smaller in diameter than the inner circumference of the pot. The surface of the elastomeric rotational element is lubricated or has PTFE attached to it to facilitate rotation. Brass sealing rings are used between the steel piston and the elastomeric rotational element to prevent the elastomeric material from being squeezed out. This type of bearing is illustrated in Fig. 4.15. The elements of pot bearings that provide for

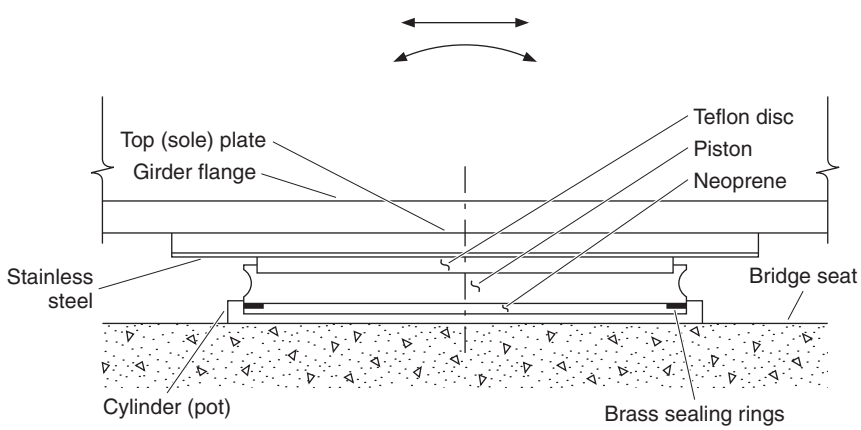

FIGURE 4.15 Pot bearing for structural steel or concrete.

www.EngineeringEBooksPdf.com

guided or nonguided expansion are like those described for disk bearings. As can be concluded from the discussion of disk and pot bearings, these devices require expensive machining and demand high-quality materials. They are therefore expensive and will not likely be used where other, less costly bearings can serve adequately.

Seismic Isolation Bearings. Sometimes referred to as base isolation bearings, they generally perform two principal functions, namely, motion isolation and restoring, to achieve seismic isolation by shifting the period of the structure or cutting-off the load transmission path to the structure. *Lead-core rubber bearings* are developed based on the energy-dissipating properties of lead coupled with high-damping properties of elastomer to dampen the seismic forces. In *friction pendulum systems*, a concave surface allows pendulum motion of the slider or a cylindrical roller of the bearing to lengthen the natural period of the structure to reduce the lateral forces acting on the substructure. Eradiquake™ bearings are another type of friction isolation bearings in which the restoring mechanism consists of cylindrical rubber or MER (mass energy regulator) springs. Springs are positioned in orthogonal directions within the walls of the bearing box and the PTFE/stainless bearing in the center, to help dissipating the energy generated during a seismic event.

4.22 PROVISION FOR INSPECTION OF NEW BRIDGES

In the design of a new bridge, provision must be made for maintenance inspection. For example, plate girders can be provided with safety handrails, safety railings can be specified on top of wide piers for inspectors to check bearings, and safety ladders can be installed to provide access to elements of the bridge otherwise difficult to reach. For deck-type bridges of moderate span and width, it will be possible to access the superstructure from special bridge inspection vehicles operating on the deck. For longer spans where the depth of girder exceeds the vertical capacity of a boom, and for wider bridges where the horizontal reach of the boom is not adequate, it may be necessary to provide catwalks or permanent movable inspection platforms. These devices are becoming increasingly popular as inspection and maintenance requirements are given the attention they deserve in the design process.

4.23 SCOUR

Stream scour can undermine bridge piers or abutments, resulting in collapse of spans and loss of life. Several such incidents, including collapses in Alabama, New York (Schoharie Creek bridge on the New York Thruway, 1987), and Tennessee, caused FHWA to mandate the evaluation of all highway bridges for scour vulnerability by 1997.

An insidious aspect of scour is that soil around a foundation can be removed and redeposited during a flood without leaving clear evidence that this has occurred, so that material may be present but may not provide the required support. Beyond surveying the stream bottom for local lowering of the flow line and inspecting around the pier by visual, manual, and remote means, current techniques for determining whether a loss of support has occurred are limited. They include physical probing and use of ground-penetrating radar.

Bridge scour evaluation requires input from hydraulic engineers as well as from structural and geotechnical engineers. Following the determination of a total scour prism, all three disciplines should be involved in providing structural stability.

www.EngineeringEBooksPdf.com

Scour Study. A scour study at an existing bridge will include some or all of the following:

- A channel bottom physical inspection
- A channel bottom topographic inspection
- A localized scour evaluation conducted around each substructure element
- Photographic or video recording of observations
- Hydraulic analysis
- Soils investigation including laboratory testing

Hydraulic Analysis. In the hydraulic analysis, depth of scour is calculated for 100-year and 500-year floods. Inclusion of the 500-year flood calculation reflects a change of thinking in regard to bridge hydraulics that has taken place in the last 20 or 30 years. Previously, it was thought acceptable to have a very small percentage of bridges wash out in a severe flood, and if this did not occur the hydraulic design requirements were considered excessive. The current thinking is that a complete washout should be avoided, even in very extreme floods because total cost of a bridge failure would be more than design for scour. A difficulty in implementing this policy, as in earthquake engineering, is that the hydrologic database has been developed over a relatively short period of time in the United States.

AASHTO LRFD specifications require the bridge foundations to be investigated for the following two conditions:

- 100-year design flood for scour or an overtopping flood of lesser recurrence interval at strength and service limit states
- 500-year check flood for scour or an overtopping flood of lesser recurrence interval at extreme event limit state

AASHTO *Model Drainage Manual* contains guidance on design procedures and computer software for hydrologic and hydraulic design.

A series of hydraulic analysis computer programs are available to assist in scour analysis. They include HEC-18, Evaluating Scour at Bridges; HEC-20, Stream Stability at Highway Structures; HEC-23, Bridge Scour and Stream Instability Countermeasures; HEC-RAS, River Analysis System; HY-8, Culvert Hydraulics Analysis; and FHWA's water surface modeling program, WSPRO. These programs are primarily for inland streams. In coastal areas, tidal velocities and hurricane surge velocities may also cause scour. To perform the hydraulic analyses for these conditions, it may be necessary to obtain data from the Federal Emergency Management Agency (FEMA) and the National Oceanic and Atmospheric Administration (NOAA) and to use other analysis techniques.

Soils Investigation. The objective of the soils investigation is to determine whether and to what degree the soils are subject to being eroded. Grain size is of particular interest.

Countermeasures. Where a potential for undermining is found, countermeasures will be required to ensure the stability of the bridge. Countermeasures include riprap, poured-concrete protective aprons with keyed edges, cabled-concrete sections, precast-concrete units, rock-filled basket mattresses, and protective piles or sheet-piling. In the case of new bridges, where more opportunities for preventing scour exist, some of the available options are a larger waterway opening that reduces stream velocity, location of piers out of the scour-vulnerable zone, use of deeper piles, and selection of a different pier shape.

www.EngineeringEBooksPdf.com

Design Information on Plans for New Bridges. Information from the scour analysis for a new bridge should be placed on the construction drawings so that a permanent record of scour estimates, and their effect on design, is readily available for future inspections and for improvement of this design process.

4.24 SEISMIC DESIGN

In recognition of the serious potential destructive effects of earthquakes, AASHTO specifications contain comprehensive provisions for seismic design. Although earlier specifications contained some provisions, the more comprehensive provisions were not adopted until the 1980s. They were based on a detailed study by consultants who were specialists in that field, with review and participation by bridge engineers and design firms. The standards developed apply to conventional steel and concrete girder and box girder construction with spans up to 500 ft, but do not cover suspension, cable-stayed, arch-type, and movable bridges.

Bridges and components designed to the AASHTO seismic provisions may suffer damage under severe seismic events, but should have a low probability of collapse due to ground shaking. The general philosophy adopted in the development was

- Small to moderate events should be resisted elastically without significant damage.
- Realistic seismic ground motion intensities should be used in design.
- Large events should not cause bridge collapse, and damage that occurs should be readily detectable and repairable.

Seismic performance categories are assigned on the basis of a ground acceleration coefficient for the site determined from a contour map of the United States, and an importance classification of "critical," "essential," or "other." Different degrees of design complexity are specified, depending on the seismic performance category. Each bridge is assigned to one of four seismic zones, and one of four different site coefficients is applied to approximate the effects of the site conditions (soil profile) on the response. Lateral forces and displacements may be determined from a single-mode spectral analysis, a multimode spectral analysis, or more rigorous procedures. Elastic response is assumed in the analysis, but forces are adjusted with response modification factors. The lateral forces are applied in orthogonal directions in combination to account for the directional uncertainty of earthquake motions. An important requirement specifies the minimum length of the bearing seat supporting the expansion ends of girders, determined as a function of the span length and the height of the supporting columns. Foundation design is also treated.

Seismic retrofit is a major consideration for older structures, particularly in the western United States. Serious distress and collapse of some bridges in California during the Loma Prieta (1989) and Northridge (1994) earthquakes received wide publicity. However, the problem structures were generally those designed and constructed to earlier standards. Where bridges were built according to modern methods, problems were minimal. Problems included failure of reinforced-concrete rigid-frame supports, failure of reinforced-concrete columns, columns punching through decks, and collapse of a structural steel span where the longitudinal displacement was excessive.

Active programs are in place to retrofit older structures to current criteria, but it is a massive undertaking that requires several years to accomplish. Some of the techniques being applied include (1) increasing the length of the seats for the bearings to provide a greater tolerance for longitudinal displacements, (2) adding cable restraints

www.EngineeringEBooksPdf.com

and hold-down devices at supports and hinges to restrict excessive movement and keep members in place, (3) adding spiral reinforcing steel and steel jackets or composite overwraps to strengthen concrete column piers, (4) replacing obsolete bearings with energy-dissipating types having lead cores or shock absorbers, and (5) adding foundation tie-down rods inserted into holes drilled into the soil. In the Northridge earthquake, several structures that had recently been retrofitted survived intact, giving confidence to the retrofit program. Retrofitting is not limited to the west but is under way in other parts of the United States as well.

www.EngineeringEBooksPdf.com

www.EngineeringEBooksPdf.com

CHAPTER 5

CULVERTS, DRAINAGE, AND REPLACEMENTS FOR BRIDGES*

Kevin E. White, P.E.
Principal Hydraulic Engineer
E. L. Robinson Engineering
Columbus, Ohio

A properly designed highway requires a well-designed drainage system. This requires a determination of the quantity of runoff reaching the drainage structures and an accurate analysis of water flow through the structures in order to properly size them. Also, a working knowledge of structural characteristics of buried pipe systems and effects of environmental factors is necessary to provide for long-term performance. Timely inspection and maintenance of drainage facilities will ensure satisfactory service life. If all of these issues are properly addressed, an efficient drainage system can be developed. Because a large percentage of highway funds is spent on culverts, storm drains, and other drainage facilities, it is incumbent upon the engineer to use funds wisely and create an efficient drainage system. Thus, the roadway and adjacent property will be protected without wasting taxpayers' money.

This chapter includes a review of fundamental hydrology considerations and runoff estimation, fundamentals of the hydraulics of open-channel flow, and design considerations and methods for the various components of highway drainage. The design, construction, and service life of both flexible and rigid pipe are addressed, as well as rehabilitation and maintenance. The range of products is broad, extending from small-diameter drainage pipe to long-span structures that may be used for the replacement of short-span bridges. Article 5.6 may be referred to for a general description of the major products available.

5.1 HYDROLOGY

The science of hydrology is concerned with the estimation of the intensity of rainfall, the distribution of the flow of the rainwater over the land, and the determination of the flow quantity (peak and total) that eventually reaches some specified point, the "point of solution."

*Revised and updated from "Culverts, Drainage, and Bridge Replacement" by Paul W. Cotter, P.E., Chap. 5 in the First Edition.

www.EngineeringEBooksPdf.com

Of primary concern to the highway engineer is the frequency of occurrence of the peak discharge. Although many methods for determining runoff have been proposed over the years, making an accurate prediction is difficult, because of the many and varying parameters that contribute to the complexity of the problem. These parameters include the affected drainage area, the rainfall intensity, the time of concentration of the rainfall, and the percent of the rainfall that will actually reach the point of solution. In addition to the difficulty in forecasting flows due to the inaccuracies in measuring and predicting the above parameters, different techniques that are commonly used to predict flows may produce significantly different results for a specific site and situation.

The objective of hydrologic analysis is to estimate the quantity of runoff for which a specific hydraulic structure must be designed. The magnitude of the study must be proportional to the risks involved. Those risks include the potential for damage to the roadway and adjacent property and the importance of the roadway in the transportation system.

5.1.1 Watershed Characteristics

Characteristics of the watershed area directly affect the hydrologic analysis. Basic features of the watershed basin include size, shape, slope, land use, soil type, storage, and orientation.

The size of the watershed basin is the most important characteristic affecting the determination of the total runoff. It is generally measured in acres, square miles, or square kilometers and is defined by the limits of the topographic divide. A *topographic divide* is a line that separates water flow between basins, thus causing the rainfall that falls on one or the other side to flow into a particular watershed. The location of this divide, and thus the perimeter of the basin, may be determined from aerial photographs, topographic maps available from the U.S. Geological Survey (USGS), and field surveys.

The shape of the watershed primarily affects the rate of water flow to the main channel. Because the rainfall in narrow watersheds reaches the main stream relatively quickly, a narrow basin generally has a low peak discharge compared with a fan- or pear-shaped basin of otherwise similar characteristics.

The main effect the slope has on water flow is on the time of concentration, or the time it takes the rainfall to flow from the farthest point in the watershed to the point under consideration. Everything else being equal, steeper slopes cause a shorter time of concentration, and thus a higher peak discharge, than do flatter slopes.

The use of the land and the type of surface the precipitation falls upon have an obvious impact on the flow of water. Developed areas covered by asphalt or concrete will allow a much greater percentage of the rainfall to flow to the point under deliberation than will an undeveloped vegetated area.

Peak flows may be reduced by the effective storage of drainage water. Of the three main types of storage—interception, depression, and detention—detention storage has the major impact in determining runoff. *Interception* refers to storage on aboveground fixtures such as plants, and *depression* refers to storage in depressions in the ground surface. Interception storage will eventually evaporate, and depression storage will either evaporate or infiltrate into the ground. *Detention* storage is runoff that is either in transit to the main channel or in storage in a pond, swamp, basin, or constructed detention chamber prior to transmission.

The final characteristic of the watershed basin is orientation. Taking into account the slope of the basin, if it is north- or south-facing, the runoff may be affected. If the basin accumulates snow and faces north, the snow may not melt until the late spring. If the snow melt is caused by a spring rain, the total runoff will be increased. On the other hand, if the basin faces south, the snow melt may come much earlier in the year, and with evaporation and infiltration, it may not contribute as greatly to the runoff. Basin orientation for small, steep basins also affects the peak rates of runoff. Where these basin types are in line with prevailing storm movements, the watershed responds with higher, shorter peak discharges.

www.EngineeringEBooksPdf.com

5.1.2 Flood Frequency

There are two accepted alternatives for determining the design flood frequency at a specific site: (1) by policy and (2) by economic assessment. An example of an establishment of a design flood frequency by policy is the Code of Federal Regulations, which specifies that the design flood for encroachment onto through lanes of interstate highways shall not be less than the 50-year discharge. Most state and local agencies have established guidelines for policy requirements of design flood frequencies. For example, whereas bridges are designed to convey a 50-year discharge with a specified freeboard and to convey the 100-year discharge with no freeboard, California has adopted the policy that culverts may be designed for a 10-year flood without headwater or to convey the base flood without damage to the facility or adjacent property. The base flood is defined as the flood or tide having a 1 percent chance of being exceeded in any given year, which is also defined as the 100-year flood. A design flood is a flood that will not inundate the highway—that is, will not cause the through lanes to be overtopped. An overtopping flood is a flood that will overtop the roadway, culvert, or bridge.

Blind adherence to the policy guideline to determine the design storm should be avoided. As a minimum, a range of peak flows should be considered and their potential effects on the traveling public, the potential damage to upstream and downstream properties, and the possibility of loss of life should be analyzed. This preliminary assessment will indicate whether the policy determination for the design flood frequency was applicable or whether further analysis is required. Additional studies could take the form of providing the greatest flood hazard avoidance at the least total expected cost, as recommended in Federal Highway Administration (FHWA) Hydraulic Design Series (HDS) 6, "River Engineering for Highway Encroachments."

5.1.3 Estimation of Runoff by Statistical Methods

Estimating the peak discharge for which highway drainage structures are to be designed is one of the most common problems and biggest challenges faced by the highway engineer. The problem may be separated into two categories: (1) watersheds for which historical runoff data are available, those with gauged sites, and (2) areas for which no data are available. Gauged sites lend themselves to analysis of runoff by statistical methods, whereas ungauged sites rely upon hydrologic equations based on the hydrologic and physiographic characteristics of the watershed.

The runoff data necessary to utilize statistical methods are available through the USGS, which is the primary collector of such data. Additional data sources are given in Chapter 3 of FHWA publication HDS 2 "Highway Hydrology." Provided that sufficient data are available for a specific site, a statistical analysis may be made that will result in a reasonable determination of the peak discharge. Water Resources Council Bulletin 17B, 1981, suggested that a minimum of 10 years of historic data are necessary to make an accurate estimation based on statistical methods. The USGS has no specific time requirements for historical hydrologic data collection. In the past, however, the recommended time period varied between 10 years for a 10-year design flood to 25 years for a 100-year design flood. HDS 2 should be referenced for different techniques available for determining the inferences of population characteristics from statistics.

Data collection can be categorized and arranged in groups that lend themselves to statistical analysis. The common groupings are by magnitude of peak annual discharge, by time of occurrence, and by geographic location. Of the three, magnitude of peak annual discharge is the most useful in determining peak discharge. Time of occurrence is the most useful in trend analysis or determining the effects of changing land use on runoff. Grouping by geographic location is the most useful when looking at sites that

www.EngineeringEBooksPdf.com

have insufficient flood data either because they are ungauged or because the historical time frame of the collected data is too short.

There are several standard frequency distributions that have been extensively studied in the statistical analysis of hydrologic data. Three of the most useful are (1) log-Pearson type III distribution, (2) lognormal distribution, and (3) Gumbel extreme value distribution. The log-Pearson type III distribution is popular largely because the distribution very often fits the available data closely and it is flexible enough to be used with many other types of distributions. Because of this flexibility, the U.S. Water Resources Council has recommended that it be used by all governmental agencies as the standard distribution for flood frequency studies. The characteristics of the lognormal distribution are the same as those of the classical normal or Gaussian mathematical distribution except that the flood flow at a specified frequency is replaced with its logarithm and has a positive skew. *Positive skew* means that the distribution is skewed toward the high flows or extreme values. The characteristics of the Gumbel extreme value distribution (also known as the *double exponential distribution* of extreme values) are that the mean flood occurs at the return period T_r of 2.33 years and that it has a positive skew.

If runoff data are unavailable for a specific watershed area, one method that may be used to determine the peak stream discharge is a *regional flood-frequency* analysis. By using historical runoff records from similar drainage basins in the immediate area, estimates of peak discharges may be developed. The USGS is continuously updating the methodology by which the agency performs regional flood-frequency analyses. Recent advances include the use of the "ordinary least squares" and "region of influence" methods for regionalizing historic stream flow data.

The statistical distributions commonly used for regional flood-frequency analysis result in an equation of the general form:

$$Y = aX_1^{b_1} X_2^{b_2} X_3^{b_3} \cdots X_n^{b_n} \tag{5.1}$$

where Y = dependent variable
a = intercept coefficient
$X_1, X_2, \ldots, X_n$ = independent variables
$b_1, b_2, \ldots, b_n$ = regression coefficients

In practice, the dependent variable is the estimated stream flow for a given return period. The intercept coefficient is a constant used to differentiate the regions used in the analysis and the required return periods. The independent variables are drainage basin characteristics such as drainage area, basin or channel slope, and types of land cover; meteorological characteristics such as annual rainfall; and channel characteristics such as cross-sectional area, active channel width and depth, and flood-plain width and depth.

It is important to note the limitations of regional flood-frequency analyses and the resulting regression equations. In general, independent variables should be determined using the same techniques as were used during the regression analyses. For example, if USGS 7.5-minute quadrangles were used to determine basin characteristics for the regression analysis, then basin characteristics should also be obtained from 7.5-minute quadrangles for peak discharge estimations.

5.1.4 Estimation of Runoff by Peak Flow Equations

Where there are no or insufficient stream-gauging records available, peak-flow methods such as the "rational method" and the Natural Resources Conservation Service (NRCS) method may be used. The *rational method* is the most common procedure for determining the quantity of flow for the design of minor hydraulic structures. Its use in the United States dates back to the late 1800s. One of the basic design assumptions for its use is that

www.EngineeringEBooksPdf.com

the rainfall intensity is uniform throughout the watershed. This assumption limits its use to relatively small watershed areas (in the neighborhood of 200 to 300 acres, or 1 km^2).

The rational method is based on the simple intensity-runoff equation

$$Q = KCiA \tag{5.2}$$

where Q = design discharge, ft^3/s (m^3/s)
C = runoff coefficient
i = average rainfall intensity, in/h (mm/h) for selected frequency and duration equal to time of concentration
A = drainage area, acres (km^2)
K = 1.0 for U.S. Customary units (0.278 for SI units)

After precipitation falls to the earth, it either is infiltrated into the earth, is evaporated back into the atmosphere, is subjected to depression or detention storage, or becomes runoff. The runoff coefficient C in Eq. (5.2) depicts the percent of precipitation that will run off the ground from the storm. Representative values of C for undeveloped and developed areas, respectively, are given in Tables 5.1 and 5.2. Also, if the watershed is made up of various surfaces, a weighted average should be used for C. This may be determined for surfaces with coefficients C_1, C_2, etc., and areas A_1, A_2, etc., as follows:

$$C = \frac{C_1A_1 + C_2A_2 + \cdots}{A_1 + A_2 + \cdots} \tag{5.3}$$

The intensity value i in Eq. (5.2) is dependent upon the time of concentration of the storm and the frequency of the design storm selected. Once these two parameters are selected, the rainfall intensity may be determined from an intensity-duration-frequency (IDF) curve. Such curves, which are derived from an accumulation of rainfall data recorded over the years, are available from both local and regional public agencies. (See, for example, U.S. Weather Bureau Technical Paper No. 25, "Rainfall Intensity-Duration-Frequency Curves for Selected Stations in the U.S.") A method for developing rainfall intensity curves and equations is shown in FHWA publication HEC 12, "Drainage of Highway Pavements." A typical IDF curve is shown in Fig. 5.1.

5.1.5 Estimation of Time of Concentration

The time of concentration or rainfall duration is equivalent to the length of time it takes for the runoff to travel from the most remote point of the watershed to the point of solution. This assumes that there is a uniform rate of rainfall over the entire watershed resulting in the maximum flow at the point being investigated. The total time of concentration is comprised of three distinct components: *overland flow time*, *shallow concentrated flow time*, and *concentrated flow time*.

Overland flow is thought to occur for no more than 300 ft (91 m) and perhaps even less. The overland flow time may be approximated by the curves in Fig 5.2. It is based on the following equation:

$$T_o = \frac{1.8(1.1 - C)(L)^{1/2}}{[S(100)]^{1/3}} \tag{5.4}$$

where T_o = overland flow travel time, min
C = runoff coefficient
L = overland travel distance, ft (m × 3.28)
S = slope

www.EngineeringEBooksPdf.com

TABLE 5.1 Runoff Coefficients for Undeveloped Areas

	Watershed type			
	Extreme	High	Normal	Low
Relief	0.28–0.35 Steep, rugged terrain with average slopes above 30%	0.20–0.28 Hilly, with average slopes of 10 to 30%	0.14–0.20 Rolling, with average slopes of 5 to 10%	0.08–0.14 Relatively flat land, with average slopes of 0 to 5%
Soil infiltration	0.12–0.16 No effective soil cover, either rock or thin soil mantle of negligible infiltration capacity	0.8–0.12 Slow to take up water, clay or shallow loam soils of low infiltration capacity, imperfectly or poorly drained	0.06–0.08 Normal; well-drained light or medium textured soils, sandy loams, silt and silt loams	0.04–0.06 High; deep sand or other soil that takes up water readily, very light well-drained soils
Vegetal cover	0.12–0.16 No effective plant cover, bare or very sparse cover	0.08–0.12 Poor to fair; clean cultivation crops, or poor natural cover, less than 20% of drainage area over good cover	0.06–0.08 Fair to good; about 50% of area in good grassland or woodland, not more than 50% of area in cultivated crops	0.04–0.06 Good to excellent; about 90% of drainage area in good grassland, woodland, or equivalent cover
Surface storage	0.10–0.12 Negligible surface depressions (few and shallow); drainageways steep and small, no marshes	0.08–0.10 Low; well-defined system of small drainageways; no ponds or marshes	0.06–0.08 Normal; considerable surface depression storage; lakes and pond marshes	0.04–0.06 High; surface storage, high; drainage system not sharply defined; large floodplain storage or large number of ponds or marshes

Given: An undeveloped watershed consisting of (1) rolling terrain with average slopes of 5%, (2) clay-type soils, (3) good grassland area, and (4) normal surface depressions.

Find: The runoff coefficient C for the above watershed.

Solution:

Relief	0.14
Soil infiltration	0.08
Vegetal cover	0.04
Surface storage	0.06
	$C = 0.32$

Source: From *Highway Design Manual,* California Department of Transportation, with permission.

www.EngineeringEBooksPdf.com

TABLE 5.2 Runoff Coefficients for Developed Areas

Type of drainage area	Runoff coefficient
Business:	
Downtown areas	0.70–0.95
Neighborhood areas	0.50–0.70
Residential:	
Single-family areas	0.30–0.50
Multiunits, detached	0.40–0.60
Multiunits, attached	0.60–0.75
Suburban	0.25–0.40
Apartment dwelling areas	0.50–0.70
Industrial:	
Light areas	0.50–0.80
Heavy areas	0.60–0.90
Parks, cemeteries	0.10–0.25
Playgrounds	0.20–0.40
Railroad yard areas	0.20–0.40
Unimproved areas	0.10–0.30
Lawns:	
Sandy soil, flat, 2%	0.05–0.10
Sandy soil, average 2–7%	0.10–0.15
Sandy soil, steep, 7%	0.15–0.20
Heavy soil, flat, 2%	0.13–0.17
Heavy soil, average, 2–7%	0.18–0.25
Heavy soil, steep, 7%	0.25–0.35
Streets:	
Asphaltic	0.70–0.95
Concrete	0.80–0.95
Brick	0.70–0.85
Drives and walks	0.75–0.85
Roofs	0.75–0.95

Source: From *Highway Design Manual,* California Department of Transportation, with permission.

The overland flow time can also be calculated by the *kinematic wave equation:*

$$T_o = \frac{K(L^{0.6})(n^{0.6})}{(i^{0.4})(S^{0.3})} \tag{5.5}$$

where T_o = overland flow travel time, min
K = 0.93 for U.S. Customary units (6.98 for SI units)
L = length of overland flow path, ft (m)
S = slope of overland flow
n = Manning's roughness coefficient
i = rainfall intensity, in/h (mm/h)

The solution of the kinematic wave equation is an iterative procedure since the overland flow time is a function of the rainfall intensity and the rainfall intensity is a function of the time of concentration.

www.EngineeringEBooksPdf.com

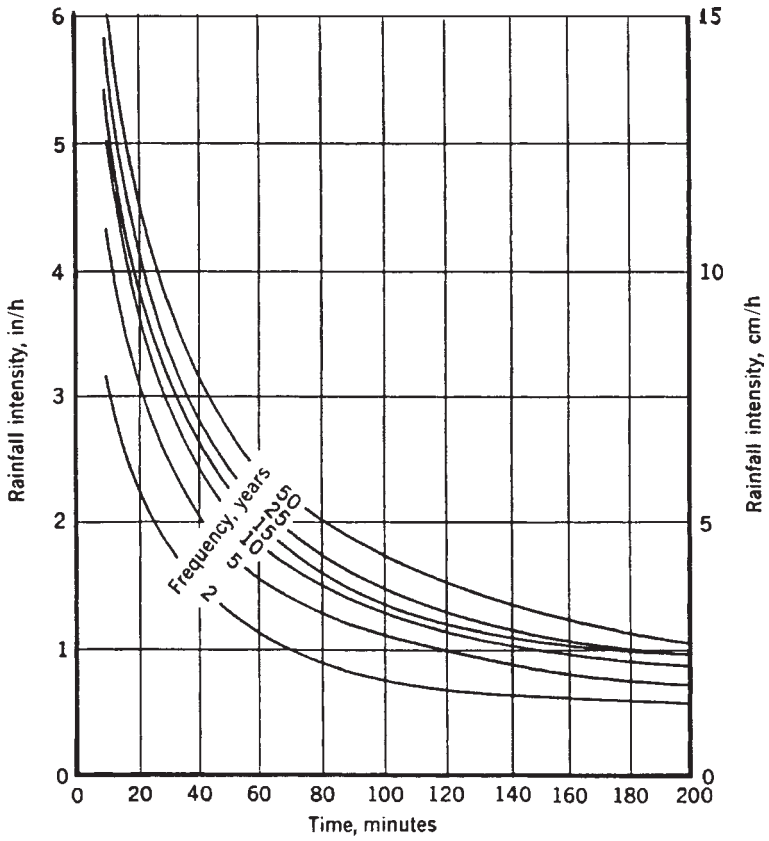

FIGURE 5.1 Typical rainfall intensity-duration-frequency curves. (*From* Design and Construction of Storm and Sanitary Sewers, *ASCE, 1986, with permission*)

Caution is urged in the application of this equation. Manning's roughness coefficient n varies with the depth of flow. Therefore, n values suitable for open-channel flow should not be used in the kinematic wave equation. Table 5.3 lists roughness coefficient values appropriate for use.

After 200 to 300 ft (61 to 91 m) of overland flow, water tends to concentrate into rills and gullies. This type of flow is termed *shallow concentrated flow*. The velocity of shallow concentrated flow can be estimated using the following relationship:

$$V = KC_k\sqrt{100S} \tag{5.6}$$

where V = velocity, ft/s (m/s)
K = 3.28 (1.0 in SI units)
C_k = intercept coefficient (see Table 5.4)
S = slope, ft/ft (m/m)

The final type of overland flow to investigate is flow that is captured in a stream, ditch, or closed conduit. This type of flow is referred to as *concentrated flow*.

www.EngineeringEBooksPdf.com

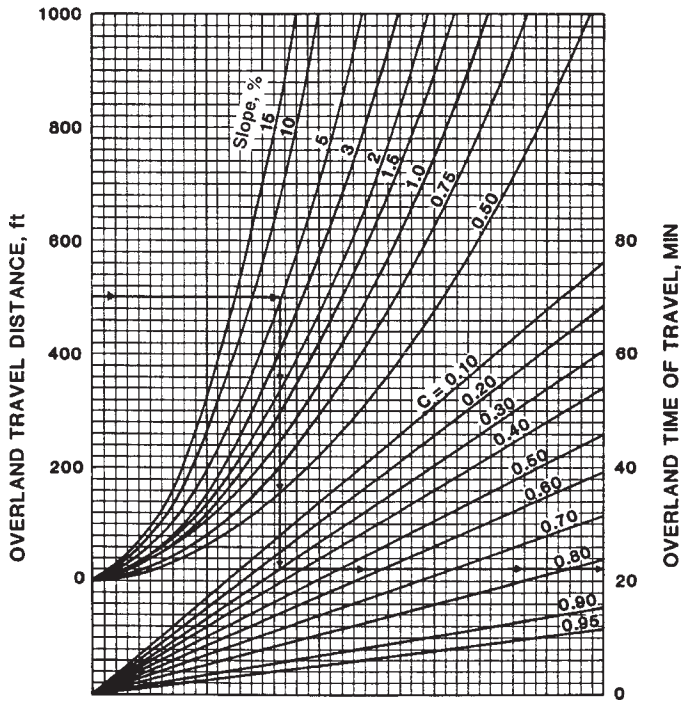

FIGURE 5.2 Overland time of concentration curves. Conversion: 1 ft = 0.3048 m. (*From* Highway Design Manual, *California Department of Transportation, with permission*)

Manning's equation is used to estimate the velocity of concentrated flow (see Art. 5.3.3). It should be noted that the use of Manning's equation is an iterative process and the assumed hydraulic radius must be checked for convergence.

The shallow concentrated flow time and the concentrated flow time can be determined by using the velocities obtained from the investigation of the shallow concentrated flow and the concentrated flow. The appropriate equation is as follows:

$$T_f = \frac{L}{60V} \tag{5.7}$$

where T_f = time of shallow concentrated flow or concentrated flow, min
L = overland length of flow, ft (m)
V = velocity, ft/s (m/s)

The total time of concentration is then the summation of the times of concentration for each of the distinct flow types.

As an alternative to the above procedure, where the channels are well defined and the overland flow is generally over bare ground, the total time of concentration may be estimated from the Kirpich equation*:

*Z. P. Kirpich, "Time of Concentration in Small Agricultural Watersheds," *Civil Engineering,* vol. 10, p. 362, 1940.

www.EngineeringEBooksPdf.com

TABLE 5.3 Manning's Roughness Coefficient, n, for Overland Sheet Flow

Surface description	n
Smooth asphalt	0.011
Smooth concrete	0.012
Ordinary concrete lining	0.013
Good wood	0.014
Brick with cement mortar	0.014
Vitrified clay	0.015
Cast iron	0.015
Corrugated metal pipe	0.024
Cement rubble surface	0.024
Fallow (no residue)	0.05
Cultivated soils	
Residue cover $\leq$ 20%	0.06
Residue cover $>$ 20%	0.17
Range (natural)	0.13
Grass	
Short grass prairie	0.15
Dense grasses	0.24
Bermuda grass	0.41
Woods*	
Light underbrush	0.40
Dense underbrush	0.80

*When selecting n, consider cover to a height of about 1 in. This is the only part of the plant cover that will obstruct sheet flow.

Source: From *Urban Drainage Design Manual,* HEC 22, FHWA, with permission.

$$T_c = K\left(\frac{L}{S^{0.5}}\right)^{0.77} \tag{5.8}$$

where T_c = time of concentration, min
K = 0.0078 for U.S. Customary units (3.97 for SI units)
L = maximum flow length, ft (km)
S = total slope = total change in elevation divided by L

The value of T_c should be multiplied by 2 where the surfaces are grassy, by 0.4 where they are asphalt or concrete, or 0.2 for concrete channels. (See *Modern Sewer Design,* AISI.)

The total time of concentration may also be calculated from the following modified form of the Williams equation*:

*The *modified* Williams equation is found in Maidment, cited below. The original Williams reference is G. B. Williams, "Flood Discharge and the Dimensions of Spillways in India," *The Engineer,* vol. 121, pp. 321–322, September 1922.

www.EngineeringEBooksPdf.com

TABLE 5.4 Intercept Coefficients

Types of surface	Intercept coefficient C_k
Forest with heavy ground litter	0.076
Min. tillage cultivated; woodland	0.152
Short grass pasture	0.213
Cultivated straight row	0.274
Poor grass; untilled	0.305
Grassed waterways	0.457
Unpaved area; bare soil	0.491
Paved area	0.619

Source: Adapted from *Location and Design Manual,* Vol. 2: *Drainage Design,* Ohio Department of Transportation, with permission.

$$T_c = KLA^{-0.1}S^{-0.2} \tag{5.9}$$

where T_c = time of concentration, min
K = 21.3 for U.S. Customary units (14.6 for SI units)
L = maximum flow length, mi (km)
A = total watershed area, mi^2 (km^2)
S = slope

A minimum time of concentration of 5 min is recommended by the FHWA. (See D. R. Maidment, *Handbook of Hydrology,* McGraw-Hill, 1993.)

Another common and simple method for determining the runoff is the NRCS method. The determination of the peak discharge is dependent upon the time of concentration, the cumulative rainfall, and the soil and cover classifications. (See the following from the NRCS: *National Engineering Handbook,* 1985; and "Urban Hydrology for Small Watersheds," TR-55, 1986.)

5.1.6 Computer Models

Many computer models have been developed for calculating rainfall runoff. Examples include the U.S. Army Corps of Engineers HEC-HMS model, the NRCS TR-20 model, and the FHWA-funded HYDRAIN system. As with all computer models, the accuracy and validity of the output can be only as accurate and valid as the input. The input and output data must be carefully inspected by a capable and practiced user to ensure valid results. (See D. R. Maidment, *Handbook of Hydrology,* McGraw-Hill, 1993; and *Highway Drainage Guidelines,* Vol. 2, AASHTO, 1999.)

Example: Time of Concentration, Rainfall Intensity, and Design Discharge. A grassy roadside channel runs 500 ft (152 m) from the crest of a hill. The area contributing to the flow is 324 ft (98 m) wide and is made up of 24 ft (7.3 m) of concrete pavement and 300 ft (91 m) of grassy backslope. The distance from the channel to the ridge of the drainage area is 200 ft (61 m). The channel has a grade of 0.4 percent, and the edge of the contributing area is 5 ft (1.5 m) above the channel. Determine the time of concentration, rainfall intensity, and design discharge based on a 10-year-frequency rainfall.

Assume the grassy backslope is similar to the watershed described by the example in Table 5.1 with C = 0.32. From Table 5.2, assume for the pavement C = 0.90. Then, from Eq. (5.3), the weighted average value of the runoff coefficient is

www.EngineeringEBooksPdf.com

$$\text{U.S. Customary units: } C = \frac{0.90 \times 24 + 0.32 \times 300}{24 + 300} = 0.36$$

$$\text{SI units: } C = \frac{0.90 \times 7.3 + 0.32 \times 91}{7.3 + 91} = 0.36$$

Separate the flow into overland flow and concentrated flow components for determining the time of concentration. For the overland flow time, proceed as follows.

The length of travel is 200 ft (61 m). The difference in elevation between the channel and the ridge of the drainage area is 5 ft (1.5 m). The slope is

$$\text{U.S. Customary units: } S = \frac{H}{L} = \frac{5}{200} = 0.025 \text{ or } 2.5\%$$

$$\text{SI units: } S = \frac{H}{L} = \frac{1.5}{61} = 0.025 \text{ or } 2.5\%$$

The overland flow is computed using Eq. (5.4):

$$\text{U.S. Customary units: } T_o = \frac{1.8\,(1.1 - 0.32)\,(200)^{1/2}}{2.5^{1/3}} = 14.6 \text{ min}$$

SI units: Same calculation, using $L = 61 \times 3.28 = 200$ ft

For the concentrated flow time, Manning's equation [Eq. (5.11) below] is used to determine the concentrated flow velocity. Manning's n value is taken from Table 5.6 and a hydraulic radius must be assumed.

$$\text{U.S. Customary units: } V = \frac{1.486}{0.027}\,(0.50)^{2/3}\,(0.004)^{1/2} = 2.2 \text{ ft/s}$$

$$\text{SI units: } V = (0.15)^{2/3}\,(0.004)^{1/2}/0.027 = 0.66 \text{ m/s}$$

Then the concentrated flow time is computed using Eq. (5.7):

$$\text{U.S. Customary units: } T = \frac{500}{60\,(2.2)} = 3.8 \text{ min}$$

$$\text{SI units: } T = \frac{152}{60\,(0.66)} = 3.8 \text{ min}$$

Therefore the total time of concentration is 14.6 min + 3.8 min or 18.4 min.

Now use Fig. 5.1 to get a 10-year rainfall intensity of 3.8 in/h (96 m/h). Using the rational method Eq. (5.2), the design discharge for the 3.7 acres (0.015 km^2) area is

$$\text{U.S. Customary units: } Q = 1 \times 0.36 \times 3.8 \times 3.7 = 5.1 \text{ ft}^3\text{/s}$$

$$\text{SI units: } Q = 0.278 \times 0.36 \times 96 \times 0.015 = 0.14 \text{ m}^3\text{/s}$$

The assumed hydraulic radius used in Manning's equation must be verified by using Eq. (5.11). Through trial and success, the depth of flow is determined to be 0.71 ft (0.22 m), and therefore the hydraulic radius is 0.48. The assumed value is close to this so the convergence is acceptable.

www.EngineeringEBooksPdf.com

5.2 DESIGN OF OPEN CHANNELS

As the name implies, open-channel flow is concerned with the conveyance of water with a free surface. This article primarily concerns lined and unlined channels such as encountered along roadways in highway design.

5.2.1 General Considerations

The parameters to consider in choice of channel cross-section include hydraulics, safety, maintenance, economics, and the environment. These considerations are usually so interdependent that optimizing one can have detrimental effects on the others. The hydraulic engineer's objective is to achieve a reasonable balance among the competing criteria.

Safety is always of primary concern to the highway engineer. If the channel is located far enough away from the traveled way, an adequate recovery zone may be available for vehicles accidentally leaving the roadway. Additionally, with regard to safety, a channel with flattened sideslopes and a curved transition to the bottom is preferred to allow time for recovery for the errant vehicle. (See Chap. 6, Safety Systems.)

Periodic maintenance is required for hydraulic channels regardless of the cross-sectional design chosen. Access should be planned and provided for maintenance personnel and equipment. The proliferation of sediment and debris and the growth of vegetation can cause erosion or reduction of the capacity of the channel. The channel design should balance the cost of preventing these restrictions against the anticipated increased costs of removing them as they accumulate.

The proposed channel location and shape affect the economics of the project. A channel located away from the traveled way may be safer for the traveling public and more aesthetically pleasing; however, these considerations must be balanced against the potential increase in right-of-way costs as well as other associated costs. The shape also affects the cost of the channel. A channel with vertical sidewalls will typically be more expensive than one with sloping sides; the vertical walls must not only maintain flow within the channel but must also be designed to retain the earth outside the channel.

Proposed channel improvements must take into account the possible effects the project will have with regard to erosion, sedimentation, water quality, aesthetics, and fish and wildlife. Local, state, and federal resources and flood control agencies have an interest in drainage improvements and environmental impacts and should be contacted early in the planning process for input, cooperation, and assistance. A partial list of these agencies may be found in the AASHTO *Highway Drainage Guidelines.*

The necessary hydraulic parameters should be determined early in the design phase. As previously mentioned, the scope of the hydrologic study should be proportional to the importance of the hydraulic structure involved, the type of highway, the impacts on the local property, and potential risks involved. The hydraulic design of the channel involves selecting the cross-section and lining to maintain the flow predicted from the hydrologic study. The capacity of the channel is affected by its size, shape, roughness, and slope.

The slope is generally controlled by the existing terrain, and the engineer has little control over this. As much as is practical, however, the engineer should avoid sudden changes in the slope as well as the alignment of the channel. Abrupt changes in channel alignment can lead to unintentional channel changes by aggradation and avulsion. Abrupt changes in slope can cause either erosion, if the grade is steepened, or an accumulation of buildup, if it is flattened.

Erosion and deposition may also be limited by controlling the velocity of the flow. The velocity of the water is dependent upon the size, shape, roughness, and slope of the channel as well as the quantity of flow. Recommended flow velocities for unlined

www.EngineeringEBooksPdf.com

TABLE 5.5 Recommended Permissible Velocities for Unlined Channels

Type of material in excavation section	Permissible velocity, ft/s		Permissible velocity, m/s	
	Intermittent flow	Sustained flow	Intermittent flow	Sustained flow
Fine sand (noncolloidal)	2.5	2.5	0.76	0.76
Sandy loam (noncolloidal)	2.5	2.5	0.76	0.76
Silt loam (noncolloidal)	3.0	3.0	0.91	0.91
Fine loam	3.5	3.5	1.07	1.07
Volcanic ash	4.0	3.5	1.22	1.07
Fine gravel	4.0	3.5	1.22	1.07
Stiff clay (colloidal)	5.0	4.0	1.52	1.22
Graded material (noncolloidal)				
Loam to gravel	6.5	5.0	1.98	1.52
Silt to gravel	7.0	5.5	2.13	1.67
Gravel	7.5	6.0	2.29	1.83
Coarse gravel	8.0	6.5	2.44	1.98
Gravel to cobbles, under 6 in (150 mm)	9.0	7.0	2.74	2.13
Gravel and cobbles over 8 in (200 mm)	10.0	8.0	3.05	2.44

Source: From *Highway Design Manual,* California Department of Transportation, with permission.

channels are shown in Table 5.5. Velocities in lined channels can generally be much greater. To minimize deposition of sediment, the minimum gradient should be about 0.5 percent for earth-lined and grass-lined channels and 0.35 percent for paved channels. Also, decreasing gradients should be avoided.

5.2.2 Channel Realignment

At times it will be advantageous or necessary to realign or change the hydraulic characteristics of the channel. Reasons for altering the channel include improving culvert alignment, protecting roadways from erosion damage, reducing maintenance requirements, and eliminating hydraulic structures where the roadway recrosses the channel.

Plans for channel modifications must include a determination of what effect the change will have on the stream and the surrounding environment. Long- and short-term effects must be considered. The impact on the stream of the realignment or change in slope will vary from one site to another. At some sites, minor changes will have significant impacts, while at others the opposite may be true. Regardless of the magnitude of the effect on the stream and its environment that the change may have, plans should be developed to mitigate those effects.

Changes to a channel usually cause a decrease in the roughness and an increase in the slope. The resultant higher velocity may lead to increased scour and sedimentation buildup at the downstream end of the channel improvement, and may result in changes that affect the habitat in and around the stream. Any changes to existing streams that support fish or wildlife must be coordinated with the appropriate resource agencies early in the planning phase.

5.2.3 Channel and Shore Protection

Highways are often located adjacent to streams, lakes, and coastal areas. Channel and shore protection must be provided wherever the need is apparent or the risk is high.

www.EngineeringEBooksPdf.com

In other circumstances, where the possibility of damage to the roadway or adjacent land is not clear or risk is low, it may be acceptable to delay construction of embankment stabilization measures until a problem actually develops.

There are a number of methods of protecting the roadway from damage due to erosion. The simplest and surest of these is to locate the highway away from the erosive forces. This should always be considered, although it is rarely the most economical alternative. The most common method used to protect the roadway is to line the roadway embankment with a material that is resistant to erosion such as concrete or rock. Another method is to reduce the force of the water that would cause the erosion. Such bank protection structures retard the flow of the water while at the same time allowing a sedimentation buildup to reverse the trend of erosion and replace material that may have been lost. A final method of protection that should be considered is redirecting the eroding force away from the embankment. This may be done by the use of jetties or baffles, or even by creating a new channel.

Any combination of the above methods may be used to achieve the desired protection. The design of the protective features should be commensurate with the importance of the roadway being protected and with the risks involved. (See *Highway Drainage Guidelines,* Vol. III, *Erosion and Sediment Control,* AASHTO; "Design of Riprap Revetment," HEC 11, FHWA; and "Design of Roadside Channels with Flexible Linings," HEC 15, FHWA.)

5.3 FUNDAMENTALS OF OPEN-CHANNEL FLOW

The fundamental relationships for hydraulic flow are the same for channels that are physically open at the top, such as roadway channels and curbs and gutters, and for pipes and culverts that have a free water surface. In both cases, hydraulic design is based on *open-channel flow.* An understanding of these relationships is important for comprehending various design aids subsequently presented.

5.3.1 Types of Flow

Open-channel flow may be categorized by three characteristics: the flow may be (1) steady or unsteady, (2) uniform or nonuniform, and (3) either subcritical, critical, or supercritical. This discussion will begin with the first two categories, and the third will be discussed later.

Steady flow means that at a particular point, there is no change in depth with respect to time. By extension, this means that there is no change in the quantity of flow. *Unsteady flow* means that the depth does change with time.

Uniform flow assumes that there is no change in depth or quantity of water at any section along the length of the channel (or culvert) under investigation. This requires that there be no change in velocity of the flow, and it is possible only if the slope, roughness, and cross-section all remain constant along the length of the channel. This state is evidenced by the fact that the water surface is parallel to the channel bottom. Nonuniform flow assumes a change in depth or velocity along the length of the channel. This type of flow may be further classified as rapidly varying or gradually varying flow.

For most highway applications, the flow is steady and the changes in the section are so gradual that the flow may be considered uniform. The equations for open-channel flow are based on that assumption. Where the change in the cross-section of the channel is dramatic, nonuniform flow should be assumed. (For analysis of nonuniform flow, see E. F. Brater and H. W. King, *Handbook of Hydraulics,* McGraw-Hill, 1996.)

www.EngineeringEBooksPdf.com

5.3.2 Continuity Equation

The continuity equation is based on the basic and fundamental concept that the quantity of flow passing any cross-section remains constant throughout the length of the stream flow:

$$Q = AV \tag{5.10}$$

where Q = discharge, ft^3/s (m^3/s)
A = area, ft^2 (m^2)
V = velocity, ft/s (m/s)

5.3.3 Manning's Equation

Manning's equation assumes uniform, turbulent flow conditions and computes the mean flow velocity for an open channel:

$$V = \left(\frac{1.486}{n}\right)R^{2/3}S^{1/2} \text{ in U.S. Customary units} \tag{5.11a}$$

$$V = \frac{R^{2/3}S^{1/2}}{n} \text{ for SI units} \tag{5.11b}$$

where V = mean velocity, ft/s (m/s)
n = Manning coefficient of roughness
R = hydraulic radius = A/WP, ft (m)
A = cross-sectional flow area, ft^2 (m^2)
WP = wetted perimeter = total perimeter of cross-sectional area of flow minus free surface width, ft (m)
S = channel slope

Manning's equation may be solved directly or obtained from the nomograph in Fig. 5.3. Typical Manning's n values are given in Table 5.6. For shallow flows, the effective n values should generally be increased, because the wetted perimeter will have a greater effect on the flow.

The continuity equation and Manning's equation may be used in conjunction to directly compute channel discharges. Substitute Eq. (5.11) into Eq. (5.10) and rearrange terms to obtain

$$AR^{2/3} = \frac{Qn}{1.486S^{1/2}} \text{ in U.S. Customary units} \tag{5.12a}$$

$$AR^{2/3} = \frac{Qn}{S^{1/2}} \text{ for SI units} \tag{5.12b}$$

R is a function of A. Thus, for a given slope, flow quantity, and n value, $AR^{2/3}$ may be determined and the normal depth of flow calculated by trial and error.

5.3.4 Energy Equation

The energy equation is based on the principle that energy must be conserved; that is, the energy at any one cross-section on a stream is equivalent to the energy at any other section plus any intervening energy losses. This relationship, a form of the Bernoulli equation, may be used wherever there is a change in the size, shape, or slope of the channel and is useful in determining the depth of flow.

www.EngineeringEBooksPdf.com

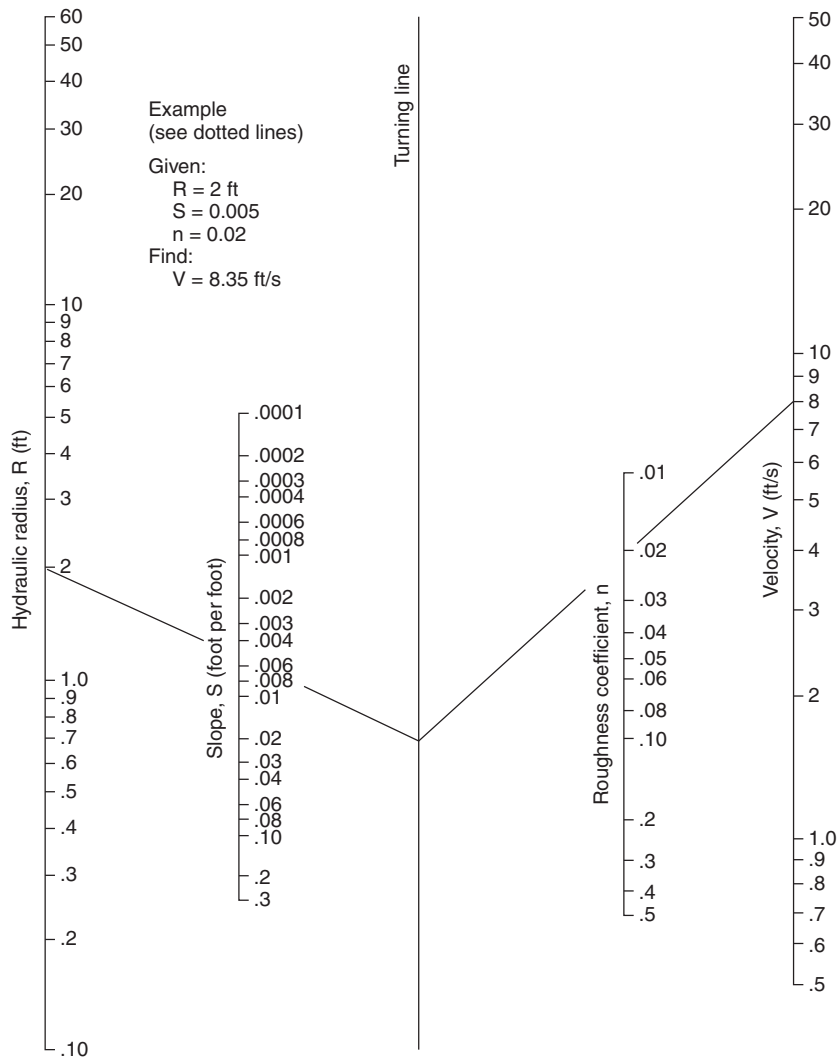

FIGURE 5.3 Nomograph for solution of Manning equation. (*From* Highway Design Manual, *California Department of Transportation, with permission*)

$$z_1 + d_1 + \left(\frac{V_1^2}{2g}\right) = z_2 + d_2 + \left(\frac{V_2^2}{2g}\right) + h_L \tag{5.13}$$

where z_n = distance above some datum, ft (m)
d_n = depth of flow, ft (m)
V_n = flow velocity, ft/s (m/s)
g = acceleration of gravity, 32.2 ft/s^2 (9.8 m/s^2)
h_L = head loss between the two sections, ft (m)

www.EngineeringEBooksPdf.com

TABLE 5.6 Values of the Roughness Coefficient *n* for Use in the Manning's Equation

	Min	Avg	Max
A. Open-channel flow in closed conduits			
1. Corrugated-metal storm drain	0.021	0.024	0.030
2. Cement-mortar surface	0.011	0.013	0.015
3. Concrete (unfinished)			
a. Steel form	0.012	0.013	0.014
b. Smooth wood form	0.012	0.014	0.016
c. Rough wood form	0.015	0.017	0.020
B. Lined channels			
1. Metal			
a. Smooth steel (unpainted)	0.011	0.012	0.014
b. Corrugated	0.021	0.025	0.030
2. Wood			
a. Planed, untreated	0.010	0.012	0.014
3. Concrete			
a. Float finish	0.013	0.015	0.016
b. Gunite, good section	0.016	0.019	0.023
c. Gunite, wavy section	0.018	0.022	0.025
4. Masonry			
a. Cemented rubble	0.017	0.025	0.030
b. Dry rubble	0.023	0.032	0.035
5. Asphalt			
a. Smooth	0.013	0.013	
b. Rough	0.016	0.016	
C. Unlined channels			
1. Excavated earth, straight and uniform			
a. Clean, after weathering	0.018	0.022	0.025
b. With short grass, few weeds	0.022	0.027	0.033
c. Dense weeds, high as flow depth	0.050	0.080	0.120
d. Dense brush, high stage	0.080	0.100	0.140
2. Dredged earth			
a. No vegetation	0.025	0.028	0.033
b. Light brush on banks	0.035	0.050	0.060
3. Rock cuts			
a. Smooth and uniform	0.025	0.035	0.040
b. Jagged and irregular	0.035	0.040	0.050

Source: From F. S. Merritt, ed., *Standard Handbook for Civil Engineers,* McGraw-Hill, 2004, with permission.

Subscripts 1 and 2 refer to two sections along the flow line as depicted in Fig. 5.4. The velocity head is given by $V^2/2g$ and the specific energy is defined as $d + V^2/2g$. The plots in Fig. 5.4 illustrate the head at points along the length of the channel. The line drawn through points of static head is known as the *hydraulic grade line,* and the line drawn through points of total head is known as the *energy grade line.* The head loss between sections includes losses due to flow friction along the channel and losses due to turbulence at junctions and bends.

5.3.5 Critical Flow Depth

When the depth of flow is plotted against the specific energy, the specific energy diagram may be obtained and the critical depth found as illustrated in Fig. 5.5. The critical depth is defined as that depth where the specific energy is minimum. The flow velocity at the

www.EngineeringEBooksPdf.com

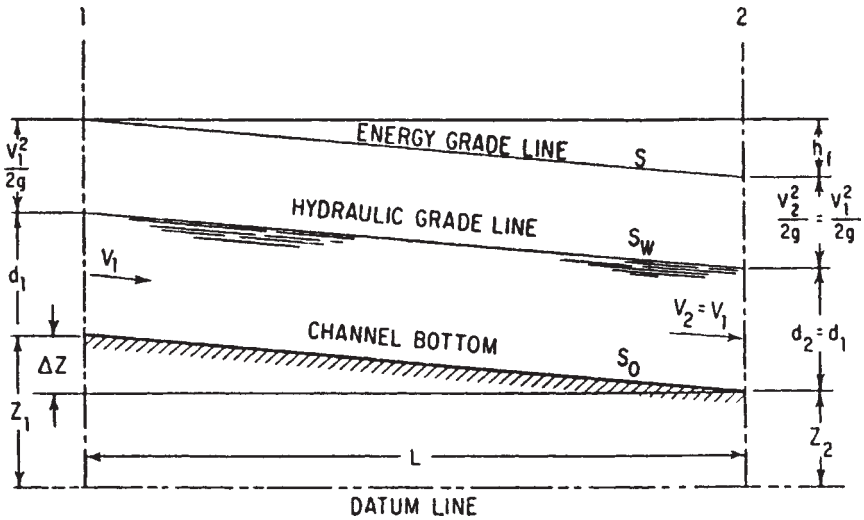

FIGURE 5.4 Flow characteristics for uniform open-channel flow. (*From F. S. Merritt, ed.,* Standard Handbook for Civil Engineers, *McGraw-Hill, 2004, with permission*)

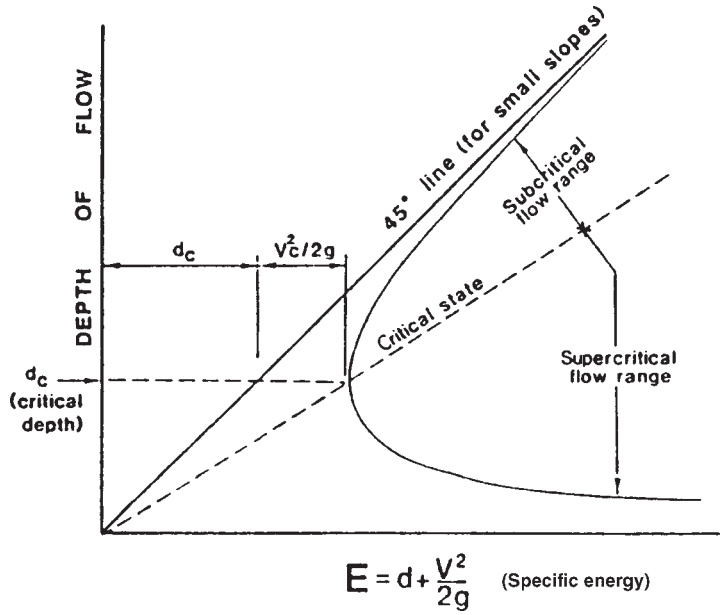

FIGURE 5.5 Specific energy diagram. (*From* Highway Design Manual, *California Department of Transportation, with permission*)

www.EngineeringEBooksPdf.com

critical depth is called the *critical velocity*. The channel slope that causes the critical depth and critical velocity is termed the *critical slope*. If the depth is greater than the critical depth, the flow is said to be subcritical and the velocity head reduces. Where the depth is less than the critical depth, the flow is said to be supercritical and the velocity head increases. For any particular energy level, except where the depth is critical, there are two corresponding depths that may occur. However, the depth may not alternate between these two values without a change in the channel configuration or slope.

Although the critical depth gives the greatest discharge, flow that causes the depth to be close to critical should be avoided, and thus the critical slope should be avoided. Flows near the critical depth may be turbulent. Inspection of the specific energy diagram reveals that where the depth is close to the critical depth, it takes little energy to change the flow from subcritical to supercritical or the reverse. If the flow does change from subcritical to supercritical, a hydraulic jump will occur. If placing the depth of flow near critical is unavoidable, it is advisable to assume the least favorable type of flow for design purposes. The critical depth may be determined from the following relationship:

$$\frac{A^3}{T} = \frac{Q^2}{g} \tag{5.14}$$

where A = cross-sectional flow area, ft^2 (m^2)
T = top width of channel flow, ft (m)
Q = discharge, ft^3/s (m^3/s)
g = acceleration of gravity, 32.2 ft/s^2 (9.8 m/s^2)

For a channel with vertical walls, the velocity corresponding to the critical depth is given by

$$V_c = \left(\frac{gA}{T}\right)^{1/2} \tag{5.15}$$

where V_c = critical velocity, ft/s (m/s). Also, for a channel with vertical walls, the flow area at a point of critical depth d_c is

$$A = T(d_c) \tag{5.16}$$

Substitution in Eq. (5.14) leads to

$$d_c = \left(\frac{Q^2}{gT^2}\right)^{1/3} \tag{5.17}$$

It can be seen from this relationship that for a given flow, as the width of the channel changes the critical depth also changes. Such locations should be investigated for a hydraulic jump.

Points of control are locations where the depth of flow may be easily determined. The critical depth is one point of control and may be found in several typical locations. As discussed above, one of these locations may be where there is a change in the channel section. Other typical locations are where the slope changes abruptly from flat (subcritical) to steep (supercritical), at the crest of an overflow dam or weir, and at the outlet of a culvert on a subcritical slope discharging into a basin or wide channel.

www.EngineeringEBooksPdf.com

The Froude number (Fr) may also be used in determining whether the channel is under supercritical, critical, or subcritical flow:

$$\mathrm{Fr} = \frac{V}{(gd_h)^{1/2}} \tag{5.18}$$

where $d_h = A/T$. If Fr < 1.0, the channel flow is subcritical; if Fr $= 1.0$, the channel flow is critical; and if Fr > 1.0, the channel flow is supercritical.

Water surface profiles for the gradually varying flow condition may be determined by either the direct step method or the standard step method. The former method is applicable only to straight prismatic channel sections with gradually varying areas of flow. The standard step method may be used in nonprismatic channel sections and channel alignments that are not straight. Where the flow is subcritical, the analysis for determination of the water profile begins at the control point and proceeds upstream. Where the flow is supercritical, the opposite is true. (See V. T. Chow, *Open-Channel Hydraulics,* McGraw-Hill, 1959; and F. S. Merritt, ed., *Standard Handbook for Civil Engineers,* McGraw-Hill, 1996.)

Example: Critical Depth and Critical Velocity. A channel has a width of 10 ft (3 m) and vertical sides. Determine the critical flow depth and critical velocity for a flow of 1000 ft^3/s (28 m^3/s).

U.S. Customary units:

From Eq. (5.17), $d_c = (Q^2/gT^2)^{1/3} = [(1000)^2/32.2(10)^2]^{1/3} = 6.77$ ft.
From Eq. (5.16), $A = T(d_c) = 10(6.77) = 67.7$ ft^2.
From Eq. (5.15), the critical velocity is $V_c = (gA/T)^{1/2} = (32.2 \times 67.7/10)^{1/2} = 14.8$ ft/s.

SI units:

From Eq. (5.17), $d_c = [(28)^2/9.8(3)^2]^{1/3} = 2.07$ m.
From Eq. (5.16), $A = 3(2.07) = 6.21$ m^2.
From Eq. (5.15), $V_c = (9.8 \times 6.21/3)^{1/2} = 4.5$ m/s.

5.4 DESIGN OF ROADWAY DRAINAGE

Roadway drainage includes the entire system from pavement drainage through storm drains. Drainage features that make up the system include curbs, gutters, drop inlets, median drains, overside drains, roadside ditches, and storm drains. The basic design procedure for roadway drainage includes hydrology, surface water removal, and disposal. A properly designed system must adequately accommodate the design runoff by removing it from the roadway surface and conveying it to the outfall, avoiding damage to adjacent property and roadway hazards from overflowing and ponding.

5.4.1 General Considerations

Pavement may be drained in one of two ways. The runoff may be allowed to sheet-flow across the roadway surface and into roadside ditches. This may not always be possible or cost-effective, because of right-of-way constrictions. Alternatively, a curb and gutter section is used to channel the flow.

www.EngineeringEBooksPdf.com

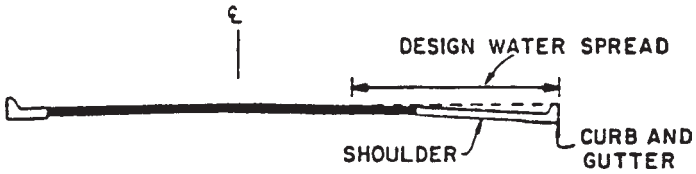

FIGURE 5.6 Illustration of design water spread. (*From* Highway Drainage Guidelines, *Vol. IX, American Association of State Highway and Transportation Officials, Washington, D.C., 1999, with permission*)

An appropriate design storm must be selected so that the drainage facilities may be properly designed. This design storm must relate to an acceptable level of flooding of the roadway with regard to both area and frequency. The acceptable level of flooding is termed the *design water spread* (Fig. 5.6) and is defined by the acceptable amount of encroachment on the roadway surface that is assumed to have a certain probability of occurrence. It may not be economically feasible to completely prevent encroachment on the roadway. Alternatively, it is unwise to allow spread that results in unsafe driving conditions. Greater water spread produces hydroplaning, greater splash and spray effect, and an accompanying decrease in visibility and vehicle control by the users of the facility. The amount and frequency of encroachment should vary with the type of roadway being designed, because roads with higher volumes and speeds can tolerate less loss of visibility than local and collector roads.

AASHTO has developed general guidelines on highway drainage that may be used to formulate roadway surface drainage criteria. Table 5.7 shows the suggested AASHTO procedure for relating the road classification, the frequency of the design storm, and

TABLE 5.7 Minimum Design Frequency

	Design frequency, years			Design spread	
Road classification	<10	10	50	Shoulder or parking	Partial driving lane (¼, ½, ¾)
1. High-volume divided highway					
a. <45 mi/h (70 km/h)		x			x
b. >45 mi/h (70 km/h)		x		x	
c. Sag point			x		x
2. High-volume bidirectional					
a. <45 mi/h (70 km/h)		x			x
b. >45 mi/h (70 km/h)		x		x	
c. Sag point			x		x
3. Collector					
a. <45 mi/h (70 km/h)	x				x
b. >45 mi/h (70 km/h)		x		x	
c. Sag point		x			x
4. Local streets					
a. Low ADT*	x				x
b. High ADT		x			x
c. Sag point		x			x

*Average daily traffic.

Source: From *Highway Drainage Guidelines,* Vol. IX, American Association of State Highway and Transportation Officials, Washington, D.C., 1999, with permission.

www.EngineeringEBooksPdf.com

TABLE 5.8 Desirable Roadway Drainage Guidelines

Highway type/category/feature	Design storm		Design water spread		
	4% (25 yr)	10% (10 yr)	Shoulder or parking lane	Half of outer lane	Local standard
Freeways					
Through traffic lanes, branch connections, and other major ramp connections	x	—	x	—	—
Minor ramps	—	x	x	—	—
Frontage roads	—	x	—	—	x
Conventional highways					
High-volume, multilane, speeds over 45 mi/h (70 km/h)	x	—	x	—	—
High-volume, multilane, speeds 45 mi/h (70 km/h) and under	—	x	—	x	—
Low-volume, rural, speeds over 45 mi/h (70 km/h)	x	—	x	—	—
Urban, speeds 45 mi/h (70 km/h) and under	—	x	—	—	x
All state highways					
Depressed sections that require pumping: Use a 2% (50-year) design storm for freeways and conventional state highways. Design water spread at depressed sections should not exceed that of adjacent roadway sections. A 4% (25-year) design storm may be used on local streets or road undercrossings that require pumping.					

Source: From *Highway Design Manual,* California Department of Transportation, with permission.

the design spread. However, more specific local or regional guidelines are usually developed and should be referenced for highway drainage design. An example of a regional guideline developed by the California Department of Transportation (Caltrans) is shown in Table 5.8. It is apparent that a more severe storm (25-year versus 10-year mean recurrence interval) is used for roadways with higher volumes and speeds, as well as a more limited design water spread.

5.4.2 Curbs, Gutters, and Inlets

The roadway surface water can be removed by a series of drains that carry the water into a collection and disposal system. The curb, gutter, and inlet design must keep flooding within the parameters established in roadway drainage guidelines. The hydraulic efficiency of inlets is related to the roadway grade, the cross-grade, the inlet geometry, and the design of the curb and gutters.

Curbs are divided into two classes: barrier and mountable. Barrier curbs are steep-faced and generally 6 to 8 in (150 to 200 mm) high. Mountable curbs are generally 6 in (150 mm) high or less with relatively flat sloping faces to allow vehicles to cross them when required. Neither barrier curbs nor mountable curbs should be used on high-speed roadways. (See Chap. 6, Safety Systems.)

Gutters begin at the bottom of the curb and extend toward the roadway a varying distance, usually 1 to 6 ft (300 to 1800 mm). They may or may not be constructed with the same material as the roadway.

The longitudinal grade of the gutter is controlled by the highway grade line. For drainage purposes, it is important to maintain some minimum longitudinal slope to

www.EngineeringEBooksPdf.com

ensure that runoff does not accumulate in ponds. Gutter cross-slopes of 5 to 8 percent should be maintained for a distance of 2 to 3 ft (600 to 900 mm) for that portion of the gutter adjacent to the curb.

The following modification of Manning's equation may be used to determine the spread of the gutter flow as well as the maximum depth at the curb face. This applies to a section with a single cross-slope. (For additional information, nomographs, and flow solutions for gutters with composite cross-slopes, see *Urban Drainage Design Manual*, HEC 22, FHWA.)

$$Q = \left(\frac{K}{n}\right) S_X^{1.67} S^{0.5} T^{2.67} \tag{5.19}$$

where Q = rate of discharge, ft^3/s
K = 0.56 for U.S. Customary units (0.376 for SI units)
n = Manning's coefficient of roughness
S_X = cross-slope
S = longitudinal slope
T = spread or top width of flow in gutter = d/S_x, ft
d = depth of flow at face of curb, ft

Example: Gutter Flow Spread and Depth. A concrete gutter for a roadway with a grade of 0.05 and a cross-slope of 0.04 must accommodate a flow of 1.4 ft^3/s. Determine the spread of the flow and its depth at the curb face. Assume $n = 0.15$.

Substitute in Eq. (5.19) and solve for the spread T as follows:

$$1.4 = \left(\frac{0.56}{0.015}\right)(0.04)^{1.67}(0.05)^{0.5}T^{2.67}$$

$$T^{2.67} = 36.23$$

$$T = 3.84 \text{ ft } (1.17 \text{ m})$$

It follows that the depth at the curb is $d = TS_X = 3.84 \times 0.04 = 0.15$ ft (46 mm).

5.4.3 Inlet Location and Type

One of the major objectives in the design of the roadway drainage system is to limit the encroachment of the flow to that developed in the roadway drainage guidelines. However, this spread cannot be determined until the inlet is located. After the inlet is located, the drainage area contributing to the flow into that inlet is determined. Discharge based on the rational method is then calculated, and finally the spread is determined based on that discharge and the gutter characteristics. If the spread is found to be too great (leading to possible unsafe conditions) or too small (possibly indicating an inefficient design), the inlet should be relocated and the process repeated. As can be seen, this design is an iterative process. The process is also controlled by surface features that restrict possible location of inlets, such as streets, driveways, and utilities.

There are also areas where inlets are nearly always required. These include sag points, points of superelevation reversal, street intersections, and at bridges. Where an inlet is required in the vicinity of a driveway, it should always be located upstream of the driveway. If it is located downstream, the driveway may affect the flow and cause a significant portion to bypass the inlet.

www.EngineeringEBooksPdf.com

Finally, the type and size of the inlet have a direct affect on location and spacing. Similarly, designing for greater spread and allowing some bypass of the upstream inlets to occur with the residual being intercepted by those farther downstream (carry-over flow) will result in fewer inlets.

The basic types of inlets are the curb-opening inlet and the grate inlet, as shown in Fig. 5.7. Two other types frequently used are the slotted drain inlet and the combination inlet (grate plus curb opening) shown in Fig. 5.8.

Curb-opening inlets, which have the drainage opening in the face of the curb, are very durable and are comparatively free from blockage by debris. This type generally relies heavily on the bordering depression to be effective at intercepting the water flow and is relatively inefficient when located in an on-grade situation. It is probably the most efficient inlet type at sag points because of its tendency to remain free of clogging by debris and its large, hydraulically efficient opening. In addition, this type of inlet opening offers little interference to vehicular traffic, pedestrians, or bicyclists. For curb-opening inlets on continuous grades, a window length that permits approximately 15 percent bypass is considered optimum.

The length of the opening required for total interception of the gutter flow can be determined by the following equation:

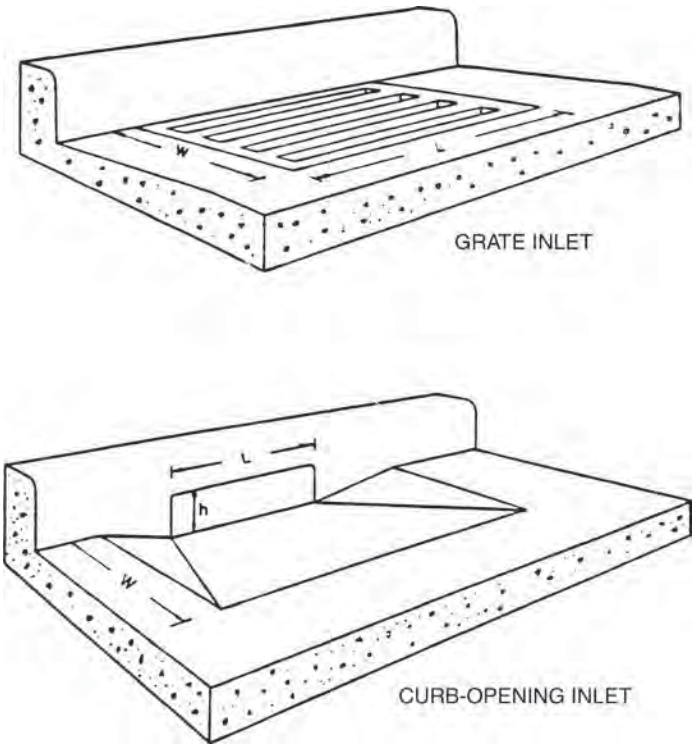

FIGURE 5.7 Perspective views of grate inlet and curb-opening inlet. (*From* Urban Drainage Design Manual, *HEC 22, FHWA, with permission*)

www.EngineeringEBooksPdf.com

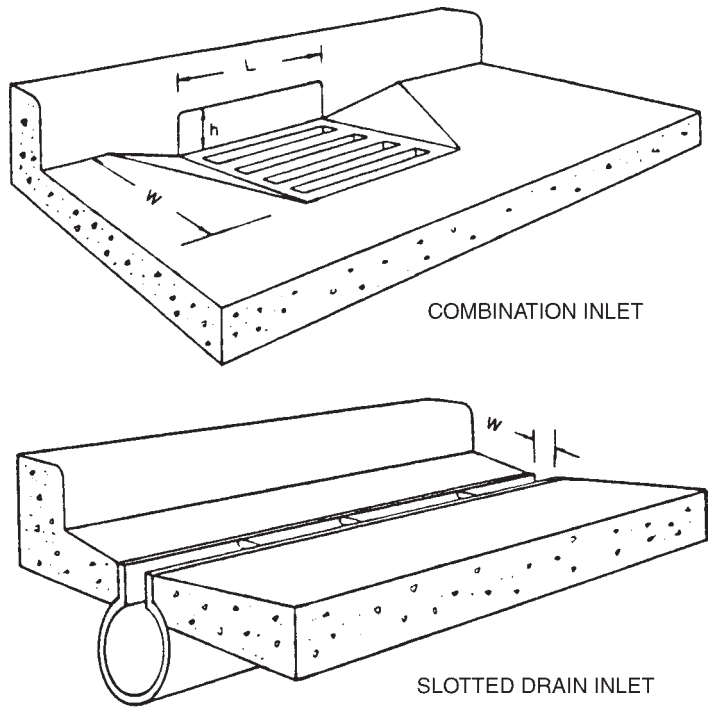

FIGURE 5.8 Perspective views of combination and slotted drain inlets. (*From* Urban Drainage Design Manual, *HEC 22, FHWA, with permission*)

$$L_t = KQ^{0.42}S^{0.3}(nS_X)^{-0.6} \tag{5.20}$$

where L_t = length of curb opening for total interception of flow, ft (m)
Q = discharge, ft^3/s (m^3/s)
S = longitudinal slope of gutter
n = Manning's roughness coefficient
S_X = transverse slope of gutter
K = 0.6 for U.S. Customary units (0.817 for SI units)

Where there is a depression, the equivalent transverse slope S_e must be determined and used for S_X. (See *Urban Drainage Design Manual,* HEC 22, FHWA, for a complete discussion of this and flow at sag points.)

Grate inlets come in a variety of shapes and sizes and are efficient where debris is not a problem. However, most inlets are subject to varying amounts of debris, and the selection of grate inlets, especially those located at sag points, must take this possibility into account.

For greatest hydraulic efficiency, grate inlets should be oriented with grate bars parallel to the surface flow. However, grate bars oriented parallel with traffic can cause problems where bicycles are present, and specifically designed "bicycle-proof" grates with additional transverse bars should be used. Other factors influencing the hydraulic capacity of this type of inlet include the longitudinal and cross-slope of the gutter, the width and length of the gutter, and the size and shape of the bars. The grate inlet will intercept all of the flow

www.EngineeringEBooksPdf.com

that passes over the top of the grate as long as the grate is long enough. In addition, a portion of the side flow, or the flow that is located above the grate toward the roadway centerline, will be intercepted. The amount of the intercepted side flow depends upon the velocity of the flow, the length of the inlet, and the cross-slope of the gutter.

Combination grates—generally, curb-opening and grate inlets—are desirable at sag points. The curb opening will generally keep the inlet from clogging. At grade locations, however, the efficiency of the combination inlet approaches that of the grate inlet.

Slotted drains can provide continuous interception of the flow when used on grades. However, because of the possibility of clogging, they should be used only in combination with other types of inlets at sag points. Slotted drains are also useful to supplement the existing drainage system where the roadway needs to be widened.

Inlets at grade sags deserve additional deliberation, since any blockage of the inlet will typically lead to flooding. Typical design considerations are to provide additional inlets or base the design on a relatively high assumption of debris blockage.

5.4.4 Culverts and Storm Drains

The open-end conduits used to convey water from one side of the roadway through the embankment to the other side are typically referred to as *culverts.* A network or system of conduits to carry storm water intercepted by inlets is referred to as a *storm drain system.* Conduits for culverts and storm drains are available in many different shapes, sizes, and materials, as discussed subsequently. Available shapes include circular, elliptical (horizontal or vertical), pipe-arch, arch, and box shapes. Factors that affect the shape at a particular site include the fill height, construction costs, and potential for clogging by debris. Where the cover over the conduit is limited, pipe-arch, arch, elliptical (horizontal), or box shapes may be more applicable. Where the fill height is great, circular shapes tend to be structurally and economically more favorable. Factors involved in the selection process include hydraulic, structural, construction, maintenance, and durability requirements. (See Art. 5.5 for hydraulic design of culverts.)

A system of closed conduits (storm drains and culverts) to convey the runoff from the inlets to the outfall must be designed starting at the upstream end and proceeding downstream. Each section of pipe that extends from inlet to inlet, or from an inlet to the final outfall, is called a *run.* Each run requires a separate analysis because of the change in flow at each, and possible changes in slope, pipe size, and type. After all runs are initially sized, the hydraulic grade line is developed (Art. 5.3.4). Unlike the sizing of the conduits, the calculations for this proceed in an upstream direction. In addition to head loss from friction along the length of the culvert, the hydraulic grade line must account for the effects of losses caused by turbulence at junctions and bends. Once the hydraulic grade line is established, it may be compared with the grade line of the system to ensure that it does not exceed an allowable high-water elevation. If it should extend above these allowable elevations, then the initial design must be adjusted.

In addition to system sizing based on hydraulic requirements, conduits should generally not be smaller than 12 to 18 in (300 to 450 mm) in diameter, and should have a minimum velocity of not less than 2.5 ft/s, to reduce the potential for debris clogging. Greater minimum diameters may be appropriate in some cases, particularly under high fills.

Flow in storm drains is assumed to be steady uniform flow. With this assumption, one of two hydraulic design approaches for sizing the run may be used, either open-channel flow or pressure flow. Open-channel flow assumes the flow in the conduit is open to atmospheric pressure; that is, the depth of the flow must be less than the height of the conduit. Pressure flow assumes the conduit is full with the wetted perimeter equal to the complete perimeter of the conduit. In this case, unlike open-channel flow, a pressure head will be above the conduit.

www.EngineeringEBooksPdf.com

The maximum possible flow in a circular conduit under open-channel flow occurs when the barrel is approximately 95 percent flowing full. This is referred to as *just-full capacity* or *just-full discharge*.

Storm drain systems based on open-channel flow will have larger conduits than those based on pressure flow. This allows for a slight factor of safety when there is an unanticipated increase in runoff, which is desirable because the determination of the flow entering the system is not an exact science. *However*, initial construction costs will be somewhat higher.

If the design is based on pressure flow, the inlet and access hole elevations will be the allowable high-water elevations and should not be exceeded. Additionally, existing systems may need to be analyzed assuming pressure flow in order to accommodate new design flows.

It is common among state departments of transportation to design storm drain systems using both open-channel flow and pressure flow. The system is initially designed for the just-full capacity using a lesser design frequency, say a 5-year or 10-year design frequency. After this initial sizing, the elevation of the hydraulic grade line is checked using the same or greater design frequency. The hydraulic grade line is then compared to critical high-water elevations, which should not be exceeded.

The storm drain system can outfall into a body of water, a stream or river, an existing storm drain system, or a channel. Conformance to National Pollutant Discharge Elimination System (NPDES) and local water quality regulations may be necessary whenever discharging pavement runoff. (See Chap. 1.) Regardless of the type of outfall, the flow line of the outfall should be lower than the elevation of the outlet. The outlet should be positioned so that the flow of the outfall is directed downstream, thus limiting erosion. (See *Highway Drainage Guidelines,* Vol. IX, AASHTO, 1999; and *Design and Construction of Storm and Sanitary Sewers,* ASCE, 1986.)

5.4.5 Subsurface Drainage

Saturation of the structural section under the roadway (subgrade and base course) and the foundation materials is a primary cause of early roadbed failure because of decreased ability to support heavy truck loads. Saturated conditions can lead to piping of fines and frost damage or icing of the roadway surface. Designs to prevent water from infiltrating beneath the pavement will lead to longer-lasting and more economical roadbed sections. Designs typically include *subsurface drainage* (subdrains) to intercept and reroute encroaching groundwater and *subgrade drainage* to handle surface water inflow.

The design of subsurface drainage begins with flow determination. Although this may be determined by analytical methods, it is usually cumbersome and unsatisfactory to do so. Field explorations will generally yield better results. These investigations should include soil and geological studies, borings to find the elevation and extent of the aquifer, and measurements of the groundwater discharge. The investigation should be thorough and should be conducted during the rainy season or during snow melt if the region has snow cover. It may involve digging a trench or pit to aid in estimating flow. After the design flow is established, the pipe may be sized using Manning's equation, Eq. (5.11).

The standard underdrain consists of a perforated pipe near the bottom of a narrow trench. The trench is filled with a permeable material and may be lined with filter fabric if the trench is excavated in erodable soils. Figure 5.9 illustrates an underdrain used to intercept sidehill seepage.

The following considerations apply to the design of subsurface drainage:

1. Surface drainage should not be allowed to discharge into the subsurface drainage system.
2. Outlets for the underdrain system should be provided for at intervals not exceeding 500 ft (150 m) to 1000 ft (300 m), depending upon the porosity of the base course.

www.EngineeringEBooksPdf.com

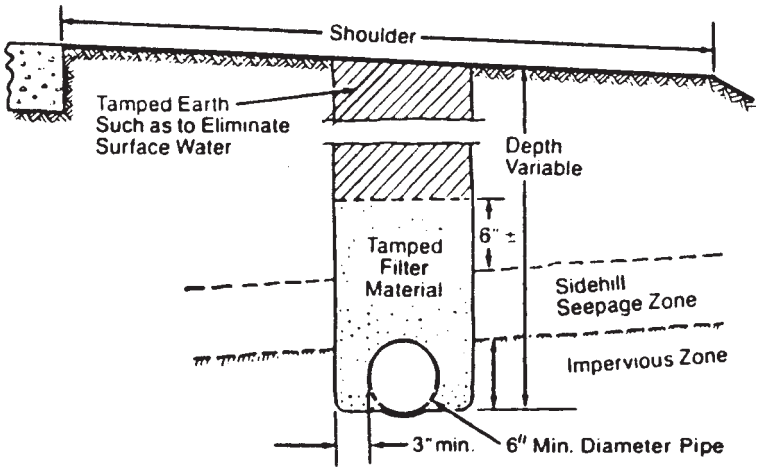

FIGURE 5.9 Intercepting drain in impervious zone for keeping free water out of roadway and subgrade. Conversion: 1 in = 25.4 mm. (*From* Handbook of Steel Drainage and Highway Construction Products, *American Iron and Steel Institute, 1994, with permission*)

Outlet may run into the storm drain system as long as there is no possibility of backflow due to a buildup of hydrostatic pressure.

3. Pipe underdrains should be placed on grades steeper than 0.5 percent if possible. Minimum grades of 0.2 percent are acceptable.
4. The depth of the underdrain will depend upon the permeability of the soil, the elevation of the aquifer, and the amount of necessary drawdown to achieve stability.
5. Pipes for underdrains may be made of metal, plastic, concrete, clay, asbestos cement, or bituminous fiber. Two types of openings are used to allow the groundwater into the pipe: perforated and open-jointed. Open-jointed pipes such as clay and concrete drain tiles are limited to areas where the admission of excessive solids through the joints may be avoided.

(See "Pavement Subsurface Drainage Design," FHWA-NHI-99-028, and "Pavement Subsurface Drainage Systems," NCHRP Synthesis 239, TRB, 1997.)

5.4.6 Subgrade Drainage

As indicated previously, subgrade drainage is designed to handle surface water inflow, whereas subdrains are designed to accommodate encroaching groundwater. Surface water can enter the pavement subsection through joints, cracks, and infiltration of the pavement. Rapid drainage of the pavement structural section is necessary to minimize piping and swelling of the subgrade material, and the subsequent increased deflections and cracking of the pavement surface. This rapid drainage can best be achieved by placing a highly permeable drainage layer under the full width of the pavement and allowing it to drain the infiltration to an edge drain. Figure 5.10 illustrates edge drain designs using either a pipe (perforated or slotted) in a trench filled with a permeable material, or a geocomposite panel drain.

www.EngineeringEBooksPdf.com

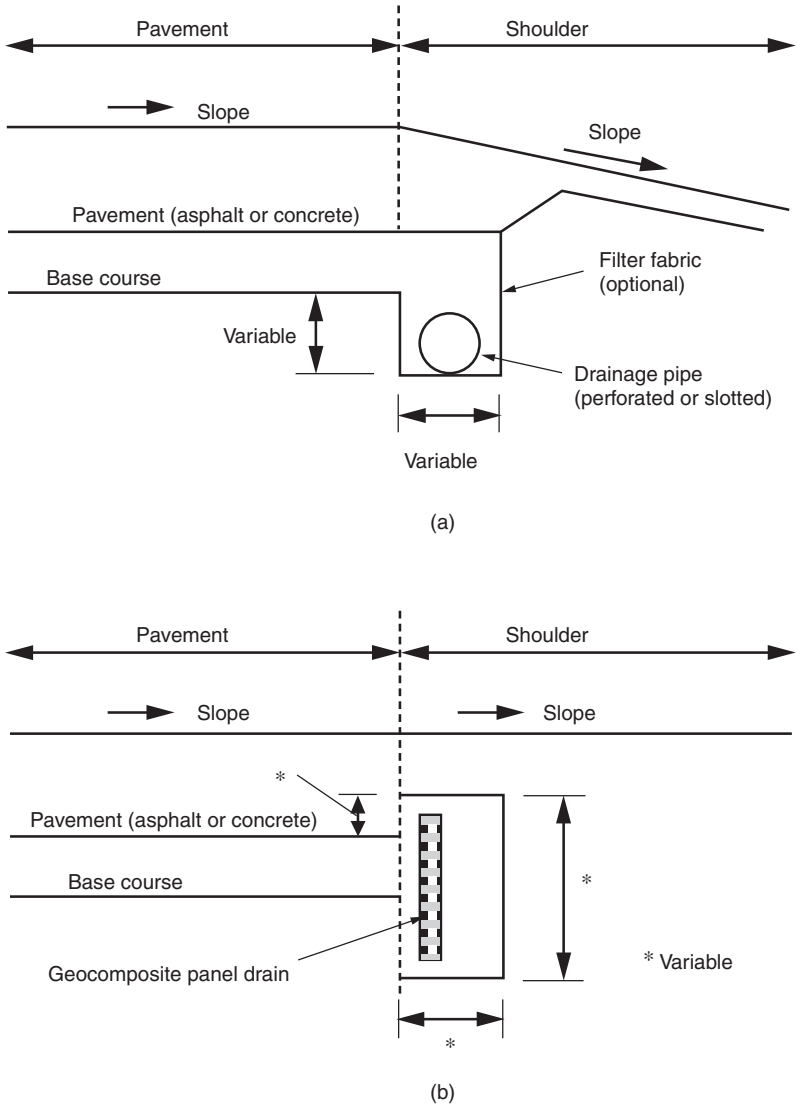

FIGURE 5.10 Typical pavement edge drains. (*a*) Pipe edge drain; (*b*) geocomposite panel drain.

5.5 HYDRAULIC DESIGN OF CULVERTS

Culverts convey surface flow from one side of the roadway to the other. Culvert design comprises three general considerations: culvert size, location, and shape. The size of the culvert is directly related to the results of the hydrologic investigation. The location of the culvert is derived from the site geometry and comprises the alignment, length, and

www.EngineeringEBooksPdf.com

slope. The site hydraulics and available roadway fill height (height of fill from creek bed to profile grade) are the controlling criteria for determining the shape of the culvert. However, shapes, sizes, and material types used for culvert construction can be precluded from use based on manufacturing limitations. Since only the site hydrology and geometrics are known and all other parameters are variable, a trial and selection process must be used to determine the appropriate culvert size and type.

5.5.1 General Considerations

The most common materials used are concrete, steel, aluminum, and plastic. The material used may affect the hydraulic capacity of the culvert, as different materials and wall configurations have different entrance loss coefficients and coefficients of roughness. The choice of the material is often controlled by structural and durability considerations.

The inlet configuration generally has a direct effect on the hydraulic capacity of the culvert and the backwater upstream from the site. The natural channel approaching the culvert is usually wider than the culvert, and thus the inlet operates as a flow contraction and can be the control for determining the hydraulic capacity. In many instances, the culvert is designed to operate hydraulically with the inlet submerged. This is one advantage that culverts have over bridges, which are designed for freeboard between the high-water elevation and the soffit. If the inlet provides for a gradual transition from the wider natural channel to the narrower culvert barrel, energy losses can be limited. Figure 5.11 depicts some common transitions used to improve culvert hydraulics. Some of the common end treatments used at inlets and outlets include projecting ends, mitered ends, flared ends, and headwalls and wingwalls.

Projecting ends exist when the barrel of the culvert extends out from the face of the embankment. This is probably the least expensive but most hydraulically inefficient of the listed end treatments. It is unsightly, is potentially hazardous to traffic, and can induce scour damage. For these reasons its use should be limited to smaller culverts.

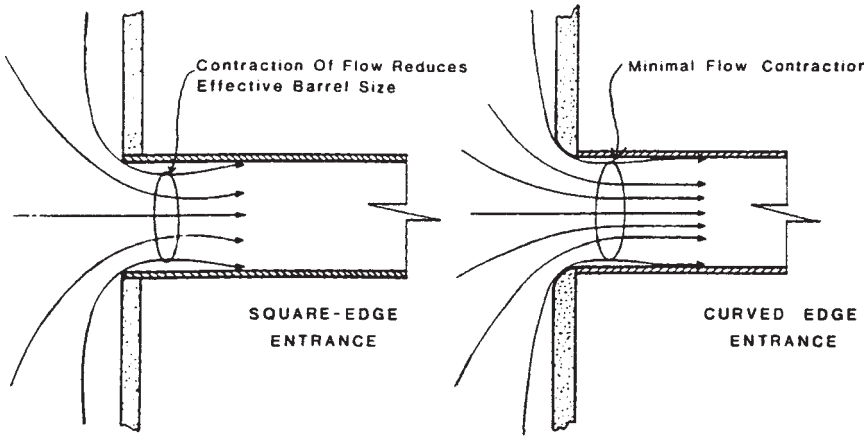

(a)

FIGURE 5.11 Illustration of common transitions that improve culvert hydraulics. (*a*) Entrance contraction. (*b*) Side-tapered inlet. (*c*) Slope-tapered inlet. (*From "Hydraulic Design of Highway Culverts," Hydraulic Design Series No. 5, FHWA, with permission*)

www.EngineeringEBooksPdf.com

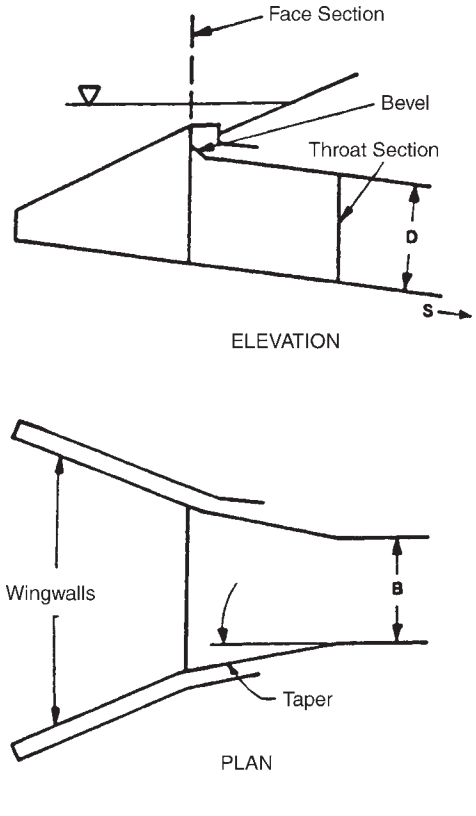

(b)

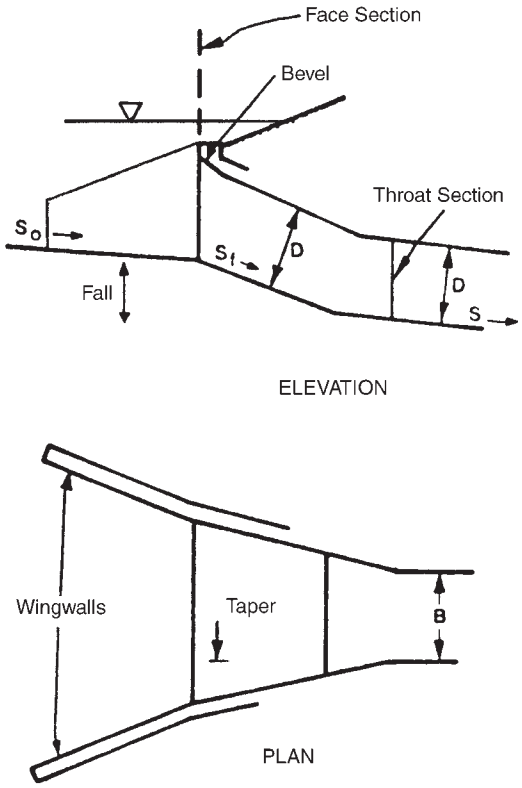

(c)

FIGURE 5.11 (*Continued*)

www.EngineeringEBooksPdf.com

Mitered ends exist where the culvert is formed or manufactured to be in the same plane as the embankment. Mitered ends, when compared with projected ends, are more aesthetically pleasing. However, the projected end is structurally more stable and the mitered end may require the addition of a headwall to compensate for this instability. The hydraulic efficiency of both the mitered and the projected inlets is approximately the same.

Flared ends are generally precast or prefabricated for use with concrete, corrugated steel or aluminum, and plastic pipes. They are used to retain the earth embankment and provide a hydraulic efficiency comparable to that of a headwall.

Headwalls and wingwalls are usually cast-in-place structures. They are designed to retain the embankment, improve hydraulics, prevent erosion, and, in larger-diameter flexible structures, provide support at the inlet and outlet ends. Retaining the earth has an economic benefit for larger structures in that the culvert may be shortened, thereby providing cost savings. The hydraulics may be improved by skewing or warping the wingwalls to provide for a smooth transition between the wider channel and the narrower barrel.

The preferred location of the culvert is in the natural streambed. This alignment usually provides for efficient inlet and outlet configurations and keeps construction costs to a minimum by limiting excavation and backfill work. Aligning the culvert in this manner can result in an inordinately long structure if the natural channel is on a high skew (over 45º) with respect to the roadway. This may be avoided by realigning the channel so that the culvert is placed perpendicular to the highway, but this may lead to erosion and siltation problems. Erosion may occur where the channel is angled to provide for the perpendicular crossing. Siltation may occur as the slope is necessarily reduced because the flow travels a longer distance to traverse the roadway. If a perpendicular culvert crossing is determined to be appropriate, it should be aligned so that the necessary channel realignment occurs downstream of the roadway embankment.

5.5.2 Inlet and Outlet Control

There are two types of flow in culverts: inlet control and outlet control. Accurate prediction of the condition of flow is difficult, and an assumption of the most conservative control may at times be warranted. Figures 5.12 and 5.13 depict several conditions of inlet and outlet control.

For inlet control, the discharge capacity is controlled at the upstream or inlet end. Factors that have an effect on the culvert performance under this condition are the headwater elevation, the inlet area of the barrel, and the inlet configuration. For outlet control, the discharge is controlled at the downstream end. Additional factors affecting performance under this condition include the tailwater elevation, characteristics of the culvert barrel (slope, length, roughness, shape, and cross-sectional area), and the outlet configuration.

With inlet control, the culvert usually flows only partially full; the roughness, slope, length, and outlet condition of the culvert do not affect the discharge capacity. The headwater depth is measured from the invert. The inlet area is generally the same as the cross-sectional area of the barrel. However, when tapered or beveled inlets are utilized, the face area is enlarged and the control area is at the throat. The efficiency of a culvert is greatly affected by the inlet configuration and may be heightened by the use of beveled edges and tapered inlets, which reduce the contraction of the flow, thereby effectively enlarging the face area. Bevels are large chamfers or rounded corners at the inlet. Tapered inlets may be tapered either at the sides or at the bottom (slope tapers). Either type will increase the flow capacity or, conversely, decrease the headwater elevation for a given capacity. Prior to their use, the cost of the improved inlet should be compared with the savings from the use of a smaller barrel.

www.EngineeringEBooksPdf.com

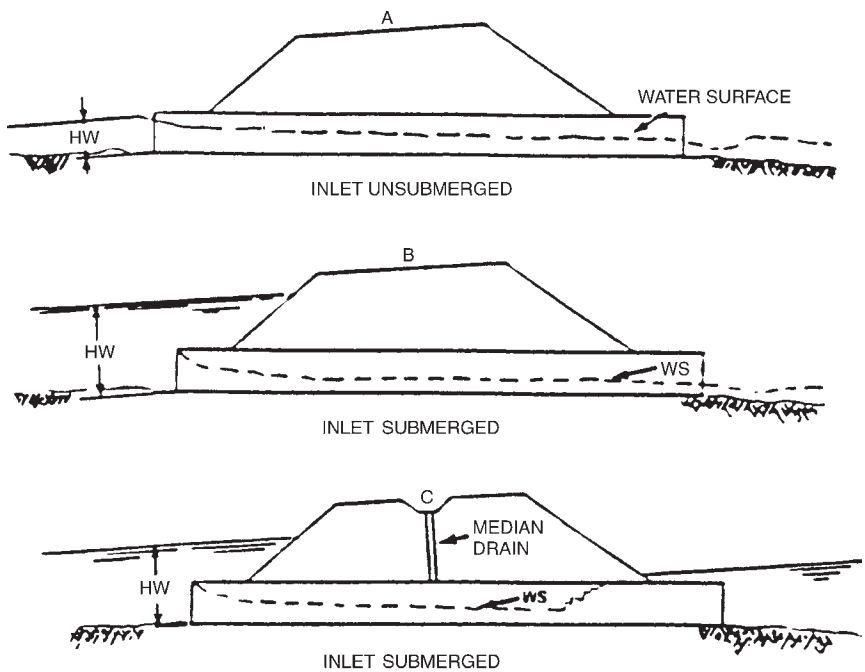

FIGURE 5.12 Illustration of culvert under inlet flow control. (*From* Highway Drainage Guidelines, *Vol. IV, American Association of State Highway and Transportation Officials, Washington, D.C., 1999, with permission*)

The coefficient k_e, which represents the efficiency of the culvert inlet, is listed in Table 5.9 for many different designs. It may be used to calculate the head loss at the entrance from the equation

$$H_e = k_e\left(\frac{V^2}{2g}\right) \tag{5.21}$$

where H_e = entrance head loss, ft (m)
k_e = energy coefficient
V = velocity, ft/s (m/s)
g = acceleration of gravity, 32.2 ft/s^2 (9.8 m/s^2)

Extensive research by the Bureau of Public Roads and later work by the Federal Highway Administration established a series of equations for determining the headwater at a culvert entrance. In addition, a series of nomographs for the solution of the equations for the various culvert materials were prepared. This information is available in the FHWA publication HDS 5, "Hydraulic Design of Highway Culverts." The charts in HDS 5 are arranged in groups according to shapes and materials. The charts include the types, materials, and inlet configurations listed below:

1. Circular concrete pipe with both square-edge and groove-edge inlets
2. Circular corrugated metal pipe

www.EngineeringEBooksPdf.com

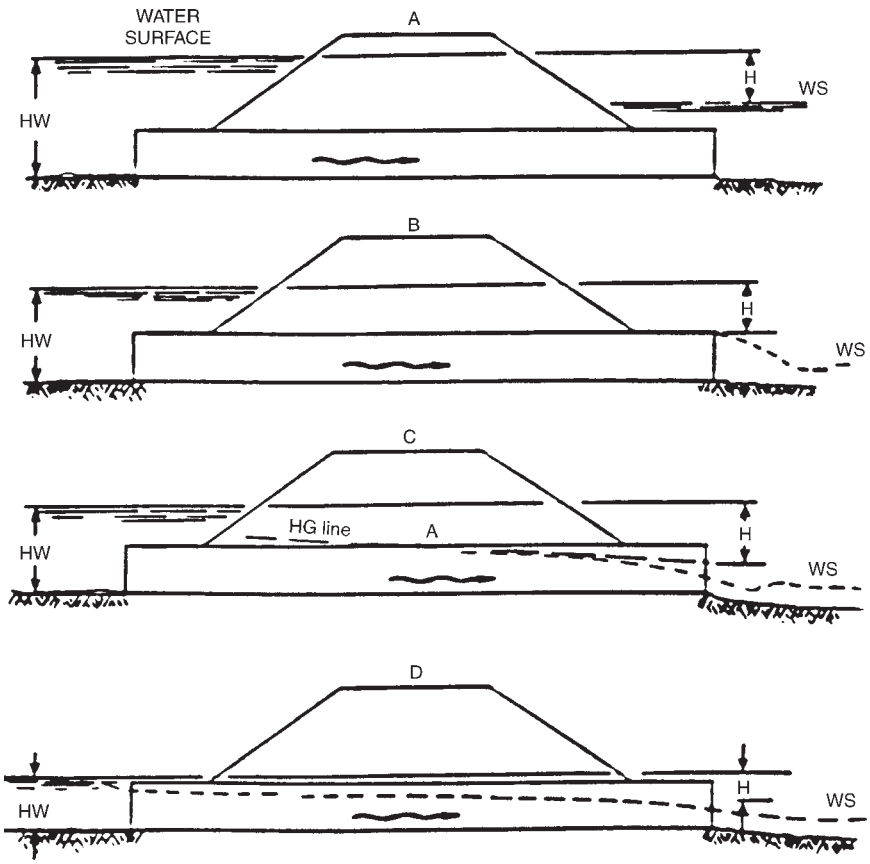

FIGURE 5.13 Illustration of culvert under outlet flow control. (*From* Highway Drainage Guidelines, *Vol. IV, American Association of State Highway and Transportation Officials, Washington, D.C., 1999, with permission*)

3. Concrete boxes with headwalls or wingwalls, with or without beveled or chamfered inlets
4. Corrugated metal box culverts with earth, concrete, or metal inverts
5. Horizontal and vertical elliptical concrete pipe with both square-edge and groove-edge inlets
6. Corrugated metal pipe-arch
7. Corrugated metal structural plate pipe-arch with 18-in (450-mm) and 30-in (750-mm) corner radii
8. Corrugated metal arch culverts with earth, concrete, or metal inverts
9. Various shapes of structural plate long-span culverts
10. Various shapes of culverts with slope-tapered and side-tapered improved inlets

www.EngineeringEBooksPdf.com

TABLE 5.9 Entrance Loss Coefficients for Culverts under Outlet Control, Flowing Full or Partly Full

Type of structure and design of entrance	Coefficient k_e
Pipe, concrete	
Projecting from fill, socket end (groove end)	0.2
Projecting from fill, square-cut end	0.5
Headwall or headwall and wingwalls	
Socket end of pipe (groove end)	0.2
Square edge	0.5
Rounded, radius = (1/12)D	0.2
Mitered to conform to fill slope	0.7
End section conforming to fill slopes*	0.5
Beveled edges, 33.7° or 45° bevels	0.2
Side- or slope-tapered inlet	0.2
Pipe, or pipe-arch, corrugated metal	
Projecting from fill (no headwall)	0.9
Headwall or headwall and wingwalls, square edge	0.5
Mitered to conform to fill slope, paved or unpaved slope	0.7
End section conforming to fill slope*	0.5
Beveled edges, 33.7° or 45° bevels	0.2
Side- or slope-tapered inlet	0.2
Box, reinforced concrete	
Headwall parallel to embankment (no wingwalls)	
Square-edged on 3 edges	0.5
Rounded on 3 edges to radius of 1/12 barrel dimension, or beveled edges on 3 sides	0.2
Wingwalls at 30° to 15° to barrel	
Square-edged at crown	0.4
Crown edge rounded to radius of 1/12 barrel dimension, or beveled top edge	0.2
Wingwall at 10° to 25° to barrel	
Square-edged at crown	0.5
Wingwalls parallel (extension of sides)	
Square-edged at crown	0.7
Side- or slope-tapered inlet	0.2

*"End section conforming to fill slope," made of either metal or concrete, is the section commonly available from manufacturers. From limited hydraulic tests it is equivalent in operation to a headwall in both *inlet* and *outlet* control. Some end sections, incorporating a *closed* taper in their design, have a superior hydraulic performance. These latter sections can be designed using the information given for the beveled inlet.

Source: From *Hydraulic Design of Highway Culverts,* HDS 5, FHWA, with permission.

The charts may also be used for plastic pipes. The appropriate chart selection should be based on a comparative entrance configuration and barrel roughness.

The reader is urged to obtain a copy of this document since it is the primary method used for culvert design and the nomographs it contains are an indispensable design aid.

If a culvert operates under outlet control with a free-water surface along the entire length of the culvert, the nomographs should not be used. In lieu of the nomographs, a backwater calculation should be performed.

www.EngineeringEBooksPdf.com

5.5.3 Allowable Headwater Depth

The allowable headwater depth is the depth of ponded water permitted at the entrance to a culvert. Allowable headwater depths are generally classified as either physical controls or arbitrary controls.

Physical headwater controls are topographic features that should be protected against periodic inundation. They include the roadway pavement and upstream productive property or structures. Additionally, high points between adjacent watersheds should typically be used as physical headwater controls. The use of a watershed break elevation as a headwater control will protect against the unnecessary diversion of runoff from a watershed to an adjacent watershed.

Arbitrary headwater controls are typically used to ensure the efficient operation of the culvert while protecting the roadway embankment from erosion and subsequent washout. The control may be a function of either the design flood or the base flood. Typical limits include a percentage of the barrel diameter or rise such as $1.2D$ or 120 percent of the barrel diameter or rise, or a permitted depth of ponding above the barrel such as $D + 2$ ft. Greater depths of ponding for the base flood are typically permitted. Large-span structures usually have more restrictive limitations.

5.5.4 Size Determination for Culverts with Inlet Control

Once the design discharge and allowable headwater are determined and the culvert alignment and slope decided upon, an efficient culvert size may be found through the use of nomographs as shown in "Hydraulic Design of Highway Culverts," Hydraulic Design Series 5, FHWA.

An example of an inlet control nomograph is shown in Fig. 5.14. Since the structure size is not known, the design is an iterative process. To use the chart, the trial culvert size and inlet configuration, design discharge, allowable headwater depth, culvert length, and culvert slope must be known. The relationship of the inlet control headwater to the diameter or height of the culvert (HW/D) is read directly from the inlet control nomograph by extending a line from the culvert size scale (left scale) through the discharge/bottom width ratio scale (center scale) to the scale of the headwater depth in terms of height (right scale). The inlet control headwater equals this value multiplied by D. For example, assume a 5-ft $\times$ 2-ft box culvert with the design storm, Q, equal to 75 ft^3/s. The nomograph shows that HW/D = 1.75, 1.90, or 2.05, depending upon the inlet configuration. By multiplying these values by the box rise of 2 ft, the corresponding headwater depths are found to be 3.5 ft, 3.8 ft, and 4.1 ft, respectively. (Note: To use the chart with SI units, first convert from SI units to U.S. Customary units—1 ft = 0.305 m, 1ft^3/s = 0.0283 m^3/s).

5.5.5 Size Determination for Culverts with Outlet Control

The headwater depth for a culvert operating under outlet control may be determined with the aid of the outlet control nomographs in HDS 5. An example of these nomographs for box culverts is shown in Fig. 5.15. The following procedure may be used to determine the head H from the nomographs. The length L (ft), entrance coefficient k_e, and design discharge must be known. Locate L on the appropriate k_e curve, and connect this point with the proposed culvert size. Locate the design discharge and extend a line from that point through the turning point intersection of the previous line to read the

www.EngineeringEBooksPdf.com

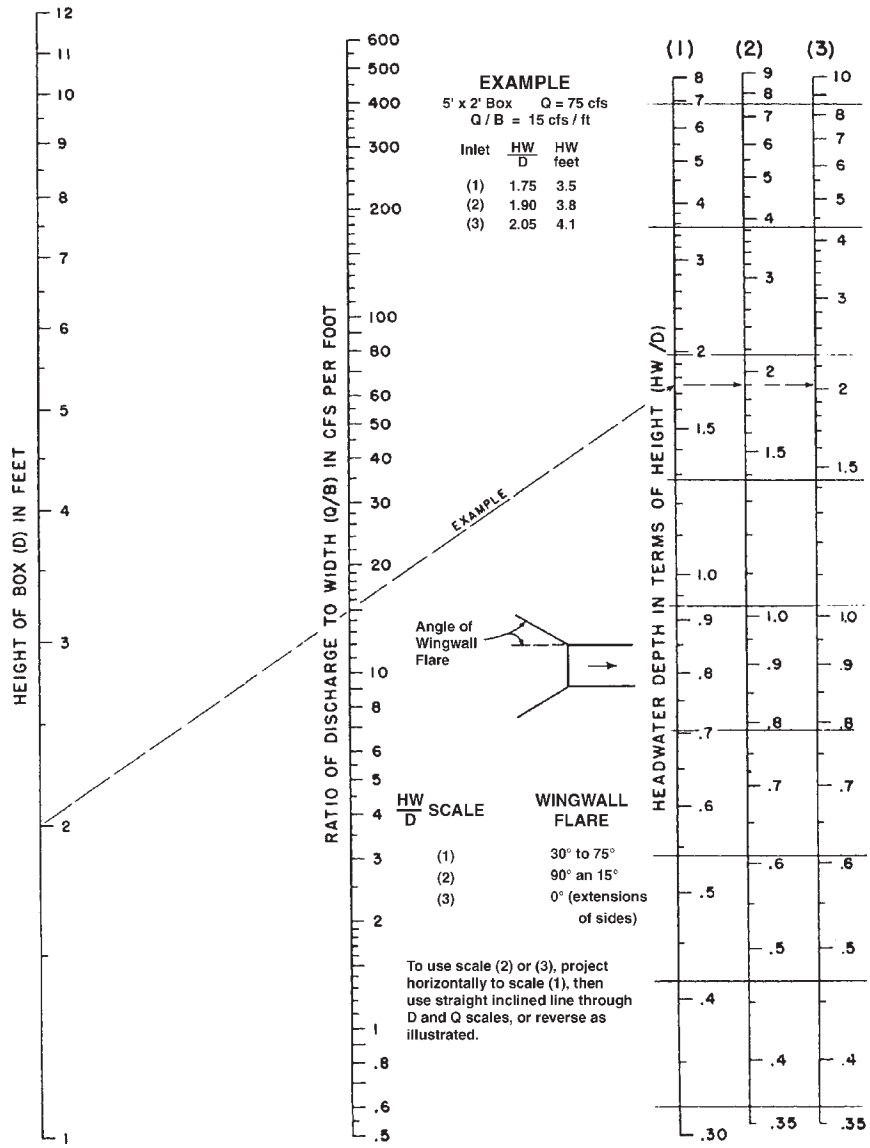

FIGURE 5.14 Flow nomograph for box culvert under inlet control. (*From "Hydraulic Design of Highway Culverts," HDS 5, FHWA, with permission*)

value of the head H (ft) on the right. For example, assume $L = 306$ ft, $k_e = 0.5$, a 2-ft × 2-ft box, and $Q = 40$ ft^3/s. The nomograph shows that $H = 7.3$ ft. The headwater depth, HW, may then be determined by geometry from the equation

$$\text{HW} = H + h_o - LS_o \tag{5.22}$$

www.EngineeringEBooksPdf.com

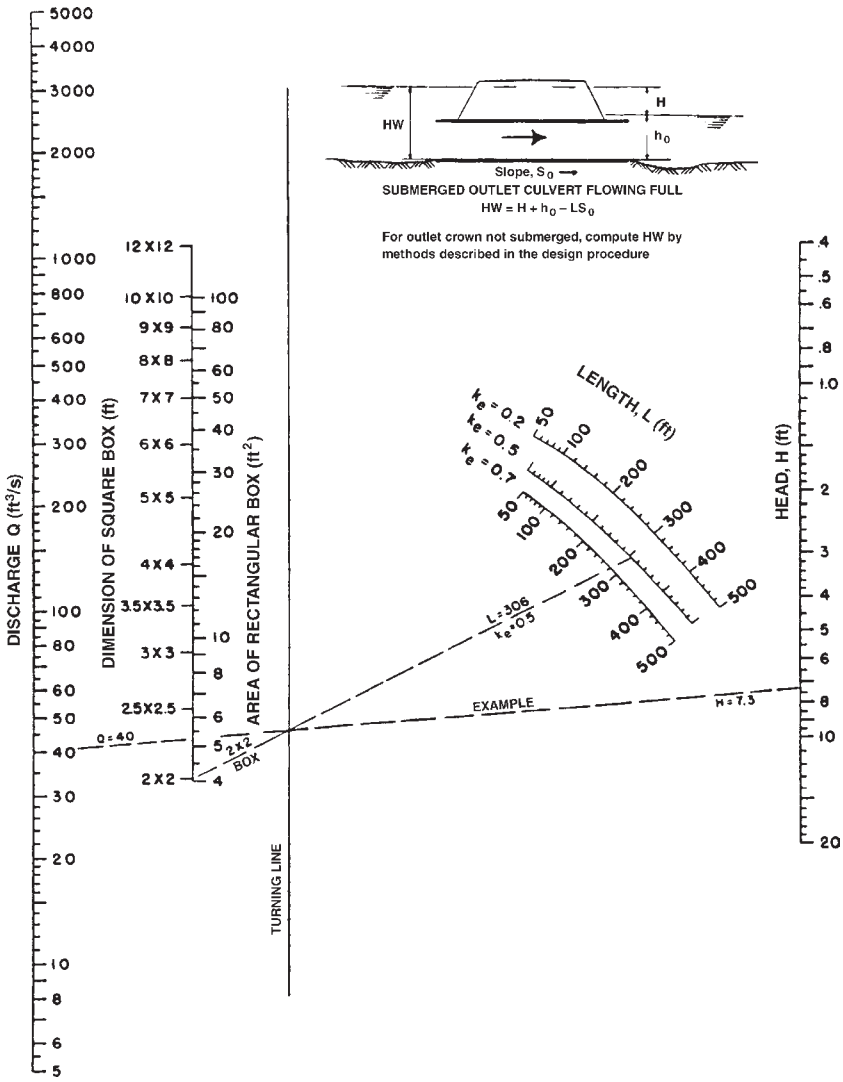

FIGURE 5.15 Flow nomograph for box culvert under outlet control with $n = 0.012$. (*From "Hydraulic Design of Highway Culverts," HDS 5, FHWA, with permission*)

where the terms are defined by the inset figure in the nomograph. (Note: To use the chart with SI units, first convert from SI units to U.S. Customary units—1 ft = 0.305 m, 1 ft^2 = 0.0929 m^2, 1ft^3/s = 0.0283 m^3/s). Where the outlet is submerged, h_o is equal to the tailwater depth just downstream of the outlet and may be calculated from Manning's equation as applied to the channel. Where the outlet is not submerged, h_o is equal to the greater of the tailwater depth or one-half of the sum of the culvert height plus the critical depth, $(d_c + D)/2$. By examining different alternatives, a culvert can be selected that provides the required flow within the allowable headwater depth.

www.EngineeringEBooksPdf.com

5.5.6 Critical Depth Determination

The critical depth for various culvert cross-sections may be found from charts in HEC 5. An example is given in Fig. 5.16 for a rectangular section. In this case, the ratio of the flow Q (ft^3/s) to the width B (ft) is used to find the critical depth d_c (ft). Of course, d_c cannot exceed the depth of the box section.

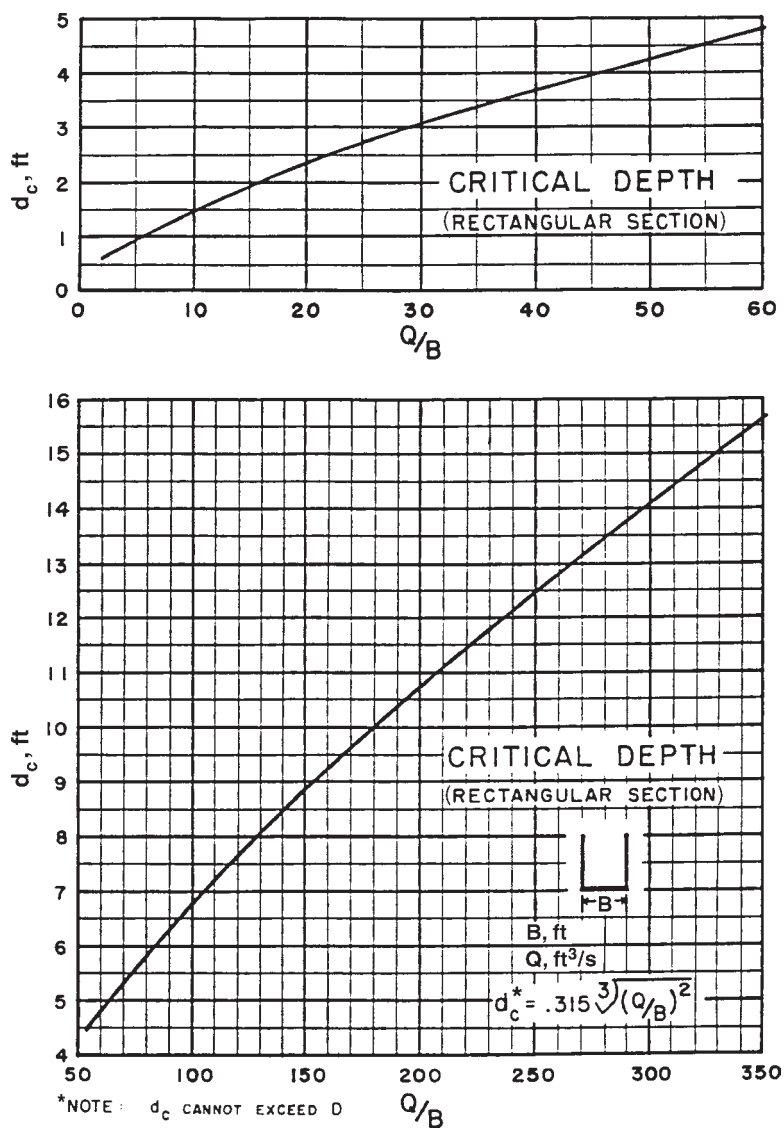

FIGURE 5.16 Critical depth for flow in rectangular channel. (*From "Hydraulic Charts for the Selection of Highway Culverts," Hydraulic Engineering Circular No. 5, FHWA, with permission*)

www.EngineeringEBooksPdf.com

5.5.7 Size Determination for Long-Span Structures

Because culvert shapes are so numerous and new shapes are often developed, design charts showing performance curves are not available for all culvert sizes and shapes. One example is long-span corrugated-metal sectional plate structures. Although the product is available in several cross-sectional shapes, performance curves are available only for circular or elliptical cross-sections (Fig. 5.17) and high- and low-profile arches (Fig. 5.18). These charts, which are for inlet control only, address four different inlet configurations ranging from mitered to beveled-edge ends. Because long-span structures are commonly used when headroom is low, they generally do not flow under head at design discharge but flow partly full.

The first step in using these charts is to obtain information on available sizes, including cross-sectional area A (ft^2) and vertical height D (ft). For the design discharge Q (ft^3/s), calculate $Q/AD^{0.5}$ and read the value of HW/D at the intersection of the appropriate edge condition curve. Multiply by the depth (height) of the structure (D) to obtain the headwater depth HW and compare with the allowable design value. To consider a long-span structure under outlet control, an analysis including pressure flow and backwater calculation can be made. (See "Hydraulic Design of Highway Culverts," HDS 5, FHWA.) The inlet and outlet control headwater elevations are then compared. The higher value is compared against the allowable elevation to determine if the size is satisfactory or if the process should be repeated.

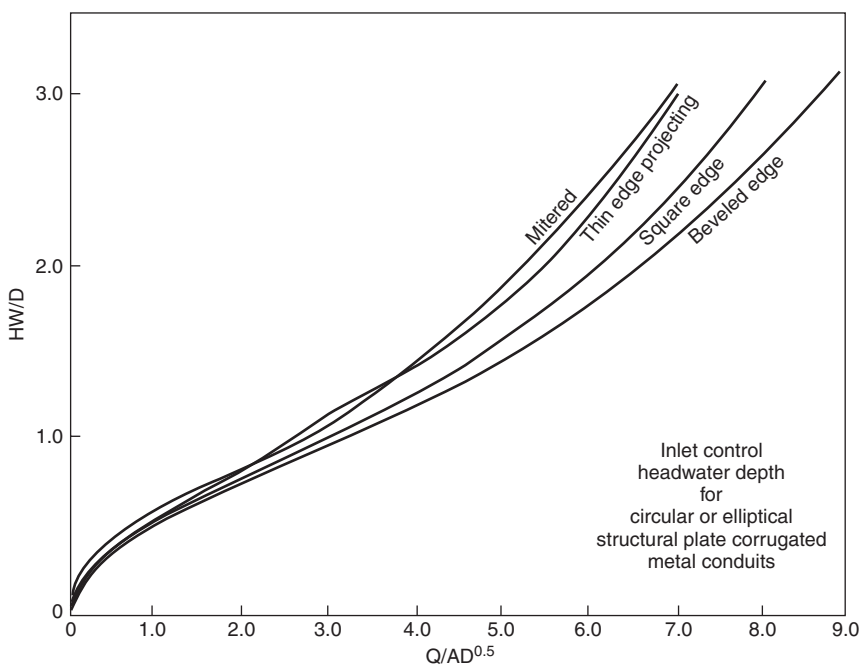

FIGURE 5.17 Performance charts for circular or elliptical structural-plate conduits under inlet flow control. (*From "Hydraulic Design of Highway Culverts," Hydraulic Design Series No. 5, FHWA, with permission*)

www.EngineeringEBooksPdf.com

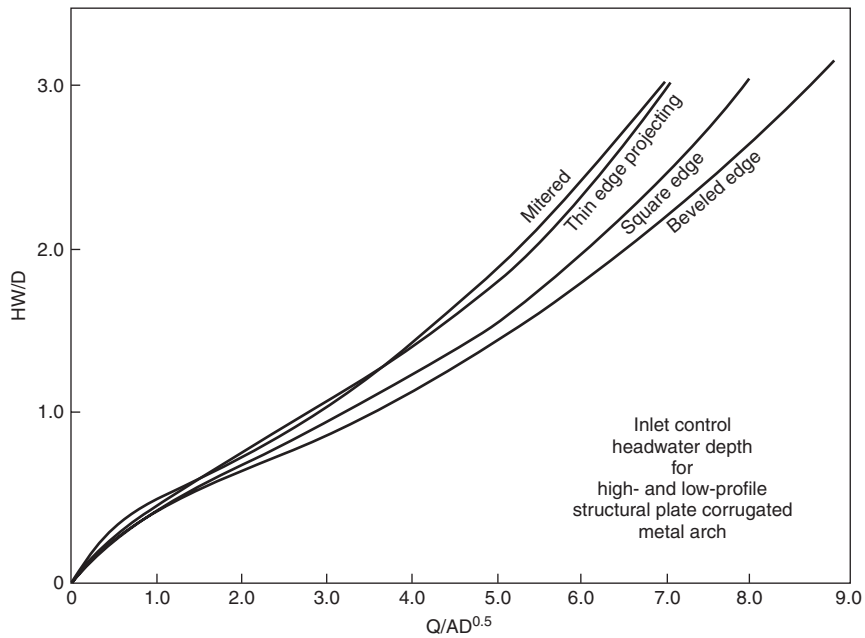

FIGURE 5.18 Performance charts for high- and low-profile structural-plate arches under inlet flow control. (*From "Hydraulic Design of Highway Culverts," Hydraulic Design Series No. 5, FHWA with permission*)

5.5.8 Discharge Velocity and Energy Dissipation

Because of its hydraulic characteristics, the outlet velocity of a culvert is usually higher than the velocity in the discharge channel. The outlet velocity may be calculated either using Manning's equation, Eq. (5.11), if the culvert is under inlet control, or by dividing the discharge by the cross-sectional area of the flow if under outlet control. Under outlet control, if the tailwater is above the crown of the pipe, or if the discharge is high enough to result in a critical depth equal to the depth of the culvert barrel, then the flow area may be taken as the area of the barrel. If the tailwater depth is low, the area of flow, and thus the velocity, may be determined using the chart in Fig. 5.19 or 5.20. To use these charts, first calculate the normal depth or tailwater TW (ft) in the channel; the ratio TW/D, where D is the structure height (ft); and the flow parameter $Q/BD^{3/2}$, where B (ft) is the width of the barrel and Q (ft^3/s) is the discharge. Enter the chart with TW/D and find Y_o/D at the intersection of the appropriate curve. Multiply by D to determine the depth of flow at the outlet end of the culvert, Y_o. The flow area is then calculated for Y_o and the velocity for the flow Q from the continuity equation, Eq. (5.10).

Recommended maximum channel velocities were presented in Table 5.5. The velocity at the outlet should be kept at or below these values, or, if this is not possible, the channel should be protected from erosion. The controlling parameters for the culvert velocity are its slope and roughness. If the recommended velocity is exceeded, consider decreasing the slope or using a culvert with a greater roughness coefficient.

www.EngineeringEBooksPdf.com

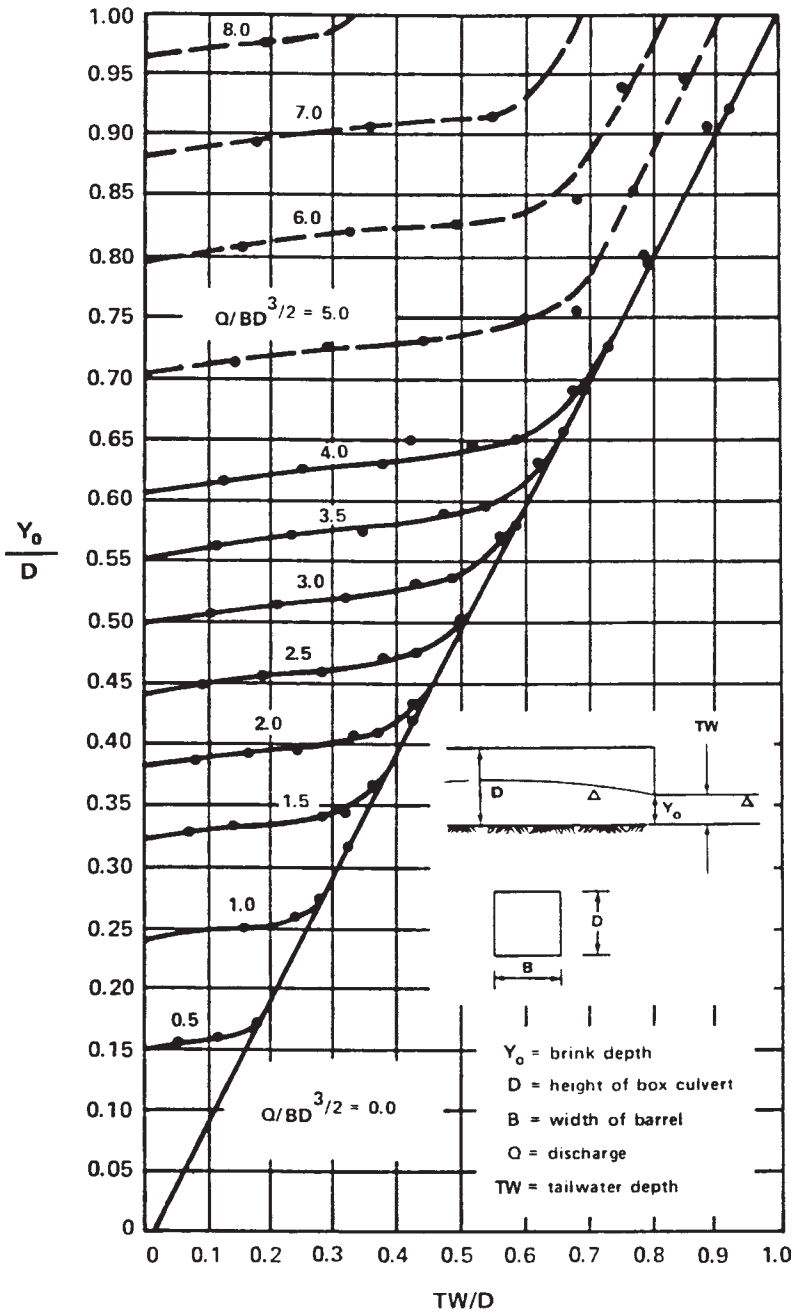

FIGURE 5.19 Dimensionless rating curves for outlets of rectangular culverts on horizontal and mild slopes. (*From "Hydraulic Design of Energy Dissipators for Culverts and Channels," Hydraulic Engineering Circular No. 14, FHWA, with permission*)

www.EngineeringEBooksPdf.com

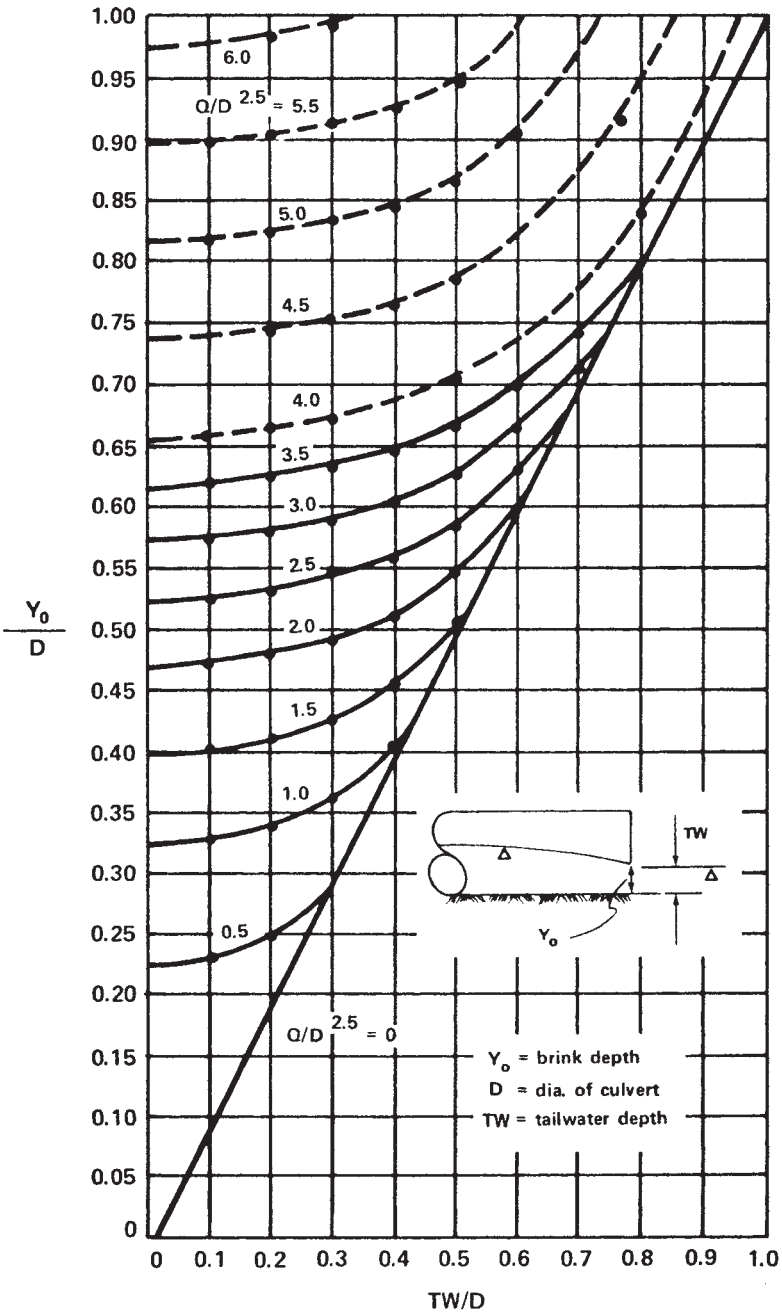

FIGURE 5.20 Dimensionless rating curves for outlets of circular culverts on horizontal and mild slopes. (*From "Hydraulic Design of Energy Dissipators for Culverts and Channels," Hydraulic Engineering Circular No. 14, FHWA, with permission*)

www.EngineeringEBooksPdf.com

If the velocity at the outlet cannot be reduced by these means, channel protection or energy dissipaters should be used to protect against erosion. Channel protection may consist of treatments such as concrete aprons or cutoff walls. In some cases, concrete or rock riprap may be required. These types of protection do not necessarily dissipate the energy, but protect against erosion. Energy-dissipating devices may be necessary either separately or in conjunction with channel protection where flow velocities are high. Dissipation devices, if used, are generally located at the outlet end or in the interior near the end of the culvert. If such devices are used, consideration must be given to the effects on possible debris collection. (See "Hydraulic Design of Energy Dissipators for Culverts and Channels," HEC 14, FHWA.)

5.6 CULVERT TYPES AND MATERIALS

The main types of pipe used in highway construction are concrete pipe, metal pipe (steel or aluminum), and plastic pipe (high-density polyethylene and polyvinyl chloride). They are available in a wide array of sizes, shapes, and properties. Table 5.10 gives the ASTM and AASHTO standards for the most common highway drainage pipes. Some of the characteristics of these pipes are reviewed below.

5.6.1 Concrete Pipe

Concrete pipe is manufactured as nonreinforced, reinforced, or cast-in-place pipe; as box culverts and special shapes; and as field-constructed pipe. Shapes, as shown in Fig. 5.21, include round, horizontal and vertical ellipse, and arch configuration.

Factory-Made Pipe. Nonreinforced pipe is used for smaller diameters, whereas pipe with steel reinforcement is used for larger diameters and greater loads. Both are manufactured in a plant, cured, and shipped to the job site. They are furnished in relatively short lengths and coupled with a bell-and-spigot or tongue-and-groove type joint.

Nonreinforced concrete pipe is available in diameters from 4 to 36 in (100 to 900 mm) and three strength classes. Nonreinforced concrete pipe is available as round pipe only. Reinforced concrete pipe is available in diameters from 12 to 144 in (300 to 3600 mm). The strength of reinforced concrete pipe can be specified according to five standard pipe classes (ASTM C 76), with Class I pipe being the most economical and Class V offering the greatest structural strength; according to required *D*-load strength (ASTM C 655); or according to a direct wall design (ASTM C 1417). Wall thickness of reinforced concrete pipe can be varied to meet in-field conditions. The standard "class" specifications for pipe give wall thickness according to three distinct types, which vary from Wall A, being the thinnest, to Wall C, being the thickest.

Steel reinforcing for reinforced concrete pipe can be arranged in many combinations to meet the given structural requirements. Figure 5.22 shows some of the steel reinforcement layouts used in manufacturing reinforced concrete pipe.

Cast-in-Place Pipe. This type of nonreinforced pipe is formed in a trench using a continuous process. First a trench is excavated so that it has a semicircular bottom and vertical or near vertical sidewalls, which serve as the outer form for the bottom and sides. The upper portion of the pipe is cast against an inner arch form as illustrated in Fig. 5.23. The form is pulled along the trench while concrete is poured into a hopper

www.EngineeringEBooksPdf.com

TABLE 5.10 Standards for Common Drainage Pipes

Type of pipe	ASTM Standard	AASHTO Standard
Vitrified clay pipe		
Vitrified clay pipe	C 700	M 65
Concrete pipe		
Nonreinforced, circular	C 14, C 985	M 86
Reinforced, circular	C 76, C 655, C 1417	M 170
Reinforced, elliptical	C 507	M 207
Reinforced, arch	C 506	M 206
Reinforced, box	C 1433	M 259, M 273
Reinforced, three-sided	C 1504	
Corrugated steel pipe		
From metallic-coated sheet	A 760	M 36
From zinc-coated structural plate	A 761	M 167
From polymeric-coated sheet	A 762	M 245
Postmanufacture applied coatings	A 849, A 862	M 190
Box culverts	A 964	
Corrugated aluminum pipe		
From sheet	B 745	M 196
From structural plate	B 746	M 219
Box culverts	B 864	
Plastic pipe		
PVC (polyvinyl chloride)	D 1785	
PVC	D 2665	
PVC	D 3034	
PVC	F 679	
PVC	F 789	
PVC	F 891	
PVC	F 949	
PVC		M 304
ABS PVC composite	D 2680	M 264
ABS (acrylonitrile-butadiene-styrene)	D 2661	
ABS	D 2751	
PE (polyethylene)	F 405	
PE	F 667	
PE	F 714	
PE	F 892	
PE	F 894	
PE		M 252
PE		M 294

located above. Powered spading mechanisms and variable-speed vibrators aid the flow of the concrete.

Box Culverts. Box culverts are rectangular shapes with flat sides, top, and bottom. These shapes are constructed with steel reinforcement. Factory-made boxes are shipped in sections 4 to 8 ft (1200 to 2400 mm) long and joined in the field to make a structure of the required length.

Precast Three-Sided Culverts. Three-sided culverts, sometimes called "three-sided box culverts," are rectangular in shape. These shapes are constructed with steel reinforcement

www.EngineeringEBooksPdf.com

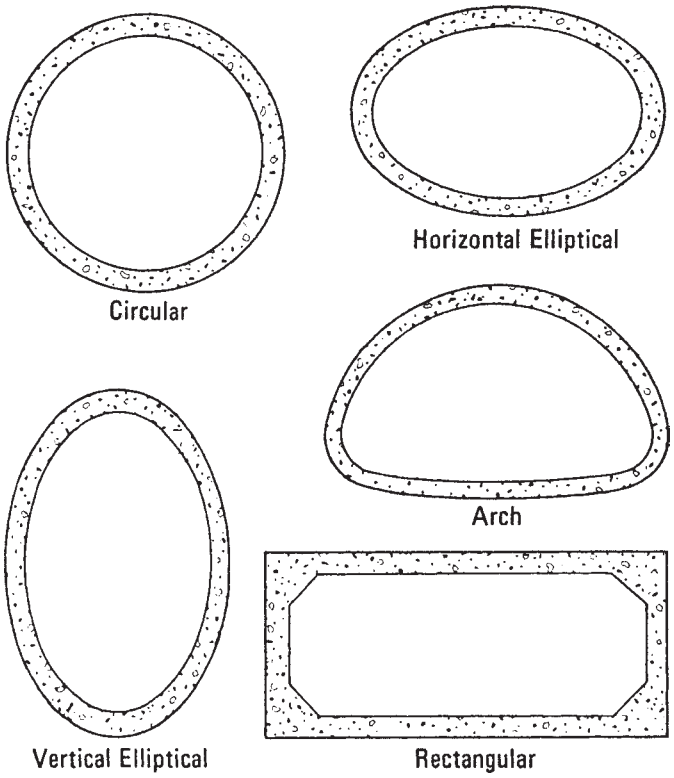

FIGURE 5.21 Concrete pipe is manufactured in five common shapes; regional custom and demand usually determine availability. (*From* Concrete Pipe Handbook, *American Concrete Pipe Association, 1988, with permission*)

that may or may not be pretensioned. They are available in spans between 12 and 34 ft (3.7 and 10.4 m), and rises up to 10 ft (3 m). These structures usually have an open bottom and are constructed on concrete footings.

Special Shapes. Other shapes are also manufactured. One example is a reinforced concrete section made up of an arch top and vertical sidewalls. Another example is a reinforced concrete arch that can be fabricated in either one or two piece segments. Both examples are joined in the field to make up the required length. With spans of 12 to 84 ft (3.7 to 25 m) or larger they are suitable as replacement structures for short span bridges. Additionally, segmental tunnel liners can be furnished as precast concrete segments.

Field-Constructed Pipe. Large reinforced structures may be constructed at the job site using appropriate formwork. Large arches and box culverts are often constructed in this manner.

www.EngineeringEBooksPdf.com

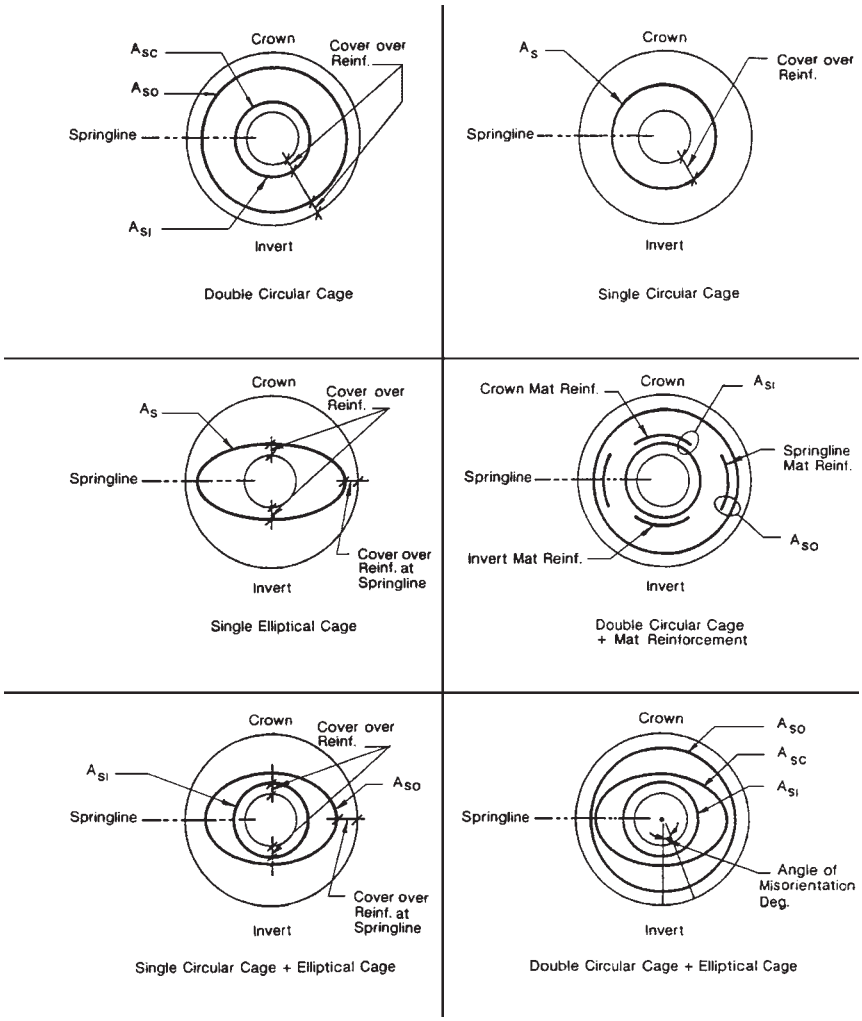

FIGURE 5.22 Concrete pipe culvert reinforcement notation. (*From PIPECAR: User and Programmer Reference Manual, FHWA, 1989, with permission*)

5.6.2 Steel and Aluminum Pipe

Numerous drainage products are available in steel with protective coatings and in aluminum. These include corrugated pipe, spiral-rib pipe, structural-plate pipe, box culverts, and, where a tunnel is required, tunnel liner plates. Figure 5.24 shows the variety of profiles available for the wall cross-section of steel drainage products. For additional profiles, see "Corrugated Steel Pipe Design Manual," National Corrugated Steel Pipe Association, 2008. The arc-and-tangent profiles shown with depths of ¼ through 1 in (6.5 through 25 mm) are wall profiles for pipe factory-corrugated to the full pipe

www.EngineeringEBooksPdf.com

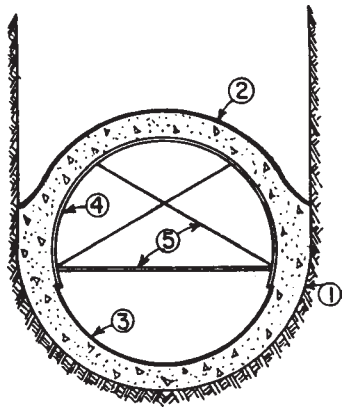

FIGURE 5.23 Cross-section of cast-in-place concrete pipe showing form components. (*From Lynch Manual,* Cast-in-Place Concrete Process, *W. M. Lynch Co., Dixon, Calif., 1990, with permission*)

cross-section. The 2-in-deep (51-mm) profile, which is used for structural-plate pipe and box culverts, is corrugated and curved into arc segments that can be bolted together in the field. The 5½-in-deep (140-mm) profile is a similar product used for longer-span structures. The ¾- and 1-in-deep (19- and 25-mm) rectangular profiles are for factory-corrugated spiral-rib pipe. Figure 5.25 illustrates the shapes of the products, the range of sizes available in steel, and common uses. Some corrugation profiles and size ranges vary for aluminum products. The larger sizes of structural-plate products and box culverts in steel or aluminum are often used as replacements for short-span bridges. Factory-made box culverts are available in spans up to 26 ft (7.8 m) and even longer with special designs.

Corrugated Steel. Most of the metal pipes used are corrugated from coils of coated sheet steel. Coatings, which are applied by the continuous hot-dip process in the production of the steel coil, include zinc (galvanizing) and aluminum. In addition, coils are available precoated with a polymer (on one or both sides) to provide extra protection against corrosion and/or abrasion. Most corrugated pipes have a continuous helical lockseam, but some manufacturers use a continuous helical welded seam, or a longitudinal riveted or spot-welded seam. Wall profiles from 1½ × ¼ in (38 × 6.5 mm) to 5 × 1 in (125 × 25 mm) are factory-corrugated to the full pipe cross-section. The pipe is furnished in lengths (typically 20 ft or 6 m) and joined in the field by coupling bands. Diameters through 120 in (3000 mm) are available, depending on the wall profile. Pipe-arch shapes for installations with low cover are formed to shape from lengths of round pipe.

Corrugated Aluminum. Corrugated aluminum pipe is usually furnished with one of the following wall profiles: 1½ × ¼ in (38 × 6.5 mm), 2⅔ × ½ in (68 × 13 mm), or 3 × 1 in (75 × 25 mm). The pipe may have a helical lockseam or a riveted seam. It is furnished in lengths similar to steel pipe and joined in the field by coupling bands. Diameters through 120 in (3000 mm) are available, depending on the wall profile, and pipe-arch shapes are formed to shape from lengths of round pipe.

Spiral-Rib Pipe. This is a newer type of steel pipe that is helically corrugated to the rectangular profiles shown in Fig. 5.24. The cross-section profile has been developed so

www.EngineeringEBooksPdf.com

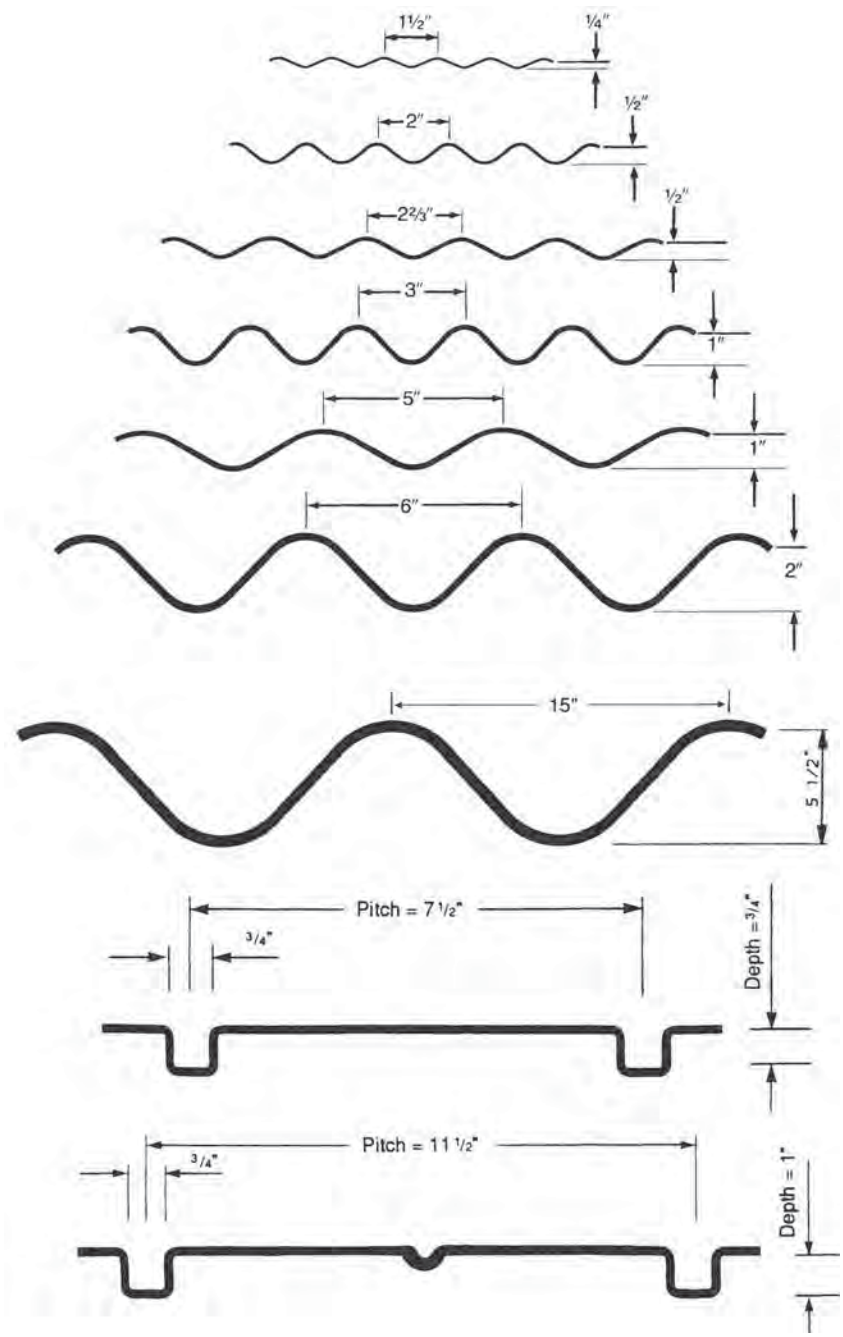

FIGURE 5.24 Profiles for corrugated steel pipe and spiral-rib pipe. Conversion: 1 in = 25.4 mm. (*From* Handbook of Steel Drainage and Highway Construction Products, *American Iron and Steel Institute, 1994, with permission*)

www.EngineeringEBooksPdf.com

Shape		Range of Sizes	Common Uses
Round	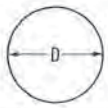	6 in.–26 ft (150 mm–7.9 m)	Culverts, subdrains, sewers, service tunnels, etc. All plates same radius. For medium and high fills (or trenches).
Vertical ellipse 5% nominal		4–21 ft (1.2–6.4 m) nominal: before elongating	Culverts, sewers, service tunnels, recovery tunnels. Plates of varying radii; shop fabrication. For appearance and where backfill compaction is only moderate.
Pipe-arch	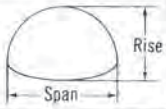	Span x Rise 17 in. x 13 in. (430 x 330 mm) to 20 ft 7 in. x 13 ft 2 in. (6270 x 4010 mm)	Where headroom is limited. Has hydraulic advantages at low flows.Corner plate radius, 18 in (457 mm) or 31 in (787 mm) for structural plate.
Underpass*	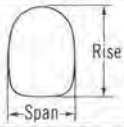	Span x Rise 5 ft 8 in. x 5 ft 9 in. to 20 ft 4 in. x 17 ft 9 in.	For pedestrians, livestock or vehicles (structural plate).
Arch	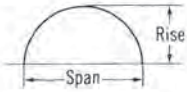	Span x Rise 6 ft x 1 ft 91/2 in. (1.8 x 0.55 m) to 25 ft x 12 ft 6 in. (7.6 x 3.8 m)	For low clearance large waterway opening, and aesthetics (structural plate).
Horizontal Ellipse	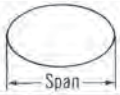	Span 7–40 ft (2.1–12 m)	Culverts, grade separations, storm sewers, tunnels.
Pear		Span 25–30 ft (7.6–9.1 m)	Grade separations, culverts, storm sewers, tunnels.
High Profile Arch	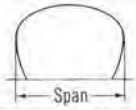	Span 20–45 ft (6.1–14 m)	Culverts, grade separations storm sewers, tunnels. Ammunition magazines, earth covered storage.
Low Profile Arch		Span 20–50 ft (6.1–15 m)	Low-Wide waterway enclosures, culverts, storm sewers.
Box Culverts	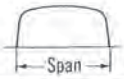	Span 8–26 ft (2.4–7.9 m)	Low-wide waterway enclosures, culverts, storm sewers.
Specials		Various	For lining old structures or other special purposes. Special fabrication.

*For equal area or clearance, the round shape is generally more economical and simpler to assemble.

FIGURE 5.25 Shapes, range of sizes, and common uses of corrugated steel drainage products. Conversions: 1 in = 25.4 mm, 1 ft = 0.305 m. (*From* Handbook of Steel Drainage and Highway Construction Products, *American Iron and Steel Institute, 1994, with permission*)

www.EngineeringEBooksPdf.com

that flow characteristics are similar to that of a smooth-walled pipe. It is available in either coated steel or aluminum, as either round pipe through 108-in (2700-mm) diameter, or as pipe-arch.

Structural-Plate Pipe. This product type is available in either zinc-coated steel or aluminum.

Steel. The 6- × 2-in (152- × 51-mm) profile used for structural-plate pipe and box culverts is corrugated and curved into arc segments. The segments provide an arc length of up to about 86 in (2184 mm), in lengths of 10 or 12 ft (3.0 to 3.7 m). The segments are joined together with high-strength bolts in a sequential manner during construction. All of the shapes illustrated in Fig. 5.25 can be constructed with this product. The 15- × 5½-in (381- × 140-mm) profile can be used for the larger structures. With spans up to about 50 ft (15 m), structural-plate structures can provide an economical alternative for replacing short-span bridges. Field coatings can be applied to enhance durability.

Aluminum. The 9-in-wide (230-mm) by 2½-in-deep (64-mm) profile is used for the aluminum structural-plate pipe and box culvert structures. Product characteristics are generally similar to those of the steel product.

Long-Span Structures. Long-span structural-plate structures are defined as having either special shapes that involve a relatively large radius in the crown or side plates, or a span that exceeds certain structural design criteria as specified in AASHTO *Standard Specifications for Highway Bridges.* These structures generally have spans in the range of 20 to 50 ft (6 to 15 m). They are advantageous where headroom is restricted and can often provide the required waterway area at a lower cost than building a short-span bridge. Long-span structures are made up of a structural-plate barrel of coated steel or aluminum and integral special features that enable the structure to reach long spans. Special features include either (1) continuous longitudinal stiffeners of metal and/or reinforced concrete attached to the plates at the sides of the top arc, or (2) circumferential reinforcing ribs curved from structural shapes and attached to the plates to provide additional stiffness. Typical sections of each are illustrated in Fig. 5.26. They may be constructed to most of the shapes shown in Fig. 5.25 except box culverts.

Box Culverts. This product type is available in either zinc-coated steel or aluminum.

Steel. Box culverts are available in three types, including (1) 6- × 2-in (152- × 51-mm) corrugated plate shell with 6- × 3-in (152- × 76-mm) corrugated rib stiffeners (inside, outside, or both), (2) 6- × 2-in (152- × 51-mm) corrugated plate shell with 3- × 5-in (76- × 127-mm) hot rolled angle rib stiffeners, and (3) 15- × 5.5-in (381- × 140-mm) corrugated plate shell without stiffeners. Sizes range as shown in Fig. 5.25. The structures usually have an open bottom and are supported on a base channel or corrugated footing pads, on either a concrete footing or compacted soil, depending on size and other factors. They are also available with full invert plates.

Aluminum. Box culverts have a 9- × 2½-in (230- × 64-mm) corrugated shell plate with extruded bulb angle rib stiffeners. Size ranges are similar to those for steel box culverts. Figure 5.27 shows a typical section and rib cross-sections. Stronger ribs, including a box-section rib, are available.

Tunnel Liners. Tunnel liners are press-formed from steel in an arc segment 16 or 18 in (400 or 450 mm) long. A corrugated profile is pressed in to make the wall cross-section, and flanges are formed on the sides. Two styles are available: (1) two-flange plates that are bolted through the flanges on the two longitudinal sides and lap-bolted

www.EngineeringEBooksPdf.com

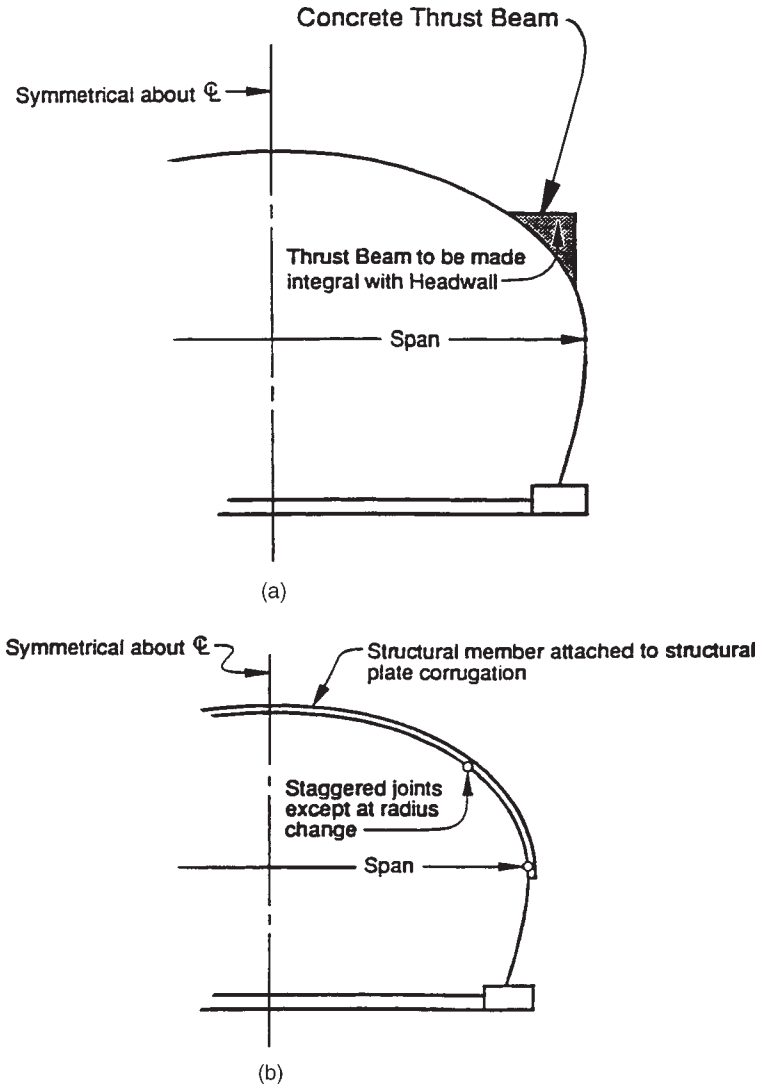

FIGURE 5.26 Typical sections of long-span structural-plate structures. (*a*) Longitudinally stiffened with concrete thrust beam. (*b*) Transversely stiffened with structural members. (*From* Highway Design Manual, *California Department of Transportation, with permission*)

on the other two sides, and (2) four-flange plates that are bolted together through flanges on all four sides. Installation and assembly can be done entirely from the inside as the tunnel is constructed. The assembled liner plates may then act as a temporary structure that is lined by concrete, or may act alone as a permanent conduit. In addition to tunneling, the liner plates can be used in rehabilitation work, such as for lining a deteriorated culvert.

www.EngineeringEBooksPdf.com

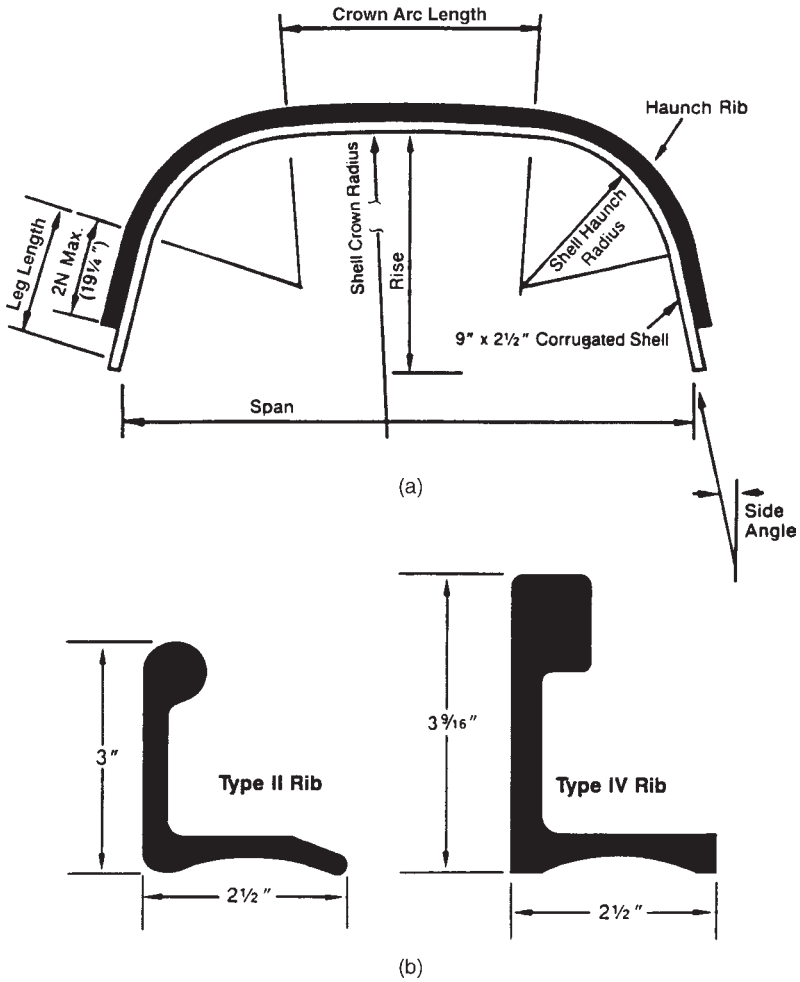

FIGURE 5.27 Corrugated aluminum box culvert. (*a*) Typical cross-section. (*b*) Details of stiffening ribs. Conversion: 1 in = 25.4 mm. (*From* Aluminum Box Culverts, *Contech Construction Products, with permission*)

5.6.3 Plastic Pipe

Both high-density polyethylene (HDPE) and polyvinyl chloride (PVC) are used for drainage pipe. HDPE pipe may be single-wall corrugated, smooth-wall (double-wall), or ribbed. Common diameters are 4 to 24 in (100 to 600 mm) for single wall, 4 to 60 in (100 to 1500 mm) for double wall, and 18 to 96 in (450 to 2400 mm) for ribbed pipe. Single-wall pipe has a deep corrugation, whereas a smooth internal liner is added for double-wall pipe. Wall profile details vary with the manufacturer. PVC pipe may be either smooth-wall or ribbed, with diameters ranging up to 54 in (1350 mm). Plastic pipe is furnished in lengths (typically about 20 ft (6 m) for HDPE and 13 ft (4 m) for PVC) and joined in the field by coupling bands. It is available only as round pipe.

www.EngineeringEBooksPdf.com

5.7 CULVERT SERVICE LIFE

The prediction of service life of drainage facilities is difficult because of the wide range of environments encountered and the various protective measures available. Service life and durability are directly related to resistance to corrosion, abrasion, and other modes of deterioration.

5.7.1 Design Service Life

Drainage facilities are usually designed for a specific service life. The design service life is sometimes defined as the expected period for which they are relatively free from maintenance. However, it can be defined to include a planned rehabilitation after a given number of years to reach the required service life as part of a value analysis approach. (See Art. 10.10.1.)

For a metal culvert, the design service life can be based on the number of years between the time it is installed and the time a perforation from either corrosion or abrasion occurs at any location in the culvert. However, this is a rather conservative approach because the consequences of small perforations are usually minimal and a single perforation can occur long before there is a general thinning of the metal. Thus, service life charts are often based on an average service life that extends life past first perforation by 25 percent or more. For a concrete culvert, the design service life is usually defined as the time between installation and when deterioration reaches the point of exposed reinforcement anywhere in the culvert.

The selection of design service life is dependent upon the use, importance, and ease of replacement of the culvert. A culvert located under a high fill or a roadway with high traffic volumes will be expensive to replace, and the replacement will disrupt traffic. Thus, such culverts are often assigned a design service life of 50 years or more. In contrast, a culvert parallel to the main road—for example, a pipe underneath an access road—will be relatively easy to replace and can be replaced with little disruption. Thus, such culverts, including those under low fill or on a minor roadway, are often assigned a shorter service life.

5.7.2 Environmental Factors

Important environmental factors that affect culvert durability include the acidity (pH) of the effluent and the soil, the electrical resistivity of the effluent and the soil, and the concentration of sulfates and chlorides. Data on these factors should be obtained at each pipe location, unless a random sampling plan is justified by establishing that the samples are uniform throughout a given length of the project. Water samples should be taken only during times of typical flows. If corrosive conditions are found to be present in the soil but not in the water samples, consideration should be given to using a better backfill material.

Concrete Pipe. Environmental factors that can affect the deterioration of concrete culverts include freeze-thaw, acids, sulfates, and chlorides. Freeze-thaw damage can occur if water penetrates the concrete interstices and then freezes and expands, causing cracking. Such damage would occur only at exposed ends of culverts, and low water-cement ratios or air entrainment can increase resistance. Continuous exposure to severe acidity is detrimental to concrete pipe; a pH below 5.0 is considered aggressive and below 4.0 highly aggressive. Improved resistance to acid attack can be attained by selecting aggregate that increases the total alkalinity of the concrete, increasing concrete

www.EngineeringEBooksPdf.com

cover over reinforcement, or adding barrier linings (e.g., epoxy coatings). Sulfates in the soil, groundwater, or effluent can be aggressive to concrete. Such problems, which are generally limited to arid regions with alkali soils, may be addressed with special cements and mix design. Chloride attack can potentially result from use of deicing salts and subsequent runoff.

Metal Pipe. Environmental factors that affect the corrosion of metal culverts include the acidity (pH) and the resistivity of the soil and water, and the moisture content, soluble salt content, oxygen content, and bacterial activity of the soil. These corrosion processes all involve the flow of current from one location to another. The current flows from an anodic area to a cathodic area through moist soil acting as an electrolyte, and this system is known as a corrosion cell. Thus, durability increases with increasing resistivity. Acid soils, those with low pH, tend to be more corrosive. Also, soils with high moisture content, such as loams and clays, tend to be more corrosive. High levels of chlorides and sulfates increase corrosion, as do increasing levels of dissolved oxygen and carbon dioxide. Numerous field studies have shown that the culvert invert is the portion most susceptible to corrosion, because it is generally exposed to water for a greater length of time. Thus, design charts are usually based on service life observed in the invert.

Plastic Pipe. PE and PVC pipe are not affected by acid conditions, or by sulfates or other alkalis. These materials can become embrittled from ultraviolet radiation as a result of prolonged exposure to direct sunlight, such as at culvert ends, but inhibitors are added to the composition of the material to substantially reduce this effect. If problems are encountered, ends can be shaded, covered with a coupling, or painted.

5.7.3 Abrasion

Abrasion causes a loss of section thickness due to impacts by the aggregate carried by stream flow. Protection from abrasion generally takes the form of providing a sacrificial thickness of the structural material, whether it be a thicker sheet of steel or concrete paved invert for metal pipe, or more concrete cover over the reinforcement for reinforced concrete pipe. Alternatives to providing for a thicker section include using debris control structures to prevent the abrasive material from reaching the culvert, and providing metal planking longitudinally along the invert as a separation between the bed load and the bottom of the culvert.

Abrasion can be considered in four levels of severity as categorized by streambed velocity and general aggregate size. Protective measures, particularly in the invert, should increase with increasing levels of abrasion as discussed subsequently. (See *Project Development and Design Manual,* Federal Lands Highway, FHWA.)

Level 1, termed *nonabrasive,* has very low flow velocities and no bed load.

Level 2, *low abrasive,* has flow velocities of 5 ft/s (1.5 m/s) or less and light bed load consisting of sand.

Level 3, *moderately abrasive,* has flow velocities of between 5 and 15 ft/s (1.5 and 4.5 m/s) and moderate bed loads consisting of sand and gravel.

Level 4, *severely abrasive,* has flow velocities exceeding 15 ft/s (4.5 m/s) and heavy bed loads consisting of sand, gravel, and rock.

The projected velocities should be based upon a typical flow and not upon the design flood for which the culvert has been designed. The bed load size may be determined

www.EngineeringEBooksPdf.com

by visual inspection of the surrounding environment and the upstream channel. Sampling of the aggregate for a gradation analysis is not necessary.

5.7.4 Guidelines for Culvert Selection

The following general guidelines from the Federal Lands Highway (FLH) manual should assist in determining appropriate culvert material types and necessary coatings. Other methods are available. Many state departments of transportation and local governmental agencies have published durability criteria, and this information should be used where available. A materials engineer should be consulted for important applications. Of course, the final selection must provide for structural requirements as discussed in Art. 5.8.

Concrete Pipe. Where the pH is less than 3.0 and the resistivity is less than 300 $\Omega \cdot$ cm, reinforced concrete pipe should not be specified. If the sulfate concentration exceeds 0.2 percent in the soil or water, type V cement should be specified. If the sulfate concentration exceeds 1.5 percent in the soil or water, an increased cement ratio using type V cement should be specified. The concrete cover over the reinforcement or the cement factor should be increased where there is severe abrasion.

Table 5.11 gives the minimum water side pH permitted for a concrete pipe culvert to obtain either a 50- or 75-year design service life. The table is based on research conducted by the Ohio Department of Transportation. Pipe size, barrel slope, and water side pH are statistically significant variables. It is interesting to note that the Ohio study found resistivity to not be a statistically significant variable.

Steel Pipe. Figure 5.28 shows a chart for determining the service life of a galvanized steel culvert under nonabrasive and low abrasive conditions. The average service life of

TABLE 5.11 Requirements for Concrete Pipe Protection

			Minimum pH to attain design service life*	
Pipe slope	Pipe rise, in	Pipe rise, mm	50 yr	75 yr
Less than 1%	<42	<1050	3.0	3.3
	42–72	1050–1800	3.8	4.1
	>72	>1800	4.2	4.5
1–3%	<42	<1050	3.2	3.5
	42–72	1050–1800	4.1	4.4
	>72	>1800	4.6	5.0
3–10%	<42	<1050	3.6	3.9
	42–72	1050–1800	4.5	4.9
	>72	>1800	5.0	5.4
Greater than 10%	<42	<1050	4.0	4.5
	42–72	1050–1800	5.0	5.5
	>72	>1800	5.5	6.0

*Based on Eq. (4) from Transportation Research Record 1008 Article "Field Performance of Concrete Pipe Culverts at Acidic Flow Sites in Ohio." For stream flow with a pH less than the minimums listed above, epoxy-coated concrete pipe is required.

Source: From *Location and Design Manual,* Vol. 2: *Drainage Design,* Ohio Department of Transportation, with permission.

www.EngineeringEBooksPdf.com

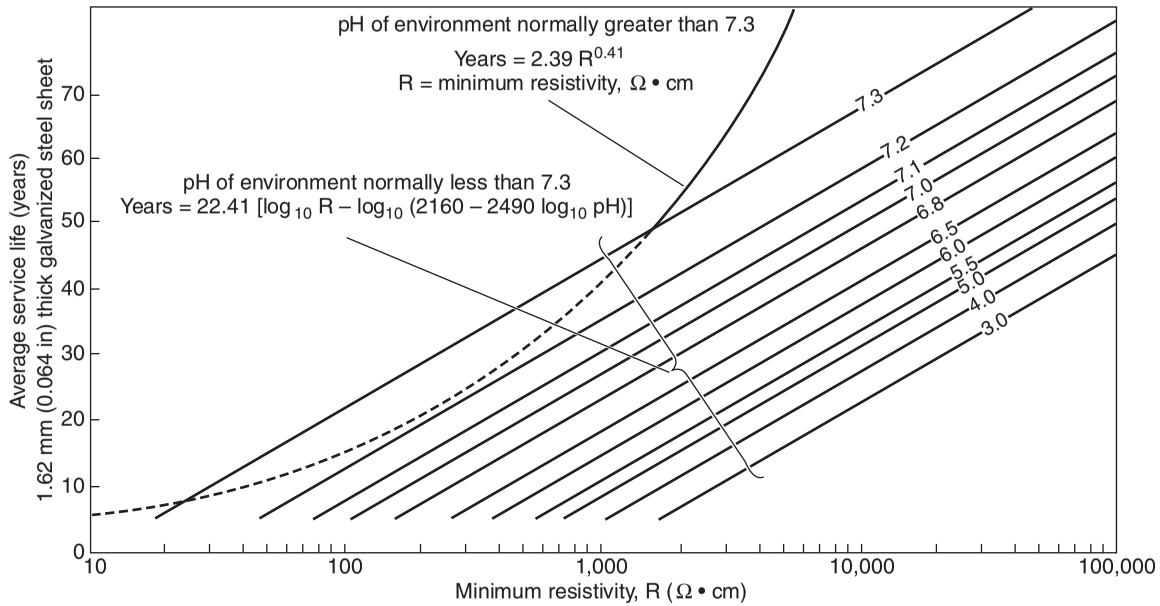

(a)

Specified thickness, in (mm)	0.052 (1.32)	0.064 (1.63)	0.079 (2.01)	0.109 (2.77)	0.138 (3.51)	0.168 (4.27)
Factor	0.8	1.0	1.2	1.7	2.2	2.6

(b)

FIGURE 5.28 Method for estimating service life of plain galvanized steel culverts. (*a*) Service life chart for 0.064-in (1.63 mm) thickness based on invert performance. (*b*) Conversion factors for other thicknesses. (*From* Project Development and Design Manual, *FHWA, with permission*)

www.EngineeringEBooksPdf.com

culvert with a wall thickness of 0.064 in (1.62 mm) is displayed in terms of pH and resistivity in Fig. 5.28*a*. For culverts with other wall thicknesses, obtain the service life from the chart and multiply by the factors in Fig. 5.28*b*. Use the chart for both the outside conditions and the inside (water side) conditions and base the design on the worst case. Generally, the inside condition controls.

For steel with a type 2 aluminum coating, the FLH manual assigns a greater service life under certain conditions. For nonabrasive and low abrasive flow, where the resistivity is equal to or greater than 1500 $\Omega \cdot$ cm and the pH is between 5 and 9, aluminized steel is considered to provide a service life twice that of galvanized steel as determined from Fig. 5.28.

Protective Coatings on Steel Pipe. Under nonabrasive and low abrasive conditions, the service life of galvanized steel culvert can be extended by application of protective coatings. For example, when the water side environment controls the pipe thickness, application of an asphaltic coating (a postfabrication coating by the pipe manufacturer) can add 10 years of service life to the culvert, and an application of an asphaltic paved invert in addition to the coating will add a total of 25 years. If the soil side controls, application of the asphaltic coating will add 25 years of life. Concrete lining will add 25 years of service life. Ethylene acrylic acid film coatings (a polymer precoat on the galvanized coil) with a 10-mil (0.25-mm) thickness can be expected to provide an additional 30 years of service life. Currently, there are insufficient data to predict the performance of ploymer precoated pipe under severely abrasive conditions. Concrete pavings can be designed to add service life.

Aluminum Pipe. Under nonabrasive and low abrasive conditions, where the resistivity is equal to or greater than 500 $\Omega \cdot$ cm and the pH is between 4 and 9, aluminum culverts can be assumed to have a service life of 50 years when the metal thickness is appropriately sized for structural adequacy.

Design for Abrasion. In moderate abrasive environments, the sheet thickness for both steel and aluminum pipes should be increased by one nominal thickness, or the invert should be protected. In severe abrasive conditions, the sheet thickness should be increased by one nominal thickness and the invert should be protected. Invert protection under severe abrasive conditions may consist of metal rails or energy-dissipating devices at the inlet. Under moderate abrasive conditions, invert protection may consist of (1) paving with portland cement concrete or (2) asphaltic coating and invert paving with bituminous concrete.

Plastic Pipe. Under most environmental and abrasive conditions, polyethylene and polyvinyl chloride plastic pipes may be specified without regard to the pH and resistivity of the site. Invert protection may be required under some abrasive conditions.

Example: Minimum Thickness of Galvanized Steel Culvert. The design service life for the culvert has been set at 50 years. A site investigation of a potential location shows that the soil has a pH of 7.2 and a resistivity of 5000 $\Omega \cdot$ cm. The water flow shows a pH of 6.8 and a resistivity of 4000 $\Omega \cdot$ cm. Determine the minimum sheet thickness for durability.

Outside condition. In Fig. 5.28*a,* find the intersection of the vertical line for 5000 $\Omega \cdot$ cm with the inclined line for 7.2 pH, and read the average service life of 52 years from the vertical scale at the left.

Inside condition. In like manner, for a resistivity of 4000 $\Omega \cdot$ cm and a pH of 6.8, find the average service life of 42 years.

www.EngineeringEBooksPdf.com

In this example, the inside conditions control the design, and the thickness must be increased. For the 0.064-in (1.63-mm) sheet thickness, the ratio of the design service life to the anticipated service life is 50/42 = 1.2. From Fig. 5.28*b,* the multiplying factor is 1.2 for a thickness of 0.079 in (2.01 mm). Therefore, a thickness of 0.079 in (2.01 mm) should provide the desired service life of 50 years.

An alternative is the application of an asphaltic coating, which can add 10 years of service life when the inside condition controls. For the 0.064-in (1.63-mm) sheet thickness, 42 + 10 = 52 years. Therefore, consider an 0.064-in (1.63-mm) sheet thickness with an asphaltic coating.

5.8 STRUCTURAL DESIGN OF DRAINAGE PIPES

5.8.1 General Considerations

The structural capacity of an underground structure and the methods of determining that capacity are dependent upon the material properties of the structure and its physical configuration. In this context, the structure is the composite structure comprised of the pipe and the surrounding soil. The surrounding soil is generally referred to as the *soil envelope,* and buried structures rely upon the soil envelope for their ability to withstand loads.

Under load, the pipe will deflect laterally and mobilize the passive resistance of the surrounding soil. Also, the pipe and surrounding soil will settle and the pipe will deflect to varying degrees. The relative movement of the pipe and soil results in the stiffer component attracting load and the less stiff component shedding load. This phenomenon is called *soil-arching* and is a fundamental consideration in the pipe-soil system. A study of the soil-structure interaction is necessary for an adequate solution to the buried structure problem.

Pipes are generally classified as either rigid or flexible, depending on their bending stiffness. For a round pipe under load without the benefit of the soil envelope, deflection due to bending is proportional to D^3/EI, where D is the diameter, E is the modulus of elasticity, and I is the moment of inertia of the wall cross-section. EI is the wall-bending stiffness. Concrete and clay pipe usually have a relatively thick wall and a high bending stiffness, and are referred to as *rigid pipe.* Corrugated metal pipe and plastic pipe have much thinner walls and lower bending stiffness, and are referred to as *flexible pipe.* Any discussion of the structural capacity of the pipe must also discuss whether the pipe is flexible or rigid (these are the only two options), since the design methods for each vary significantly.

Rigid pipe, unless designed by the empirical D-load method, is designed for moment, thrust, and shear. Corrugated metal pipes can generally be designed for thrust alone. Plastic pipes are designed for thrust, deflection, and bending stress and strain.

The combination of dead and live loads causes variable pressures on the installed pipe. As illustrated in Fig. 5.29, the dead load pressure increases with an increase in cover height, whereas the live load decreases with an increase in cover height. For highway loads, this results in a minimum load on the structure when there is approximately 4 to 5 ft (1.22 to 1.52 m) of cover. Standard designs for underground structures may be found in industry publications with minimum and maximum cover heights indicated. However, when a structure is designed for a site-specific cover height, the designer should be aware that future changes in roadway elevation may cause increased loading conditions.

Figure 5.30 shows the nomenclature generally used for culvert design and installation. The supporting soil beneath the culvert is the foundation, and the bedding is that

www.EngineeringEBooksPdf.com

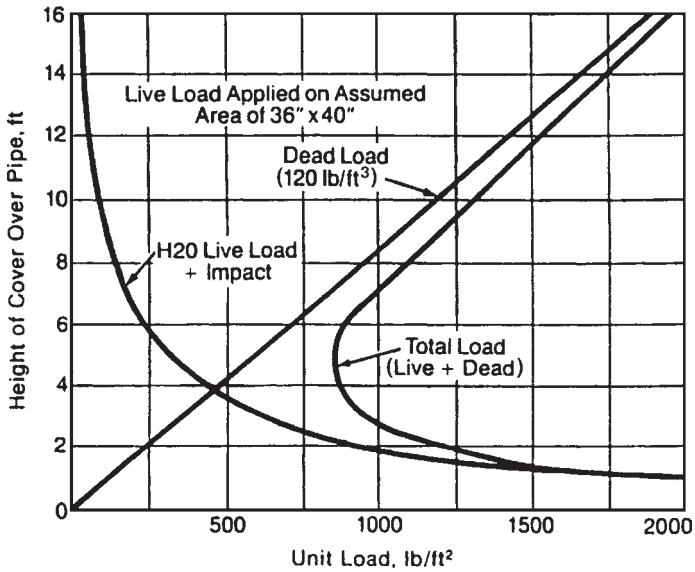

FIGURE 5.29 Design pressures for metal culverts under earth dead load and H 20 highway live load. Conversions: 1 ft = 0.305 m, 1 lb/ft^2 = 0.0479 kPa. (*From* Handbook of Steel Drainage and Highway Construction Products, *American Iron and Steel Institute, 1994, with permission*)

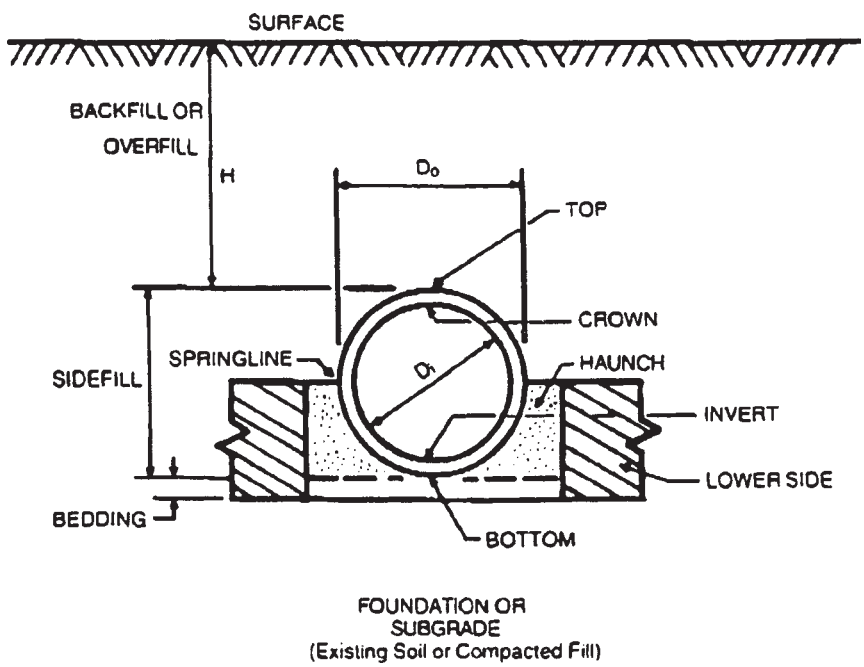

FIGURE 5.30 Pipe installation terminology. (*From Design Data 40, American Concrete Pipe Association, 1992, with permission*)

www.EngineeringEBooksPdf.com

portion of the foundation in contact with the bottom of the pipe. The springline of the pipe is located at the location of maximum span. For a circular or elliptical pipe, this occurs at midheight. The haunch is the zone between the springline and the invert. The soil placed and compacted around the culvert is known as the *backfill,* or sometimes as the *sidefill.* The bedding and backfill are collectively referred to as the *embedment.*

In 1997 AASHTO published the first edition of the *LRFD Bridge Design Specifications,* and in 2007 the fourth edition. The goal of AASHTO is to use only the LRFD design code for new construction. However, the more traditional methods are currently more widely used for pipe design.

5.8.2 Loads

Introduction. Loads acting on buried structures include the dead load of the structure itself, the dead load of the earth cover over the structure, the weight of the fluid within the structure, live loads from vehicles, and, under certain circumstances, external hydrostatic pressure from groundwater.

The structure dead load is only significant for rigid structures. Flexible structures are manufactured from plastic or metal. In each case, the weight of the material is insignificant when compared with the total load on the structure. For rigid structures, however, because the material is generally concrete and because the pipe wall thickness is considerable, the weight of the material should be included in the determination of the total load applied on the structure. For concrete pipe, the pipe weight, W_p, can be estimated using the following equations:

Circular:

$$W_p = 3.3h\,(D_i + h) \text{ in U.S. Customary units}$$
$$W_p = 74 \times 10^{-6} h\,(D_i + h) \text{ for SI units} \tag{5.23a}$$

Arch or horizontal elliptical:

$$W_p = 2.8h\,(S_i + h) \text{ in U.S. Customary units}$$
$$W_p = 63 \times 10^{-6} h\,(S_i + h) \text{ for SI units} \tag{5.23b}$$

Vertical elliptical:

$$W_p = 4.2h\,(S_i + h) \text{ in U.S. Customary units}$$
$$W_p = 94 \times 10^{-6} h\,(S_i + h) \text{ for SI units} \tag{5.23c}$$

where W_p = pipe weight, lb/ft (kN/m)
D_i = inside pipe diameter, in (mm)
S_i = inside horizontal span, in (mm)
h = pipe wall thickness, in (mm)

(See *Concrete Pipe Technology Handbook,* American Concrete Pipe Association, 1994.)

Earth Load. The first detailed studies of the loads on buried pipes were conducted by Anson Marston at the Iowa State University in the early 1990s. These studies resulted in the Marston load theory for rigid pipes. The theory provides a methodology for determining the loads on buried pipes in almost any installation condition.

www.EngineeringEBooksPdf.com

Marston theorized that a pipe in a trench was in static equilibrium. Therefore, the summation of vertical forces was zero. He also concluded that the pipe and backfill would settle relative to the in situ trench walls. He then went about determining the different forces acting on the pipe. Represented pictorially in Fig. 5.31, these are the weight of the soil in the trench, the resisting vertical force at the bottom of the trench, and the shear forces present at the interface of the backfill and the native trench wall.

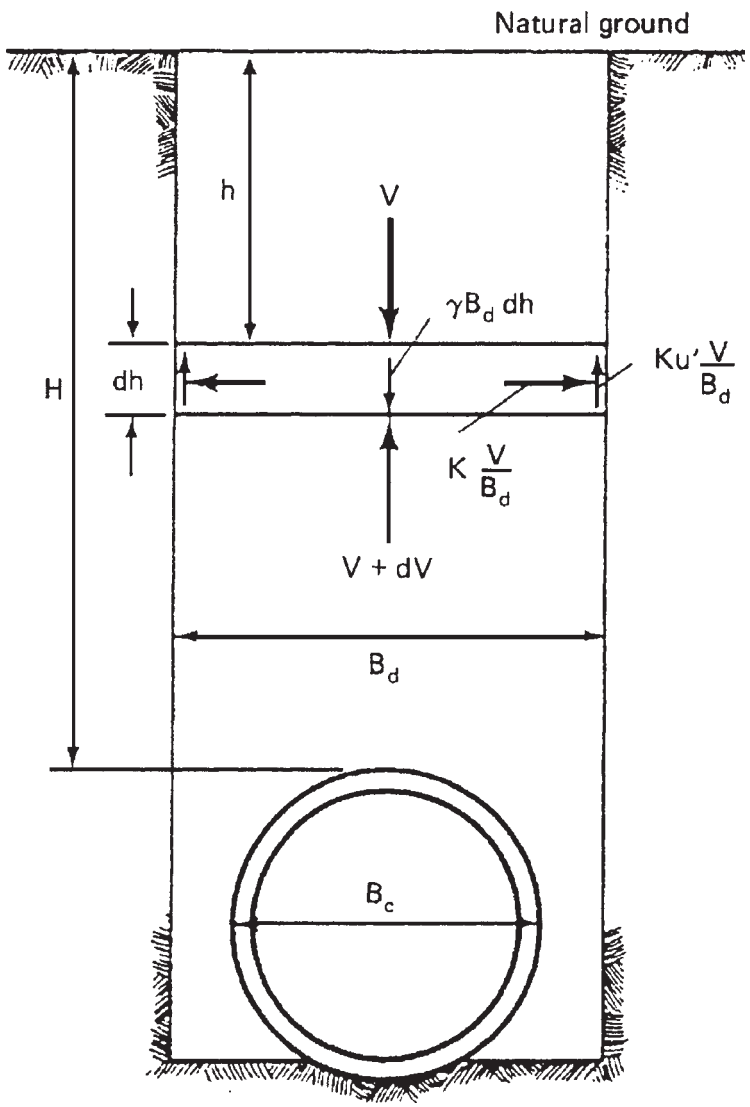

FIGURE 5.31 Forces acting on a buried pipe as presented by Marston. (*From* Soil Engineering, *4th ed., HarperCollins, 1982, with permission*)

www.EngineeringEBooksPdf.com

Through a mathematical transformation of the equilibrium equation, Marston arrived at the following equation for a rigid pipe in a trench:

$$W_E = C_d \gamma B_d^2 \tag{5.24}$$

with

$$C_d = \frac{1 - e^{-2K\mu'(H/B_d)}}{2K\mu'} \tag{5.25}$$

where W_E = earth load, lb/ft (kN/m)
γ = soil unit weight, lb/ft^3 (kN/m^3)
H = height of cover, ft (m)
$K\mu'$ = frictional coefficient
B_d = trench width, ft (m)

Marston also investigated the loads on rigid pipes in embankment conditions. However, since there are no trench walls, it was necessary to determine the relative movement of the pipe and soil directly above the pipe to the fill material adjacent to the pipe. The soil directly above the pipe is called the *soil prism* (see Fig. 5.32). This gave a measurement of the shear forces at the interface of the embankment and soil prism. Marston then used similar procedures for determining the loads on pipes in embankments as he used for pipes in trenches. He set the system in static equilibrium and summed vertical forces. Using this procedure, he derived formulas for several embankment installation conditions.

Marston's student, M. G. Spangler, expanded the previous work of Marston in determining a method for relating the strength of an installed rigid pipe to the strength

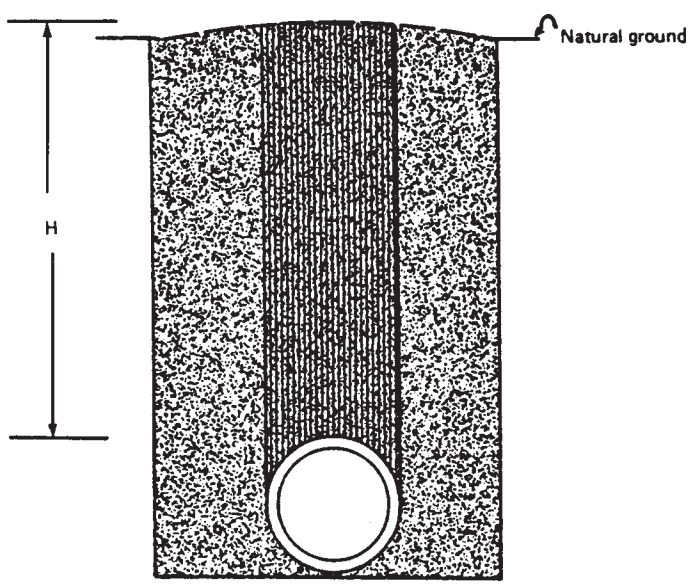

FIGURE 5.32 Illustration of prism load acting on pipe. (*From A. P. Moser,* Buried Pipe Design, *McGraw-Hill, 2001, with permission*)

www.EngineeringEBooksPdf.com

of a pipe in a three-edge bearing test. Marston originally introduced the concept of a bedding factor for this purpose. Spangler refined the method by introducing the 0.01-in (2.5-mm) crack as a laboratory performance limit for equating the in-field performance to the three-edge bearing test performance. Later, as use of corrugated metal pipe increased, Spangler noticed that the Marston load theory did not provide satisfactory results for flexible pipes. The load that a flexible pipe was able to support was much greater than what was predicted using Marston load theory and bedding factors. Spangler completed a series of field and laboratory tests to investigate the loads on flexible pipes. His analyses resulted in the now famous Iowa formula, which was subsequently revised by R. K. Watkins.

More recently engineers have attempted, through the use of computers and finite element analysis, to better represent soil-structure interaction and the resultant loads on buried pipes. They have met with varying degrees of success. The works of both Marston and Spangler are still widely used in engineering practice. The calculation of pipe deflection by the Iowa formula is given in Art. 5.8.6. For a complete discussion of the Marston load theory and Spangler's Iowa formula, see A. P. Moser's *Buried Pipe Design,* 2d ed., McGraw-Hill, 2001.

Representations of earth loads are gradually moving away from the use of the Marston loads. In lieu of the Marston loads, the earth load is represented as a proportion of the soil prism load. The soil prism load is the weight of the column of soil directly above the pipe:

$$W_c = \gamma\left[H + \frac{D_o\,(4 - \pi)}{8}\right]D_o \tag{5.26}$$

where W_c = prism load, lb/ft (kN/m)
γ = soil unit weight, lb/ft^3 (kN/m^3)
H = height of cover, ft (m)
D_o = outside pipe diameter, ft (m)

This is depicted graphically in Fig. 5.32. Depending upon the pipe type (stiffness) and the relative quality of the soil envelope, the effective earth load on the pipe may be greater than, equal to, or less than the soil prism load. This modification of the soil prism load is made via an *arching factor.* Therefore, the total vertical earth load acting on the structure, W_E, is

$$W_E = \text{VAF}\,(W_c) \tag{5.27}$$

where W_c = prism load
VAF = vertical arching factor

Live Load and Impact. Culverts are usually designed for the live load generated by an AASHTO HS 20 truck. The controlling loading for culverts consists of two axles spaced 14 ft (4.3 m) apart, each weighing 32 kip (145 kN), with wheels on the axle spaced 6 ft (1.8 m) apart transversely. The 16-kip (73-kN) wheel load is the same as for an H 20 loading. The live load applied to underground structures under load factor criteria is either a standard HS truck, or a live load lane.

Where the culvert has a span of 20 ft (6.1 m) or greater, it is classified as a bridge and must be investigated for an *alternate military loading* of two axles 4 ft (1200 mm) apart with each axle weighing 24 kip (107 kN). The live load lane consists of a uniform load applied in conjunction with a concentrated load. The concentrated load is distributed across the design lane of 10 ft (3000 mm), and is the uniform load. Because of this and because of the relatively short spans associated with culverts, the standard HS truck usually controls as the critical loading.

www.EngineeringEBooksPdf.com

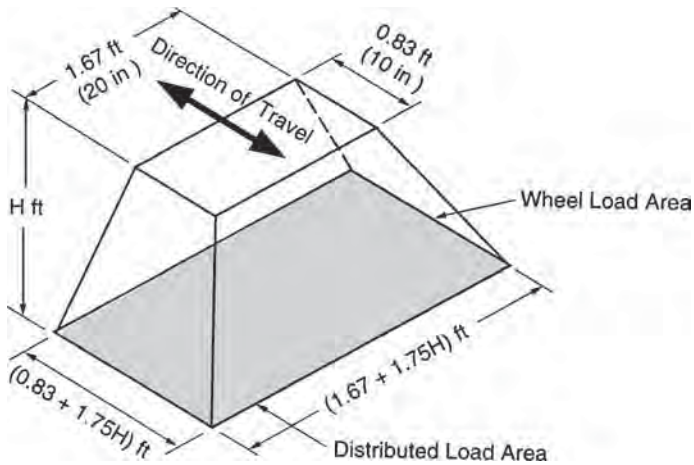

FIGURE 5.33 Distributed load area for single dual wheel. Conversions: 1 in = 25.4 mm, 1 ft = 0.305 m. (*From* Concrete Pipe Design Manual, *American Concrete Pipe Association, 2007, with permission.*)

Where the fill over a culvert is 2 ft (600 mm) or more, the wheel live load of 16 kip (73 kN) is applied as a concentrated load acting on the wheel print area and uniformly distributed over a rectangle with sides increasing at a rate of $1^3/_4$ times the depth of cover. This is represented pictorially in Fig. 5.33. If areas from several concentrated loads overlap, the total load is uniformly distributed over an area as defined by the outside limits of the individual areas.

Rigid structures with less than 2 ft (600 mm) of cover use a different method for distributing the live load. AASHTO code requires that in this case the live load be distributed using the same method as is used in distributing live load in a concrete slab. This method is generally only applied to reinforced concrete box culverts or three-sided culverts.

An impact factor is added to the highway live loading. The factor is equal to 30 percent of the live load for a soil cover of 1 ft (300 mm) or less and decreases to 20 percent for a cover up to 2 ft (600 mm) and to 10 percent for a cover up to 2 ft 11 in (875 mm). There is no impact applied when the cover is equal to or greater than 3 ft (900 mm).

5.8.3 Rigid Pipe

Introduction. There are two general types of rigid underground structures—those with a curvilinear shape, and those made up of straight walls and flat slabs. A reinforced concrete pipe is an example of the former, while a reinforced concrete box is an example of the latter. Rigid structures built in a curvilinear shape tend to act in compression. However, because of their limited deflection capability, they develop moment as well as compressive stresses. The effect of moment is reduced, however, because the curvilinear shape increases the compression in the member. Structures built with straight structural elements act very differently. The effect of moment on the individual members is so great that it is not unusual for the engineer to completely ignore any small benefit obtained from the compression of the member.

Circular rigid pipe may be designed by either the empirical *D*-load method, termed *indirect design,* or by an analytical method of *direct design.* If the pipe is designed by

www.EngineeringEBooksPdf.com

the indirect method, moments, thrust, and shears need not be determined. All that is necessary for the design is the total load on the pipe, the bedding factor as determined from the proposed bedding conditions, and the proposed inside and outside pipe diameters. If the pipe is designed by the direct method, the moments, thrust, and shears may be determined from charts prepared by the American Concrete Pipe Association (ACPA) and published in 1994 in its *Concrete Pipe Technology Handbook.* Otherwise they may be determined from more exact finite element methods using available computer programs. After the moments, thrust, and shears are determined, the required pipe wall thickness, concrete strength, and area of reinforcing steel may be determined.

American Society of Civil Engineers provides a specification titled *Standard Practice for Direct Design of Buried Concrete Pipe Using Standard Installations (SIDD).* This document presents a direct design method for reinforced concrete pipe based on extensive research using the finite element computer program Soil-Pipe Interaction Design and Analysis (SPIDA). The results of the studies are twofold. First, four standard installation types were developed, and second, a generalized pressure distribution was developed. These changes represent a major departure from the traditional Marston/Spangler installations and design method.

The four installation types can be applied to both a trench and an embankment installation. Unlike Marston/Spangler design theory, the SIDD method does not differentiate between these two installation types. The nomenclature used in SIDD is given in Figs. 5.34 and 5.35, standard installations for trenches and embankments, respectively.

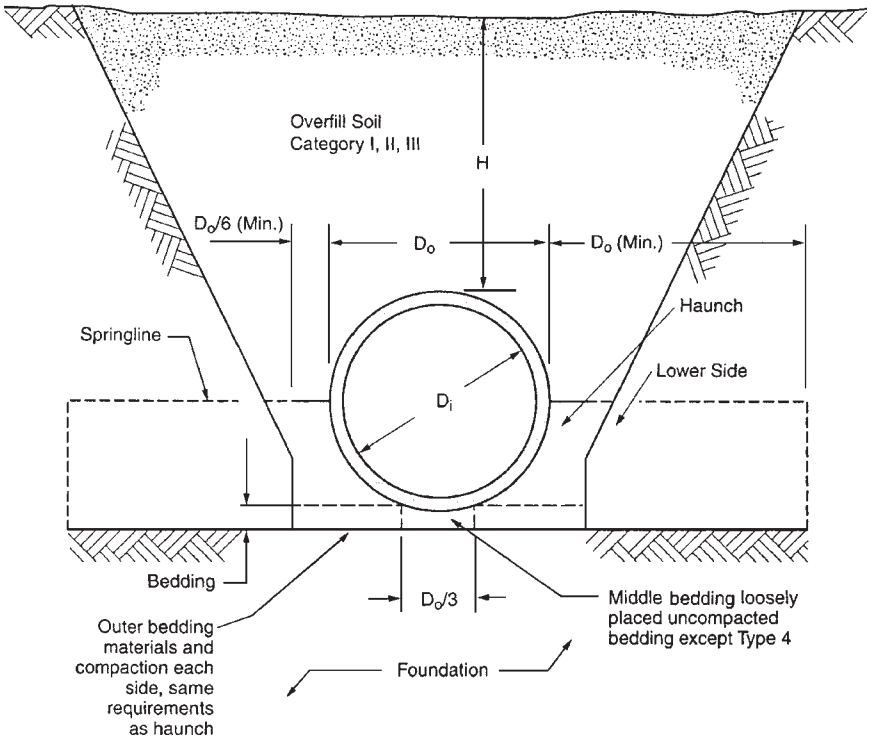

FIGURE 5.34 Standard trench installation. (*From* Concrete Pipe Design Manual, *American Concrete Pipe Association, 2007, with permission*)

www.EngineeringEBooksPdf.com

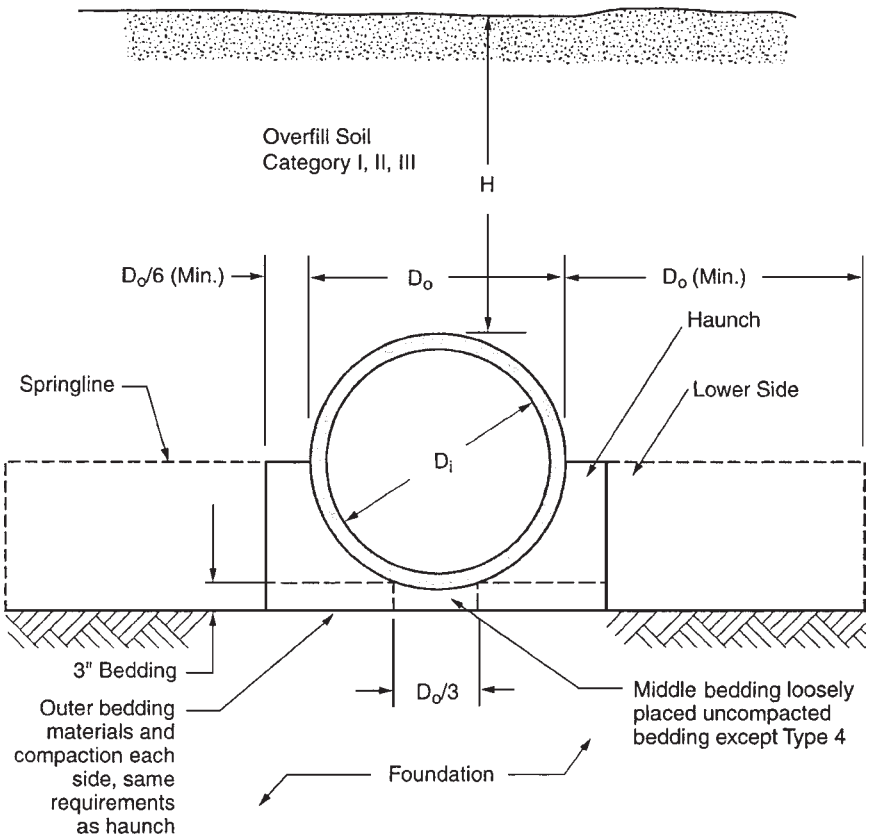

FIGURE 5.35 Standard embankment installation. (*From* Concrete Pipe Design Manual, *American Concrete Pipe Association, 2007, with permission*)

Note that the bedding detail requires the bedding under the middle one-third of the pipe diameter to be left uncompacted. This is so that the pipe can properly seat itself in the bedding, resulting in a greater length of support along the bottom circumference of the pipe.

SIDD is only intended for use on circular pipe. The ACPA recommends that arch and elliptical pipe be designed using traditional Marston/Spangler design methods.

Live Loads. As discussed in Art. 5.8.2, live loads are distributed through the cover above the top of the pipe. The ACPA computed live load distribution factors for critical loading cases using standard AASHTO methodologies as given in the *Concrete Pipe Design Manual,* American Concrete Pipe Association, 2007. The results are summarized as follows: The pressure at the crown of the pipe is

$$\sigma_L = \frac{P\,(1 + I_f)}{A_{\mathrm{LL}}} \tag{5.28}$$

www.EngineeringEBooksPdf.com

where σ_L = pressure intensity, lb/ft^2 (kPa)
P = wheel load, lb (kN)
I_f = impact factor
A_{LL} = distributed live load area, ft^2 (m^2)

The total live load is

$$W_L = W_d L S_L \tag{5.29}$$

where W_L = total live load, lb (kN)
W_d = live load on pipe, lb/ft^2 (kN/m^2)
S_L = outside pipe diameter or width of A_{LL} transverse to longitudinal axis of pipe, whichever is less, ft (m)
L = length of A_{LL} parallel to longitudinal axis of pipe, ft (m)

and

$$W_d = \frac{W_L}{L_e} \tag{5.30}$$

where

$$L_e = L + 1.75\left(\frac{3D_o}{4}\right) \tag{5.31}$$

Please see the referenced ACPA manual for full details and for charts summarizing maximum live loads on reinforced concrete pipes.

For rigid structures where the cover is less than 2 ft (600 mm), the wheel load is applied as a concentrated load and there is no assumed distribution due to the fill. Since most concrete pipes have 2 ft (600 mm) or more of cover, this generally applies only to reinforced concrete box culverts or three-sided culverts. The distribution length longitudinally along the top slab of the structure for the wheel loads applied as concentrated loads is defined as the distance E, ft (mm), given by

$$E = 4 + 0.06S \text{ in U.S. Customary units} \tag{5.32a}$$

$$E = 1220 + 0.06S \text{ in SI units} \tag{5.32b}$$

where S is the span in ft (mm). The live load may be distributed to the bottom slab of a reinforced concrete box culvert over a longitudinal distance equal to the width of the top slab strip increased by twice the box height.

Load Distribution for Rigid Pipe. The pipe-soil system will distribute the applied earth load about the circumference of the pipe. The distribution is far from uniform. The SIDD specification includes an *earth pressure distribution,* sometimes called the *Heger pressure distribution,* for the distribution of loads about a concrete pipe. Figure 5.36 shows the pressure distribution as a function of several nondimensional arching factors and pressure distribution ratios. The figure also provides tabular data for the arching factors and pressure distribution ratios for each of the four standard installations. These factors are then multiplied by the soil prism load to obtain the magnitude of the pressures about the pipe. A full discussion on the development of the earth pressure distribution can be found in *Concrete Pipe Technology Handbook,* American Concrete Pipe Association, 1994.

The use of the SIDD earth pressure distribution requires that the soil types and compaction levels meet exact specifications. The soil material and compactions requirements and bedding thickness requirements for the four SIDD installations are given in Table 5.12. SIDD soil type designations are given in Table 5.13.

www.EngineeringEBooksPdf.com

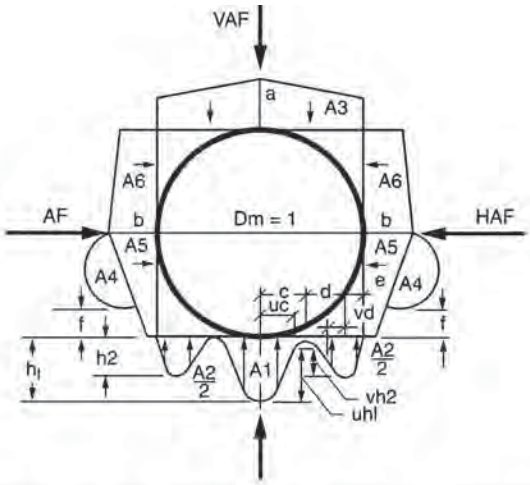

Installation Type	VAF	HAF	A1	A2	A3	A4	A5	A6	a	b	c	e	f	u	v
1	1.35	0.45	0.62	0.73	1.35	0.19	0.08	0.18	1.40	0.40	0.18	0.08	0.05	0.80	0.80
2	1.40	0.40	0.85	0.55	1.40	0.15	0.08	0.17	1.45	0.40	0.19	0.10	0.05	0.82	0.70
3	1.40	0.37	1.05	0.35	1.40	0.10	0.10	0.17	1.45	0.36	0.20	0.12	0.05	0.85	0.60
4	1.45	0.30	1.45	0.00	1.45	0.00	0.11	0.19	1.45	0.30	0.25	0.00	-	0.90	-

Notes:

1. *VAF and HAF are vertical and horizontal arching factors. These coefficients represent non-dimensional total vertical and horizontal loads on the pipe, respectively. The actual total vertical and horizontal loads are (VAF) X (PL) and (HAF) X (PL), respectively, where PL is the prism load.*
2. *PL, the prism load, is the weight of the column of earth cover over the pipe outside diameter and is calculated as:*

$$PL = w\left[\left(H + \frac{D_0\,(4 - \pi)}{96}\right)\right]\frac{D_0}{12}$$

3. *Coefficients A1 through A6 represent the integration of non-dimensional vertical and horizontal components of soil pressure under the indicated portions of the component pressure diagrams (i.e. the area under the component pressure diagrams). The pressures are assumed to vary either parabolically or linearly, as shown, with the non-dimensional magnitudes at governing points represented by h1, h2, uh1, vh2, a and b. Non-dimensional horizontal and vertical dimensions of component pressure regions are defined by c, d, e, vc, vd, and f coefficients.*

4. *d is calculated as (0.5 – c – e).*
   h1 is calculated as (1.5A1) / (c) (1+u).
   h2 is calculated as (1.5A2) / [(d) (1+v) + (2e)]

FIGURE 5.36 Arching coefficients and Heger earth pressure distributions. (*From* Concrete Pipe Design Manual, *American Concrete Pipe Association, 2007, with permission*)

www.EngineeringEBooksPdf.com

TABLE 5.12 Standard Soils and Minimum Compaction Requirements for Concrete Pipe

Installation type	Bedding thickness	Haunch and outer bedding*	Lower side*
Type 1	D_o/24 minimum, not less than 75 mm (3 in). If rock foundation, use D_o/12 minimum, not less than 150 mm (6 in).	95% Category I.	90% Category I, 95% Category II, or 100% Category III.
Type 2	D_o/24 minimum, not less than 75 mm (3 in). If rock foundation, use D_o/12 minimum, not less than 150 mm (6 in).	90% Category I or 95% Category II.	85% Category I, 90% Category II, or 95% Category III.
Type 3	D_o/24 minimum, not less than 75 mm (3 in). If rock foundation, use D_o/12 minimum, not less than 150 mm (6 in).	85% Category I, 90% Category II, or 95% Category III.	85% Category I, 90% Category II, or 95% Category III.
Type 4	No bedding required, except if rock foundation, use D_o/12 minimum, not less than 150 mm (6 in).	No compaction required, except if Category III, use 85% Category III.	No compaction required, except if Category III, use 85% Category III.

*Compaction and soil symbols like "95% Category I" refer to "Category I soil material with minimum standard Proctor compaction of 95%."

Source: From *Concrete Pipe Design Manual,* American Concrete Pipe Association, 2007, with permission.

TABLE 5.13 Equivalent USCS and AASHTO Soil Classifications for SIDD Soil Designations

	Representative soil types		Percent compaction	
SIDD soil	USCS	Standard AASHTO	Standard Proctor	Modified Proctor
Gravelly sand (Category 1)	SW, SP, GW, GP	A1, A3	100	95
			95	90
			90	85
			85	80
			80	75
			61	59
Sandy silt (Category II)	GM, SM, ML; also GC, SC with less than 20% passing no. 200 sieve	A2, A4	100	95
			95	90
			90	85
			85	80
			80	75
			49	46
Silty clay (Category III)	CL, MH, GC, SC	A5, A6	100	90
			95	85
			90	80
			85	75
			80	70
			45	40

Source: From *Concrete Pipe Design Manual,* American Concrete Pipe Association, 2007, with permission.

www.EngineeringEBooksPdf.com

Example: Earth Load on Concrete Pipe. A 60-in-diameter (1524-mm) concrete pipe with 6-in (152-mm) walls is to be installed under 12 ft (3.66 m) of cover using a SIDD Type 2 installation. The backfill is sandy silt compacted to a density of 120 lb/ft^3 (19 kN/m^3). Determine the vertical load acting at the crown and invert of the pipe and the horizontal load acting at the springline.

Calculate the soil prism load using Eq. (5.26) as

$$W_c = \gamma \left[H + \frac{D_o (4 - \pi)}{8} \right] D_o$$

$$= 120 \left[12 + \frac{6 (4 - \pi)}{8} \right] 6$$

$$= 9104 \text{ lb/ft } (133 \text{ kN/m})$$

From Fig. 5.36, for a Type 2 installation the crown VAF coefficient is 1.40 and the springline horizontal arching factor (HAF) coefficient is 0.40. Use Eq. (5.27) to determine the vertical design load:

$$W_{EV} = \text{VAF } (W_c)$$
$$= 1.40 \ (9104)$$
$$= 12{,}746 \text{ lb/ft } (186 \text{ kN/m})$$

Also use Eq. (5.27) to determine the horizontal design load:

$$W_{EH} = \text{HAF } (W_c)$$
$$= 0.40 \ (9104)$$
$$= 3642 \text{ lb/ft } (53 \text{ kN/m})$$

Structural Design of Concrete Pipe by Indirect Design. The indirect design method is an empirical method in which the pipe is tested by the three-edge bearing test (Fig. 5.37), and is subjected to a previously calculated load. If the pipe supports the application of the load without exceeding a crack width criterion of 0.01 in (2.5 mm), it is considered acceptable for the application for which it was manufactured. Even though AASHTO, ASCE, and ACPA promote the use of the SIDD direct design method for concrete pipe, the traditional indirect design method is still in widespread use.

The concept of the bedding factor is used in the indirect design method to relate the load-carrying capacity of an installed pipe to that of a pipe in a three-edge bearing test. In other words, the bedding factor is the ratio of the field applied load to the three-edge bearing load. For any given load, with a better installation, a lower-strength pipe is needed than would be required with an installation of poorer quality. The bedding factor is a function of the following:

1. The quality of the bedding material
2. The intimacy of contact between the bedding and the pipe
3. The length over which the bedding supports the pipe
4. The quality of side fill material
5. The length over which the side fill responds to pipe deflection with passive earth pressure

www.EngineeringEBooksPdf.com

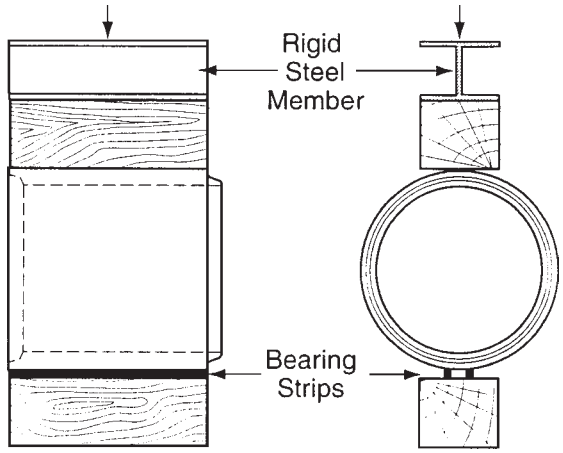

FIGURE 5.37 Setup for three-edge bearing test. (*From* Concrete Pipe Design Manual, *American Concrete Pipe Association, 2007, with permission*)

The ACPA conducted parametric studies of the four standard SIDD installations to determine appropriate bedding factors for use in the indirect design method. These values are presented in Table 5.14. More exact bedding factors for trench installations are published in *Concrete Pipe Design Manual*, American Concrete Pipe Association, 2007. When live loads control the design of a concrete pipe (less than 7 ft or 2.1 m of cover), a "bedding factor" for the live load must also be considered. These live load bedding factors are given in Table 5.15. Where the pipe is jacked, it maintains good contact in the area of the invert. In addition, it is common practice to grout outside the pipe after jacking operations are complete. Because of this, a bedding factor as high as 3 may be used for jacked pipe.

The load on the pipe is determined as discussed above and in Art. 5.8.2. The earth load is determined by adjusting the prism load by the arching factor. The earth load is combined with the structure dead load and any hydrostatic loads to obtain the total dead load. The dead load is then combined with the live load and impact load to obtain

TABLE 5.14 Bedding Factors for Dead Load under Embankment Conditions, B_{fD}

Pipe diameter, in	Standard installation			
	Type 1	Type 2	Type 3	Type 4
12	4.4	3.2	2.5	1.7
24	4.2	3.0	2.4	1.7
36	4.0	2.9	2.3	1.7
72	3.8	2.8	2.2	1.7
144	3.6	2.8	2.2	1.7

Notes: (1) For pipe diameters other than those listed, embankment condition factors can be obtained by interpolation. (2) Bedding factors are based on the soils being placed with the minimum compaction specified.

Source: From *Concrete Pipe Design Manual,* American Concrete Pipe Association, 2007, with permission.

www.EngineeringEBooksPdf.com

TABLE 5.15 Bedding Factors, B_{fL}, for HS 20 Live Loadings

Fill height, ft	Pipe diameter, in										
	12	24	36	48	60	72	84	96	108	120	144
0.5	2.2	1.7	1.4	1.3	1.3	1.1	1.1	1.1	1.1	1.1	1.1
1.0	2.2	2.2	1.7	1.5	1.4	1.3	1.3	1.3	1.1	1.1	1.1
1.5	2.2	2.2	2.1	1.8	1.5	1.4	1.4	1.3	1.3	1.3	1.1
2.0	2.2	2.2	2.2	2.0	1.8	1.5	1.5	1.4	1.4	1.3	1.3
2.5	2.2	2.2	2.2	2.2	2.0	1.8	1.7	1.5	1.4	1.4	1.3
3.0	2.2	2.2	2.2	2.2	2.2	2.2	1.8	1.7	1.5	1.5	1.4
3.5	2.2	2.2	2.2	2.2	2.2	2.2	1.9	1.8	1.7	1.5	1.4
4.0	2.2	2.2	2.2	2.2	2.2	2.2	2.1	1.9	1.8	1.7	1.5
4.5	2.2	2.2	2.2	2.2	2.2	2.2	2.2	2.0	1.9	1.8	1.7
5.0	2.2	2.2	2.2	2.2	2.2	2.2	2.2	2.2	2.0	1.9	1.8
5.5	2.2	2.2	2.2	2.2	2.2	2.2	2.2	2.2	2.2	2.0	1.9
6.0	2.2	2.2	2.2	2.2	2.2	2.2	2.2	2.2	2.2	2.1	2.0
6.5	2.2	2.2	2.2	2.2	2.2	2.2	2.2	2.2	2.2	2.2	2.2

Source: From *Concrete Pipe Design Manual,* American Concrete Pipe Association, 2007, with permission.

the total load. The appropriate load to be applied to the pipe for the three-edge bearing test may be found by dividing the total load by the appropriate bedding factor as determined from the installation conditions. This final value is termed the *required minimum three-edge bearing load (TEB).* If the pipe is nonreinforced, a safety factor of between 1.25 and 1.5 should be applied to the load. This is because as soon as the nonreinforced pipe cracks, it has reached its ultimate strength. However, a reinforced concrete pipe has significant postcracking strength. There is a factor of 1.25 to 1.5 between the TEB load and the ultimate load for a reinforced concrete pipe, the factor varying with the pipe diameter.

$$\text{TEB} = \frac{W_D}{B_{fD}} + \frac{W_L}{B_{fL}} \tag{5.33}$$

where W_D = dead load, lb/ft (kN/m)
W_L = live load + impact, lb/ft (kN/m)
B_{fD} = dead load bedding factor (see Table 5.14)
B_{fL} = live load bedding factor (see Table 5.15)

In the application of this equation, if the dead load bedding factor is greater than the live load bedding factor, then the dead load bedding factor should be used in lieu of the live load bedding factor.

Concrete pipe is typically specified by its D-load value (lb/ft/ft or kN/m/m) defined as follows:

$$D\text{-load} = \frac{\text{required TEB}}{D_i} \tag{5.34}$$

where D_i = inside pipe diameter, ft (m)

www.EngineeringEBooksPdf.com

Example: Concrete Pipe Design via Indirect Design. Using the same 60-in (1524-mm) concrete pipe from the previous example, determine the required *D*-load pipe for the 12 ft (3.66 m) of cover using a SIDD Type 2 installation. Assume a 5-in-thick (127-mm) pipe wall.

The earth load was previously determined to be 12,764 lb/ft (186 kN/m). With 12 ft (3.66 m) of cover, the live load is negligible. From Eq. (5.23*a*), the pipe load is

$$\begin{aligned} W_p &= 3.3h\,(D_i + h) \\ &= 3.3\,(5)\,(60 + 5) \\ &= 1073 \text{ lb/ft } (16 \text{ kN/m}) \end{aligned}$$

From Table 5.14, the dead load bedding factor is 2.83; therefore, using Eq. (5.33), the three-edge bearing load is

$$\begin{aligned} \text{TEB} &= \frac{W_D}{B_{\text{fD}}} + \frac{W_L}{B_{\text{fL}}} \\ &= \frac{12{,}764 + 1073}{2.83} \\ &= 4889 \text{ lb/ft } (71 \text{ kN/m}) \end{aligned}$$

and from Eq. (5.34) the required *D*-load is

$$\begin{aligned} D\text{-load} &= \frac{\text{required TEB}}{D_i} \\ &= \frac{4889}{5} \\ &= 978 \text{ lb/ft/ft } (47 \text{ kN/m/m}) \end{aligned}$$

Structural Design of Concrete Pipe by Direct Design. The direct design procedure for analyzing a concrete pipe is based not on empirical methods, but on engineering analysis. Consequently, the engineer may determine precisely what strength of concrete, wall thickness, and reinforcement are necessary. However, the method is more complex and does not lend itself to direct hand calculations. The load on the pipe is determined in the same manner as for indirect design. Then the moments, thrusts, and shears can be calculated. The distribution of the load about the pipe is given by the Heger pressure distribution.

To encourage the use of the direct design method, the ACPA has published, in the *Concrete Pipe Technology Handbook,* a series of charts (see Table 5.16) presenting values of nondimensional coefficients C_{mi}, C_{ni}, and C_{vi} for each of the following load cases:

- Pipe load, W_p
- Earth load, W_e
- Water load, W_f
- Live load, W_L

www.EngineeringEBooksPdf.com

TABLE 5.16 Coefficients for Analysis of Concrete Pipe in Standard Installations

Location	Load type	Coefficients C_{m_i}	C_{n_i}	C_{v_i}
1. Installation type 1				
Invert	W_p	0.225	0.077	
	W_e	0.091	0.188	
	W_f	0.088	−0.445	
	W_{L1}	0.075	0.250	
	W_{L2}	0.165	−0.046	
Crown	W_p	0.079	−0.077	
	W_e	0.083	0.157	
	W_f	0.057	−0.187	
	W_{L1}	0.068	0.200	
	W_{L2}	0.236	0.046	
Springline 90°	W_p	−0.091	0.249	
	W_e	−0.077	0.500	
	W_f	−0.064	−0.068	
	W_{L1}	−0.065	0.500	
	W_{L2}	−0.154	0.500	
Critical shear invert $\theta_v = 12°$	W_p		0.174	0.437
	W_e		0.219	0.143
	W_f		−0.408	0.141
	W_{L1}		0.270	0.150
Critical shear crown $\theta_v = 159°$	W_p		−0.055	0.083
	W_e		0.205	0.117
	W_f		−0.176	0.062
	W_{L1}		0.250	0.100
2. Installation type 2				
Invert	W_p	0.227	0.077	
	W_e	0.122	0.169	
	W_f	0.111	−0.437	
	W_{L1}	0.107	0.205	
	W_{L2}	0.189	−0.035	
Crown	W_p	0.079	−0.077	
	W_e	0.094	0.126	
	W_f	0.062	−0.204	
	W_{L1}	0.080	0.171	
	W_{L2}	0.241	0.035	
Springline 90°	W_p	−0.091	0.249	
	W_e	−0.090	0.500	
	W_f	−0.070	−0.068	
	W_{L1}	−0.078	0.513	
	W_{L2}	−0.160	0.500	

(*Continued*)

www.EngineeringEBooksPdf.com

TABLE 5.16 Coefficients for Analysis of Concrete Pipe in Standard Installations (*Continued*)

2. Installation type 2 (*cont.*)				
		Coefficients		
Location	Load type	C_{m_i}	C_{n_i}	C_{v_i}
Critical	W_p		0.177	0.437
shear	W_e		0.218	0.198
invert	W_f		−0.386	0.193
$\theta_v = 12.3°$	W_{L1}		0.256	0.188
Critical	W_p		−0.050	0.088
shear	W_e		0.185	0.136
crown	W_f		−0.181	0.074
$\theta_v = 157.3°$	W_{L1}		0.205	0.137
3. Installation type 3				
Invert	W_p	0.230	0.077	
	W_e	0.150	0.163	
	W_f	0.133	−0.425	
	W_{L1}	0.136	0.199	
	W_{L2}	0.211	−0.023	
Crown	W_p	0.079	−0.077	
	W_e	0.103	0.107	
	W_f	0.068	−0.215	
	W_{L1}	0.091	0.149	
	W_{L2}	0.247	0.023	
Springline	W_p	−0.097	0.271	
85°	W_e	−0.103	0.500	
	W_f	−0.081	−0.063	
	W_{L1}	−0.126	0.497	
	W_{L2}	−0.155	0.496	
Critical	W_p		0.177	0.437
shear	W_e		0.224	0.249
invert	W_f		−0.363	0.238
$\theta_v = 12.7°$	W_{L1}		0.273	0.224
Critical	W_p		−0.044	0.094
shear	W_e		0.173	0.150
crown	W_f		−0.193	0.085
$\theta_v = 156°$	W_{L1}		0.224	0.124
4. Installation type 4				
Invert	W_p	0.235	0.077	
	W_e	0.191	0.128	
	W_f	0.160	−0.403	
	W_{L1}	0.185	0.152	
	W_{L2}	0.237	−0.004	

(*Continued*)

www.EngineeringEBooksPdf.com

TABLE 5.16 Coefficients for Analysis of Concrete Pipe in Standard Installations (*Continued*)

4. Installation type 4 (*cont.*)				
		Coefficients		
Location	Load type	C_{mi}	C_{ni}	C_{vi}
Crown	W_p	0.079	−0.077	
	W_e	0.118	0.079	
	W_f	0.076	−0.232	
	W_{L1}	0.110	0.114	
	W_{L2}	0.255	0.004	
Springline 80°	W_p	−0.101	0.287	
	W_e	−0.127	0.504	
	W_f	−0.095	−0.057	
	W_{L1}	−0.121	0.495	
	W_{L2}	−0.168	0.492	
Critical shear invert $\theta_v = 14.4°$	W_p		0.188	0.431
	W_e		0.211	0.309
	W_f		−0.323	0.284
	W_{L1}		0.229	0.305
Critical shear crown $\theta_v = 154.2°$	W_p		−0.044	0.100
	W_e		0.151	0.169
	W_f		−0.210	0.096
	W_{L1}		−0.171	0.152

Source: *Concrete Pipe Technology Handbook,* American Concrete Pipe Association, 1994, with permission.

These coefficients are used to directly calculate the pipe wall moments, thrusts, and shears, respectively, for each of the four standard installations. The thrusts and shears can be computed by multiplying the magnitude of the load case by the corresponding C_{ni} and C_{vi} coefficients. The moment calculation is more complex in that the resulting moment is computed by the following equation:

$$M_i = KC_{mi}\frac{W_i D}{2} \tag{5.35}$$

where M_i = moment due to the pertinent load case, lb · ft/ft (kN · m/m)
C_{mi} = moment coefficient for the pertinent load case
W_i = magnitude of the pertinent load case, lb/ft (kN/m)
D = mean pipe diameter, in (mm)
K = 1.0 for U.S. Customary units (0.0121 for SI units)

For more precise calculations, the designer can utilize the FHWA-developed computer program PIPECAR. The program gives calculated moments, thrusts, and shears. It will also design the pipe utilizing either direct or indirect design procedures. After determining the forces acting on the pipe, the wall thickness, concrete strength, and amount of reinforcing can be calculated. The software follows the detailed design provisions in the AASHTO *Standard Specifications for Highway Bridges.*

www.EngineeringEBooksPdf.com

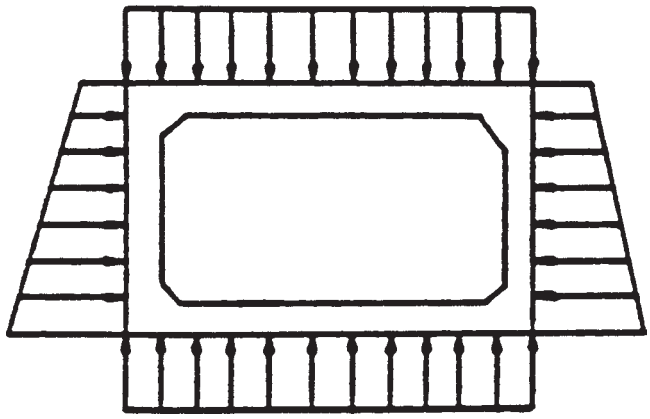

FIGURE 5.38 Pressure distribution used for design of concrete box culverts. (*From "Hydraulic Design of Highway Culverts," Hydraulic Design Series No. 5, FHWA, with permission*)

For a complete discussion on the design of concrete pipe, including methods for designing elliptical and arch-shaped pipe, see *Standard Practice for Direct Design of Buried Concrete Pipe Using Standard Installations (SIDD),* ASCE, 1998; *Concrete Pipe Technology Handbook,* ACPA, 1994; *Concrete Pipe Design Manual,* ACPA, 2007; and *Standard Specifications for Highway Bridges,* AASHTO, 2003.

Structural Design of Boxes and Three-Sided Culverts. The assumed load distribution for reinforced concrete box culverts is shown in Fig. 5.38. The fluid load and structure load are the same as those used for circular concrete pipe (see Art. 5.8.2). The vertical component of the earth load is considered to be the soil prism load. The horizontal component of the earth load is specified by AASHTO such that the structure is designed using both a 30-lb/ft^3 (4.8-kN/m^3) and 60-lb/ft^3 (9.6-kN/m^3) lateral earth pressure. The live load is distributed through the soil cover as discussed in Art. 5.8.3. Three-sided structures are designed using similar load theory except the vertical reaction at the base of the structure is confined to the thickness of the leg.

Box culverts can be designed with either fixed or pinned corners. All box culverts with spans greater than about 8 ft (2.4 m) are designed with fixed corners. Three-sided culverts are generally designed with fixed corners exclusively. Those structures designed with pinned corners are designed for simple beam moments, and the lateral earth pressure of 60 lb/ft^3 (9.6 kN/m^3) is the only condition for which the sidewall need be designed. Because fixed corners transfer moments around the corners, applying the 60-lb/ft^3 (9.6-kN/m^3) lateral pressure will reduce the positive moments in the adjacent members when compared with the application of 30 lb/ft^3 (4.8 kN/m^3). For this reason, structures with fixed corners must be designed for both lateral load conditions to ensure that all maximum moments in each member are found. Table 5.17 indicates the loading conditions that generally control the design of the top slab and side walls of concrete box culverts for moment and shear. After determining maximum moments and shears, the designer may utilize standard principles of reinforced concrete design to size the members and calculate the necessary reinforcement.

As is evident from the foregoing, and is true for any structural design, many different loading conditions must be investigated to ensure the maximum stresses are determined. To reduce design time, the FHWA has developed the computer program BOXCAR,

www.EngineeringEBooksPdf.com

TABLE 5.17 Loading Conditions That Generally Control Design of Concrete Box Culverts for Moment and Shear

Member	Live load position	Lateral pressure, lb/ft^3	Lateral pressure, kN/m^3	Type of moment
Top slab	0.5 of span length	30	4.8	Positive
Top slab and sidewall	0.3 of span length	60	9.6	Negative
Sidewall	No live load	60	9.6	Positive

which may be used for the structural analysis and design of reinforced concrete box culverts.

Structural Design of Cast-in-Place Pipe. Because cast-in-place concrete pipe has no reinforcement, its flexural strength is limited. In this type of structure, the effects of the compression on the member keep the effects of the moment below the modulus of rupture of the concrete, and no reinforcing is necessary. Also, because it is cast against the ground at the invert and walls, it has excellent bedding conditions, and this contributes to a reduction in moments, thrusts, and shears.

The moments, thrust, and shears can be calculated using the uniform load system developed by J. M. Paris. This system provides a method for determining maximum stresses through the application of nondimensional load coefficients, similar to the direct design of concrete pipe. As indicated in Fig. 5.39 the C_m coefficients are multiplied by the load and the mean radius to obtain the moment, and the C_v and C_n coefficients are multiplied by the load to obtain shears and thrusts.

Once these have been determined, normal stresses can be calculated from the fundamental equation

$$f_c = \frac{T}{A} \pm \frac{Mc}{I} \tag{5.36}$$

where f_c = concrete stress, lb/in^2 (MPa)
T = thrust, lb/in (N/mm)
A = wall area, in^2/in (mm^2/mm)
M = bending moment, in · lb/in (mm · N/mm)
c = distance from neutral axis to extreme fiber, in (mm)
I = moment of inertia of wall, in^4/in (mm^4/mm)

Because the concrete is unreinforced, the stress may not exceed the modulus of rupture of the concrete adjusted by an appropriate safety factor. The FHWA recommends that the use of cast-in-place pipe on federal-aid highway projects be monitored through experimental projects in locations under roadways or with moderate to high fills.

Structural Design of Special Shapes. Most of the special shape structures are considered soil-structure interaction systems and require complex structural analysis. They are typically analyzed using the finite-element method. Design is then completed using standard principles of reinforced concrete design. The manufacturers' of these structures maintain a catalog of designs for common size and loading conditions.

5.8.4 Corrugated Metal Pipe

Introduction. Corrugated metal structures are typically manufactured of either steel or aluminum. These structures are generally designed for ring thrust by a semiempirical method that includes checks for wall area, buckling, and seam strength. A check is also

www.EngineeringEBooksPdf.com

UNIFORM LOAD ON 180° TOP

	Conc. Support at Invert			θ = 60°			θ = 90°			θ = 120°			θ = 180°		
	C_m	C_n	C_v	C_m	C_n	C_v	C_m	C_n	C_v	C_m	C_n	C_v	C_m	C_n	C_v
TOP	+.1495	-.0530	0	+.1435	-.0400	0	+.1368	-.0268	0	+.1304	-.0132	0	+.1250	0	0
SIDE	-.1535	+.5000	+.0530	-.1465	+.5000	+.0400	-.1401	+.5000	+.0268	-.1327	+.5000	+.0132	-.1250	+.5000	0
INVERT	+.2935	+.0530	±.5000	+.1885	+.0400	0	+.1572	+.0268	0	+.1376	+.0132	0	+.1250	0	0

UNIFORM LOAD ON 90° TOP

	Conc. Support at Invert			θ = 60°			θ = 90°			θ = 120°			θ = 180°		
	C_m	C_n	C_v	C_m	C_n	C_v	C_m	C_n	C_v	C_m	C_n	C_v	C_m	C_n	C_v
TOP	+.1817	.0262	0	+.1757	-.0132	0	+.1690	0	0	+.1627	+.0136	0	+.1572	+.0269	0
SIDE	-.1683	+.5000	+.0262	-.1613	+.5000	+.0132	-.1549	+.5000	0	-.1475	+.5000	-.0136	-.1398	+.5000	-.0269
INVERT	+.3055	+.0262	±.5000	+.2005	+.0132	0	+.1690	0	0	+.1496	-.0136	0	+.1370	-.0269	0

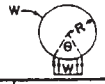

LOADING DUE TO WEIGHT OF RING

	Conc. Support at Invert			θ = 60°			θ = 90°			θ = 120°			θ = 180°		
	C_m	C_n	C_v	C_m	C_n	C_v	C_m	C_n	C_v	C_m	C_n	C_v	C_m	C_n	C_v
TOP	+.0796	-.0796	0	+.0736	-.0666	0	+.0669	-.0534	0	+.0606	-.0389	0	+.0551	-.0266	0
SIDE	-.0909	+.2500	+.0796	-.0839	+.2500	+.0667	-.0775	+.2500	+.0536	-.0701	+.2500	+.0399	-.0624	+.2500	-.0267
INVERT	+.2389	+.0796	±.5000	+.1339	+.0666	0	+.1025	+.0534	0	+.0829	+.0389	0	+.0704	+.0266	0

LOADING DUE TO WATER; PIPE FULL, ZERO PRESSURE HEAD ON SOFFIT

	Conc. Support at Invert			θ = 60°			θ = 90°			θ = 120°			θ = 180°		
	C_m	C_n	C_v	C_m	C_n	C_v	C_m	C_n	C_v	C_m	C_n	C_v	C_m	C_n	C_v
TOP	+.0796	-.2389	0	+.0736	-.2257	0	+.0669	-.2124	0	+.0606	-.1991	0	+.0551	-.1859	0
SIDE	-.0909	-.0680	+.0797	-.0836	-.0680	+.0667	-.0775	-.0680	+.0532	-.0701	-.0680	+.0399	-.0624	-.0680	+.0267
INVERT	+.2389	-.3981	±.5000	+.1337	-.4109	0	+.1025	-.4243	0	+.0829	-.4379	0	+.0704	-.4511	0

	C_m	C_n	C_v
TOP	-.1250	+.5000	0
SIDE	+.1250	0	0
INVERT	-.1250	±.5000	0

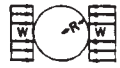

UNIFORM LOAD ON SIDES

TRIANGULAR LOAD ON SIDES

	C_m	C_n	C_v
TOP	-.1042	+.3125	0
SIDE	+.1250	0	-.0625
INVERT	-.1458	+.6875	0

FIGURE 5.39 Coefficients for calculating moment (M), thrust (N), and shear (V) in concrete pipe under linear pressure distributions. The coefficients used are as follows: $M = C_m WR$, $N = C_n W$, $V = C_v W$, where W is total load in each case and R is mean radius. *Sign convention:* $+M$ is tension on inside face, $+N$ is compression, $+V$ is positive shear for left side. (*From J. M. Paris, "Stress Coefficients for Large Horizontal Pipes,"* Engineering News Record, *vol. 87, no. 19, November 10, 1921, with permission*)

made to ensure the structure has sufficient rigidity to withstand handling and installation forces. Computer programs for the design of corrugated steel pipe are available from the National Corrugated Steel Pipe Association, located in Dallas, Texas. Corrugated metal structures may also be designed using finite-element computer programs that model both the structure and the soil. The design procedure for metal box culverts and long-span structures differ somewhat from those of other corrugated metal structures.

Various methods are available for the design of corrugated metal pipe, arches, and pipe arches. Service load design is implemented by the use of safety factors that are applied to the yield stress, buckling stress, or seam strength to determine an allowable stress. Load factor design is utilized by applying load factors (β and γ) to the dead and

www.EngineeringEBooksPdf.com

TABLE 5.18 Moment of Inertia and Cross-Sectional Area of Corrugated Steel Pipe

Corrugation pitch × depth, in	Specified thickness, in*									
	0.052	0.064	0.079	0.109	0.138	0.168	0.188	0.218	0.249	0.280
				0.111	0.140	0.170				
	Moment of inertia I, in^4 per ft of width									
1½ × ¼	0.0041	0.0053	0.0068	0.0103	0.0145	0.0196				
2 × ½	0.0184	0.0233	0.0295	0.0425	0.0586	0.0719				
2⅔ × ½	0.0180	0.0227	0.0287	0.0411	0.0544	0.0687				
3 × 1	0.0827	0.1039	0.1306	0.1855	0.2421	0.3010				
5 × 1		0.1062	0.1331	0.1878	0.2438	0.3011				
6 × 2				0.725	0.938	1.154	1.296	1.523	1.754	1.990
¾ × ¾ × 7½†		0.0431	0.0569	0.0858	0.1157					
¾ × 1 × 11½†		0.0550	0.0730	0.1111						
	Cross-sectional wall area A, in^2 per ft of width									
1½ × ¼	0.608	0.761	0.950	1.331	1.712	2.093				
2 × ½	0.652	0.815	1.019	1.428	1.838	2.249				
2⅔ × ½	0.619	0.775	0.968	1.356	1.744	2.133				
3 × 1	0.711	0.890	1.113	1.560	2.008	2.458				
5 × 1		0.794	0.992	1.390	1.788	2.196				
6 × 2				1.556	2.003	2.449	2.739	3.199	3.658	4.119
¾ × ¾ × 7½†		0.511	0.715	1.192	1.729					
¾ × 1 × 11½†		0.374	0.524	0.883						

Conversions: 1 in = 25.4 mm, 1 in^4/ft = 1366 mm^4/mm, 1 in^2/ft = 2.117 mm^2/mm.

*Where two thicknesses are shown, top is corrugated steel pipe and bottom is structural plate.

†Ribbed pipe. Properties are effective values.

Source: From *Handbook of Steel Drainage and Highway Construction Products,* American Iron and Steel Institute, 1994, with permission.

www.EngineeringEBooksPdf.com

live loads and allowing the design stresses to approach the yield stress of the material adjusted by a capacity reduction factor (ϕ). Load and Resistance Factor Design (LRFD) is similar but differs in details.

The calculations include checks for wall area, buckling, and installation strength. In addition, the seam strength must be checked for annular corrugated and structural-plate pipe, arches, and pipe arches.

Values for moments of inertia and wall area of steel products are given in Table 5.18, and minimum longitudinal seam strengths for steel structural plate are given in Table 5.19. Data for aluminum products can be found in the AASHTO specifications.

Loads on Corrugated Metal Pipe. As discussed in Art. 5.8.2, live loads are distributed through the cover above the top of the pipe. In lieu of more exact computations, the live load pressures given in Table 5.20 are often used. The table also includes pressures for an H 25 wheel load, which is 25 percent greater than the H 20 wheel load, and an E 80 railway loading. All of the pressures in the table include an impact allowance for shallow cover.

TABLE 5.19 Minimum Longitudinal Seam Strength for 6- × 2-in Steel Structural Plate

	Minimum seam strength, kip/ft (kN/m) for indicated bolt pattern		
Specified thickness, in (mm)	2 bolts per corrugation	3 bolts per corrugation	4 bolts per corrugation
0.111 (2.82)	43 (627)		
0.140 (3.56)	62 (905)		
0.170 (4.32)	81 (1182)		
0.188 (4.79)	93 (1357)		
0.218 (5.54)	112 (1634)		
0.249 (6.32)	132 (1926)		
0.280 (7.11)	144 (2101)	180 (2026)	194 (2830)

Source: Based on *Standard Specifications for Highway Bridges,* AASHTO.

TABLE 5.20 Highway and Railway Live Loads

Highway loading*			Railway E 80 loading*	
	Load, lb/ft^2 (kPa)			
Depth of cover, ft (m)	H 20	H 25	Depth of cover, ft (m)	Load, lb/ft^2 (kPa)
1 (0.30)	1800 (86.2)	2280 (109.2)	2 (0.61)	3800 (181.9)
2 (0.61)	800 (38.3)	1150 (55.1)	5 (1.52)	2400 (114.9)
3 (0.91)	600 (28.7)	720 (34.5)	8 (2.44)	1600 (76.6)
4 (1.22)	400 (19.2)	470 (22.5)	10 (3.05)	1100 (52.7)
5 (1.52)	250 (12.0)	330 (15.8)	12 (3.66)	800 (38.3)
6 (1.83)	200 (9.6)	240 (11.5)	15 (4.57)	600 (28.7)
7 (2.13)	175 (8.4)	180 (8.6)	20 (6.10)	300 (14.4)
8 (2.44)	100 (4.8)	140 (6.7)	30 (9.14)	100 (4.8)
9 (2.74)	—	110 (5.3)	—	—

*See ASTM A796. Neglect live load when less than 100 lb/ft^2 (4.8 kPa); use dead load only.

Source: From *Handbook of Steel Drainage and Highway Construction Products,* American Iron and Steel Institute, 1994, with permission.

www.EngineeringEBooksPdf.com

The earth load is considered to be the full soil prism load. This is because the vertical arching factor for corrugated metal pipe is nearly unity.

AASHTO calculations for load (pressure) are as follows. The design load pressure, P, for service load design is the sum of the applicable live load plus impact and earth load. For load factor design, the design load is calculated by multiplying the dead load by a β factor of 1.5 and the live load by a factor of 1.67. The summation of the dead load and live load is then multiplied by a γ factor of 1.3.

Structural Design of Pipe by Service Load Design. Calculations for factory-corrugated or structural-plate structures proceed as follows: The thrust in the pipe wall is

$$T = P\left(\frac{S}{2}\right) \tag{5.37}$$

where T = wall thrust, lb/ft (kN/m)
P = design load pressure, lb/ft^2 (kPa)
S = pipe diameter or span, ft (m)

The required wall area to resist the thrust is

$$A = \frac{T}{f_a} \tag{5.38}$$

where A = required wall area, in^2/ft (mm^2/mm)
f_a = allowable stress, lb/in^2 (MPa) = f_y/SF = minimum yield stress (lb/in^2) (MPa) divided by safety factor (2.0)

For steel, f_y = 33,000 lb/in^2 (230 MPa); for aluminum, f_y = 24,000 lb/in^2 (170 MPa).

After selecting a corrugation profile and sheet thickness, check for possible wall buckling. If the buckling stress f_{cr} is less than the minimum yield stress, recalculate the required wall area using f_{cr} for the yield stress in lieu of f_y. The buckling stress is given by the following equations:

If

$$S < \frac{r}{k}\sqrt{\frac{24E_m}{f_u}} \qquad \text{then} \qquad f_{cr} = f_u - \frac{f_u^2}{48E_m}\left(\frac{kS}{r}\right)^2 \tag{5.39}$$

If

$$S \geq \frac{R}{k}\sqrt{\frac{24E_m}{f_u}} \qquad \text{then} \qquad f_{cr} = \frac{12E_m}{\left(\frac{kS}{r}\right)^2} \tag{5.40}$$

where f_{cr} = critical buckling stress, lb/in^2 (MPa)
f_u = 45,000 lb/in^2 (steel pipe) (310 MPa)
= 31,000 lb/in^2 (aluminum pipe) (210 MPa)
= 35,000 lb/in^2 (240 MPa) (aluminum structural plate 0.100–0.175 in or 2.54–4.44 mm thick)
= 34,000 lb/in^2 (235 MPa) (aluminum structural plate 0.176–0.250 in or 4.47–63.5 mm thick)
k = soil stiffness factor = 0.22
S = pipe diameter or span, in (mm)
r = radius of gyration of corrugation = $\sqrt{I/A}$, in (mm)

www.EngineeringEBooksPdf.com

E_m = modulus of elasticity of metal, lb/in^2 (MPa)
= 29,000,000 lb/in^2 (2000 × 10^3 MPa) (steel) or 10,000,000 lb/in^2 (69 × 10^3 MPa) (aluminum)
I = moment of inertia of corrugation, in^4/in (mm^4/mm)
A = cross-sectional area of corrugation, in^2/in (mm^2/mm)

Pipe with annular corrugations is fabricated with longitudinal seams, and a seam strength check is required. Helically corrugated pipe has no longitudinal seams, and therefore such a check is not required. For pipe fabricated with longitudinal seams, the required seam strength is

$$\text{SS} = T\,(\text{SF}) \tag{5.41}$$

where SS = required seam strength, lb/ft (kN/m)
T = wall thrust, lb/ft (kN/m)
SF = safety factor = 3.0

Check handling and installation rigidity by calculating the flexibility factor FF, in/lb:

$$\text{FF} = \frac{S^2}{E_m I} \tag{5.42}$$

where terms are as defined above. Limit FF to the values listed in Table 5.21.

Example: Corrugated Steel Pipe Design via Service Load Design. A 48-in-diameter (1200-mm) culvert is required for a site with 6 ft (1.83 m) of cover and an HS 20 live load. Determine a suitable corrugation and sheet thickness. Use factory-corrugated pipe with a helical lock seam.

TABLE 5.21 Maximum Flexibility Factors for Metal Culverts

Material	Corrugation	Flexibility factor, in/lb
Steel	¼ and ½ in deep	4.3×10^{-2}
Steel	1 in deep	3.3×10^{-2}
Aluminum	¼ and ½ in deep	3.1×10^{-2} (0.060 in thick) 6.1×10^{-2} (0.075 in thick) 9.2×10^{-2} (>0.060 in thick)
Aluminum	1 in deep	3.3×10^{-2}
Steel and aluminum	Spiral rib pipe	Varies with I and with type of installation. See AASHTO *Standard Specifications for Highway Bridges.*
Steel	6 × 2 in	2.0×10^{-2} (pipe) 3.0×10^{-2} (pipe-arch) 3.0×10^{-2} (arch)
Aluminum	9 × 2½ in	2.5×10^{-2} (pipe) 3.6×10^{-2} (pipe-arch) 3.6×10^{-2} (arch)

Conversions: 1 in = 25.4 mm, 1 in/lb = 5.70 mm/N.

Source: Based on *Standard Specifications for Highway Bridges,* AASHTO.

www.EngineeringEBooksPdf.com

First calculate the design load as follows: From Table 5.20, the live load pressure for the 6 ft (1.83 m) of cover is 200 lb/ft^2 (9.6 kPa). The earth load pressure is the pressure from the soil prism load, Eq. (5.26):

$$W_E = W_c = \gamma\left[H + \frac{D_o(4 - \pi)}{8}\right]$$

$$= 120\left[6 + \frac{4(4 - \pi)}{8}\right] = 771.6 \text{ lb/ft}^2 \text{ (36.9 kPa)}$$

The design load pressure is the sum of these loads:

$$P = 771.6 + 200 = 971.6 \text{ lb/ft}^2 \text{ (46.5 kPa)}$$

Then, from Eq. (5.37), the thrust in the pipe wall is

$$T = P\left(\frac{S}{2}\right)$$

$$= 971.6\left(\frac{4}{2}\right)$$

$$= 1943 \text{ lb/ft (28.4 kN/m)}$$

From Eq. (5.38), the required wall area to resist the thrust is

$$A = \frac{T}{f_a}$$

$$= \frac{1943}{33{,}000/2}$$

$$= 0.118 \text{ in}^2\text{/ft (0.250 mm}^2\text{/mm)}$$

From Table 5.18 make a tentative selection of corrugation profile and sheet thickness as follows: 2⅔-in (68-mm) × ½-in (13-mm) corrugation profile, 0.064-in (1.63 mm) thickness. Properties are

$$A = 0.775 \text{ in}^2\text{/ft} = \frac{0.775 \text{ in}^2\text{/ft}}{12} = 0.0646 \text{ in}^2\text{/in (0.137 mm}^2\text{/mm)}$$

$$\geq 0.118 \text{ in}^2\text{/ft required (0.250 mm}^2\text{/mm)}$$

$$I = 0.0227 \text{ in}^4\text{/ft} = \frac{0.0227 \text{ in}^4\text{/ft}}{12} = 0.00189 \text{ in}^4\text{/in (31.0 mm}^4\text{/mm)}$$

$$r = \sqrt{I/A} = \sqrt{0.00189/0.0646} = 0.171 \text{ in (4.34 mm)}$$

www.EngineeringEBooksPdf.com

Next, check the buckling stress. To determine whether Eq. (5.39) or (5.40) applies, compare the span (48 in or 1200 mm) with

$$\frac{r}{k}\sqrt{\frac{24E_m}{f_u}} = \frac{0.171}{0.22}\sqrt{\frac{24(29 \times 10^6)}{4500}} = 96.7 \text{ in (2456 mm)}$$

Because $S < 96.7$ in, Eq. (5.39) applies. The buckling stress is

$$f_{cr} = f_u - \frac{f_u^2}{48E_m}\left(\frac{kS}{r}\right)^2 = 45{,}000 - \frac{45{,}000^2}{48(29 \times 10^6)}\left(\frac{0.22(48)}{0.171}\right)^2$$

$$= 39{,}500 \text{ lb/in}^2 \text{ (272 MPa)}$$

Compare this with the yield stress, $f_y = 33{,}000$ lb/in^2. Because $f_{cr} > f_y$, buckling does not control. Also, because there are no longitudinal seams, the seam strength check does not apply. Finally, check handling and installation rigidity by calculating the flexibility factor. From Eq. (5.42):

$$\text{FF} = \frac{S^2}{E_m I} = \frac{48^2}{(29 \times 10^6)0.00189} = 4.2 \times 10^{-2} \text{in/lb (0.239 mm/N)}$$

Table 5.21 gives the maximum value of FF for this profile as 4.3×10^{-2} in/lb (0.245 mm/N). Therefore, the design is satisfactory. Select the 2⅔-in (68-mm) × ½-in (13-mm) corrugation profile with a 0.064-in (1.63 mm) sheet thickness.

Structural Design of Pipe by Load Factor Design. Calculations proceed as follows. The thrust in the pipe wall is

$$T_L = P_L\left(\frac{S}{2}\right) \tag{5.43}$$

where T_L = factored thrust, lb/ft (kN/m)
P_L = factored load pressure, lb/ft^2 (kPa)
S = pipe diameter or span, ft(m)

The required wall area to resist the thrust is

$$A = \frac{T_L}{\phi f_y} \tag{5.44}$$

where A = required wall area, in^2/ft (mm^2/mm)
f_y = minimum yield stress, lb/in^2 (MPa)
ϕ = capacity modification factor
= 1.00 for helical pipe with lock seams or fully welded seams
= 0.67 for annular pipe with spot-welded, riveted, or bolted seams (including structural-plate pipe)

www.EngineeringEBooksPdf.com

After selecting a corrugation profile and sheet thickness, check for possible buckling. If the buckling stress f_{cr} is less than the yield stress, recalculate the area using f_{cr} in lieu of f_y. The buckling stress is given by Eqs. (5.39) and (5.40). For pipe with longitudinal seams, the required seam strength SS, lb/ft, is

$$\mathrm{SS} = \frac{T_L}{\phi} \tag{5.45}$$

where ϕ is as given for Eq. (5.44). Check the flexibility factor by Eq. (5.42) and Table 5.21.

Example: Corrugated Steel Pipe Design via Load Factor Design. For the 48-in-diameter (1200-mm) culvert in the preceding example, determine a suitable corrugation and sheet thickness for the culvert.

First, calculate the factored load as follows:

$$\begin{aligned} P_L &= \gamma(\beta_E P_{\mathrm{EL}} + \beta_E P_{\mathrm{LL+I}}) \\ &= 1.3\ (1.5 \times 771.6 + 1.67 \times 200) \\ &= 1938.8\ \mathrm{lb/ft^2}\ (92.8\ \mathrm{kPa}) \end{aligned}$$

Then, from Eq. (5.43), the factored thrust in the pipe wall is

$$\begin{aligned} T_L &= P_L\left(\frac{S}{2}\right) \\ &= 1938.8\left(\frac{4}{2}\right) \\ &= 3877.6\ \mathrm{lb/ft}\ (56.6\ \mathrm{kN/m}) \end{aligned}$$

From Eq. (5.44), the required wall area to resist the thrust is

$$\begin{aligned} A &= \frac{T_L}{\phi f_y} \\ &= \frac{3877.6}{1.0\ (33{,}000)} \\ &= 0.118\ \mathrm{in^2/ft}\ (0.250\ \mathrm{mm^2/mm}) \end{aligned}$$

The remaining checks are similar to those for service load design. It can be seen that a satisfactory design is provided with the 2⅔-in (68-mm) × ½-in (13-mm) corrugation profile with a 0.064-in (1.63-mm) sheet thickness.

Pipe-Arch Design. The pipe-arch type of steel or aluminum culvert exerts high pressures at the corner radii, as illustrated in Fig. 5.40. For this reason, in addition to the need for designing a pipe to withstand the imposed loads, the soil at the corner radii must

www.EngineeringEBooksPdf.com

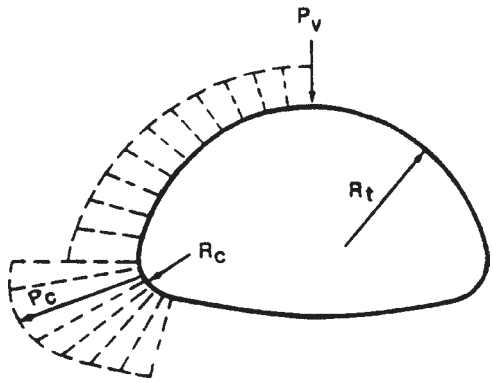

FIGURE 5.40 Pressure distribution assumed in design of metal pipe arches. (*From* Handbook of Steel Drainage and Highway Construction Products, *American Iron and Steel Institute, 1994, with permission*)

be able to withstand the high bearing pressures applied to it. The anticipated corner pressure for an HS 20 live load can be calculated as follows:

$$P_c = \frac{(C_1 P_{LL} + P_{EL})\, r_l}{r_c} \tag{5.46}$$

where $C_1 = \dfrac{L_1}{L_2}$ when $L_2 \leq 72$ in

$C_1 = 2\,\dfrac{L_1}{L_3}$ when $L_2 > 72$ in

P_c = corner pressure, lb/ft^2 (kPa)
r_l = radius of the pipe-arch crown, in (mm)
r_c = corner radius of the pipe arch, in (mm)
$L_1 = 40 + (h - 12)\,1.75$
$L_2 = L_1 + 1.37s$
$L_3 = L_2 + 72$
h = height of cover, in (mm)
s = pipe span, in (mm)

In the application of the corner pressure equation, live load impact is not considered. Therefore, the live load pressures given in Table 5.20 should be modified to remove the impact effects. Also, in lieu of the described calculations, C_1 can conservatively be assumed to be 1.

Structural Design of Long-Span and Box Culverts. Structural-plate structures that cannot, because of their long span, meet the design requirements for structural-plate pipe structures are defined as *long-span* structural-plate structures. These structures, which often serve as short-span bridges, are not required to meet buckling or flexibility requirements but must have certain special features (see Art. 5.6.2). The required wall area of the corrugated metal plate is determined by the same method as for other corrugated metal pipe—Eq. (5.38) or Eq. (5.44)—but the span in the equations is replaced by twice the

www.EngineeringEBooksPdf.com

radius of the top arc. In addition, certain minimum thicknesses that have been found satisfactory through experience are specified by AASHTO for the top-arc plate. Also, the structure must exhibit special features accepted by AASHTO. The design requirements for long-span structures have been based not on an analytical analysis of the soil-structure interaction system, but upon experience with successful installations. There is ongoing research to provide for an analytical and reasonably simple method for the design of these structures.

Corrugated metal box culverts are fabricated from corrugated metal structural plate. The effects of moments on structural-plate box culverts controls over those of thrust. Because of this, box culverts typically require external stiffeners comprised of steel or aluminum structural sections bolted to the exterior of the box culvert. Rib stiffeners are spaced at not less than 2 ft (0.6 m) along the crown and not less than 4.5 ft (1.4 m) along the haunch. Design moments may be calculated from simple tables provided in AASHTO and compared against allowable moments supplied by the manufacturer of the product. Similar to any rigid frame, the moment distribution between the haunch and crown is a function of their relative stiffness. Stiffening one member attracts additional moment, thus shedding moment from the other. In the design of corrugated metal box culverts, the proportioning of the moment is critical to the success of the design. AASHTO provides a proportioning factor along with limiting values to ensure proper moment distribution. Unlike long-span structures, for which the design methodology is based more on experience than analysis, design procedures for metal box culverts have been developed from finite element analysis. The moment capacity includes the consideration of the plastic moment resistance of the structural plate and rib stiffeners.

5.8.5 Plastic Pipe

Introduction. Gravity flow thermoplastic pipes used in highway drainage applications are typically manufactured of high-density polyethylene (HDPE) or polyvinyl chloride (PVC). To a lesser extent acrylonitrile-butadiene-styrene (ABS) pipe is also used but is limited to drain, waste, and vent applications. Plastic pipes are always circular in cross-section. They may be either of a solid wall or profile wall design. These structures are generally designed for ring thrust by a semiempirical method that includes checks for wall area, buckling, and wall stress and strain. A check is also made to ensure the structure has sufficient rigidity to withstand handling and installation forces. Thermoplastic pipes may also be designed using finite-element computer programs that model both the structure and the soil. One such program, CANDE ("Culvert Analysis and Design," PC-TRANS, Kansas University Transportation Center, Lawrence), includes a solution based on the theoretical work of Burns and Richard ("Attenuation of Stresses for Buried Cylinders," Proceedings of Symposium on Soil-Structure Interaction, University of Arizona, Tucson, 1964). The Burns and Richard solution is derived from generalized shell theory. The authors derived equations using a linear elastic shell in a linear elastic medium. While a thermoplastic pipe buried in soil is not a linear elastic shell in a linear elastic medium, the derived equations have been shown to have general suitability for deep burial conditions.

The current design specifications for thermoplastic pipes are rapidly evolving. There is significant research in the areas of profile design, material quality control, and long-term pipe response. One particularly interesting area is the area of profile design. Thermoplastic pipes, with the multitude of wall profiles, can be vulnerable to local wall buckling. While a localized wall buckle will rarely lead to pipe failure, it can reduce the effective physical properties of the pipe profile. AASHTO has adopted equations for determining the postbuckling physical properties of the pipe profile.

www.EngineeringEBooksPdf.com

There has been no standardization of the wall profiles. Manufacturers have significant leeway in designing the pipe wall profile. General mechanical and physical properties of the more common thermoplastic materials are given in Tables 5.22 and 5.23. Because of this lack of standardization, the values in the tables do not necessarily represent any manufactured pipe products, but rather are the critical design values for

TABLE 5.22 Dimensional Data for Plastic Pipes

A. PE corrugated pipes (AASHTO M 294)

Nominal size, in	Min. I.D., in	Max. O.D., in	Min. *A*, in^2/ft	Min. *C*, in	Min. *I*, in^4/in
12	11.8	14.7	1.5	0.35	0.024
15	14.8	18.0	1.9	0.45	0.053
18	17.7	21.5	2.3	0.50	0.062
24	23.6	28.7	3.1	0.65	0.116
30	29.5	36.4	3.9	0.75	0.163
36	35.5	42.5	4.5	0.90	0.222
42*	41.5	48.0	4.69	1.11	0.543
48*	47.5	55.0	5.15	1.15	0.543

B. PE ribbed pipes (ASTM F 894)

Nominal size, in	Min. I.D., in	Max. O.D., in	Min. *A*, in^2/ft	Min. *C*, in	Min. *I*, in^4/in	
					Cell class 334433C	Cell class 335434C
18	17.8	21.0	2.96	0.344	0.052	0.038
21	20.8	24.2	4.15	0.409	0.070	0.051
24	23.8	27.2	4.66	0.429	0.081	0.059
27	26.75	30.3	5.91	0.520	0.125	0.091
30	29.75	33.5	5.91	0.520	0.125	0.091
33	32.75	37.2	6.99	0.594	0.161	0.132
36	35.75	40.3	8.08	0.640	0.202	0.165
42	41.75	47.1	7.81	0.714	0.277	0.227
48	47.75	53.1	8.82	0.786	0.338	0.277

C. PVC profile wall pipes (AASHTO M 304)

Nominal size, in	Min. I.D., in	Max. O.D., in	Min. *A*, in^2/ft	Min. *C*, in	Min. *I*, in^4/in	
					Cell class 12454C	Cell class 12364C
12	11.7	13.6	1.20	0.15	0.004	0.003
15	14.3	16.5	1.30	0.17	0.006	0.005
18	17.5	20.0	1.60	0.18	0.009	0.008
21	20.6	23.0	1.80	0.21	0.012	0.011
24	23.4	26.0	1.95	0.23	0.016	0.015
30	29.4	32.8	2.30	0.27	0.024	0.020
36	35.3	39.5	2.60	0.31	0.035	0.031
42	41.3	46.0	2.90	0.34	0.047	0.043
48	47.3	52.0	3.16	0.37	0.061	0.056

Conversions: 1 in = 25.4 mm, 1 in^2/ft = 2.117 mm^2/mm, 1 in^4/in = 16,387 mm^4/mm.

*These sizes are covered in AASHTO Provisional Standard Specification for Corrugated Polyethylene Pipe, AASHTO Designation MP6-95.

Source: *Standard Specifications for Highway Bridges,* AASHTO, with permission.

www.EngineeringEBooksPdf.com

TABLE 5.23 Minimum Mechanical Properties for Design of Plastic Pipe

Type of pipe	ASTM minimum cell class	Allowable long-term strain, %	Initial		50-yr	
			F_u min., kip/in^2	E min., kip/in^2	F_u min., kip/in^2	E min., kip/in^2
Solid-wall PE pipe—ASTM F 714	D 3350, 335434C	5.0	3.0	110	1.44	22.0
Corrugated PE pipe—AASHTO M 294	D 3350, 335420C	5.0	3.0	110	0.90	22.0
Profile PE pipe—ASTM F 894	D 3350, 334433C	5.0	3.0	80	1.12	20.0
	D 3350, 335434C	5.0	3.0	110	1.44	22.0
Solid-wall PVC pipe—AASHTO M 278, ASTM F 679	D 1784, 12454C	5.0	7.0	400	3.70	140.0
	D 1784, 12364C	3.5	6.0	440	2.60	158.4
Profile PVC pipe—AASHTO M 304	D 1784, 12454C	5.0	7.0	400	3.70	140.0
	D 1784, 12364C	3.5	6.0	440	2.60	158.4

Conversion: 1 kip/in^2 = 6.895 MPa.

Source: Based on *Standard Specifications for Highway Bridges,* AASHTO.

each property. It is highly unlikely that any one product could be produced to meet all of these minimum values. Material and physical properties for a specific pipe product should be obtained from the pipe manufacturer. The tables list both long-term and initial values for tensile strength and modulus of elasticity. Use short-term values for determining the response of the pipe to live loads. Use long-term values for determining the buckling capacity of the pipe. In determining the thrust response, use short-term values if the full soil prism is used for the dead load, and use long-term values if the dead load is factored through the use of the vertical arching factor.

Loads on Plastic Pipe. As discussed in Art. 5.8.2, live loads are distributed through the cover above the top of the pipe. In lieu of more exact computations, the live load pressures used for corrugated metal pipe, given in Table 5.19, can be used. The table also includes pressures for an H 25 wheel load, which is 25 percent greater than the H 20 wheel load, and an E 80 railway loading. All of the pressures in the table include an impact allowance for shallow cover.

Earth loads on flexible pipes can be highly variable. An investigation of the theoretical work of Burns and Richard by Dr. T. McGrath revealed that the pipe hoop stiffness is the critical factor in determining the pressure distribution about the pipe. The earth load on a thermoplastic pipe can be stated as a proportion of the soil prism load, similar to concrete and corrugated metal pipes. Based on the previously mentioned work of McGrath, the vertical arching factor (VAF) for thermoplastic pipes is

$$\text{VAF} = \frac{S_H - 1.17}{S_H + 2.92} \tag{5.47}$$

www.EngineeringEBooksPdf.com

with

$$S_H = \frac{M_s R}{EA} \tag{5.48}$$

where S_H = hoop stiffness factor
M_S = constrained soil modulus, lb/in^2 (see Table 5.24)
R = radius to centroid of pipe, in
E = long-term, 50-year modulus of elasticity, lb/in^2
A = cross-sectional area of corrugation, in^2/ft

In determining the dead load on the pipe, the designer may use either the soil prism load or the load factored through the use of the vertical arching factor. If the factored load is used, AASHTO requires a check of the local stability of the profile wall section. The details of the local stability check can be found in the AASHTO publication

TABLE 5.24 Design Values for Constrained Soil Modulus, M_s

	Soil type and compaction condition			
Stress level, lb/ft^2	Sn-100, lb/in^2	Sn-95, lb/in^2	Sn-90, lb/in^2	Sn-85, lb/in^2
150	2350	2000	1275	470
750	3450	2600	1500	520
1500	4200	3000	1625	570
3000	5500	3450	1800	650
6000	7500	4251	2100	825
9000	9300	5000	2500	1000
		Si-95, lb/in^2	Si-90, lb/in^2	Si-85, lb/in^2
150		1415	670	360
750		1670	740	390
1500		1770	750	400
3000		1880	790	430
6000		2090	900	510
		Cl-95, lb/in^2	Cl-90, lb/in^2	Cl-85, lb/in^2
150		533	255	130
750		625	320	175
1500		690	355	200
3000		740	395	230
6000		815	460	285
9000		895	525	345

Conversions: 1 lb/ft^2 = 0.0479 kPa, 1 lb/in^2 = 6.895×10^{-3} MPa.

Notes: (1) The soil types are defined by a two-letter designation that indicate general soil classification, Sn for sands and gravels, Si for silts, and Cl for clays. Specific soil groups that fall into these categories should be based on ASTM D 2487 and AASHTO M 145. (2) The numerical suffix to the soil type indicates the compaction level of the soil as a percentage of maximum dry density determined in accordance with AASHTO T-99.

Source: From *Design Method for Flexible Pipe,* AASHTO, 1998, with permission.

www.EngineeringEBooksPdf.com

LRFD Bridge Design Specifications. If the full soil prism is used, the profile stability check can be conservatively ignored.

The total load (pressure) is then calculated as follows: The design is calculated by multiplying the dead load by a β factor of 1.5 and the live load by a factor of 1.67. The summation of the dead load and live load is then multiplied by a γ factor of 1.3.

Structural Design of Plastic Pipe. Calculations proceed as follows. The thrust in the pipe wall is

$$T_L = P_L\left(\frac{S}{2}\right) \tag{5.49}$$

where T_L = factored thrust, lb/ft
P_L = factored load pressure, lb/ft^2
S = pipe diameter or span, in

The required wall area to resist the thrust is

$$A = \frac{T_L}{\phi f_u} \tag{5.50}$$

where A = required wall area, in^2/ft
f_u = minimum tensile strength, lb/in^2
ϕ = capacity modification factor, 1.0

Next, check for possible wall buckling. The critical buckling pressure must be greater than the factored design load pressure. The critical buckling pressure (lb/in^2 or kPa) is given by the following equation:

$$P_{cr} = 1.999\sqrt{\frac{M_s EI}{R^3(1 - v^2)}} \tag{5.51}$$

where M_s = constrained soil modulus, lb/in^2 (see Table 5.24)
R = radius to centroid of pipe, in
E = modulus of elasticity, lb/in^2
I = moment of inertia of pipe profile, in^4/in
v = Poisson ratio, 0.4

Thermoplastic materials must also be checked to ensure that total wall strains do not exceed the resistance capabilities of the plastic. The pipe wall must resist the combined action of bending and thrust. Compressive strain is the critical strain since wall thrust acts purely in compression and will tend to decrease the tensile strain in the wall. Maximum permissible strain values are given in Table 5.23. The bending strain in the wall can be calculated as

$$\varepsilon_b = \frac{2D_f y_{max}\Delta}{\phi R^2} \tag{5.52}$$

where D_f = pipe shape factor (see Table 5.25)
R = radius to centroid of pipe, in
y_{max} = distance from centroid of pipe wall to furthest pipe surface, in
Δ = vertical deflection, in
ϕ = capacity modification factor, 0.5

www.EngineeringEBooksPdf.com

TABLE 5.25 Shape Factors for Design of Plastic Pipe

Pipe stiffness (PS), lb/in^2 (kPa)	Gravel: GW, GP, GW-GC, GW-GM, GP-GC, and GP-GM		Sand: SW, SP, SM, SC, GM, GC, or mixtures	
	Dumped to slight (<85% SPD)	Moderate to high (≥85% SPD)	Dumped to slight (<85% SPD)	Moderate to high (≥85% SPD)
17 (117)	4.6	5.7	5.1	6.7
20 (138)	4.4	5.4	4.9	6.4
22 (152)	4.3	5.3	4.8	6.3
28 (193)	4.1	4.9	4.4	5.9
34 (234)	3.9	4.6	4.1	5.6
35 (241)	3.8	4.6	4.1	5.6
38 (262)	3.8	4.5	4.0	5.4
40 (276)	3.7	4.4	3.9	5.4
42 (290)	3.7	4.4	3.9	5.3
50 (345)	3.6	4.2	3.8	5.1

Notes: (1) Interpolate for intermediate pipe stiffness values. (2) For Class IA and IB backfill materials, use the appropriate "Gravel" column. (3) For Class IVA backfill material, use the highest shape factor for that pipe stiffness. (4) Information has been modified from ANSI/AWWA C950-88, p. 28, for pipe stiffnesses appropriate for corrugated polyethylene pipe. (5) SPD = specified minimum density.

Source: From *Structural Design Method for Corrugated Polyethylene Pipe,* Corrugated Polyethylene Pipe Association, 2000, with permission.

and the compressive hoop, or circumferential, strain is

$$\varepsilon_h = \frac{P_L R}{12AE} \tag{5.53}$$

where all variables are as described above.

The total compressive wall strain, ε, is determined by adding the bending strain and hoop strain:

$$\varepsilon = \varepsilon_b + \varepsilon_h \tag{5.54}$$

The equation for determining the bending strain includes the pipe vertical deflection as a design input parameter. Traditionally, the modified Iowa equation has been used to estimate expected pipe deflections. However, differences between calculated and field measured values as great as 100 percent have been reported. This is not a criticism of the equation. It certainly has applicability for small deflection pipe products such as concrete or corrugated metal. Further, with all of the technological advancements in computer modeling, to date no better equation or method has been developed.

In lieu of calculating the expected pipe deflection via the modified Iowa equation, the designer may set a maximum permissible in-field deflection limit in the project specifications. This deflection value can then be used in the design calculations without worry about the accuracy of the computed value.

www.EngineeringEBooksPdf.com

Example: Thermoplastic Pipe Design. A 42-in-diameter (1050 mm) culvert is required for a site with 6 ft (1.83 m) of cover and an HS 20 live load. The pipe will be installed with a well-graded gravel backfill compacted to 95 percent of Proctor density. The maximum in-field deflection will be 5 percent. The pipe is an HDPE pipe with the following material properties:

D_i = inside pipe diameter, 41.85 in (1063 mm)

A = pipe wall area, 6.420 in^2/ft (13.6 mm^2/mm)

I = moment of inertia, 0.621 in^4/in (10,176 mm^4/mm)

c = distance to the centroid of the pipe wall, 1.38 in (35.0 mm)

E = modulus of elasticity, 110,000 lb/in^2 (758 MPa)

f_u = minimum tensile strength, 900 lb/in^2 (6.21 MPa)

First, calculate the design load pressure as follows:

$$P_L = \gamma(\beta_E P_{EL} + \beta_E P_{LL+I})$$

$$= 1.3\,(1.5 \times 771.6 + 1.67 \times 200)$$

$$= 1938.8 \text{ lb/ft}^2 \text{ (92.8 kPa)}$$

Then, from Eq. (5.49), the factored thrust in the pipe wall is

$$T_L = P_L\left(\frac{S}{2}\right)$$

$$= 1938.8\left(\frac{3.5}{2}\right)$$

$$= 3392.9 \text{ lb/ft (49.5 kN/m)}$$

From Eq. (5.50), the required wall area to resist the thrust is

$$A = \frac{T_L}{\phi f_y}$$

$$= \frac{3392.9}{1.0(3000)}$$

$$= 1.13 \text{ in}^2\text{/ft (2.39 mm}^2\text{/mm)}$$

www.EngineeringEBooksPdf.com

Next check the critical buckling stress with Eq. (5.51):

$$P_{cr} = 1.999\sqrt{\frac{M_s EI}{R^3(1 - \nu^2)}}$$

The constrained soil modulus can be read from Table 5.24. In design, it is customary to assume the design compaction level is 5 percent less than that required in the installation specifications. Therefore assume 90 percent compactive effort for the design. The soil stress level is the unfactored earth load pressure, 771.6 lb/ft^2 (37.0 kPa). Enter the table with this soil pressure and an Sn-90 material. The constrained soil modulus is 1500 lb/in^2 (10.3 MPa); thus,

$$P_{cr} = 1.999\sqrt{\frac{1500(110{,}000)(0.621)}{[(41.85/2) + 1.38]^3(1 - 0.4^2)}}$$

$$= 207 \text{ lb/in}^2 \text{ (1.43 MPa)}$$

The factored design load pressure is 1938.8 lb/ft^2 (92.8 kPa) or 13.5 lb/in^2, which is less than the critical buckling pressure.

Determine the bending strain from Eq. (5.52):

$$\varepsilon_b = \frac{2D_f y_{max}\Delta}{\phi R^2}$$

$$= \frac{2(4.4)(1.72)(.05)(41.85)}{1.0[(41.85/2) + 1.38]^3}$$

$$= 0.285 \text{ percent}$$

and determine the hoop compressive strain from Eq. (5.53):

$$\varepsilon_h = \frac{P_L R}{12AE}$$

$$= \frac{1938.8(41.85 + 1.38)}{12(6.42)(110{,}000)}$$

$$= 0.990 \text{ percent}$$

The total compressive wall strain is 0.285 percent + 0.990 percent = 1.275 percent. This is less than the permissible 5 percent for HDPE, and therefore the design is acceptable.

5.8.6 Pipe Deflection by the Iowa Formula

Deflection of flexible pipes is not a design criterion in most specifications, because if pipes are properly installed with approved soil and compaction level, deflections will be within normal limits. However, the deflection for given loading and backfill conditions

www.EngineeringEBooksPdf.com

TABLE 5.26 Values of Bedding Constant K for Deflection Calculations for Flexible Pipe

Bedding angle, °	K
0	0.110
30	0.108
45	0.105
60	0.102
90	0.096
120	0.090
180	0.083

Source: From A. P. Moser, *Buried Pipe Design,* McGraw-Hill, 2001, with permission.

can be approximated for a round pipe. The traditional method of predicting deflection is the Iowa formula introduced by M. G. Spangler and modified by R. K. Watkins:

$$\Delta X = \frac{D_L K W_c r^3}{EI + 0.061E'r^3} \tag{5.55}$$

where ΔX = total horizontal deflection, in (mm)
D_L = deflection lag factor
K = bedding constant
W_c = vertical load on pipe, lb/in (kN/mm)
r = mean radius of pipe, in (mm)
E = modulus of elasticity of pipe material, lb/in^2 (MPa)
I = moment of inertia of pipe wall, in^4/in (mm^4/mm)
E' = modulus of soil reaction, lb/in^2 (MPa)

Values for the bedding constant may be found in Table 5.26. Because the bedding constant does not vary greatly and the bedding angle is generally not well known, it is often taken as 0.10. Values of the modulus of soil reaction are given in Table 5.27. As used in this table, the bedding material refers to the soil surrounding the pipe, not just the bedding layer on which the pipe rests. The deflection lag factor accounts for the tendency for deflections to increase over time, particularly if the soil is not well compacted or if the soil has a significant plastic content. The value of D_L used ranges from 1.0 to 1.5. Generally, reverse curvature of a round flexible pipe occurs when the deflection reaches approximately 20 percent. Traditionally, a factor of safety of 4 is used, so deflections are limited to 5 percent.

5.8.7 Tunnel Liner Plates and Rib and Lagging

Steel tunnel liner plate and steel rib and lagging are flexible structures placed by a tunneling operation. Like other flexible structures, they are designed to deflect vertically under load so that the lateral side pressure will be established and essentially uniform radial pressure will develop about the perimeter of the structure. Because these structures are used in tunneling operations, however, under most circumstances it is not necessary to design for the complete prism load. The AASHTO *Standard*

www.EngineeringEBooksPdf.com

TABLE 5.27 Average Values of Modulus of Soil Reaction E' for Deflection Calculations for Flexible Pipe

Soil type—pipe bedding material (Unified Classification System)*	E' for degree of compaction of bedding, lb/in^2			
	Dumped	Slight, <85% Proctor, <40% relative density	Moderate, 85–95% Proctor, 40–70% relative density	High, >95% Proctor, >70% relative density
Fine-grained soils (LL>50)† Soils with medium to high plasticity CH, MH, CH-MH	No data available; consult a competent soils engineer; otherwise use $E' = 0$			
Fine-grained soils (LL<50) Soils with medium to no plasticity CL, ML, ML-CL, with less than 25% coarse-grained particles	50	200	400	1000
Fine-grained soils (LL<50) Soils with medium to no plasticity CL, ML, ML-CL, with more than 25% coarse-grained particles Coarse-grained soils with fines GM, GC, SM, SC contains more than 12% fines	100	400	1000	2000
Coarse-grained soils with little or no fines GW, GP, SW, SP‡ contains less than 12% fines	200	1000	2000	3000
Crushed rock	1000	3000	3000	3000
Accuracy in terms of percentage deflections§	±2	±2	±1	±0.5

Conversion: 1 lb/in^2 = 6.895×10^{-3} MPa.

Note: Values applicable only for fills less than 50 ft (15 m). Table does not include any safety factor. For use in predicting initial deflections only; appropriate deflection lag factor must be applied for long-term deflections. If bedding falls on the borderline between two compaction categories, select lower E' value or average the two values. Percentage Proctor based on laboratory maximum dry density from test standards using about 12,500 ft · lb/ft^3 (598,000 J/m^3) (ASTM D698, AASHTO T-99, USBR Designation E-11). 1 lb/in^2 = 6.9 kN/m^2.

*ASTM designation D2487, USBR designation E-3.

†LL = liquid limit.

‡Or any borderline soil beginning with one of these symbols (i.e., GM-GC, GC-SC).

§For ±1% accuracy and predicted deflection of 3%, actual deflection would be between 2% and 4%.

Source: From American Society of Civil Engineers, *J. Geotech. Eng. Div.,* January 1977, pp. 33–43, with permission. (Based on Amster K. Howard, "Soil Reaction for Buried Flexible Pipe," U.S. Bureau of Reclamation, Denver, Colo.)

www.EngineeringEBooksPdf.com

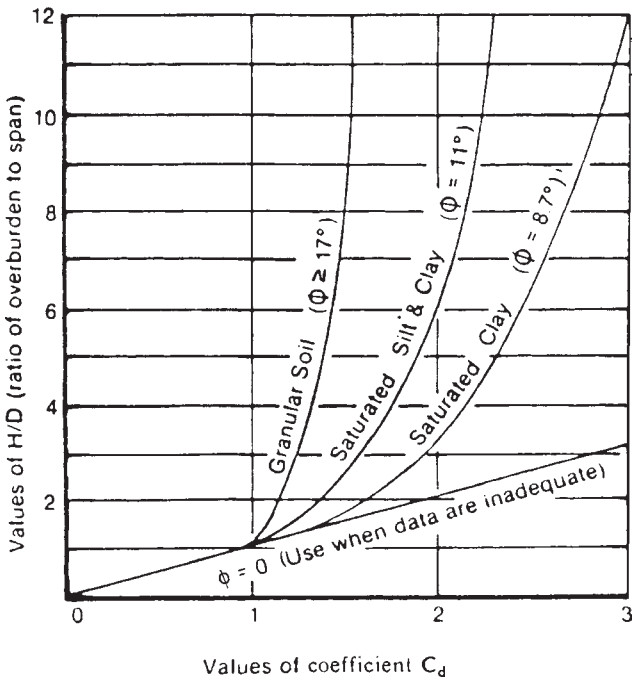

FIGURE 5.41 Diagram for coefficient C_d for load calculations for tunnels. ϕ is soil friction angle. (*From* Standard Specifications for Highway Bridges, *American Association of State Highway and Transportation Officials, Washington, D.C., 2004, with permission*)

Specifications for Highway Bridges state that the earth pressure on a tunnel liner can be determined from the following equation:

$$W_E = C_{dt}\gamma S \tag{5.56}$$

where W_E = earth pressure at the crown, kip/ft^2
C_{dt} = load coefficient for tunneling (from Fig. 5.41)
γ = unit weight of soil, kip/ft^3
S = tunnel diameter or span, ft

The tunnel liners act in compression caused by ring thrust. If a structural member with significant stiffness is used, the effects of ring flexure must be included because the flexural stress may reduce the capacity of the member to carry load.

The design of tunnel liners generally consists of designing the liner for joint strength, wall buckling, and minimum stiffness for installation. The analysis of steel ribs with lagging is a fairly straightforward procedure. The steel ribs are generally placed at 4-ft (1.2-m) intervals on centers. The lagging must carry the load between these and is designed for moment and shear over the 4-ft (1.2-m) span. The load per linear foot may be taken as that for tunnel liner plate. The ribs must be designed to withstand the load transferred from the lagging. The stress in the steel ribs should include the effects of both flexure and thrust. The use of precast concrete tunnel liners as an initial support is

www.EngineeringEBooksPdf.com

rare. The analysis is complex, but may be aided by the use of moment-thrust interaction diagrams. (See *Standard Specifications for Highway Bridges,* AASHTO; R. V. Proctor and T. L. White, *Earth Tunneling with Steel Supports,* Commercial Shearing, Inc., 1977; and T. D. O'Rourke, *Guidelines for Tunneling Design,* ASCE, 1984.)

5.9 REPLACEMENTS FOR BRIDGES

5.9.1 Introduction

America's transportation infrastructure—particularly the Interstate Highway System—is past its original anticipated design life and its age is showing. The age of the system coupled with high user demand and limited financial resources requires innovative thinking from the design engineer. One solution frequently utilized is the replacement of deficient bridges with prefabricated structures. The prefabricated alternative is typically less expensive to construct, easier to maintain, and can be built with significantly less service disruption to the traveling public.

This approach can be utilized for stream crossings and for grade separation structures. The systematic approach for selecting an appropriate structure is similar for both applications. The designer must determine an appropriately sized structure; determine if any of the existing structure will be reused; determine how much of the structure will remain in place; assess the constructability of the proposed replacement structure; and determine the structural capacity of the proposed structure.

5.9.2 Shapes and Materials

Almost any size and shape of culvert can be utilized for the replacement of an existing bridge. However, reinforced concrete three- and four-sided box culverts, special shape reinforced concrete structures, metal box culverts, and long-span corrugated metal structures are particularly suited for this application. This is because they tend to have larger open-end areas with lower rises. General details on these structure types are given in Art. 5.6 and the structural design of these structures is given in Art. 5.8. Figures 5.42 and 5.43 show examples of reinforced concrete arches and a long-span corrugated steel culvert being used as bridge replacement structures.

(a) (b)

FIGURE 5.42 Two examples of reinforced concrete arch structures being used as bridge replacements. (*Photographs with permission of Contech Bridge Solutions, Inc.*)

www.EngineeringEBooksPdf.com

FIGURE 5.43 Corrugated steel culvert being used as a railroad overpass. (*Photograph with permission of Viacon, Polska*)

5.9.3 Design Considerations

For a waterway crossing, the designer must consider the backwater elevation and flow velocity for both the proposed and existing structures. It is recommended that the same hydraulic model be utilized for both the existing and proposed structure. Any increase in backwater elevation or stream velocity must be thoroughly analyzed and the upstream and downstream effects considered. For a grade separation structure the designer must consider both horizontal and vertical clearances. The shape of the replacement structure must be considered when determining the minimum clearances.

It is imperative that an accurate and complete survey of the existing structure be conducted. This will aid the designer in determining the maximum prefabricated structure size that can be installed at a particular site.

In certain situations it may be possible to reuse portions of the existing structure in the design of the replacement structure. The most obvious example is reuse of the existing foundation. If the foundation type is known (i.e., concrete spread footer, concrete on piling, etc.) standard geotechnical engineering calculations for assessing the suitability of the foundation must be completed. The designer is cautioned against using existing unknown foundation types.

One of the primary benefits of utilizing a prefabricated culvert as a bridge replacement is that much of the existing structure can remain in place. This reduces construction time and reduces the work limits required for the structure installation. For single-span structures with vertical wall–type abutments, it is typical to leave the existing abutments in place. It may also be possible to leave the deck in place. For multiple-span structures, existing abutments, piers, foundations, and deck may all be left in place depending on site constraints. The required size of the replacement structure, along with site access will typically control how much of the existing structure can be left in place.

www.EngineeringEBooksPdf.com

Another consideration for the designer is the void space between the existing and proposed structure. If there is insufficient void space to properly place, compact, and test soil backfill, the use of flowable fill is common. Where flowable fill is utilized, it is recommended that the proposed structure size be maximized. This is because the cost of the additional structure size is typically far less expensive then the cost of the flowable fill.

Lastly the designer must determine the structural capacity of the replacement structure and the existing structure. If the two structures are very close or if the existing deck is left in place, then the composite strength of the two may be considered. The finite element method is well suited for this complex analysis. In the absence of sophisticated computer methods, the designer can conservatively ignore the contribution of the existing structure. However, typical design assumptions regarding surrounding soil support must be verified prior to the use of the closed form design methodologies presented in Art. 5.8. The designer must also consider external grouting pressures when flowable fill is used as the backfill material.

5.10 CONSTRUCTION METHODS

Underground structures may be built by a variety of means including embankment construction, open-trench construction, jacking, tunneling, and microtunneling.

The proper design and installation of the foundation, bedding, and backfill for embankment and trench installations are critical to the performance of underground structures. They are also essential factors for achieving an accurate structural analysis of the system. The foundation preparation, bedding, and backfill of underground structures should be done in accordance with standards established by local and state transportation agencies. These standards vary from region to region, but the important aspects of typical practices are reviewed below.

Regardless of whether the pipe is installed in an embankment or a trench, the foundation must provide relatively uniform resistance to loads. If rock is encountered, it should be excavated and replaced with soil. If soft material is encountered, it should be removed for a width of three pipe spans and replaced with suitable material. Care must be taken to ensure that the foundation under the pipe is not stiffer than the adjacent zones, because this will attract additional load on the pipe.

The bedding is then placed above the foundation. Bedding thickness and material is contingent upon the type of pipe and the quality of the installation required. Pipe-arch structures require excellent soil support at the corners, because pressures are higher there. For most applications 3 to 6 in (75 to 150 mm) of bedding is sufficient. Some agencies require a shaped bedding for all pipe because of the difficulties in compacting the backfill in the haunch area. More recently, for most round pipes, in lieu of a shaped bedding, specifications call for the bedding under the middle one-third of the pipe diameter to be left uncompacted. This is so that the pipe can properly seat itself in the bedding, resulting in a greater length of support along the bottom circumference of the pipe. Pipe arches and large span structures should always be placed on a shaped bedding.

The backfill should be placed in 6- to 8-in (150- to 200-mm) compacted layers around the structure. Each backfill layer must be compacted to the minimum density required in the construction specifications. Densities less than 90 percent standard Proctor density should not be permitted. The backfill must be kept in balance on each side of the pipe. A granular material free of organic content and with little or no plasticity makes good backfill.

Complete installation requirements for the various pipe materials can be found in AASHTO, ASTM, and state DOT specifications.

www.EngineeringEBooksPdf.com

5.10.1 Embankment Construction

Where a pipe is required as part of an embankment construction, it may be installed by compacting layers of fill uniformly on either side. It is important to bring the layers up uniformly on either side of the pipe. After a sufficient layer is compacted over the top of the pipe, ordinary embankment construction may proceed. Alternatively, some agencies require that the embankment be constructed first, then a trench dug for the installation of the pipe.

5.10.2 Trench Construction

The open-trench method is commonly used for culvert construction. It is more cost-effective than tunneling except when a pipe must be constructed in an existing high fill. Shoring may be necessary, particularly if the installation is under a traveled way. This will keep the limits of excavation to a minimum and, by the use of steel cover plates, allow the roadway to remain open during nonworking hours. Where it is necessary to use an open-trench method of construction in urban areas, it is wise for the designer to make available to the contractor options for the type of structure to be placed. For example, if a box culvert is deemed necessary by the engineer because of hydraulic considerations and physical constraints, a precast concrete or a prefabricated metal box, as alternatives to cast-in-place construction, should be permitted. In this manner, the traveling public experiences a minimum of disruption of service when open-trench construction is used. AASHTO recommends a trench width equal to 1.25 times the outside diameter of the pipe plus 1 ft (300 mm) for concrete pipe and a width to provide for 2 ft (600 mm) minimum on each side of the pipe for flexible culverts. However, some states simply recommend a constant clearance between the outside of the pipe and the trench wall to ensure that there is room for compaction and compaction-testing equipment.

5.10.3 Camber Requirements

Where high embankments are placed on original ground, the fill may compress and consolidate the foundation soil. Thus, culverts constructed on or near the original ground surface tend to undergo some settlement. The amount of settlement varies with fill height and the consolidation characteristics of the foundation soil. Because the amount of settlement varies with the fill height, the culvert will tend to settle more toward the center than at the ends. If the culvert is built upon a straight grade between the inlet and outlet elevations, a sag will develop. The sag may create a low point in the culvert, or may cause accumulation of debris and silt and opening and leaking of joints. These in turn may lead to a reduced waterway capacity and the possibility of loss of stability to the embankment through piping of fines at the joint. As illustrated in Fig. 5.44, these dangers may be avoided by cambering the culvert so that after settlement occurs, the culvert grade line will be at or close to that desired. Almost any type of culvert that is not cast in place may be cambered. These include precast concrete pipes and box culverts, corrugated metal pipes, structural-plate steel or aluminum pipes, and plastic pipes. The amount of camber required can be determined by a soils engineer.

5.10.4 Jacking and Tunneling

Should open-trench construction prove uneconomical or the disruption to the traveling public too great, either jacking or tunneling may prove to be more efficient. Either

www.EngineeringEBooksPdf.com

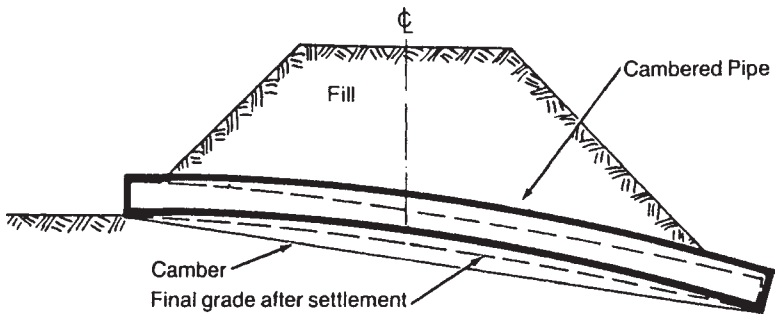

FIGURE 5.44 Illustration of camber to allow for settlement of culvert under high fill. (*From* Handbook of Steel Drainage and Highway Construction Products, *American Iron and Steel Institute, 1994, with permission*)

method removes from consideration the possible disruption of traffic. In addition, for deep fills, these methods can be economically competitive with the open-trench method. The designer should be cautioned that when jacking or tunneling is used, small differences in anticipated geologic conditions may lead to large changes in the method by which the contractor solves the problem. For example, the difference between "running" and "flowing" ground can be not only very costly, but disastrous as well. If unanticipated geologic conditions are encountered by the tunneling or jacking contractor, the cost of the contract could increase dramatically. For this reason, if geologic conditions are in doubt, the designer is advised to obtain adequate geotechnical information through borings.

Jacking. Jacking of underground structures requires that the structure being jacked be able to withstand the large compressive forces acting on it. This generally limits the possibilities to reinforced concrete pipe, reinforced concrete boxes, and solid wall steel pipes. The first step is to adequately provide for a jacking pit, or to design a thrust wall if the jacking is to take place above ground. The jacking force and the adequacy of the structure itself to withstand that force are often left to the contractor. The jacking force required is dependent upon the type and diameter or span of the structure, the type of soil, the amount of overfill, and the jacking distance. Table 5.28 provides values of frictional resistance on reinforced concrete pipe determined from past jacking projects. These values may be reduced if a lubricant such as bentonite slurry is injected into the void created by the overcut. If the frictional resistance is too high for the thrust blocks or the jacks, intermediate jacking stations may be necessary.

TABLE 5.28 Frictional Resistance of Reinforced Concrete Pipe for Jacking Projects

Soil condition	Frictional resistance, lb/ft^2	Frictional resistance, kN/m^2
Rock	40–60	2–3
Firm clay, silt	100–400	5–20
Wet sand	200–300	10–15
Dry loose sand	500–900	24–45

Source: From S. J. Klein, "Geotechnical Aspects of Pipe Jacking Projects," *Pipeline Crossing Proceedings,* Special Conference, Pipeline Division, American Society of Civil Engineers, Denver, March 25–27, 1991, with permission.

www.EngineeringEBooksPdf.com

Tunneling. Tunneling through soft ground is accomplished by pushing a shield forward and erecting a liner inside of it. The shield is then pushed off the liner as the tunneling progresses, so that there is no limit to the length that may be tunneled. The initial liner may consist of precast concrete sections, steel tunnel liner plates, or steel ribs with either wood or steel lagging. After the liner is erected within the shield and the shield is jacked forward, the void created between the liner and the ground due to overcut may or may not need to be grouted. The grouting of this area depends upon the judgment of the engineer and the type of liner. Tunnel liner plates may not be expanded once they are erected. Because of this, the void caused by the overcut is generally grouted. Precast concrete sections and steel ribs may be expanded to contact the earth once the shield is jacked forward. In this case it is left to the judgment of the engineer whether or not grouting is necessary. After the tunnel is completed, the carrier pipe is placed inside the liner and the void between the two is generally filled with either sand or grout.

Microtunneling. Microtunneling is a term used to describe a method of horizontally boring pipes approximately 36 in (900 mm) in diameter and smaller, using highly sophisticated remotely controlled equipment. The use of lasers allows for extremely accurate placement of the pipe in both grade and alignment. The pipe is jacked from a jacking pit as the tunnel is being bored and the spoils are removed.

Directional Drilling. Directional drilling is similar to microtunneling except that where microtunneling is a one-stage process, the directional drilling method consists of first drilling a pilot hole, reaming it to the proper diameter, and then pulling the pipe through. Because of this methodology, no jacking pit is required. This method has a high degree of precision in location of grade and may be used where the pipe diameter is 42 in (1050 mm) or smaller and the length to be placed is less then 5000 ft (1.5 km).

Stabilization Methods for Tunneling. As previously stated, tunneling may be required where it is necessary to keep a roadway or rail line open. This may occur where there is little fill over the crown of the excavation, or where there is adequate fill but it is lacking in stiffness or cohesive strength. When this happens, the soil above the excavation cannot, by itself, develop an arching effect that will adequately support the roadway. This situation necessitates unusual solutions such as chemical grouting, compaction grouting, ground freezing, and the use of spiles. The applicable method of increasing the support depends upon the site and soil conditions. Chemical grouting, compaction grouting, and ground freezing are all methods of stabilizing the soil. Spiles are horizontally drilled small-diameter holes extending from one side of the proposed tunnel to the other and surrounding the tunnel, generally in an arch shape. The holes, after being drilled, have a steel pipe placed in them, which is subsequently filled with concrete. The spile diameter is commensurate with the size of opening to be excavated, and the spacing is reliant upon the amount of coverage and cohesiveness of the soil. After the spiles are in place, the tunnel excavation may begin with steel arch supports placed as necessary.

5.11 INSPECTION

Many storm drains and highway culvert systems have in the past been and are presently designed for a 50-year life span. The local roadway and state highway and interstate systems have in large part reached this age or soon will. Consequently, rehabilitation and repair of existing storm sewers and highway drainage culverts are presently requiring more and more attention and resources from the responsible agencies. It is generally less expensive to rehabilitate or repair an existing underground structure than to replace it. In addition, the cost of repair to the facility after a catastrophic failure

www.EngineeringEBooksPdf.com

greatly exceeds the cost of rehabilitating the structure and preventing that failure. The key, of course, is being able to identify those structures that are in jeopardy of failing.

5.11.1 General Considerations

Failure of a culvert can be defined as any condition that could reasonably lead to the collapse of the roadway above or the inability of the culvert to carry the design flow. Failure of the roadway above may be a direct result of the collapse of the structure, or may be caused by a loss of the fill due to piping and the infiltration of fines. Excessive seepage through open joints can cause loss of the backfill material as illustrated in Fig. 5.45.

Fortunately, the complete collapse of a culvert is a rare occurrence. Culverts that are overstressed, either because of loss of the surrounding soil support or because of overloads, tend to redistribute those stresses in many cases. For example, the loss of support or the effect of excessive live loads may not occur over the complete length of the structure. Consequently, as one section becomes overstressed, it may deflect more than the adjacent sections and transfer loads to those stiffer sections. In addition, underground structures that show distress, such as a concrete pipe that cracks excessively or a flexible pipe that deflects excessively, may reduce the loads upon themselves by the very act of deflecting. For instance, flexible pipe that overdeflects may have a reduced overburden load on it because the complete prism of earth above the structure may not necessarily move downward with the deflection; competent soils will have a tendency to arch over the pipe and support some of the load. The concrete pipe that cracks may form hinges and redistribute loads within the structure; the concrete pipe may now have more of a tendency to act as a flexible structure with reduced moments and increased compression forces. However, this discussion should not give the false impression that structural distress can be ignored. Catastrophic failures have occurred and caused fatalities when vehicles plunged into the void left by the collapse. Large structures with low covers are probably the most susceptible to structural failures and should be evaluated carefully.

Even if complete collapse does not occur, structural distress can affect the adjacent soil and accelerate failure. Piping and infiltration that cause loss of adjacent soil support may proceed at an increasing rate and cause failure of the roadway above. In some cases, enough fill may be lost through piping to create a sinkhole with the structure below showing no signs of severe structural distress.

The National Bridge Inspection Program requires that all structures with span greater than 20 ft (6 m) be inspected every 2 years. That is, all structures with spans

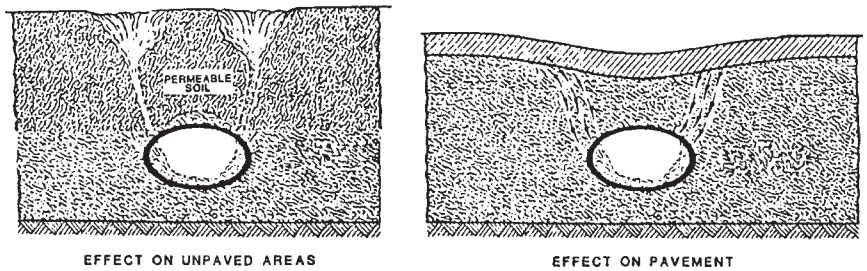

FIGURE 5.45 Schematic of surface indications of infiltration. (*From "Culvert Inspection Manual," Report No. FHWA-IP-86-2, FHWA, 1986, with permission*)

www.EngineeringEBooksPdf.com

greater than 20 ft (6000 mm) when measured along the centerline of the roadway are classified as bridges for purposes of inspection. Two important points should be mentioned here. First, the measured distance is along the centerline of the roadway. That means a structural-plate pipe or a reinforced concrete box culvert with a 15-ft (4500-mm) span on a 42° skew will be classified as a bridge for inspection purposes and included in the bridge inspection program, even though the span is 15 ft (4500 mm) for hydraulic and structural design purposes. The second point is that multiple pipes are considered to be a bridge for inspection purposes when the out-to-out distance between the first and last pipes is 20 ft (6000 mm) or greater and there is a maximum of one-half diameter of the smaller pipe between them. For example, two 102-in-diameter (2550-mm) pipes separated by 51 in (1290 mm) would qualify as a bridge (102 + 51 + 102 = 255 in, or 21.25 ft, or 6375 mm).

Culverts that do not qualify for inspection under the bridge program should nevertheless be given consideration for inclusion in a regular inspection program. To avoid repetition of inspections, some coordination between the engineers responsible for the two programs is necessary. Although the ideal would be to inspect all culverts, obvious constraints, with regard to both physically inspecting the culverts and the costs of doing so, place limits on any program of culvert inspection. It may be less expensive to replace small culverts that are located beneath lightly traveled roads and have little fill on them than it would be to maintain them in an inspection program with rehabilitation prior to failure as a goal. Conversely, where some culverts may not warrant inspections absent obvious signs of distress, others may require frequent inspections. Large structures that carry high flows during major storms or have a history of structural deficiencies, such as cracking (in concrete) or corrosion (in metal), should be inspected more frequently and especially after periods of storms.

5.11.2 Elements of Inspection

An inspection of the culvert should include the approach roadway, the embankment, the headwalls and wingwalls, the waterway, and the culvert barrel.

Roadway. The roadway over the culvert should be inspected for sags and cracks in the pavement that are the result of settlement. These may be evident in both the roadway itself and adjacent guiderail. The settlement may be the result of poorly compacted material adjacent to the culvert piping (infiltration or transportation of fines by water flowing through the backfill), or settlement of the culvert itself. The structural integrity of the culvert itself may or may not have been compromised. An inspection of the culvert must be made.

Embankment, Headwalls, and Wingwalls. The embankment, headwalls, and wingwalls at the inlet and outlet ends of the culvert should be inspected for signs of erosion, undermining, and settlement. If there is erosion at the ends, the structural integrity of the culvert will not necessarily be immediately compromised, but the hydraulic capacity will be affected. Any erosion or undermining will only worsen, and corrective action should be scheduled. If there is separation between the culvert and the endwalls, there could be a loss of supporting soil somewhere along the length of the culvert, which would affect structural capacity.

Waterway. The waterway should be inspected directly upstream and downstream for changes in the drainage. The culvert may have effected the changes in this drainage, and conversely, the changes in the drainage may have an effect on the culvert. An example of the former is where the velocity of the water is increased because of the

www.EngineeringEBooksPdf.com

channeling effect of the culvert. This velocity change could then cause either scour or accretion downstream. An example of the latter is accretion affecting the backwater up to the culvert, which can alter the subsequent performance of the culvert. In addition, the waterway should be inspected for accumulations of debris and sediment at both the inlet and the outlet and within the culvert itself.

Culvert Barrel. The barrel or structure of the culvert should be inspected for defects, distortions, and deflections. The nature of these will depend upon the type of culvert being inspected.

5.11.3 Inspection of Flexible Structures

A flexible structure should be checked to ensure that the cross-sectional shape it was designed for is intact. If the flexible culvert, whether it is a round pipe, a pipe arch, an arch, a horizontal ellipse, or any other structural shape, deflects from its design shape, it is not receiving the required support from the backfill. It is assumed in the design of flexible structures that moment in the structure is negligible and that due to the thrust forces, the structure is in compression throughout. If the deflection is large enough to cause a flattening of the structure, these assumptions will not hold true and the structure may collapse. Larger structures with large top radii, such as long-span structures, can withstand a smaller percentage of deflection before reverse curvature occurs than can round structures.

Visual observations of the culvert shape may reveal only large distortions and deflections; deformations may not be readily apparent until they reach approximately 10 percent. For this reason, if excessive deflections in the cross-sectional shape are suspected, physical measurements should be taken and documented with changes over time. Reference points should be permanently marked, and for a corrugated structure, measurements should be taken to inside corrugations for consistency. General deflections of round pipe greater than 5 percent should be investigated and monitored; reversal of curvature is expected at 20 percent for a metal culvert, but it may occur at a lesser value for a large structure. Localized flat spots or reversals of curvature are matters of special concern. It is necessary to determine, over time, if the structure deflection has stabilized. This information is critical in determining how serious the deflection is, if rehabilitation is necessary, and in determining if the rehabilitiation method needs to offer additional structural support to the culvert. A computer program is available to aid in the investigation and evaluation of multiple-radius metal structures. (See D. C. Cowherd et al., "Application of the Program MULTSPAN/SOILEVAL to Analyze Problem Structures," *Proceedings of the Second Conference on Structural Performance of Pipes,* Ohio University, Athens, Ohio, 1993, A. A. Balkema, Rotterdam, 1993.)

All metal culverts should be investigated for evidence of corrosion and erosion. With a general loss of section there will be an accompanying loss of structural capacity. Wear will first be noted by a loss of the galvanized or other coating. If this occurs, then the unprotected metal may be expected to deteriorate more rapidly because of the erosive effects of the bedload. Corrugated metal pipe should be checked to ensure joint integrity (see Art. 5.11.4).

Bolted longitudinal seams of structural-plate culverts should be inspected for cocking, cracking, and bolt tipping. Cocking occurs where the structure deflects inward at the seam, causing a significant change in the structure's shape or appearance. This may be caused by improper erection or fabrication of the plates and can result in loss of backfill due to piping and a reduced allowable compression strength of the structure due to the distortion. Cracking may occur where there is excessive deflection at the seam. This could ultimately lead to a disjointing, which would result in loss of ring thrust.

www.EngineeringEBooksPdf.com

Bolt tipping is rare; it occurs where the plates slip because of high compressive forces. However, if the structure is under high fill and the plates slip, the bolt holes could become elongated, with the result that the bolt is eventually pulled through the plate.

Plastic pipe should be inspected for excessive deflection, joint integrity (see Art. 5.11.4), and cracking.

5.11.4 Inspection of Rigid Structures

Inspection of reinforced concrete pipe should focus on problems with alignment, joints, and the wall.

The alignment of the culvert may be inspected visually. Misalignment may be caused either by poor installation practices or by subsequent settling of the pipe or the backfill. In any case, the pipe should be periodically monitored to ensure that the condition does not worsen. Close inspection of the joints may reveal conditions that will lead to an increase in the misalignment of the structure.

Joints should be inspected for cracks, separation, exfiltration, and infiltration. Cracks and separation of joints are detrimental to the culvert only insofar as they increase the possibility of infiltration and exfiltration. Infiltration is the inflow of water and the accompanying fines during times of high groundwater when the flow in the pipe itself is low. If the inspection is made during this time period and infiltration is occurring, it will be evident. If the inspection is made during a period when high groundwater is not present, but infiltration has occurred, there may be evidence of residual fines and silt at the joints. Infiltration can cause the loss of backfill and eventually lead to a failure of the roadway above as shown in Fig. 5.45.

Exfiltration is the outflow of water from the pipe into the surrounding backfill. This may cause piping, a loss of backfill material carried away by the outflowing water. This can create problems both with the roadway above and with the culvert itself, which can lose structural integrity because of the loss of side support. If exfiltration is occurring, it may be observed when the flow is relatively low by inspection of the joints. In addition, there may be some evidence of piping at the outlet end of the culvert, where undermining and the deposition of fines may be present.

Whereas loss of backfill support would be evidenced by excessive deflection in a flexible culvert, rigid culverts will not exhibit this condition. Despite the loss of backfill support, there may be little or no sign of distress in the wall of the culvert.

The walls of concrete pipe should be inspected for longitudinal and transverse cracks and spalls and wearing of the invert. Longitudinal cracks at the pipe crown or invert (cracks that run lengthwise down the culvert) are indicative of high flexural stresses in the pipe. As the pipe is loaded, it tends to deflect downward and outward. These deflections cause the inside of the pipe at the crown and invert to be in tension as well as the outside of the pipe at the springlines. If the pipe is subjected to a high load, longitudinal cracks may develop at these locations. Because the pipe is buried, inspection of the longitudinal cracks located at the springline on the outside of the pipe is not possible. However, the longitudinal cracks at the crown and the invert will be evident if they exist. Cracks 0.01 in (0.25 mm) or less in width are considered to be hairline cracks and are of minor importance. Larger cracks should be noted and monitored.

Longitudinal cracks located between the crown or invert and the springline are usually caused by shear failure of the wall section. If this type of cracking is visually observed, it is imperative that the cause of the cracking be investigated further. If a shear-type failure is determined to be the cause of the cracking, a rehabilitation or replacement strategy needs to be implemented immediately since the load-carrying capacity of the pipe has been compromised.

www.EngineeringEBooksPdf.com

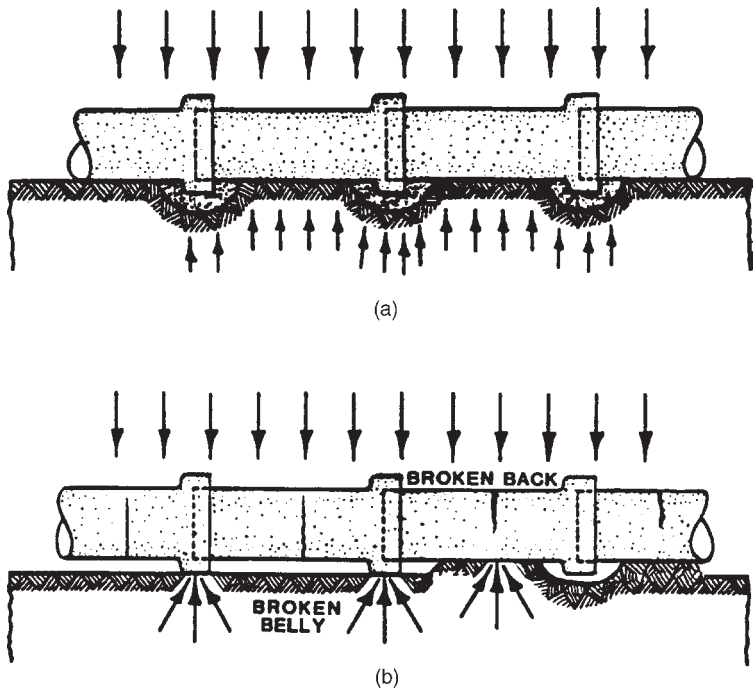

FIGURE 5.46 Illustration of transverse (circumferential) cracking in concrete pipe because of differential settlement. (*a*) Properly prepared bedding evenly distributes loads. (*b*) Improperly prepared bedding results in stress concentrations. (*From "Culvert Inspection Manual," Report No. FHWA-IP-86-2, FHWA, 1986, with permission*)

Transverse cracks (cracks extending around the circumference of the pipe) are caused by differential settlement along the length of the pipe. This can be caused by either unsuitable foundation material or poor installation practices. These cracks are usually not structural in nature but can lead to spalling or subsequent corrosion of the reinforcing steel. Figure 5.46 illustrates transverse cracking resulting from improperly prepared bedding.

Invert wear on a reinforced concrete pipe or box culvert will be indicated by rutting of the surface or rust stains on the surface. In the extreme case, there will be exposed reinforcement. All of these conditions lead to a reduction in the structural adequacy of the culvert. Where the reinforcing is exposed, the bond is broken between it and the concrete and the reinforcing is not able to carry the intended stresses.

Unreinforced concrete pipe, whether cast in place or precast, should be inspected for invert wear and cracking. Because the concrete itself must take the flexural stresses, any reduction in thickness due to abrasive wear is of concern. For that reason, if rutting of the invert is evident, an attempt should be made to determine the amount of loss of section. The culvert should be reanalyzed for its structural capacity using this changed section to determine whether or not rehabilitation or replacement is necessary. If longitudinal cracks are present in unreinforced concrete pipe, the modulus of rupture has been met or exceeded and the flexural capacity of the pipe has been reached. As previously mentioned, only those cracks at the crown and the invert may be easily detected.

(See "Culvert Inspection Manual," Report No. FHWA-IP-86-2, Federal Highway Administration.)

www.EngineeringEBooksPdf.com

5.12 REHABILITATION

The appropriate method to be used for culvert rehabilitation depends upon the type and size of the culvert, its condition, and hydraulic and economic considerations.

Hydraulic and economic considerations bear on the issue of repair versus replacement. If the hydraulic capacity of the culvert is in question, or if a rehabilitation method that would reduce its capacity—either by reducing the waterway or by increasing its roughness—is under consideration, a hydraulic analysis is required. In addition, if there will be additional highway construction in the area or if there are plans to widen the roadway in the future, these considerations should be included in the decision of rehabilitation versus replacement.

Pipe replacement is the only method applicable to all pipe types regardless of defects. It is also the most disruptive to the traveling public if done using an open-trench method of construction. As has been previously discussed, jacking or tunneling, at an increased cost, may eliminate this disruption. The advantage is that the hydraulic capacity may be increased and, at the present time, replacement is comparable in cost to relining. However, other methods of rehabilitation will often suffice, as discussed below.

5.12.1 Rehabilitation of Rigid Structures

Rigid culverts with invert wear may be rehabilitated by paving the lower quadrant of the culvert. Where there is no reduction in the structural capacity of the culvert, the invert may be protected from further erosion by placing portland cement concrete or by using shotcrete. Welded wire mesh may be used to strengthen the culvert where it is necessary to do so. For an unreinforced concrete pipe, this will be the case where there is either significant invert wear or longitudinal cracking. Strengthening of a reinforced concrete pipe may be deemed necessary where there is significant longitudinal cracking, invert wear, or spalling. Dowels should be drilled into the member to be repaired, to provide anchorage for the welded wire fabric.

Cracks and spalls caused by flexural distress may be repaired in rigid culverts by sealing and patching. Spalls may be patched with a mortar- or cement-based material, a procedure that is inexpensive and requires little resource allocation. Cracks may be sealed with either a flexible or a nonflexible sealant. If the crack is continuing to move, and if there will be no loss in the structural capacity of the culvert if it continues to do so (circumferential cracks may be an example), a flexible sealant may be used. If the crack has stabilized, or if additional movement is not acceptable, a nonflexible sealant such as a cement mortar may be appropriate. However, the sealant itself will not prevent additional movement. The underlying cause of the cracking must be discovered and appropriate measures such as pressure grouting applied.

Cracking caused by shear failure of the wall section is a cause for immediate rehabilitative efforts. The replacement or structural relining of the affected pipe will be necessary.

If reinforced concrete pipes separate at the joints and infiltration or exfiltration occurs, not only must the joint be repaired, but the surrounding embankment must be stabilized. The concrete pipe joint may be sealed by the use of an expansion ring gasket and band to prevent further infiltration or exfiltration. Stabilizing the embankment may be accomplished by pressure grouting.

5.12.2 Rehabilitation of Flexible Structures

Flexible metal pipes may need rehabilitation wherever there is a loss of section or where large deflections (greater than 5 percent) are present. Where the culvert has

www.EngineeringEBooksPdf.com

undergone a loss of its structural section due to corrosion or erosion, the amount of loss should be noted and a determination made whether the culvert needs to be strengthened or only protected. The loss of section in metal culverts usually occurs at the invert due to the abrasive conditions of the water flow and/or the corrosive effects of the water. If the loss of section is not significant, it may be adequate to protect the invert with a coating to prevent future erosion or corrosion. The reason for the loss of section should be determined. If the loss is due to corrosion, the application of an asphalt paved invert material should provide protection against future corrosion. However, the asphalt coating does not withstand abrasion well. If the loss is due to erosion, paving the lower quadrant with portland cement concrete will be adequate. Either of these methods is applicable as long as there is no significant loss of structural section that would reduce the structural capacity of the culvert. Where the loss of section is considerable, the structural integrity may be maintained by the addition of welded wire fabric to the concrete paving of the invert. The wire mesh may be welded to the invert corrugations of the metal culvert and then the portland cement concrete placed to provide a smooth channel for the water. Figure 5.47 illustrates rehabilitation with concrete paving. Should the culvert have major structural defects, it may be necessary to replace or reline it or place reinforced concrete around the complete periphery.

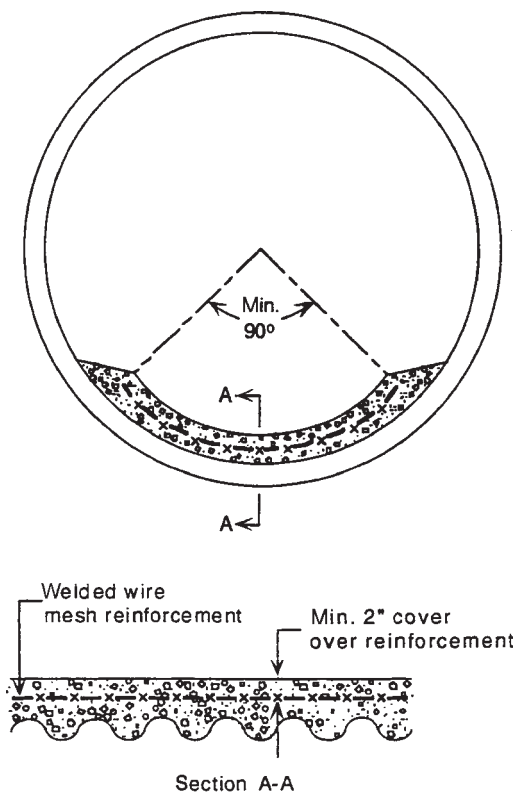

FIGURE 5.47 Example of invert paving of metal culverts with reinforced concrete. (*From* Highway Design Manual, *California Department of Transportation, with permission*)

www.EngineeringEBooksPdf.com

5.12.3 Relining

Relining of either rigid or flexible culverts may be done either by slip lining or by installing a flexible liner. Slip lining is merely the insertion of a prefabricated pipe inside an existing pipe. The most common insertion pipes are either corrugated metal or plastic. Obviously, the cross-sectional area of the pipe will be reduced. This will likely affect the hydraulic capacity of the culvert. If a smooth plastic pipe is utilized, the velocity of the flow may be increased, in part offsetting the reduction in the capacity due to the decreased area. Should this be the case, the downstream end of the culvert should be investigated to prevent additional erosion. Regardless of the type of pipe inserted, the annular space between the inside of the existing pipe and the outside of the inserted pipe should be grouted. The final product is comparable to a new culvert, placed with little disruption to the traveling public.

Another method of relining consists of inserting a flexible tube inside the damaged pipe. The flexible tube will generally consist of a resin liner, which, after being inserted inside the subject pipe, is expanded to fit the full cross-section of the pipe. It spans irregularities such as joints that may have opened. Flexible reline pipes are available in a variety of materials such as HDPE, PVC, and thermal-set resins. They are installed using a variety of methods such as fold and form, and inversion processes. The products are specified and designed on a project-by-project basis. Many of the rehabilitation products can be designed to provide additional structural supprt to the existing pipe. The manufacturer of the material should be consulted as part of the overall design process.

5.12.4 Shotcrete Lining

Welded wire fabric may be used in conjunction with shotcrete to rehabilitate deteriorated portions of either metal or concrete culverts. The welded wire should be anchored to the in-place pipe either through the use of drilled dowels, if the pipe is concrete, or by welding to either the corrugations (of metal pipe) or to previously welded studs. The shotcrete can then be placed by the use of high-pressure hoses. The repair can be designed to restore structural integrity, with little loss of hydraulic capacity.

5.12.5 Grouting Soil Voids

Regardless of the method of repair or rehabilitation chosen, the possible need for grouting potential voids in the soil envelope surrounding the pipe should be addressed. Portland cement grout may be pressure-injected from the interior of the culvert through drilled holes located toward the bottom of the suspected voids. Drilled holes located toward the top of the pipe then allow for the trapped air and water to exit prior to the grout. Grouting of the voids is necessary to complete the structural rehabilitation of the culvert and to reduce the possibility of any future piping of the culvert backfill.

Where conventional grouting will fill the large voids adjacent to the culvert created by infiltration or piping, compaction grouting will densify the soil. The equipment, method of injection, and makeup of the grout will all be different from what is required for conventional grouting. Compaction grouting in addition to or in lieu of conventional grouting may be necessary. However, the benefit of knowing that there is a well-compacted, stabilized soil in the vicinity of the culvert may not outweigh the expense involved in the process of compaction grouting.

www.EngineeringEBooksPdf.com

CHAPTER 6
SAFETY SYSTEMS

Roger L. Brockenbrough, P.E.
President
R. L. Brockenbrough & Associates, Inc.
Pittsburgh, Pennsylvania

One of the most important and most challenging aspects of highway engineering is designing to enhance life safety. This chapter focuses on roadside safety, which encompasses the safety of vehicles that leave the roadway and shoulder.

This material is based largely on the publication of the American Association of State Highway and Transportation Officials (AASHTO), *Roadside Design Guide* (2002, 2006), which was developed by the AASHTO Subcommittee on Design, Task Force for Roadside Safety, currently under the chairmanship of Keith A. Cota. Made up of about 20 highway engineers with diverse experience, the task force maintains and updates a synthesis of current information and operating practices to serve as a comprehensive guide to individuals and agencies in developing standards and policies. Their contribution to promoting highway safety is gratefully acknowledged.

6.1 CONCEPTS AND BENEFITS OF ROADSIDE SAFETY

The roadside is defined as that area beyond the traveled way and shoulder. Thus, roadside safety is concerned with treatments that minimize the likelihood of serious injuries when a vehicle runs off the roadway.

Roadside safety design has received particular emphasis since the 1960s. The increased awareness of its importance and the development of improved safety concepts and devices have contributed significantly to improved safety. As shown in Fig. 6.1, the traffic fatality rate expressed in terms of driven distance has declined to one-third of that in the mid-1960s. Many factors have contributed to the declining rate, including safer vehicles (occupant restraints, door beams, crash energy management, etc.) and improved roadways (intersection geometry, superelevation, grade separation, etc.). However, roadside improvements have played a key role in reducing fatalities.

Cost-effective roadside safety concepts and features must be incorporated in both new construction and in rehabilitation projects.

www.EngineeringEBooksPdf.com

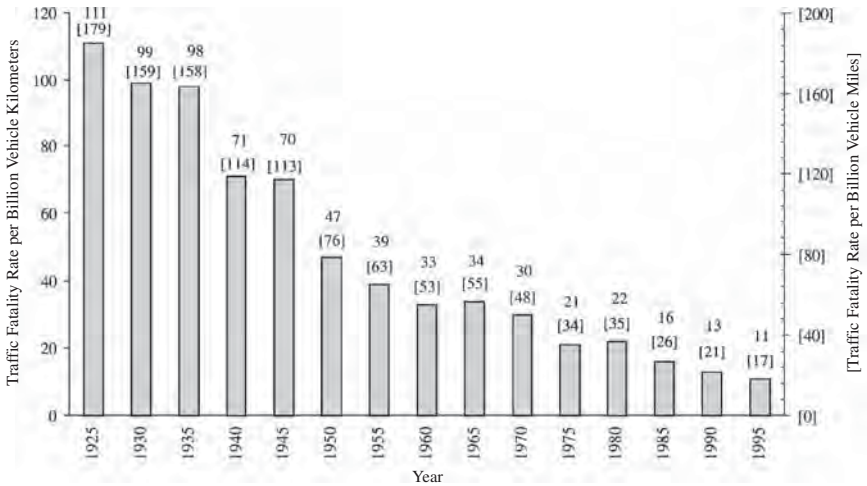

FIGURE 6.1 Traffic fatality rate continues to decline. (*From* Roadside Design Guide, *AASHTO, Washington, D.C., 2002 and 2006, with permission*)

Roadside safety must be addressed because a significant number of vehicles inevitably leave the roadway. There are a variety of reasons for this, such as:

- Driver fatigue or inattention
- Excessive speed
- Driving under the influence of alcohol or drugs
- Collision avoidance
- Roadway condition (ice, snow, rain)
- Vehicle component failure
- Poor visibility

To reduce the severity of accidents involving these errant vehicles, the roadside should have relatively flat slopes and be free of fixed objects. What is known as the *forgiving roadside concept* has generally become an integral part of highway design criteria.

Obstacles most often responsible for roadside fatalities include

- Trees and shrubs
- Utility poles
- Culverts and ditches
- Curbs and walls
- Sign and luminaire supports
- Bridge piers and abutments

Design options often employed for addressing a roadside obstacle include

- Removing the obstacle
- Redesigning the obstacle so it can be safely traversed

www.EngineeringEBooksPdf.com

- Relocating the obstacle
- Using breakaway devices
- Shielding the obstacle with a barrier or crash cushion
- Delineating the obstacle

As with virtually all highway construction, funds for safety improvements are limited, and thus, emphasis must be given to improvements that are cost-effective and offer the greatest opportunities for safety enhancement. Some features such as breakaway supports and bridge railings are routinely included on the basis of a subjective analysis of obvious benefits. In other cases, where alternatives exist, benefit-cost and value engineering studies should be used to aid in rational decisions. Benefits include expected reduction in accident costs, including the cost of personal injuries and property damage, based on the expected reduction in number and severity of accidents associated with the improvement. Costs include direct construction cost and maintenance. The study must be based on a specific project life so that benefits and costs can be annualized. This involves the application of discount rates and life-cycle costs as discussed in Chap. 10. The computer program Roadside Safety Analysis Program (RSAP) is available to aid in the selection process. Contact the Transportation Research Board, NCHRP, 2101 Constitution Ave. NW, Washington, D.C. 20418.

6.2 APPLICATION OF CLEAR ZONE CONCEPT TO SLOPE AND DRAINAGE DESIGN

The clear roadside concept has a direct and obvious application to the selection of slopes and design of drainage features such as ditches, curbs, culverts, and drop inlets. A traversable, unobstructed roadside zone should extend beyond the edge of the driving lane for an appropriate distance so that the motorist can generally stop or slow the vehicle and return to the roadway safely.

The width of the zone depends on the traffic volume, the design speed, and the roadside slope. Vehicles on high-volume, high-speed routes obviously require more room to recover than those on less congested routes. A suggested guide for determining the width of the clear zone is presented in Fig. 6.2. The clear zone distance (width) is given in terms of the range of design average daily traffic (ADT) or vehicles per day (VPD), the design speed, and the roadside slope. Enter the chart from the left with the slope, intersect the appropriate design speed curve, and project down to the appropriate scale at the bottom to read the suggested width. The width should be used as a guide and may be adjusted for site-specific conditions and practicality. The AASHTO guide gives modification factors (1.1 to 1.5) that can be applied to increase the clear distance on horizontal curves where accident histories or site investigations show a need. Increased superelevation may be another option, depending on climatic conditions.

6.2.1 Roadside Geometry

Except for flat roadsides, a motorist leaving the roadway may encounter a foreslope (negative grade such as on an embankment), a backslope (positive grade such as in a cut section), a transverse slope (such as caused by an intersecting side road), or a drainage channel (change from negative to positive grade).

Foreslopes parallel to the traffic flow may be categorized as recoverable, nonrecoverable, or critical. Recoverable slopes are 1:4 (vertical to horizontal) or flatter, and the

www.EngineeringEBooksPdf.com

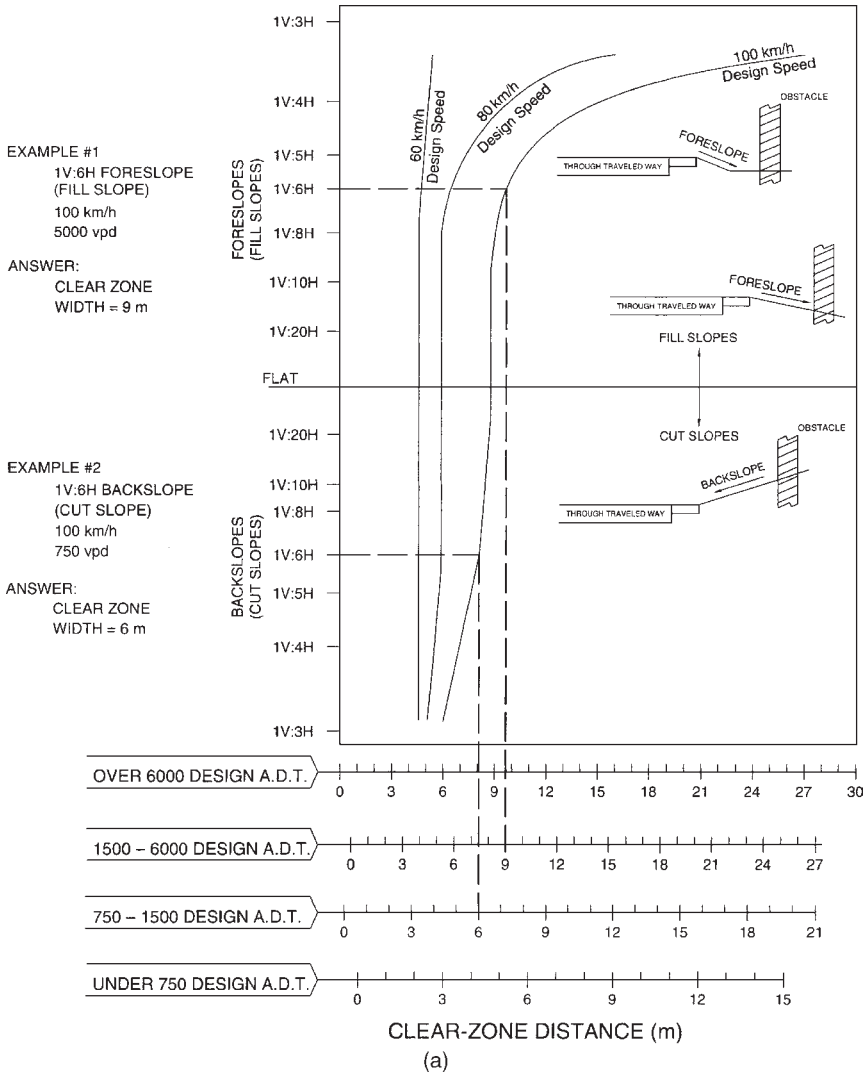

FIGURE 6.2 Clear zone distance curves. (*a*) SI units; (*b*) U.S. Customary units. (*From* Roadside Design Guide, *AASHTO, Washington, D.C., 2002 and 2006, with permission*)

clear zone distance from Fig. 6.2 applies directly. Fixed obstacles such as culvert headwalls should not extend above the embankment in this zone. Nonrecoverable slopes, generally between 1:4 and 1:3, are traversable, but most motorists will reach the bottom of the slope and not be able to stop or return to the roadway easily. Fixed obstacles should not be constructed along such slopes, and a clear runout area at the bottom of the slope is desirable. Critical slopes, generally steeper than 1:3, are those on which a vehicle is likely to overturn. A barrier might be warranted in such cases. Figure 6.3 discusses alternatives that might be considered on critical parallel foreslopes.

www.EngineeringEBooksPdf.com

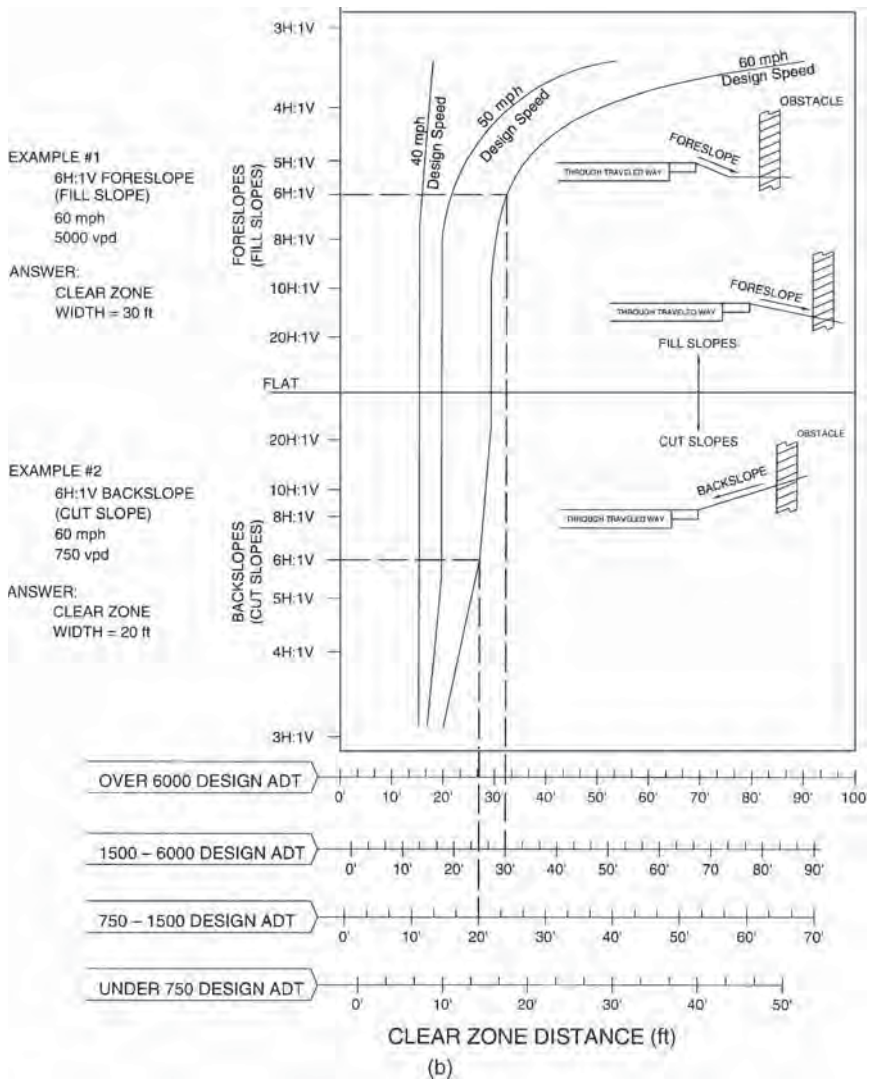

FIGURE 6.2 (*Continued*)

Many highway agencies construct so-called barn roof sections in embankment conditions as illustrated in Fig. 6.4. A relatively flat slope is provided adjacent to the roadway, followed by a steeper slope and a clear runout area at the bottom. This is more economical than a continuous flat slope and apparently safer than a continuous steeper slope from the edge of the shoulder. In applying the clear zone concept, side slopes ranging from flat to 1:4 may be averaged to produce a composite clear zone distance. Slopes that change from negative to positive should be treated as channel sections. Changes in slope and toes of slopes should generally be rounded to keep vehicles in contact with the ground and enhance traversability.

www.EngineeringEBooksPdf.com

EXAMPLE 1
Design ADT: 12,000
Design Speed: 70 mph (110 km/h)
Recommended clear-zone distance for 1V:6H foreslope: 30 to 34 ft (9 to 10.5 m)

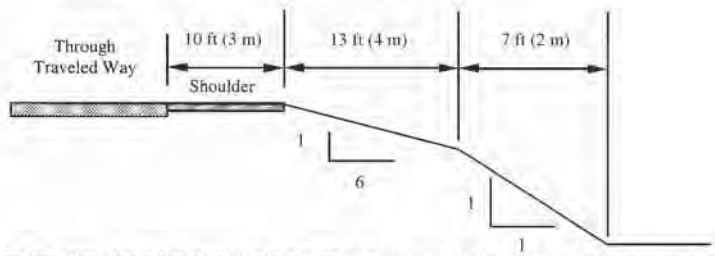

Discussion: Since the critical foreslope is only 23 ft (7 m) from the through traveled way, instead of the suggested 30 to 34 ft (9 to 10.5 m), it should be flattened if practical or considered for shielding. However, if this is an isolated obstacle and the roadway has no significant crash history, it may be appropriate to do little more than delineate the drop-off in lieu of foreslope flattening or shielding.

Although a "weighted" average of the foreslopes may be used, a simple average of the clear-zone distances for each foreslope is accurate enough if the variable foreslopes are approximately the same width. If one foreslope is significantly wider, the clear-zone computation based on that foreslope alone may be used.

EXAMPLE 2
Design ADT: 350
Design Speed: 40 mph (60 km/h)
Recommended clear-zone distance for 1V:5H foreslope: 7 to 10 ft (2 to 3 m)

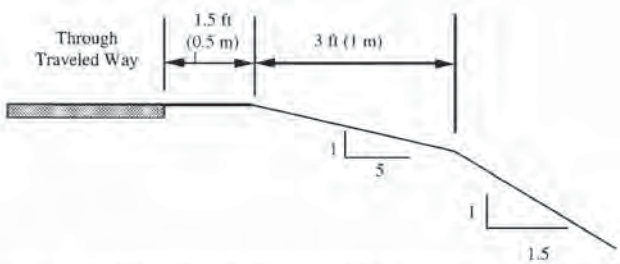

Discussion: The available 4.5 ft (1.5 m) is 2.5 to 5.5 ft (0.5 to 1.5 m) less than the recommended recovery area. If much of this roadway has a similar cross-section and no significant run-off-the-road crash history, neither foreslope flattening nor a traffic barrier would be recommended. On the other hand, even if the 1V:5H foreslope were 10 ft (3 m) wide and the clear-zone requirement were met, a traffic barrier might be appropriate if this location had noticeably less recovery area than the rest of the roadway and the embankment was unusually high.

FIGURE 6.3 Examples of application of clear zone concept to critical parallel foreslopes on (Example 1) high-volume and (Example 2) low-volume highways. (*From* Roadside Design Guide, *AASHTO, Washington, D.C., 2002 and 2006, with permission.*)

On *backslopes,* traversability depends on relative smoothness and the presence of fixed obstacles. If traversable (1:3 slope or flatter) and obstacle free, it may be acceptable. Conversely, a steep rough-sided rock cut (one that will cause excessive vehicle snagging) should be shielded unless it is outside the clear zone.

Transverse slopes may be created by median crossovers, intersecting side roads, or driveways. These generally create a more serious condition than parallel slopes because they can be struck head on by errant vehicles. To minimize the effect, slopes of 1:10

www.EngineeringEBooksPdf.com

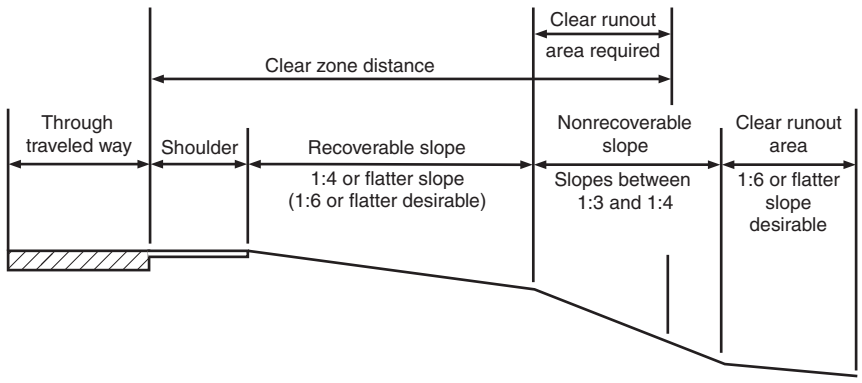

FIGURE 6.4 Example of "barn roof" section for parallel foreslope design; recoverable slope is followed by a nonrecoverable slope. (*From* Roadside Design Guide, *AASHTO, Washington, D.C., 2002 and 2006, with permission*)

or flatter are desirable where practical. Steeper slopes may be suitable for low-speed facilities. Drainage pipes should be located as far from the roadway as practical. Also, where a vehicle could be led into the culvert inlet or outlet by a drainage channel, consideration should be given to special inlet or outlet treatment, as subsequently discussed.

Drainage channels are open flow areas generally paralleling the highway embankment within the right-of-way. They serve to collect surface runoff that drains from the highway and convey it to outlets. In addition to providing drainage functions, channels should be proportioned so that they are traversable. The shaded areas in Figs. 6.5 and 6.6 show preferred (traversable) slopes for the sides of channels. Where practical, channel sections outside the shaded areas may be reshaped, converted to a closed system (culvert), or shielded by a barrier. For all channels, roadside hardware (for example, sign supports) should not be located in or near channel bottoms or slopes because vehicles leaving the roadway may be funneled along the channel and impact the obstacle. Breakaway hardware may not function properly if impacted by airborne or sideways-sliding vehicles.

6.2.2 Drainage Features

The drainage system should be designed, constructed, and maintained with considerations for both the hydraulic function and roadside safety. (See Chap. 5.) In addition to channels, elements of the system include curbs, cross-drainage (transverse) structures (pipes and culverts), parallel drainage structures, and drop inlets. The following three options, listed in order of preference, are applicable to each:

- Eliminate nonessential drainage structures.
- Design or modify drainage structures so they are traversable or present minimal hazard to errant vehicles.
- If relocation or redesign is impractical, shield with a traffic barrier if in a vulnerable location.

Curbs may be classified as vertical or sloping types. Vertical curbs, defined as those with vertical or nearly vertical faces, 6 in (150 mm) or more in height, discourage

www.EngineeringEBooksPdf.com

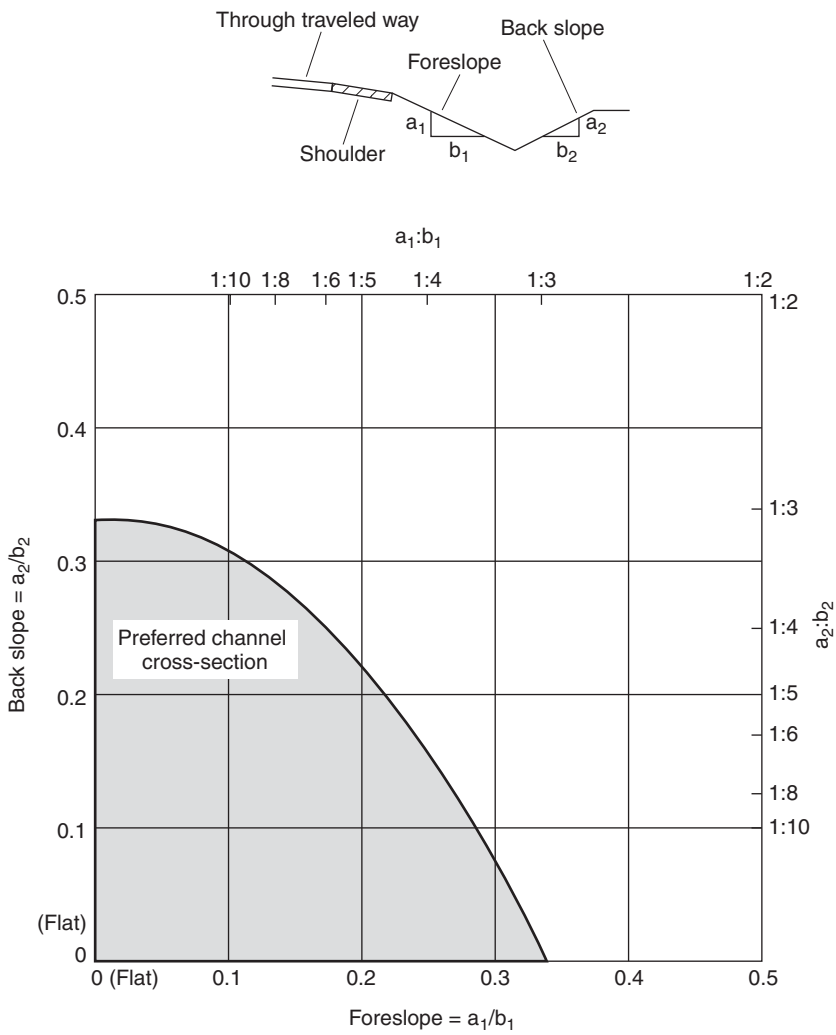

FIGURE 6.5 Preferred cross-sections for channels with abrupt slope changes. Chart is applicable to all vee ditches, rounded channels with a bottom width less than 8 ft (2.4 m), and trapezoidal channels with bottom widths less than 4 ft (1.2 m). (*From* Roadside Design Guide, *AASHTO, Washington, D.C., 2002 and 2006, with permission*)

motorists from leaving the highway. Sloping curbs have lower heights with sloping faces that can be easily traversed. Heights of 4 in (100 mm) or less are preferred for the latter to avoid dragging the underside of vehicles. Neither type of curb is desirable on high-speed highways, because either may cause overturning, particularly if the vehicle is spinning or slipping. In urban areas, a minimum horizontal clearance of 1.5 ft (0.5 m) beyond the face of the curb should be provided to obstacles. On high-speed roadways, curbs should not be used in front of traffic barriers, because unpredictable postimpact trajectories can result. If a curb must be used, locate it flush with the face of the railing

www.EngineeringEBooksPdf.com

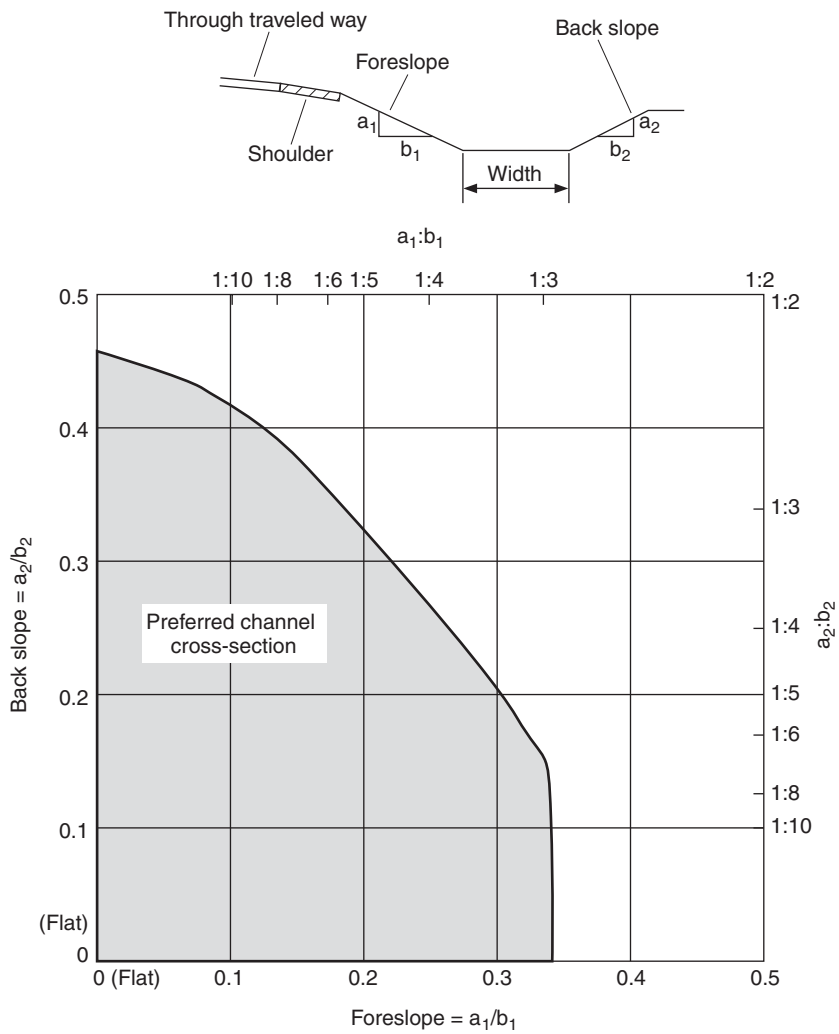

FIGURE 6.6 Preferred cross-sections for channels with gradual slope changes. Chart is applicable to rounded channels with bottom widths of 8 ft (2.4 m) or more and trapezoidal channels with bottom widths equal to or greater than 4 ft (1.2 m). (*From* Roadside Design Guide, *AASHTO, Washington, D.C., 2002 and 2006, with permission*)

or behind it. Curb-barrier combinations for bridge railings should be crash-tested unless data are available.

Cross-drainage structures carry streams or drainage water transversely underneath the embankment. They may range in size from 18 in (450 mm) to 10 ft (3 m) or more, may be constructed of concrete, metal, or plastic (in some sizes), and may be furnished as round pipe, elliptical shapes, or boxes. Typically, inlets and outlets of larger structures have concrete headwalls and wingwalls, and those of smaller structures are beveled to match the slope. Pipe may also be furnished with square-cut ends. These designs may result in a

www.EngineeringEBooksPdf.com

fixed object protruding above an embankment or an opening into which a vehicle can drop, causing an abrupt stop. Options available to minimize such obstacles include

- A traversable design
- Extension of the structure so it is less likely to be hit
- Shielding the structure
- Delineating the structure (when other measures are not feasible)

Traversable design. If a slope is generally traversable, the preferred treatment is to extend or shorten the structure and match the inlet or outlet shape to the embankment slope. Further treatment should not be required for small culverts, defined as a single pipe with a diameter of 36 in (900 mm) or less or multiple pipes with diameters of 30 in (750 mm) or less each. Single structures and end treatments wider than 3 ft (1 m) can be made traversable for passenger-size vehicles by using bar grates or pipes to reduce the clear opening width. To maintain hydraulic efficiency, it may be necessary to apply bar grates to flared wingwalls, flared end sections, or culvert extensions larger than the main barrel. Crash tests have shown that automobiles can cross grated culvert end sections on slopes as steep as 1:3, at speeds from 20 to 60 mi/h (30 to 100 km/h), when steel pipe on 30-in (750-mm) centers is used. This spacing does not significantly affect flow unless debris accumulates and causes clogging.

Design recommendations for safety treatment of culvert ends are summarized in Fig. 6.7. Where debris accumulation is not a concern and mowing operations are frequent, smaller openings may be tolerated and grates similar to those for drop inlets may be appropriate. In median areas, consider making culverts continuous and adding a median drainage inlet.

Extension of structure. For larger-sized drainage structures with inlets or outlets that cannot be readily made traversable, the structure can be extended so the obstacle is located at the edge or beyond the clear zone. This reduces but does not eliminate the possibility of hitting the pipe end. If the culvert headwall remains the only fixed object at the edge of the zone, simply extending the opening to the edge may not be the best solution. However, if there are numerous obstacles along the edge of the zone on the section under consideration, extension of the pipe might be an appropriate solution.

Span length, ft (m)		Inside diameter, in (mm)	
		3	(75)
Up to 12	(Up to 3.65)	3.5	(87)
12 to 16	(3.65 to 4.90)	4	(100)
16 to 20	(4.90 to 6.10)	3	(75)
20	(6.10 or less with center support)		

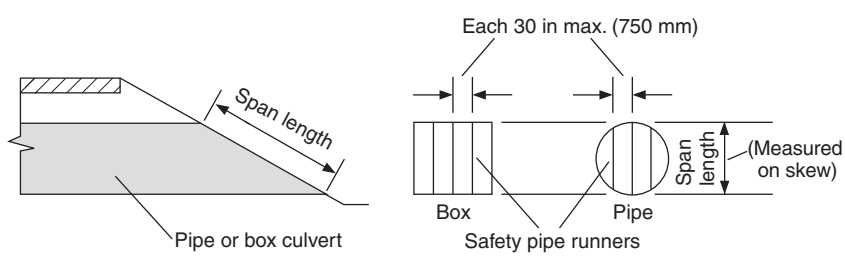

FIGURE 6.7 Safety treatment for ends of culverts showing diameters of grating (schedule 40 steel pipe) for various span lengths. (*From* Roadside Design Guide, *AASHTO, Washington, D.C., 2002 and 2006, with permission*)

www.EngineeringEBooksPdf.com

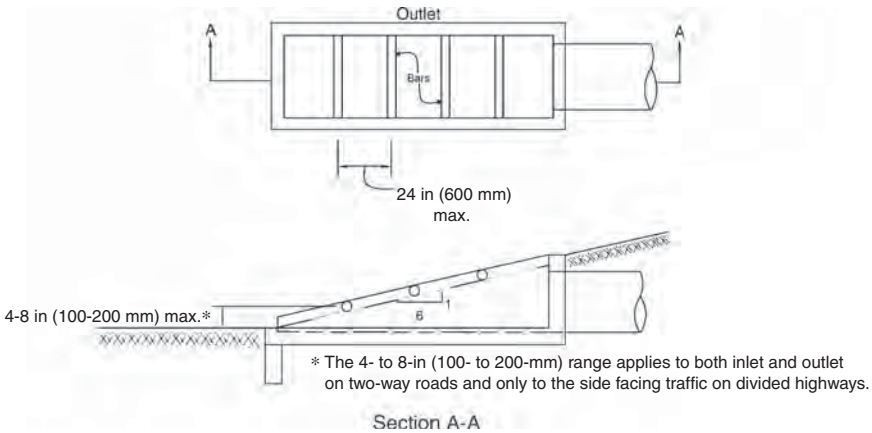

FIGURE 6.8 Safety treatment for drainage inlet or outlet. (*From* Roadside Design Guide, *AASHTO, Washington, D.C., 2002 and 2006, with permission*)

Shielding of structure. An appropriate traffic barrier should be considered for shielding a drainage structure that cannot be reasonably made traversable or extended outside the clear zone. Because the barrier will be closer to the roadway and longer than the obstacle, it is more likely to be hit. However, if properly designed, constructed, and maintained, the barrier should provide an increased level of safety.

Parallel drainage structures are those that are oriented parallel to the traffic flow to carry water under driveways, entrances, ramps, side roads, and median crossovers. Such structures may represent a significant hazard if they can be struck head on by an errant vehicle. Options for safety treatment are similar to those for cross-drainage structures. If entrances are closely spaced, consider converting the open channel into a closed storm drain, backfilling areas between entrances, and eliminating multiple obstacles. Research has shown that, for parallel drainage structures, wheel snagging can be significantly reduced with pipe grates oriented perpendicular to the traffic direction and having a spacing of 24 in (600 mm) or less. Single pipes of 24 in (600 mm) diameter or less generally do not require a grate, but multiple small pipes may require one. Figure 6.8 illustrates a design for the ends of a parallel culvert. In situations such as intersecting ramps, consider relocating the culvert farther back from the main road, out of the clear zone.

Drop inlets include on-roadway and off-roadway structures. On-roadway inlets, which are located along the shoulder to intercept surface runoff, include curb opening inlets, grated inlets, and slotted drains. If installed flush with the pavement, they do not cause a significant safety problem. Off-roadway drop inlets are used in medians of divided roadways or in roadside ditches. The hazard can be minimized by making the inlets flush with the drainage surface. Safety treatment should be such as to prevent a vehicle from dropping into the inlet, snagging, and losing control.

6.3 SIGN AND LUMINAIRE SUPPORTS AND SIMILAR FEATURES

Approximately 15 percent of all fixed-object fatalities involve sign and luminaire supports or utility poles. The options available to the highway engineer to improve on this record

www.EngineeringEBooksPdf.com

are similar to those presented earlier: remove or redesign, relocate, use a breakaway device, shield, or delineate. Although it is desirable to have an unobstructed roadside, it is not always possible to relocate appurtenances such as signing and lighting supports, because they must remain near the roadway to fulfill their intended purpose. Thus, emphasis is given to the use of breakaway hardware—selection of the most appropriate device and installing it to ensure acceptable performance. (See Chap. 7.) Supports should be designed in accordance with AASHTO's *Standard Specification for Structural Supports for Highway Signs, Luminaires, and Traffic Signals*.

Breakaway supports include all types of sign, luminaire, and traffic signal supports designed to yield when hit by a vehicle. Typical release mechanisms include slip planes, plastic hinges, and fracture elements. Criteria for breakaway supports are given in National Cooperative Highway Research Program (NCHRP) Report 350, *Recommended Procedures for the Safety Performance Evaluation of Highway Features.* The criteria require that a breakaway support fail in a predictable manner when struck head on by a 1800-lb (820-kg) vehicle, or its equivalent, at speeds of 20 and 60 mi/h (35 and 100 km/h). It is desirable to limit the occupant impact velocity to 10 ft/s (3.0 m/s), but values as high as 16 ft/s (5.0 m/s) are acceptable. Also, the maximum stub height is set at 4 in (100 mm) to avoid snagging the undercarriage after impact. The crash vehicle must remain upright with no significant deformation or intrusion of the passenger compartment.

Full-scale crash tests, tests with bogie vehicles (reusable, adjustable surrogate vehicle), and tests with pendulums (having special nose sections to model vehicles) are used for acceptance. Pendulum tests are the least expensive, but are used mostly for luminaire support hardware and are mainly limited to 20 mi/h (35 km/h). NCHRP Report 350 discusses acceptance testing. Tests are run in a standard soil, but weak soil should be used in addition for any feature whose impact performance is sensitive to soil-structure interaction.

Many general practices are similar to those previously discussed. Supports should not be placed in drainage ditches, because vehicles may be channeled into the obstacle and freezing might interfere with proper functioning of the breakaway device. Also, breakaway supports must not be located near ditches or on steep slopes where a vehicle is likely to be partially airborne at impact, because breakaway devices may bind and not function properly when hit in this manner. They have been developed to be struck about 20 in (500 mm) above the ground.

Locate supports where they are least likely to be hit, such as behind roadway barriers (beyond design deflections of the barriers) or on existing structures. In general, only when the use of breakaway supports is not feasible should a traffic barrier or crash cushion be used for shielding. Generally, breakaway supports should be used unless an engineering study indicates otherwise. Concern for pedestrians being struck by falling supports after a crash has led to the use of fixed supports in some urban areas such as near bus shelters or where there are extensive pedestrian concentrations.

6.3.1 Sign Supports

Roadway signs include overhead signs, large roadside signs (area over 50 ft^2 or 5 m^2), and small roadside signs.

Overhead signs include sign bridges and cantilevered signs. Their supports are generally too large to adapt to a breakaway design. When possible, install overhead signs on existing bridges or other structures. Otherwise, supports within the clear zone should be shielded with a traffic barrier.

Large roadside signs typically have two or more supports, each of which is of the breakaway type. Figures 6.9 and 6.10 show the loading conditions and the breakaway features.

www.EngineeringEBooksPdf.com

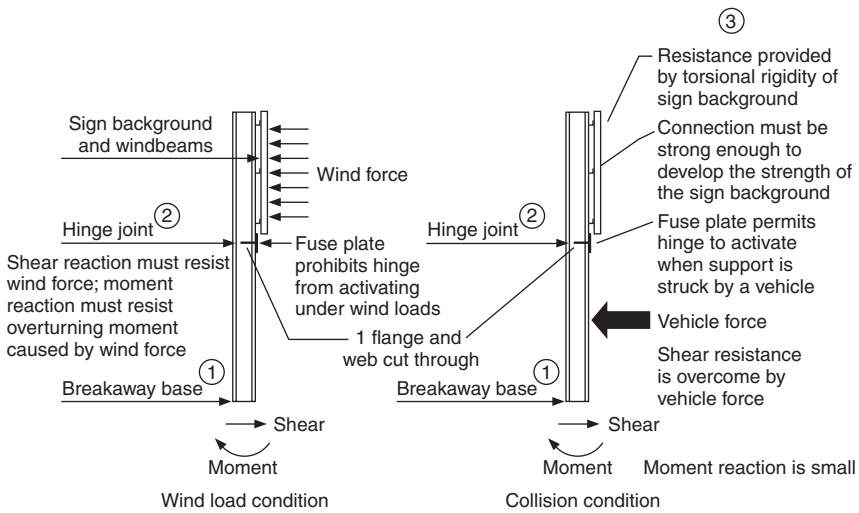

FIGURE 6.9 Wind and impact loads on large roadside sign. (*From* Roadside Design Guide, *AASHTO, Washington, D.C., 2002, with permission*)

Note the hinge joint with fuse plate just below the sign and the breakaway base (shear plate). The supports must resist ice and wind loads and also meet the following criteria:

- The hinge must be at least 7 ft (2.1 m) above ground to prevent windshield penetration.
- A single post 7 ft (2.1 m) or more from another post should have a mass less than 45 lb/ft (65 kg/m); total mass below the hinge but above the shear plate should not exceed 600 lb (270 kg). Two posts spaced less than 7 ft (2.1 m) apart should have a mass less than 18 lb/ft (27 kg/m).
- Supplementary signs should generally not be placed below the hinges.

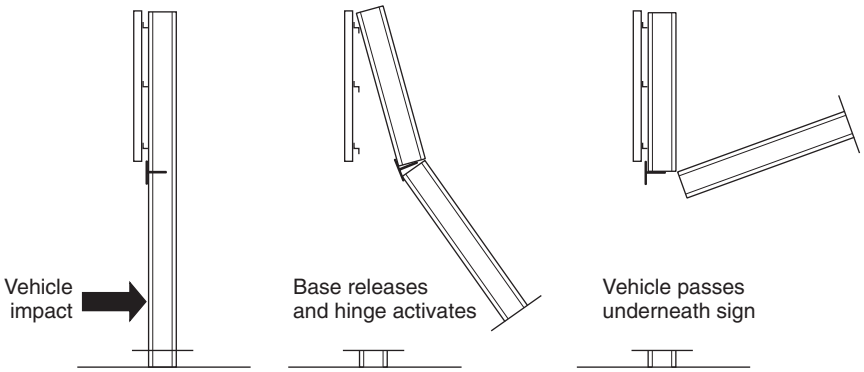

FIGURE 6.10 Impact performance of large roadside sign. (*From* Roadside Design Guide, *AASHTO, Washington, D.C., 2002 and 2006, with permission*)

www.EngineeringEBooksPdf.com

Breakaway mechanisms for large sign supports may be either a fracture or a slip-base type. The fracture type includes couplers that fracture, or in the case of wood posts, simply posts with reduced cross-sections. Slip-base-type mechanisms activate when two parallel plates slide apart as bolts are pushed out under impact. As shown in Fig. 6.11, the designs may be of the unidirectional or multidirectional type. The upper hinge design includes a saw cut through the front flange and web of the plate, and a fuse plate on the front flange (impact side). The fuse plate has slotted bolt holes, and the bolts must be torqued to specified values for proper functioning. Alternatively, the fuse plate may have a line of open holes at the cut line, with the plate designed to rupture at the required load, negating the need for the specific values of bolt torque. Even with the breakaway design feature, it is good practice to locate large signs outside the clear zone where feasible.

Small roadside signs may be driven directly into the soil, set in drilled earth holes, or mounted on a base. U-shaped steel posts driven into the ground can generally bend and yield at the base without special devices. Splicing the posts is not usually recommended, because performance is not predictable. Wood posts set in drilled holes can fracture at the base, as well as steel pipes connected to anchors driven into the ground. Also, small sign supports may be mounted on fracture bases or slip bases of the unidirectional or multidirectional type. A typical unidirectional design uses a four-bolt slotted slip base, inclined in the direction of traffic by 10° to 20°. This angle allows the sign to move up so the impacting vehicle can pass underneath. A hinge in the top of the post is not needed. Multidirectional bases are usually triangular and release when struck in any direction. They are often used in medians and at ends of ramps and similar locations. Because torque requirements for slip base bolts are low, wind vibrations have caused supports to "walk" from the slots under wind vibrations, but this can be prevented by using a sheet metal keeper plate. Overtorquing must be prevented, because this causes high friction between the slip base elements and prevents the support from releasing as intended.

6.3.2 Luminaire Supports

Breakaway supports for luminaires are usually a cast-aluminum transformer-type frangible base, a slip base, or frangible couplers. These devices have been developed to activate when loaded in shear by impacts at a bumper height of about 20 in (500 mm). If the supports are located so that they may be impacted at a greater height, the performance may not be as intended. Thus, foreslopes between the roadway and the support should be limited to 1:6 or flatter. The mast arm of a falling support will usually rotate away from the roadway. However, the danger of falling poles striking pedestrians, bicyclists, and other motorists should be considered.

Breakaway supports are suitable for poles that do not exceed 60 ft (18.5 m) in height and 1000 lb (450 kg). Foundations must be designed for the surrounding soils to prevent the foundation from pushing through the soil. From a roadside safety perspective, a preferred method for lighting major intersections is to use high-mast lighting, because fewer supports are required and they can be located farther from the roadway. Supports located in the clear zone should be protected with a suitable traffic barrier.

6.3.3 Supports for Traffic Signals and Service Devices

Supports for traffic signals are not usually of the breakaway type, because of the potential consequences of the loss of the signal at an intersection. Supports in the clear

www.EngineeringEBooksPdf.com

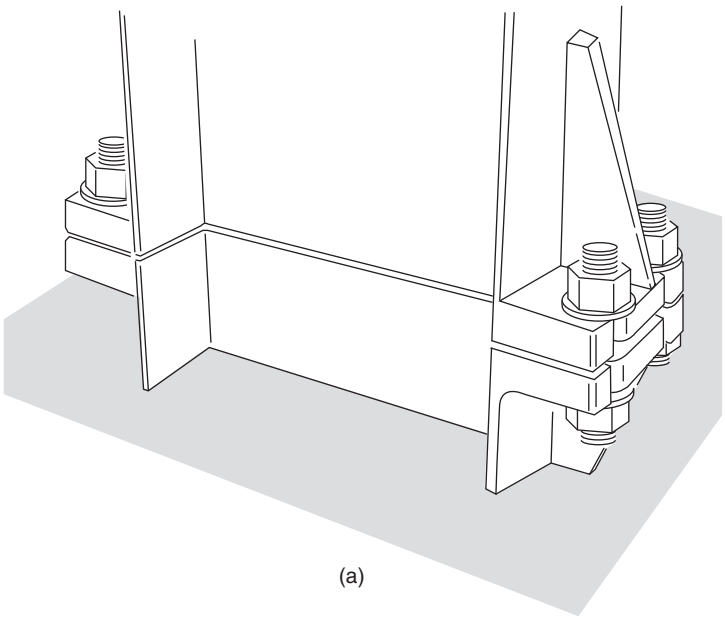

(a)

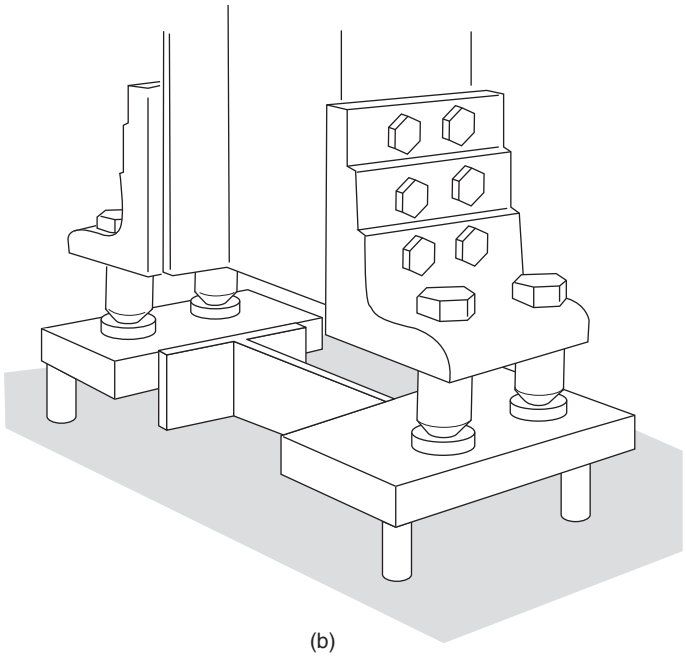

(b)

FIGURE 6.11 Breakaway bases for large overhead signs may provide for (*a*) unidirectional or (*b*) multidirectional impacts. (*From* Roadside Design Guide, *AASHTO, Washington, D.C., 1996, with permission*)

www.EngineeringEBooksPdf.com

zone should be shielded. Call boxes can often be located behind existing barriers, but a breakaway support is an option. The call box should be securely attached to its support to prevent windshield penetration if dislodged. At highway-railroad crossings, highway and railroad officials should cooperate in deciding on the types of warning devices needed, such as crossbucks, flashing lights, or gates. If the support for the device is located in the clear zone, consider shielding it with a crash cushion. There is seldom room for a longitudinal barrier. Fire hydrants have not been tested to current criteria, but at least one breakaway design is available that includes immediate water shutoff after impact. Mailbox supports should be embedded no more than 24 in (600 mm) in the ground and not set in concrete, the mailboxes should be attached to the supports so that they will not separate after impact, and multiple mailboxes should be spaced apart by a distance of three-fourths of their height.

6.3.4 Supports for Utility Poles

Utility supports represent a serious hazard that accounts for about 10 percent of all fixed-object fatal crashes. Elimination, relocation, and burying the lines are preferred options. Increased spacings or multiple use may reduce the number of poles. A breakaway device has been tested and may be considered for vulnerable locations. A breakaway device for utility pole guy wires has also been developed. As with other obstacles, shielding is also an option.

6.3.5 Trees

Collisions of single vehicles with trees account for nearly 25 percent of fixed-object fatal crashes and result in about 3000 deaths each year. Most of these are along county and township roads, which tend to have narrow recovery zones. Certainly, trees should not be planted in the clear zone for new construction, and mowing should discourage growth of seedlings. For existing situations, the hazard should be evaluated. Generally, a single tree with an expected mature size over 4 in (100 mm) is considered a fixed object. For small trees close together, calculate an equivalent diameter based on the combined cross-section area. Large trees should be removed where possible. Warning signs and roadway delineators can be used to indicate where extra caution is advised. Pavement markings and shoulder rumble strips can be helpful. Roadside barriers should generally be used only where the severity of striking the tree is greater than that of striking the barrier.

6.4 WARRANTS FOR ROADSIDE BARRIERS

Longitudinal roadside barriers are used to shield motorists from natural or human-made obstacles located along either side of the traveled way, and sometimes to protect pedestrians and bicyclists. Median barriers and barrier end treatments are discussed separately in Arts. 6.9 and 6.12.

Barriers must contain and redirect vehicles. Because of the complicated dynamic behavior involved, the most effective way to ensure performance of new designs is through full-scale crash testing. Standard crash tests are presented in NCHRP Report 350, "Recommended Procedures for the Safety Performance Evaluation of Highway Features." To match barrier performance to service needs, a series of six test levels are

www.EngineeringEBooksPdf.com

recommended to evaluate occupant risk, structural integrity, and postimpact vehicle behavior. Various vehicle masses, velocities, and impact angles are included. To view acceptance letters for longitudinal barriers under NCHRP 350, visit the FHWA web site, http://safety.fhwa.dot.gov/fourthlevel/hardware/longbarriers.htm.

NCHRP Report 350 establishes six test levels (TLs) for longitudinal barriers to evaluate risk, structural integrity of the barrier, and vehicle postimpact behavior. A range of vehicle weights (masses), speeds, and impact angles are addressed. The AASHTO *Roadside Design Guide* provides the following description:

> TL-1, TL-2, and TL-3 require successful tests of an 820 kg (1800 lb) car impacting a barrier at an angle of 20 degrees and a 2000 kg (4400 lb) pickup truck impacting a barrier at an angle of 25 degrees, at speeds of 50 km/h, 70 km/h and 100 km/h (30 mph, 45 mph, and 60 mph), respectively. TL-4 adds an 8000 kg (17,600 lb) single-unit truck at an impact angle of 15 degrees and 80 km/h (50 mph) to the TL-3 matrix. TL-5 substitutes a 36,000 kg (80,000 lb) tractor-trailer (van) for the single-unit truck and TL-6 substitutes a 36,000 kg (80,000 lb) tractor-trailer (tanker). (p. 5-1)

Barriers typically go through an experimental phase in which a barrier that has passed crash test evaluation is subjected to an in-service evaluation, and an operational phase in which a barrier that has proven acceptable in the in-service evaluation is used while its performance is further monitored. Barriers are also considered operational if they are used for extended periods and demonstrate satisfactory performance in construction, maintenance, and accident experience.

The criteria by which the need for a safety treatment or improvement can be determined are termed *warrants.* Barrier warrants are based on the premise that traffic barriers should be installed only where they reduce the probability or frequency of potential accidents. Warrants may be based on a subjective analysis of roadside conditions or a benefit-cost study (life-cycle cost analysis). The latter can be used to rationally analyze factors such as design velocity and traffic volume in relation to barrier needs and associated costs and accident costs.. Three options may be evaluated:

- Remove or reduce the area of concern so that it does not require shielding.
- Install an appropriate barrier.
- Leave the area unshielded.

The last of these options would usually be cost-effective only where the accident probability is low.

The main uses of roadside barriers are to shield either embankments or obstacles, as discussed below. Barriers may also be used to protect pedestrians, school yards, or bicyclists. There are no firm criteria for these applications, and each must be evaluated on its own merits.

6.4.1 Embankments

As indicated in Fig. 6.12, the main factors considered in determining the need for barriers are the embankment height and the side slope. These criteria are based on studies of the severity of encroachments on embankments as compared with impacts with roadside barriers. The figure does not include the probability of an encroachment or relative costs. Some states have made their own studies and developed charts having a series of curves for different traffic densities.

www.EngineeringEBooksPdf.com

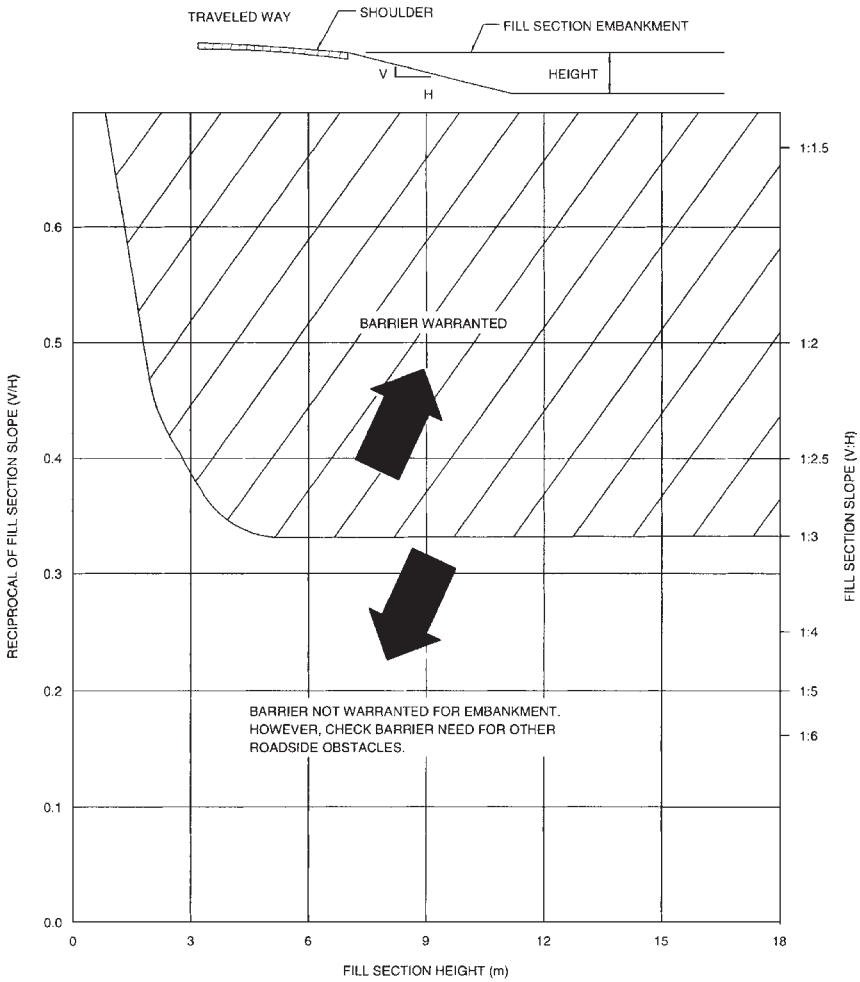

(a)

FIGURE 6.12 Embankment warrants based on comparative risk analysis. (*a*) SI units; (*b*) U.S. Customary units. (*From* Roadside Design Guide, *AASHTO, Washington, D.C., 2002 and 2006, with permission*)

6.4.2 Obstacles

Roadside obstacles include nontraversable terrain and fixed objects, either constructed (such as culvert headwalls or structural supports) or natural (such as trees). Such obstacles account for over 30 percent of highway fatalities. The need for a barrier depends on both the nature of the obstacle and the probability that it will be hit. Table 6.1 lists the major types of obstacles and considerations for barrier warrants. Refer to the clear zone chart (Fig. 6.2) as a guide in determining whether the location of an obstacle constitutes a significant threat.

www.EngineeringEBooksPdf.com

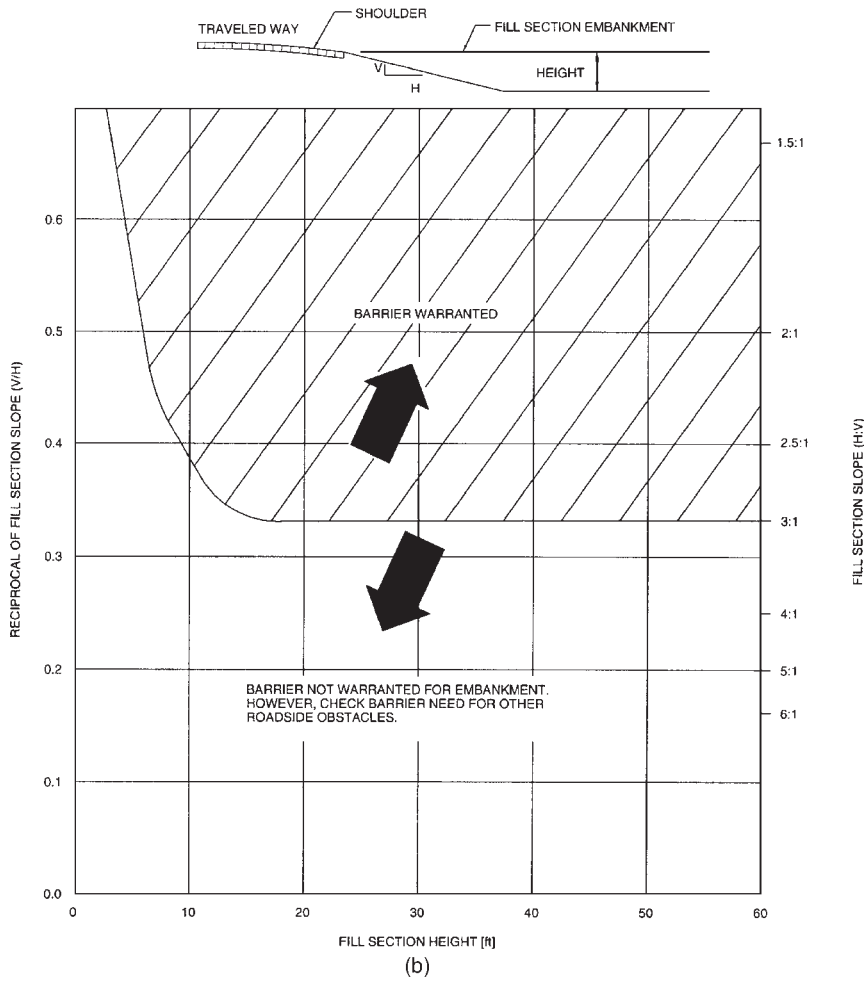

(b)

FIGURE 6.12 (*Continued*)

6.5 CHARACTERISTICS OF ROADSIDE BARRIERS

Depending on their deflection characteristics upon impact, roadside barriers can be classified as flexible, semirigid, or rigid. Table 6.2 lists the most widely used barriers in each classification. Details of most of these operational barriers are presented along with other available information in Figs. 6.13 through 6.22. The dynamic deflection listed is that observed during the standard test defined by NCHRP Report 350 for the test levels listed in Table 6.2 as defined in Art. 6.4. Other characteristics of the barriers are discussed below.

www.EngineeringEBooksPdf.com

TABLE 6.1 Barrier Warrants for Nontraversable Terrain and Roadside Obstacles*†

Bridge piers, abutments, and railing ends	Shielding generally required
Boulders	A judgment decision based on nature of fixed object and likelihood of impact
Culverts, pipes, headwalls	A judgment decision based on size, shape, and location of obstacle
Cut and fill slopes (smooth)	Shielding not generally required
Cut and fill slopes (rough)	A judgment decision based on likelihood of impact
Ditches (parallel)	Refer to Figs. 6.5 and 6.6
Ditches (transverse)	Shielding generally required if likelihood of head-on impact is high
Embankment	A judgment decision based on fill height and slope (see Fig. 6.12)
Retaining walls	A judgment decision based on relative smoothness of wall and anticipated maximum angle of impact
Sign and luminaire supports‡	Shielding generally required for nonbreakaway supports
Traffic signal supports§	Isolated traffic signals within clear zone on high-speed rural facilities may warrant shielding
Trees	A judgment decision based on site-specific circumstances
Utility poles	Shielding may be warranted on a case-by-case basis
Permanent bodies of water	A judgment decision based on location and depth of water and likelihood of encroachment

*Shielding nontranversable terrain or a roadside obstacle is usually warranted only when it is within the clear zone and cannot practically or economically be removed, relocated, or made breakaway and it is determined that the barrier provides a safety improvement over the unshielded condition.

†Marginal situations, with respect to placement or omission of a barrier, will usually be decided by accident experience, either at the site or at a comparable site.

‡Where feasible, all sign and luminaire supports should be a breakaway design regardless of their distance from the roadway if there is reasonable likelihood of their being hit by an errant motorist. The placement and locations for breakaway supports should also consider the safety of pedestrians from potential debris resulting from impacted systems.

§In practice, relatively few traffic signal supports, including flashing light signals and gates used at railroad crossings, are shielded. If shielding is deemed necessary, however, crash cushions are sometimes used in lieu of a longitudinal barrier installation.

Source: From *Roadside Design Guide,* AASHTO, Washington, D.C., 2002 and 2006, with permission.

6.5.1 Flexible Systems

The *three-cable system* (Fig. 6.13) has been successfully tested to TL-3. It is made up of three steel cables mounted on weak posts. The cable barrier redirects impacting vehicles after the cable deflects and develops tension, with the posts offering little direct resistance. Several states allow a backslope as steep as 1:2 behind the rail. If the barrier is placed on the inside of a curve, additional deflection will occur before tension develops in the cable, and thus it may be desirable to limit the radius. New York installs the barrier having S3 × 5.7 (S75 × 8.5) steel posts for radii of 721.5 ft (220 m) or more with the standard 16-ft (4.9-m) post spacing, and for radii of 442.5 ft (135 m)

www.EngineeringEBooksPdf.com

TABLE 6.2 Classification of Roadside Barriers and Approved Test Levels

Barrier system	Test level
Flexible systems	
Three-strand cable (weak-post)	TL-3
W-beam (weak-post)	TL-2
Modified W-beam (weak-post)	TL-3
Ironwood aesthetic barrier	TL-3
Semirigid systems	
Box-beam (weak-post)	TL-3
Blocked-out W-beam (strong-post)	
Steel or wood post with wood or plastic block	TL-3
Steel post with steel block	TL-2
Blocked-out thrie-beam (strong-post)	
Wood or steel post with wood or plastic block	TL-3
Modified thrie-beam (strong-post)	TL-4
Merritt Parkway aesthetic guardrail	TL-3
Steel-backed timber guardrail	TL-3
Rigid systems (concrete and masonry)	
New Jersey concrete safety-shape	
32 in (810 mm) tall	TL-4
42 in (1070 mm) tall	TL-5
F-shape barrier	
32 in (810 mm)	TL-4
42 in (1070 mm)	TL-5
Vertical concrete barrier	
32 in (810 mm)	TL-4
42 in (1070 mm)	TL-5
Single-slope barrier	
32 in (810 mm)	TL-4
42 in (1070 mm)	TL-5
Ontario tall-wall median barrier	TL-5
Stone masonry wall/precast masonry wall	TL-3

Source: From *Roadside Design Guide,* AASHTO, Washington, D.C., 2002 and 2006, with permission.

or more with a 12-ft (3.7-m) post spacing. Advantages of the three-cable barrier include low initial cost, effective vehicle containment and redirection over a wide range of vehicle sizes and installation conditions, low deceleration forces, and functionality in snow or sand areas because the open design prevents drifting. Disadvantages include the long lengths that are nonfunctional and must be repaired after an impact, the clear area behind the barrier needed to accommodate the design deflection distance, reduced effectiveness on the inside of curves, and sensitivity to correct height installation and maintenance.

The *W-beam (weak-post) system* (Fig. 6.14) behaves much like a cable system, but the deflection is much less. Thus, the required clear area behind the barrier is less. The

www.EngineeringEBooksPdf.com

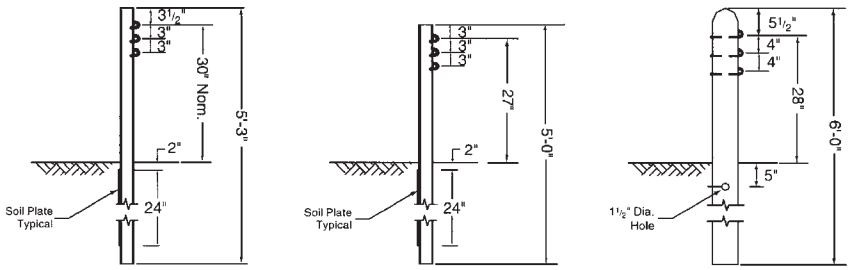

G1-a G1-b G1-c

AASHTO Designation:	G1-a	G1-b	G1-c
Post Type:	S3 x 5.7 steel	4 lb/ft steel U-channels	5 ½-in-dia. modified wood
Post Spacing:	16 ft	16 ft	12 ft-6 in
Beam Type:	$^3/_4$-in-dia. steel cables	$^3/_4$-in-dia. steel cables	$^3/_4$-in-dia. steel cables
Maximum Dynamic Deflection:	11 ft-6 in	11 ft-6 in	11 ft-6 in

Remarks: For shallow angle impacts, barrier damage is usually limited to several posts, which must be replaced. Cable damage is rare except in severe crashes. A crashworthy end terminal is critical in each of the cable systems, both to provide adequate anchorage to develop full tensile strength in the cable and to minimize vehicle decelerations for impacts on either end of an installation.

FIGURE 6.13 Three-cable roadside barrier. Conversions: 1 in = 25.4 mm, 1 ft = 0.305 m. (*From* Roadside Design Guide, *AASHTO, Washington, D.C., 2002 and 2006, with permission*)

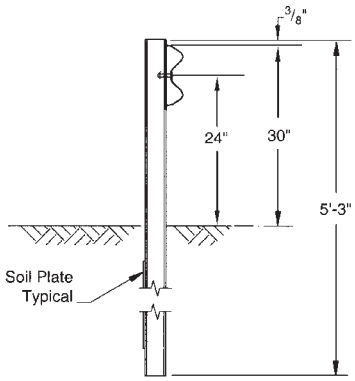

AASHTO Designation:	G2
Post Type:	S3 x 5.7 steel
Post Spacing:	12 ft
Beam Type:	12-gage W-beam
Maximum Dynamic Deflection:	Approximately 6 ft-6 in

Remarks: Barrier as shown is TL-2. TL-3 design is 26 in to center of rail with W-beam rail splices located midway between posts. A steel backup plate is used at all post locations.

FIGURE 6.14 W-beam (weak-post) roadside barrier. Conversions: 1 in = 25.4 mm, 1 ft = 0.305 m. (*From* Roadside Design Guide, *AASHTO, Washington, D.C., 2002 and 2006, with permission*)

www.EngineeringEBooksPdf.com

system meets Tl-2 or TL-3, depending upon details. The system is sensitive to mounting height and irregularities in terrain.

The *Ironwood barrier* shown in Fig. 6.15 is a proprietary weak-post system that meets TL-3. It has a composite rail that consists of round-wood sections with steel channels embedded on the backside. The steel support posts are faced with timber posts above the ground line. Thus, the system presents an all-timber appearance. Crashworthy terminal designs have not been developed but the ends may be anchored in a backslope or flared to the edge of the clear zone.

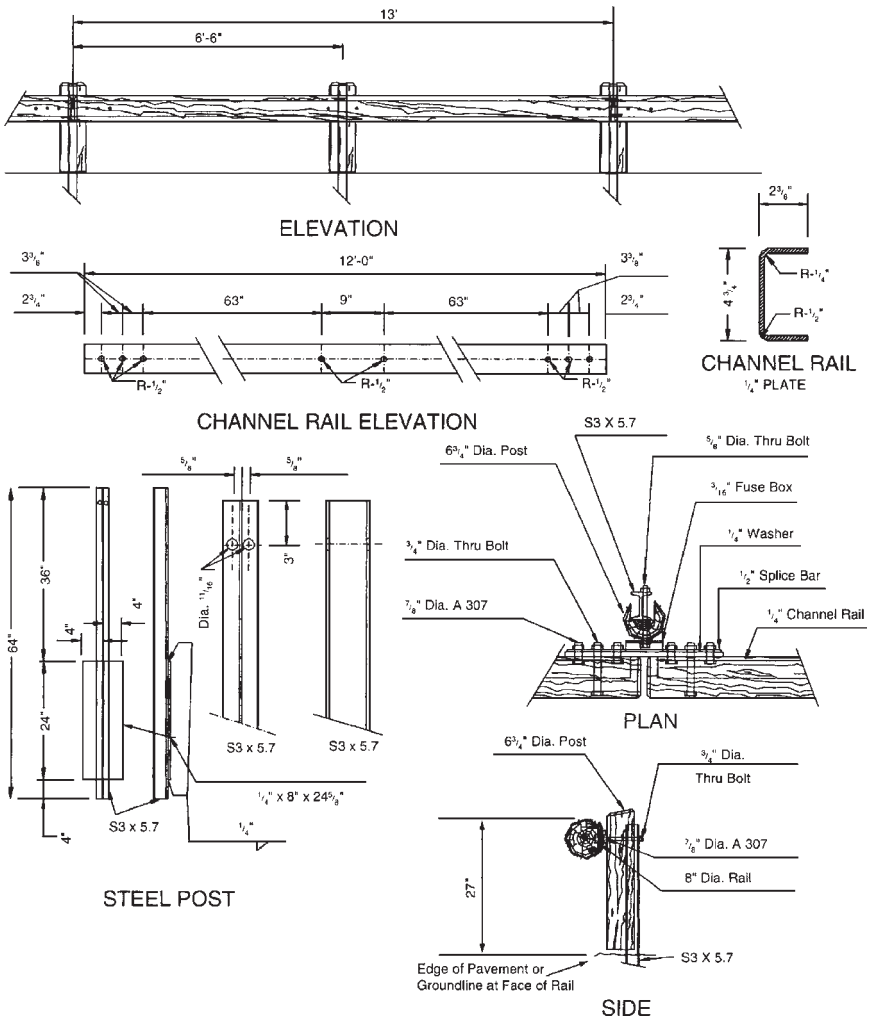

FIGURE 6.15 Ironwood roadside barrier. Conversions: 1 in = 25.4 mm, 1 ft = 0.305 m. (*From* Roadside Design Guide, *AASHTO, Washington, D.C., 2002 and 2006, with permission*)

www.EngineeringEBooksPdf.com

6.5.2 Semirigid Systems

The *box-beam (weak-post) system* (Fig. 6.16) achieves its resistance through the combined flexural and tensile resistance of the box beam. Posts near the impact point are designed to break or tear away and distribute the impact force to adjacent posts. This system meets TL-3. The system is sensitive to mounting height and irregularities in terrain.

The *blocked-out W-beam (strong-post) system* (Fig. 6.17) is the most common barrier. The blockout or offset of the rail from the post minimizes vehicle snagging and reduces likelihood that a vehicle would vault over the barrier. The system is classified as TL-2 or TL-3, depending upon the type of blocks. As with all strong-post systems, resistance is developed by a combination of the tensile and flexural resistance of the rail and the flexural and shear strength of the post. Dynamic deflections are less than those of flexible systems. Bolt washers on the posts can be eliminated on this and other strong-post systems; they are not needed for strength, and it is desirable for the rail to break away as the post rotates downward. Strong-post systems tend to remain functional after moderate collisions, so that immediate repairs are not necessary.

The *blocked-out thrie-beam (strong-post) system* (Fig. 6.18) is similar to the preceding system, but it has a deeper, stiffer, three-corrugation rail. This makes it less prone to damage during impact, allows higher rail mounting, and is better able to contain larger vehicles under some impact conditions. The system is classified as TL-2 or TL-3, depending upon the type of blocks.

The *modified thrie-beam system* (Fig. 6.19) has a steel blockout with a triangular notch cut from its web. This allows the lower part of the beam and the face of the spacer block to bend in during impact, causes the rail face to remain nearly vertical as the post is bent back, and reduces likelihood that a vehicle would roll over the barrier.

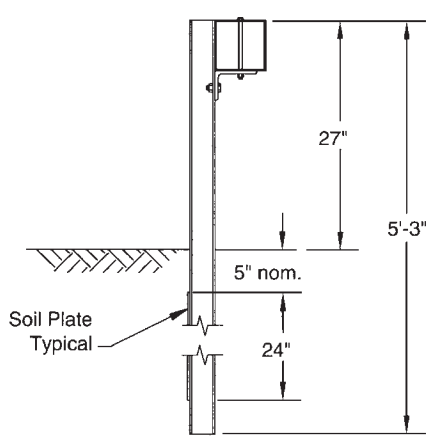

AASHTO Designation:	**G3**
Post Type:	S3 x 5.7 steel
Post Spacing:	6 ft
Beam Type:	6 in x 6 in x 0.19 in steel tube
Maximum Dynamic Deflection:	Approximately 5 ft

FIGURE 6.16 Box-beam (weak-post) roadside barrier. Conversions: 1 in = 25.4 mm, 1 ft = 0.305 m. (*From* Roadside Design Guide, *AASHTO, Washington, D.C., 2002 and 2006, with permission*)

www.EngineeringEBooksPdf.com

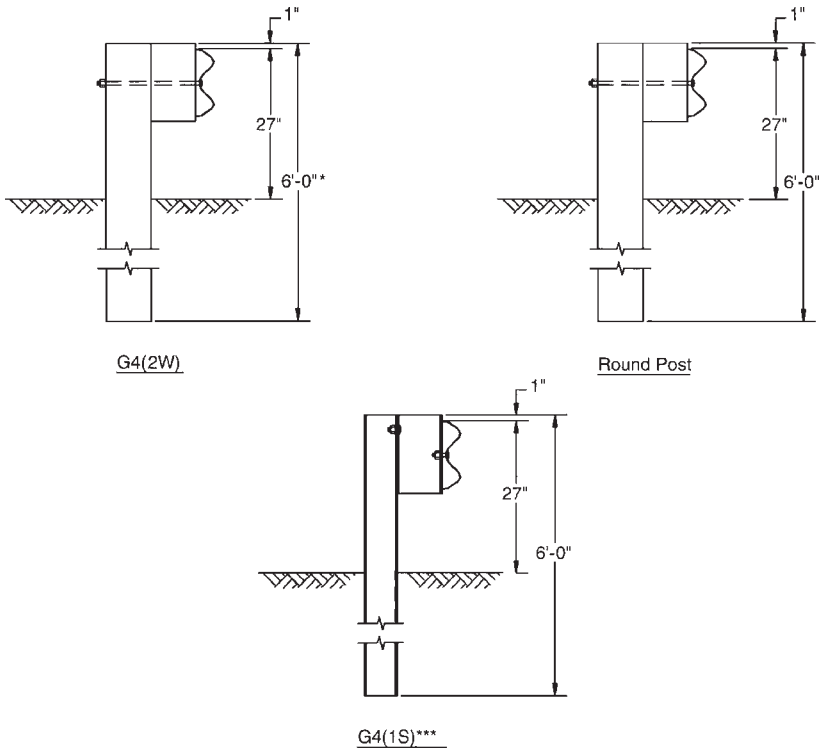

AASHTO designation varies with post type as noted below:

Post Type:	G4(2W)–6 in x 8 in wood**
	Round post–7-in-diameter wood
	G4(1S)–6 x 9 steel***
Post Spacing:	6 ft-3 in
Beam Type:	12-gage W-beam
Maximum Dynamic Deflection:	Approximately 3 ft

* 5 ft-4 in posts are also acceptable

** 8 in x 8 in wood posts are also acceptable

*** TL-2 with steel blocks; TL-3 with wood or plastic blocks

FIGURE 6.17 Blocked-out W-beam (strong-post) roadside barrier. Conversions: 1 in = 25.4 mm, 1 ft = 0.305 m. (*From* Roadside Design Guide, *AASHTO, Washington, D.C., 2002 and 2006, with permission*)

Also, bolt washers have been eliminated on the posts, as discussed previously. The modifications have resulted in a TL-4 rating. Repair costs of either thrie-beam system should be considerably less than for other metal barrier systems, because damage tends to be slight in shallow-angle impacts. Also, it is considered easier to install and maintain than a W-beam system with rub rail.

www.EngineeringEBooksPdf.com

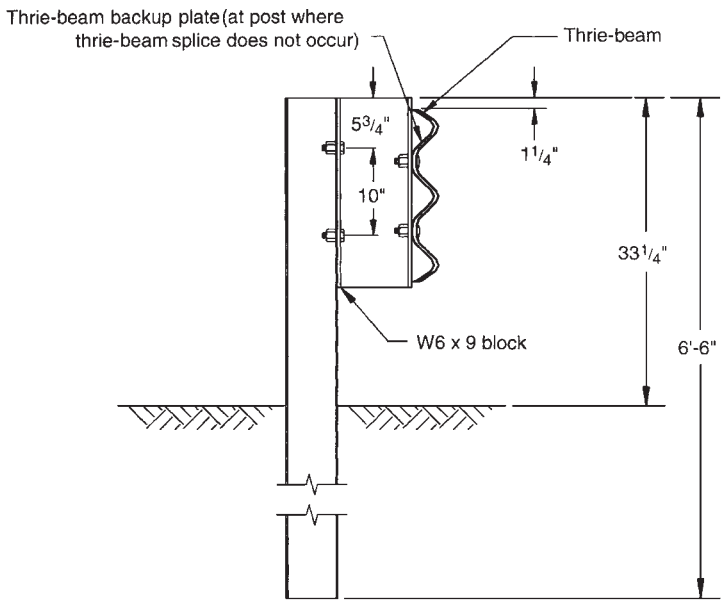

AASHTO Designation:	**G 9**
Post Type:	W6 x 9 steel or 6 in x 8 in wood*
Post Spacing:	6 ft-3 in
Beam Type:	12-gage thrie-beam
Maximum Dynamic Deflection:	Approximately 24 in

* TL-2 with steel posts and steel blocks; TL-3 with steel or wood posts and wood or plastic blocks

FIGURE 6.18 Blocked-out thrie-beam (strong-post) roadside barrier. Conversions: 1 in = 25.4 mm, 1 ft = 0.305 m. (*From* Roadside Design Guide, *AASHTO, Washington, D.C., 2002 and 2006, with permission*)

The *steel-backed timber-rail system* (Fig. 6.20) is an aesthetic alternative to conventional systems, often selected for use along park roads. It has been successfully tested to TL-3.

6.5.3 Rigid Systems

The *concrete safety shape system* (Fig. 6.21), which has a sloping front face, is similar to the concrete median barrier (Art. 6.9.1) but usually has a vertical back face. The reduced cross-section of the roadside barrier version makes it more vulnerable to overturning, thus requiring more reinforcing steel and/or a more elaborate footing design. The New Jersey shape at a height of 32 in (810 mm) meets TL-4 and at a height of 42 in (1070 mm) meets TL-5. Both the New Jersey profile and the F-shape profile shown in Fig. 6.21 are acceptable. The F-shape reportedly showed better performance in crash tests with 1800-lb (820-kg) cars and 18,000-lb (8000-kg) single-unit trucks. Higher designs have been tested and constructed to redirect heavy vehicles. For example, the

www.EngineeringEBooksPdf.com

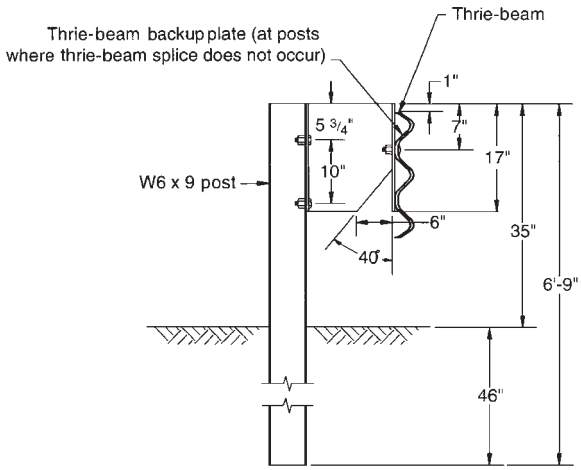

AASHTO Designation:	**None**
Post Type:	W6 x 9 steel or 6 in x 8 in wood
Offset Block:	M14 x 18 steel
Post Spacing:	6 ft-3 in
Beam Type:	12-gage thrie-beam
Nominal Barrier Height:	34 in
Maximum Dynamic Deflection:	Approximately 3 ft for a 20,000-pound school bus (56 mph, 15° impact angle)

Remarks: Modified thrie-beam was first installed in Rhode Island, Colorado, Nebraska, and Michigan as an experimental barrier. Since that time, it has been reclassified as an operational system, requiring virtually no repair for shallow-angle hits. This barrier can accommodate vehicles ranging in size from 1700-lb subcompacts to a 33,000-lb intercity bus.

FIGURE 6.19 Modified thrie-beam roadside barrier. Conversions: 1 in = 25.4 mm, 1 ft = 0.305 m. (*From* Roadside Design Guide, *AASHTO, Washington, D.C., 2002 and 2006, with permission*)

version shown in Fig. 6.21*a* is 90 in (2290 mm) high; also, it is sloped on both faces. It contains impacting tractor-trailers but has not completely eliminated rollovers. Successfully testing to TL-6 has been reported. The version shown in Fig. 6.21*b* is 64 in (1630 mm) high. Apparently effective, it is buttressed by an earth berm on the back side and topped with a W-beam barrier. Constant slope and vertical wall barriers have also been successfully tested (Art. 6.9.1).

The *stone masonry wall system* (Fig. 6.22), with a reinforced concrete core and a facing of stone and mortar, offers another aesthetic alternative for parks and similar applications. This barrier meets TL-3. Alternative systems with precast units are also available.

6.6 SELECTION OF ROADSIDE BARRIERS

In most cases, the selection of a roadside barrier should be made on the basis of the system that will provide the required degree of shielding at the lowest cost. The lowest cost should be based on a life-cycle cost analysis, considering initial and maintenance costs

www.EngineeringEBooksPdf.com

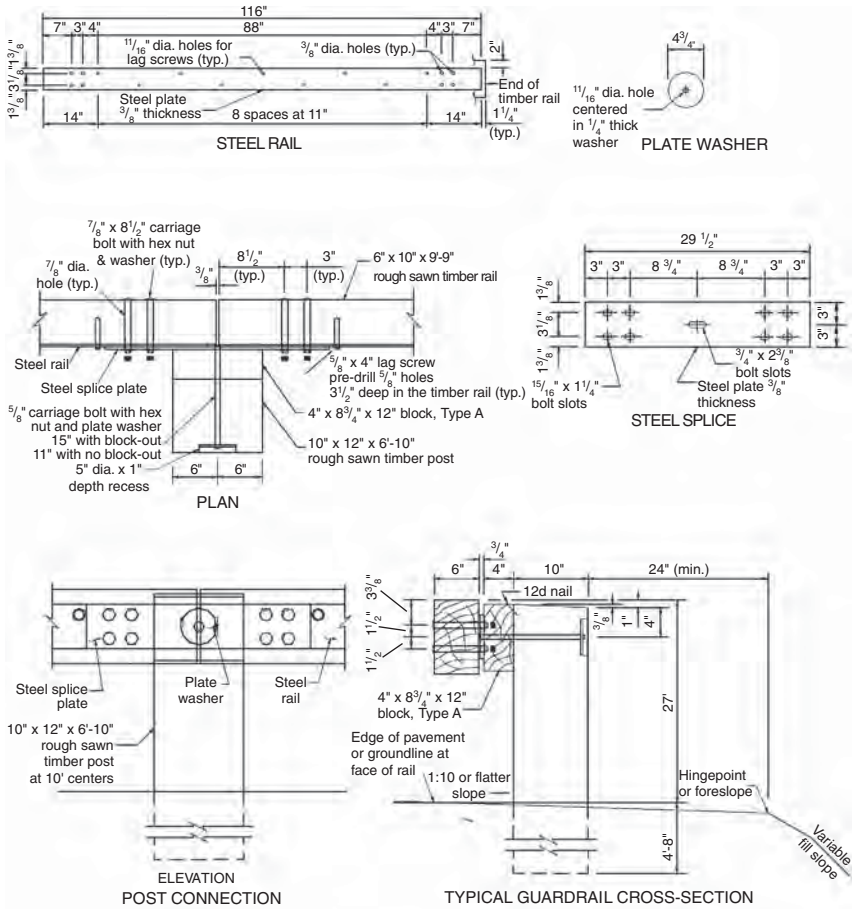

AASHTO designation:	**None**
Post Type:	10 in x 12 in x 7 in rough-sawn timber
Beam Type:	6 in x 10 in timber with steel plate backing
Nominal Barrier Height:	27 in

FIGURE 6.20 Steel-backed wood-rail roadside barrier. Conversions: 1 in = 25.4 mm, 1 ft = 0.305 m. (*From* Roadside Design Guide, *AASHTO, Washington, D.C., 2002 and 2006, with permission*)

and project life. Factors that should be considered in making the selection are summarized in Table 6.3. The most important decision is the performance level required. In general, TL-2 or TL-3 barriers are satisfactory for most locations, but higher-performance barriers (TL-4 or greater) should be considered for locations with poor geometries, high traffic volumes and speeds, and concentrations of heavy truck traffic. The deflection characteristics of the barrier must be considered in relation to the available space. Some systems can be modified to decrease deflections by decreasing post spacing or increasing the

www.EngineeringEBooksPdf.com

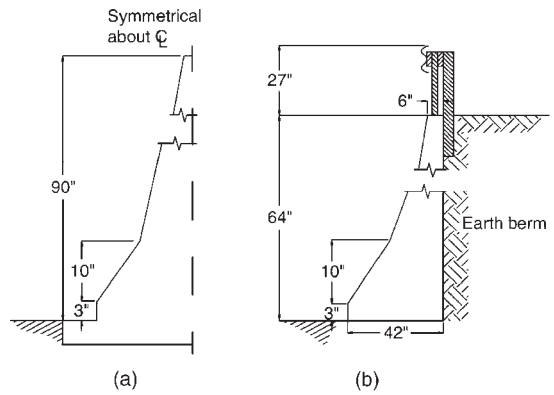

AASHTO Designation: MB5

The 32-in-high concrete safety shape was initially installed primarily as a median barrier, but has become commonly used as both a bridge railing and a roadside barrier. Most of these barriers use the standard New Jersey shape; any extension in barrier height occurs above the slope break point. Several states extend the upper stem to serve as a maintenance-free glare screen. The two designs shown above are the extreme heights to which roadside barriers have been constructed—both along ramps with a history of truck accidents.

FIGURE 6.21 Variations of concrete safety shape for roadside barrier in severe applications showing (*a*) symmetrical form and (*b*) earth-backed installation. Conversion: 1 in = 25.4 mm. (*From* Roadside Design Guide, *AASHTO, Washington, D.C., 2002 and 2006, with permission*)

number of rails. A computer program, Analysis of Roadside Design (NARD), is available for predicting maximum deflections for blocked-out W-beam and thrie-beam systems with different post spacings and single or double rails. On all systems, data on impact performance and maintenance costs should be tabulated and made available to provide better information for the selection of roadside barriers.

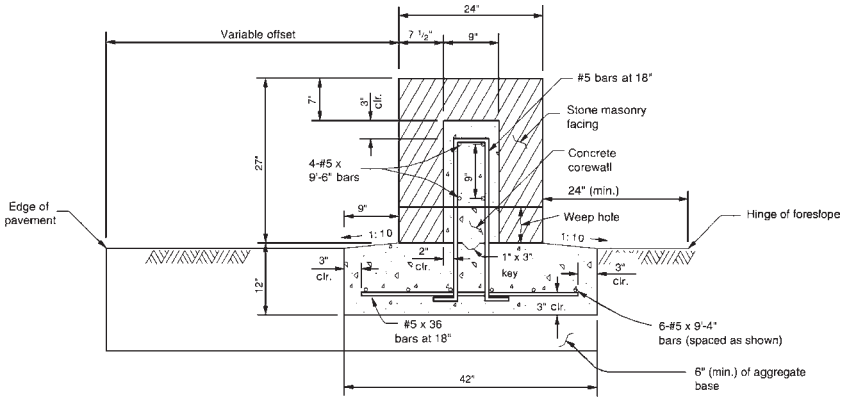

AASHTO Designation: None

This barrier consists of a reinforced concrete core faced with stone rubble masonry. Designed for use in scenic areas, its natural appearance and low height combine to make it an effective barrier for use on parkways and similar facilities.

FIGURE 6.22 Stone masonry roadside barrier. Conversions: 1 in = 25.4 mm, 1 ft = 0.305 m. (*From* Roadside Design Guide, *AASHTO, Washington, D.C., 2002 and 2006, with permission*)

www.EngineeringEBooksPdf.com

TABLE 6.3 Selection Criteria for Roadside Barriers

Criterion	Comments
Performance capability	Barrier must be structurally able to contain and redirect design vehicle.
Deflection	Expected deflection of barrier should not exceed available room to deflect.
Site conditions	Slope approaching the barrier, and distance from traveled way, may preclude use of some barrier types.
Compatibility	Barrier must be compatible with planned end anchor and capable of transition to other barrier systems (such as bridge railing).
Cost	Standard barrier systems are relatively consistent in cost, but high-performance railing can cost significantly more.
Maintenance	
Routine	Few systems require a significant amount of routine maintenance.
Collision	Generally, flexible or semirigid systems require significantly more maintenance after a collision than rigid or high-performance railings.
Materials storage	The fewer different systems used, the fewer inventory items or the less storage space required.
Simplicity	Simpler designs, besides costing less, are more likely to be reconstructed properly by field personnel.
Aesthetics	Occasionally, barrier aesthetics is an important consideration in selection.
Field experience	The performance and maintenance requirements of existing systems should be monitored to identify problems that could be lessened or eliminated by using a different barrier type.

Source: From *Roadside Design Guide*, AASHTO, Washington, D.C., 2002 and 2006, with permission.

6.7 PLACEMENT OF ROADSIDE BARRIERS

Factors to consider in specifying the exact layout of a barrier at a given location include lateral offset from the edge of the traveled way, terrain effects, flare rate, and length of need. (See also Art. 6.10.)

6.7.1 Lateral Offset

Roadside barriers should generally be placed as far from the traveled way as conditions permit, to allow motorists the best chance of regaining control and to provide better sight distance. It is desirable to maintain a uniform clearance between traffic and roadside features such as bridge railings, retaining walls, and roadside barriers. The distance beyond which a roadside object will not be perceived as an obstacle and

www.EngineeringEBooksPdf.com

cause a motorist to reduce speed or change position is known as the *shy line offset.* According to the AASHTO *Roadside Guide,* this distance varies with design speed as follows:

Design speed		Shy line offset	
mi/h	km/h	ft	m
80	130	12.1	3.7
75	120	10.5	3.2
70	110	9.2	2.8
60	100	7.9	2.4
55	90	7.2	2.2
50	80	6.6	2.0
45	70	5.6	1.7
40	60	4.6	1.4
30	50	3.6	1.1

Place the barrier beyond the shy line offset when possible, particularly for short, isolated installations. Uniform alignment reduces the possibility of snagging. Proper transition where a barrier connects to other features is essential. Short gaps between barriers should be avoided; make the barriers continuous instead. The barrier-to-obstacle distance must be greater than the expected dynamic deflection of the barrier. Where shielding an embankment, the distance from the barrier to the beginning of the down slope should generally be at least 2 ft (0.6 m), but this may vary with local conditions for soil support of the post.

6.7.2 Terrain Effects

Ideally, at the moment of impact, a vehicle should have all wheels on the ground and the suspension system in a neutral state. Thus, terrain conditions between the traveled way and the barrier are very important. For example, curbs should be avoided and should be no higher than 4 in (100 mm) if used. In many cases, they can be located behind the barrier. Barriers are usually tested on level terrain. If installed on slopes steeper than 1:10, vehicles may go over standard barriers or impact them too low, and thus not perform as anticipated.

6.7.3 Flare Rate

Roadside barriers must be flared (must have variable offset from the traveled way) to locate the barrier terminal back from the roadway and thus to minimize drivers' reaction to a perceived hazard near the road when approaching a bridge parapet or railing, for example. However, the greater the flare rate, the greater the potential impact angle and the severity of an accident if the barrier is hit. Also, the chance that a vehicle would be redirected across the roadway increases. Maximum flare rates depend on design speed, barrier type, and location relative to the shy line as shown in Table 6.4. Adjustment to a flatter rate is sometimes made to avoid extensive grading.

www.EngineeringEBooksPdf.com

TABLE 6.4 Suggested Maximum Flare Rates for Roadside Barriers

Design speed, mi/h (km/h)	Flare rate for barrier inside shy line	Flare rate for barrier beyond shy line: Rigid systems	Flare rate for barrier beyond shy line: Semirigid systems
70 (110)	30:1	20:1	15:1
60 (100)	26:1	18:1	14:1
55 (90)	24:1	16:1	12:1
50 (80)	21:1	14:1	11:1
45 (70)	18:1	12:1	10:1
40 (60)	16:1	10:1	8:1
30 (50)	13:1	8:1	7:1

Source: From *Roadside Design Guide*, *AASHTO,* Washington, D.C., 2002 and 2006, with permission.

6.7.4 Length of Need

The total length of a longitudinal barrier needed to shield an area of concern is referred to as the *length of need.* Figure 6.23 illustrates the variables that must be considered, particularly the *runout length* L_R and the *lateral extent of the area of concern* L_A. The runout length is the theoretical distance needed for a vehicle that has left the road to come to a stop, measured as shown. Suggested values are given in Table 6.5 in terms of the traffic volume and the design speed. The lateral extent of the area of concern is the distance from the edge of the traveled way to the far side of the fixed object, or the outside edge of the clear zone L_C of an embankment or fixed object that extends past the clear zone. After major variables are established, the length of the barrier will then depend on the tangent length L_1, the distance from the traveled way L_2, and the flare rate *a:b.* If a semirigid railing is connected to a rigid barrier, the tangent length should be at least as long as the transition section to reduce pocketing and increase likelihood of redirection. After variables have been selected, the required

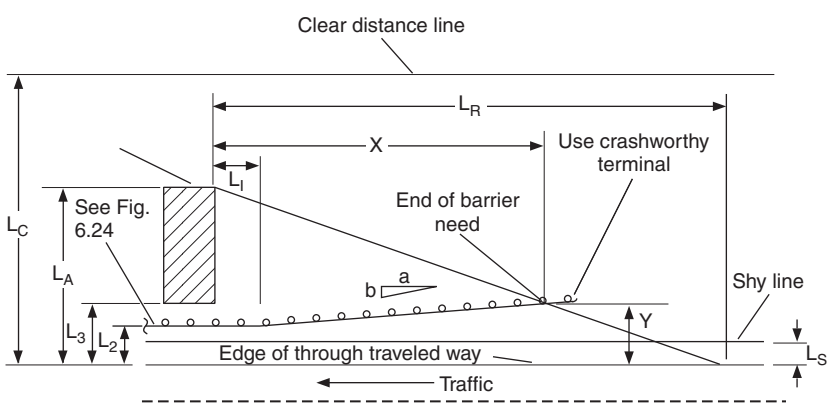

FIGURE 6.23 Layout of barrier approach. (*From* Roadside Design Guide, *AASHTO, Washington, D.C., 2002 and 2006, with permission*)

www.EngineeringEBooksPdf.com

TABLE 6.5 Suggested Runout Lengths for Barrier Design

Design speed, mi/h (km/h)	Runout length L_R for indicated traffic volume, ft (m)			
	>6000 ADT	6000–2000 ADT	2000–800 ADT	<800 ADT
70 (110)	475 (145)	445 (135)	395 (120)	360 (110)
60 (100)	425 (130)	400 (120)	345 (105)	330 (100)
55 (90)	360 (110)	345 (105)	315 (95)	280 (85)
50 (80)	330 (100)	300 (90)	260 (80)	245 (75)
45 (70)	260 (80)	245 (75)	215 (65)	200 (60)
40 (60)	230 (70)	200 (60)	180 (55)	165 (50)
30 (50)	165 (50)	165 (50)	150 (45)	130 (40)

Source: From *Roadside Design Guide*, AASHTO, Washington, D.C., 2002 and 2006, with permission.

length of need X in advance of the area of concern, for essentially straight sections of roadway, can be calculated from

$$X = \frac{L_A + (b/a)(L_1) - L_2}{(b/a) + (L_A/L_R)} \tag{6.1}$$

The lateral offset Y from the edge of the traveled way to the beginning of the length of need is

$$Y = L_A - \frac{L_A}{L_R} X \tag{6.2}$$

The amount of rail installed should be a multiple of 12.5 or 25 ft (3.8 or 7.6 m), because metal-beam barriers are furnished in these lengths. A crashworthy end treatment must be added if the end treatment is located within the clear zone or in a location where it is likely to be struck. If the end treatment permits vehicle penetration, it must be extended upstream to preclude a vehicle from penetrating and striking the shielded feature.

Figure 6.24 shows the definition of variables of an approach barrier for opposing traffic. In this case, lateral dimensions are measured from the edge of the traveled way of the opposing traffic. This would be the centerline for a two-lane roadway or the edge of the driving lane next to the median for a two-way divided roadway. There are three ranges of clear zone width L_C to consider for an approach barrier for opposing traffic:

- If the barrier is beyond the clear zone, no additional barrier or crashworthy end treatment is required.
- If the barrier is within the clear zone but the area of concern is beyond it, no additional barrier is required but a crashworthy end treatment should be used.
- If the area of concern extends well beyond the clear zone, consider shielding only that portion which lies within the clear zone (set L_A equal to L_C).

The lateral placement of the approach rail should satisfy the criterion for embankment slopes. If steeper than 1:10, consider flattening the slope or decreasing the flare rate so the embankment criterion is not violated.

www.EngineeringEBooksPdf.com

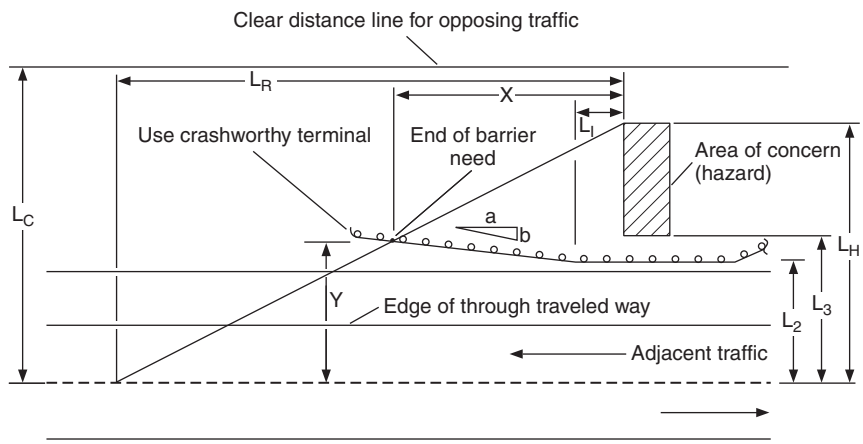

FIGURE 6.24 Layout of barrier approach. (*From* Roadside Design Guide, *AASHTO, Washington, D.C., 2002 and 2006, with permission*)

6.8 UPGRADING ROADSIDE BARRIER SYSTEMS

Table 6.6 provides a checklist that can be used to review existing barrier installations and determine adequacy for either structural or functional (design or placement) causes. Factors to be considered in determining the scope and extent of upgrading include the nature and extent of the deficiency, past accident history, and the cost-effectiveness of the recommended improvement. Remember to always consider the cost-effectiveness of eliminating or relocating the shielded feature.

6.9 MEDIAN BARRIERS

Longitudinal median barriers are used to separate opposing traffic on divided highways, to separate local and through traffic, or to separate traffic in designated lanes. Median barriers designed to redirect vehicles striking from either side require some different considerations from those for roadside barriers. However, performance requirements are the same as given in NCHRP 350 for roadside barriers.

Median barriers should be installed only if the consequences of striking the barrier are less severe than those of striking the feature in question. Figure 6.25 provides suggested warrants for median barriers on high-speed fully controlled-access roadways with relatively flat, traversable medians. The median width and the traffic volume dictate the need. There has been a trend to use median barriers for somewhat wider median widths than in the past as a result of studies of cross-median crash history. Site-specific data should also be considered. Also, special consideration should be given to barrier needs for medians separating roadways at different elevations.

The information presented in Arts. 6.6, 6.7, and 6.8 on selection, placement, and upgrading of roadside barriers applies generally to median barriers as well. Some additional information on transitions and placement follows in Arts. 6.9.2 and 6.10. End treatments are discussed in Art. 6.12.

www.EngineeringEBooksPdf.com

TABLE 6.6 Roadside Barrier Inspection Checklist

I. Structural adequacy*
   A. Longitudinal section
      1. Standard barrier design†
      2. Adequate post spacing
      3. Rail element blocked out on strong-post system
      4. Adequate splices in rail element
   B. Terminal
      1. Standard terminal design†
      2. Adequate anchorage strength
   C. Transition section
      1. Standard transition design†
      2. Adequate anchorage strength
      3. Adequate stiffening in advance of rigid system
      4. Adequate blockout and/or rubrail

II. Functional adequacy‡
   A. Longitudinal section
      1. Adequate length to shield area of concern
      2. Proper height of rail§
      3. Proper flare rate
      4. Barrier-to-object distance exceeds barrier deflection distance
      5. Placement behind curb consistent with vehicle trajectory data
      6. Placement on flat slopes (1:10) or on slopes up to 1:6 consistent with vehicle trajectory data
      7. Beam backup plates present on steel strong-post system
   B. Terminal
      1. Adequate clear recovery area behind yielding terminal
      2. Adequate offset of terminal end

*Structural adequacy is inherent in the barrier itself, rather than resulting from design, placement, or maintenance.

†Standard systems or elements are those which are currently an approved agency standard or have been successfully crash tested. Certain barriers that fall outside these categories may be left in place depending on the characteristics of the barrier and the results of an engineering analysis of the site.

‡Functional adequacy results from barrier design or placement and is essential for barrier effectiveness.

§Generally, a 3-in (75-mm) variation from the nominal height is acceptable.

Source: From *Roadside Design Guide*, AASHTO, Washington, D.C., 2002 and 2006, with permission.

6.9.1 Characteristics of Median Barriers

Like roadside barriers, median barriers can be classified as flexible, semirigid, or rigid as indicated in Table 6.7. Figures 6.26 through 6.35 show details of these various types of median barriers and factors to be considered in selection and application. Additional comments on several of the systems follow. In many of their characteristics they are similar to their roadside barrier counterparts.

Typical three-strand cable systems (Fig. 6.26) should be used only if there is adequate deflection distance, about 12 ft (3.5 m) in each direction. Performance is sensitive to mounting height. Proper end anchorage is critical. They are not well suited for areas hit frequently, on sharp curves, and on facilities with high truck volumes.

www.EngineeringEBooksPdf.com

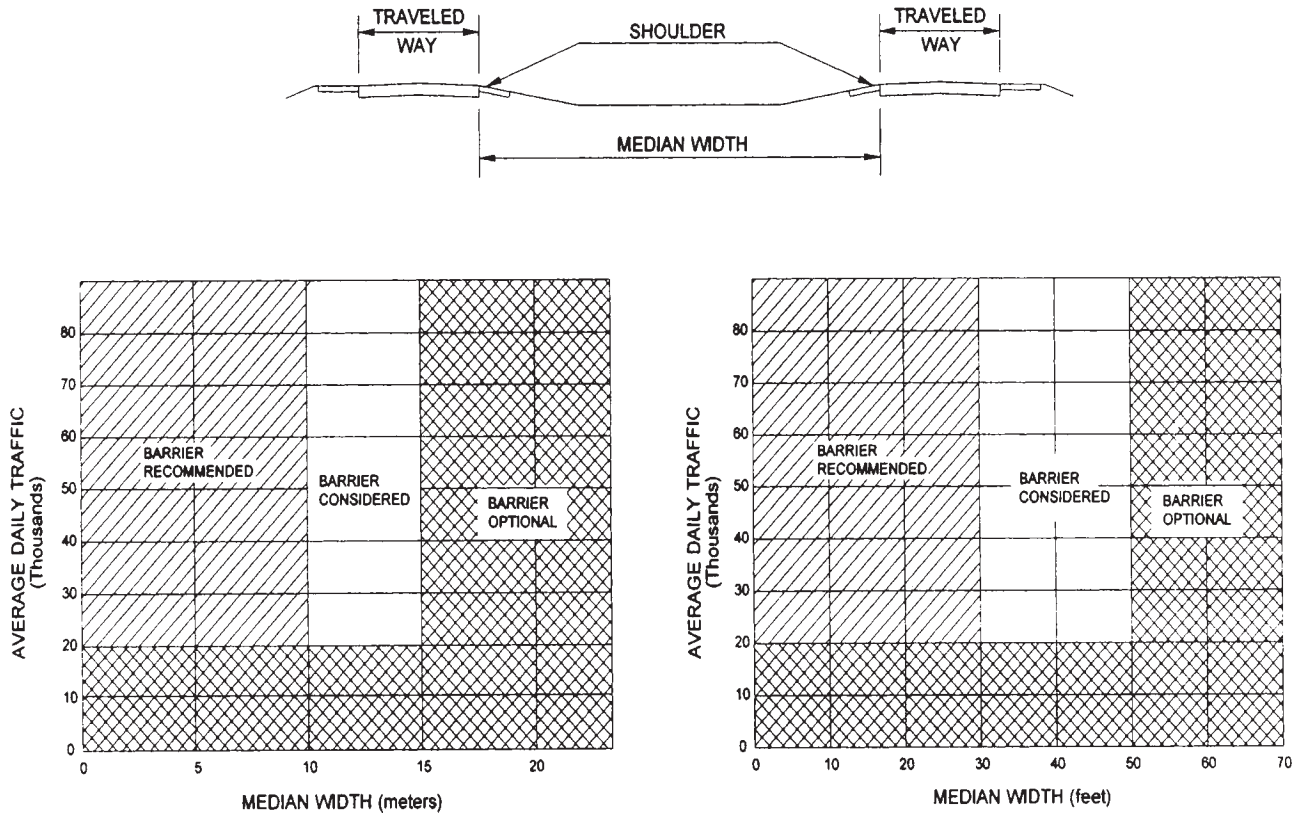

FIGURE 6.25 Median barrier guidelines for high-speed, fully controlled-access roadways. (*From* Roadside Design Guide, *AASHTO, Washington, D.C., 2002 and 2006, with permission*)

www.EngineeringEBooksPdf.com

TABLE 6.7 Classification of Median Barriers and Approved Test Levels

Barrier system	Test level
Flexible systems	
Three-strand cable (weak-post)	TL-3
High-tension cable (weak-post)	TL-3
W-beam guardrail (weak-post)	TL-2
Semirigid systems	
Box beam (weak-post)	TL-3
Blocked-out W-beam (strong-post)	
Steel or wood post with wood or plastic block	TL-3
Steel post with steel block	TL-2
Blocked-out thrie-beam (strong-post)	
Wood or steel post with wood or plastic block	TL-3
Modified thrie-beam	TL-4
Rigid systems	
Concrete barrier	
New Jersey shape	
32 in (810 mm) tall	TL-4
42 in (1070 mm) tall	TL-5
F-shape	
32 in (810 mm) tall	TL-4
42 in (1070 mm) tall	TL-5
Single-slope	
32 in (810 mm) tall	TL-4
42 in (1070 mm) tall	TL-5
Vertical wall	
32 in (810 mm) tall	TL-4
42 in (1070 mm) tall	TL-5
Quickchange® movable barrier (including SRTS and CRTS)*	TL-3

*SRTS refers to the steel reactive tension system; CRTS refers to the concrete reactive tension system.

Source: From *Roadside Design Guide,* AASHTO, Washington, D.C., 2002 and 2006, with permission.

Deflection can be reduced by decreasing post pacing. The system shown meets the TL-3 requirements.

High-tension cable systems are installed with significantly greater cable tension. They reduce deflections to 6.6 to 9.2 ft (2 to 2.8 m) and often show less damage after impact. Several proprietary systems have been accepted by the FHWA.

The *W-beam (weak-post) system* (Fig. 6.27) is sensitive to mounting. Proper end anchorage is essential. It is not well suited where terrain irregularities exist or where frost heave or erosion is likely to alter the mounting height by more than 2 in (50 mm). However, it is suitable for relatively flat, traversable medians without curbs or ditches that could affect vehicle trajectory. This is a Tl-2 system.

The *box-beam* (*weak-post*) median barrier (Fig. 6.28) is a TL-3 system, most suitable for traversable medians with no significant irregularities. Posts have to be repaired after most hits to maintain correct beam height, so it should not be used in areas where it is likely to be frequently hit.

www.EngineeringEBooksPdf.com

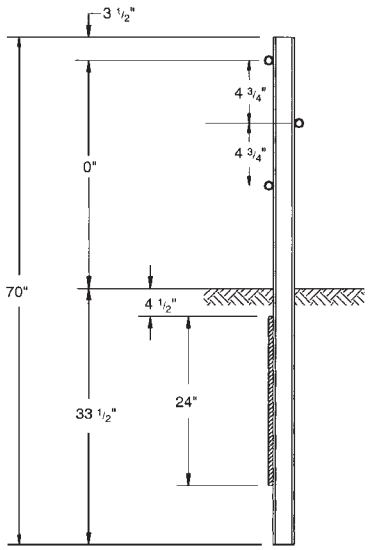

AASHTO Designation:	**None (the former single-strand cable "MBI" is obsolete)**
Test Level:	TL-3
Post Type:	S3 x 5.7 steel
Post Spacing:	16 ft
Beam Type:	3/4-in-dia. steel cable
Nominal Barrier Height:	30 in
Maximum Dynamic Deflection:	11 ft-6 in

Remarks: Because of the high dynamic deflection for cable systems, they are not recommended for use in medians narrower than approximately 23 ft, nor in medians which contain rigid objects. The extensive damage done during moderate to severe impacts leaves a significant length of barrier inoperative until repairs can be made. Cable median barrier systems are recommended for use on irregular terrain and on wider medians where the need is only to prevent infrequent, potentially catastrophic cross-median crashes. For proper performance it is essential that this system be installed and maintained at the correct mounting height. This system is similar to the 3-strand cable roadside barrier, except that one of the cables is mounted on the opposite side of the post from the other two.

FIGURE 6.26 Three-cable median barrier. Conversions: 1 in = 25.4 mm, 1 ft = 0.305 m. (*From* Roadside Design Guide, *AASHTO, Washington, D.C., 2002 and 2004, with permission*)

The *blocked-out W-beam* (*strong-post*) median barrier meets TL-3 or TL-2, depending upon the post type and blocking used. Figure 6.29 shows several variations of the system. Mounting heights of 30 in (760 mm) are sometimes specified but have not been tested. A separate rub rail (usually a steel channel or tube) has sometimes been added to minimize postsnagging problems with the higher mounting height.

The *blocked-out thrie-beam* (*strong-post*) median barrier meets TL-3 and the *modified thrie-beam* meets TL-4. The post type and blocking used affect the rating (Fig. 6.30). The thrie-beam is capable of accommodating a larger range of vehicle sizes than the W-beam because of its greater beam depth. Also, the deeper beam eliminates the need for a rubrail.

The *concrete safety shape* (Fig. 6.31) is the most common rigid median barrier because of low cost, effective performance, and low maintenance. Approved shapes include the *New Jersey* and *F-shaped barriers,* the *single-slope barrier,* and the *vertical wall barrier.*

www.EngineeringEBooksPdf.com

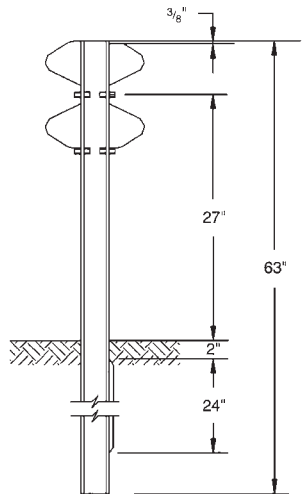

AASHTO Designation:	**SGM02**
Test Level:	TL-2
Post Type:	S3 x 5.7
Post Spacing:	12 ft-6 in
Beam Type:	Two steel W-sections, 12 gage
Offset Brackets:	None
Nominal Barrier Height:	30–33 in
Maximum Dynamic Deflection:	Approximately 7 ft

Remarks: This barrier system is suitable for wide, flat medians where sufficient space is available to accommodate deflections. In order to place rigid objects within the median, the SGM02 must be divided into parallel SGR02 barriers with the objects centered in a 23-ft-plus gap or be transitioned to a semirigid system.

FIGURE 6.27 W-beam (weak-post) median barrier. Conversions: 1 in = 25.4 mm, 1 ft = 0.305 m. (*From* Roadside Design Guide, *AASHTO, Washington, D.C., 2002 and 2006, with permission*)

When adequately designed and reinforced, all of these meet the requirements of TL-4 at the standard height of 810 mm (32 in) and TL-5 at heights of 1070 mm (42 in) and higher. The New Jersey and F-shape barriers (Fig. 6.31), commonly referred to as *safety shapes,* differ in the height of the break point (change of slope of the face). The F-shape may perform better with regard to vehicle roll when subjected to small vehicle impact. When pavement overlays exceed 3 in (75 mm), the height of the concrete above the break point must be increased to maintain an adequate height. Figures 6.32 and 6.33 show tall-wall safety-shape barriers (reinforced and nonreinforced concrete) that have been used successfully. The single-slope barrier (Fig. 6.34) offers an advantage over others in that the pavement next to it can be overlaid several times, reducing the height to 42 in (1070 mm), without affecting performance. Foundation requirements do not appear critical, and there are many variations. Concrete median barriers can be slipformed, precast, or cast in place. A sand-filled metal version has been used in several states on an experimental basis.

Two important factors for safety-shape concrete barriers should be noted. Although the barrier does not deflect when hit, passenger vehicles may become airborne and even reach the top in high-angle, high-speed impacts. Fixed objects on top of the barrier such as luminaire supports can cause snagging. Also, even for shallow-angle

www.EngineeringEBooksPdf.com

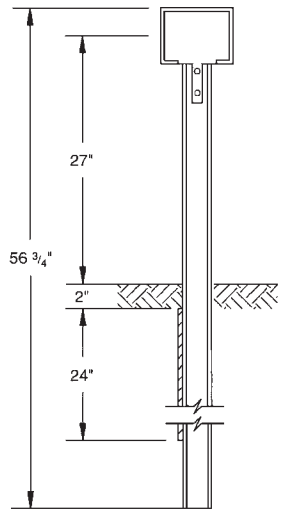

AASHTO Designation:	**SGM03**
Test Level:	TL-3
Post Type:	S3 x 5.7
Post Spacing:	6 ft
Beam Type:	8 in x 6 in x 1/4 in steel tube
Offset Brackets:	None
Mountings:	Steel paddles
Nominal Barrier Height:	30 in
Maximum Dynamic Deflection:	5 ft-6 in

Remarks: This barrier system is suitable for both wide and narrow medians and locations where the terrain is moderately irregular. Even moderate vehicle impacts cause a large number of posts to be damaged. Temporary supports may be used to maintain beam height until posts are replaced.

FIGURE 6.28 Box-beam median barrier. Conversions: 1 in = 25.4 mm, 1 ft = 0.305 m. (*From* Roadside Design Guide, *AASHTO, Washington, D.C., 2002 and 2006, with permission*)

impacts, the roll angle of a high-center-of-gravity vehicle may be great enough to permit contact of the cargo box with objects on or just behind the barrier. Taller barriers offer improved characteristics in this regard.

The *movable concrete barrier* is an F-shaped barrier furnished in lengths of 37 in (940 mm) and arranged in a chain fashion with ends joined by pins. The proprietary Quickchange® system is shown in Fig. 6.35. The T segment at the top facilitates lifting. The system is often used in construction zones where traffic lanes are opened and closed frequently. Various other systems are available.

6.9.2 Median Barrier End Treatments

Median barriers, similar to roadside barriers, should be introduced and terminated with safety in mind. Openings or breaks in barriers should be kept to a minimum to negate the need for end treatments. Where openings are required, shield barrier ends or, if the median

www.EngineeringEBooksPdf.com

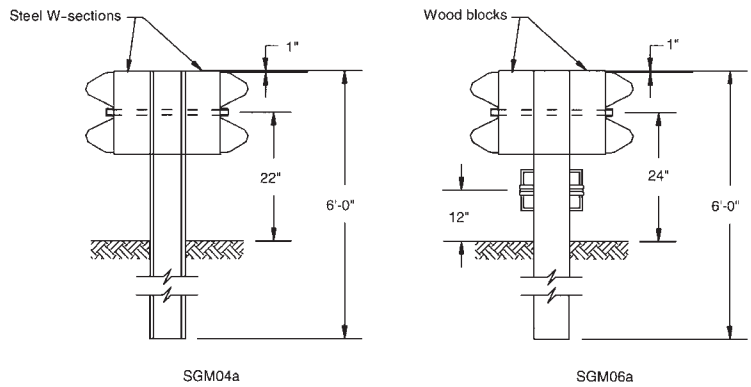

AASHTO Designation:	SGM04a	SGM04b	SGM04a (with non-steel blocks)
Test Level:	TL-2	TL-3	TL-3
Post Type:	W6 x 9	8 in x 8 in timber*	W6 x 9
Post Spacing:	6 ft-3 in	6 ft-3 in	6 ft-3 in
Beam Type:	Two steel W-sections	Two steel W-sections	Two steel W-sections
Offset Brackets:	Two W6 x 9	Two routed 8 in x 8 in x 14 in timber or plastic	Two 6 in x 8 in x 14 in timber or plastic
Nominal Barrier Height:	27 in	27 in	27 in
Maximum Dynamic Deflection:	Approximately 2 ft	Approximately 2 ft	Approximately 2 ft

AASHTO Designation:	SGM06a	SGM06b
Test Level:	TL-3	TL-3
Post Type:	W6 x 9	6 in x 8 in timber*
Post Spacing:	6 ft-3 in	6 ft-3 in
Beam Type:	Two steel W-sections	Two steel W-sections
Offset Brackets:	Two routed 6 in x 8 in x 14 in timber or plastic	Two routed 6 in x 8 in x 14 in timber or plastic
Nominal Barrier Height:	30 in	30 in
Maximum Dynamic Deflection:	Approximately 2 ft	Approximately 2 ft

Remarks: These systems are semirigid and are satisfactory for use in narrow medians. After typical impacts, the system remains serviceable. Some states use a W-section as a rubrail, centered at 10 in above grade. This modification is appropriate for both the SGM06a and b, and a higher SGM04a and b. By dividing any of these systems into parallel roadside barriers, assuming adequate deflection distance, fixed objects in the median can be effectively shielded.

*6 in x 8 in post and blockout is acceptable

FIGURE 6.29 W-beam (strong-post) median barrier. Conversions: 1 in = 25.4 mm, 1 ft = 0.305 m. (*From* Roadside Design Guide, *AASHTO, Washington, D.C., 2002 and 2006, with permission*)

is sufficiently wide, flare or offset the barrier. In locations where impacts are likely, end treatments must be crashworthy. Also, they should safely redirect vehicles impacting from the rear, where hits from opposing traffic are likely. Many proprietary devices are available for terminals. Appropriate end terminals for W-beam barriers include the CAT or Brakemaster. For concrete barriers consider the ADIEM, the TRACC, the QuadGuard™, and the REACT-350®. Sand barriers can also be used to shield median barrier ends, particularly where medians are wide and the likelihood of impacts from opposing traffic is low.

www.EngineeringEBooksPdf.com

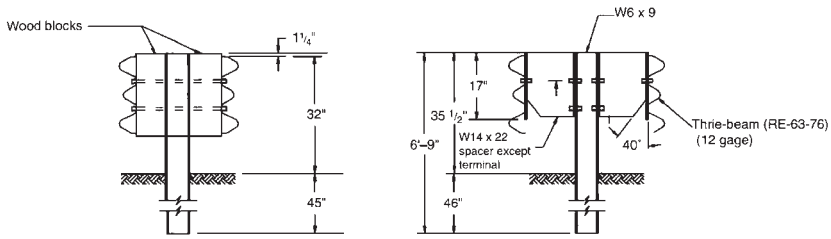

SGM09a SGM09b

AASHTO Designation:	SGM09a (with nonsteel blocks)	SGM09b	SGM09c
Test Level:	TL-3	TL-4	TL-3
Post Type:	W6 x 9	W6 x 9	6 in x 8 in timber
Post Spacing:	6 ft-3 in	6 ft-3 in	6 ft-3 in
Beam Type:	Two thrie-beams	Two thrie-beams	Two thrie-beams
Offset Brackets:	Routed 6 in x 8 in timber or plastic	M14 in x 17.2 in steel	6 in x 8 in timber or plastic
Nominal Barrier Height:	32 in	32 in	32 in
Maximum Dynamic Deflection:	Approximately 20 in	Approximately 20 in	Approximately 20 in

Remarks: SGM09 systems are satisfactory for use in narrow medians. Normal impacts do little damage to the rail. Under severe impact conditions, the rail of an SGM09b system remains upright and has the capability to redirect 40,000-lb vehicles impacting at 50 mph and at an angle of 15 degrees.

FIGURE 6.30 Thrie-beam (strong-post) median barrier. Conversions: 1 in = 25.4 mm, 1 ft = 0.305 m. (*From* Roadside Design Guide, *AASHTO, Washington, D.C., 2002 and 2006, with permission*)

6.9.3 Median Barrier Transitions

Transition sections are used between adjoining median barriers having significantly different deflection characteristics, between a semirigid median barrier and a rigid barrier (such as a bridge rail), and in similar situations. The transition sections should provide impact performance similar to standard sections, and emphasis should be placed on designs to avoiding vehicle snagging. Structural details of special importance include the following:

- Rail splices should develop the tensile strength of the weaker rail.
- Use a flared or sloped connection if the connection could snag an opposite-direction vehicle. Use a standard terminal connector to attach a W-beam or thrie-beam rail to a rigid bridge railing or parapet, or provide a recessed area in the parapet wall to receive the rail.
- In cases such as a strong-post W-beam transition to the concrete safety shape, use a blockout design and consider adding a rub rail or using a thrie-beam instead.
- Use a transition length 10 to 12 times the difference in lateral deflection of the two systems under consideration.
- Increase stiffness gradually from the weaker to the stronger system by means such as decreasing the post spacing, increasing the post size, and using nested sections of W-beam or thrie-beam.

www.EngineeringEBooksPdf.com

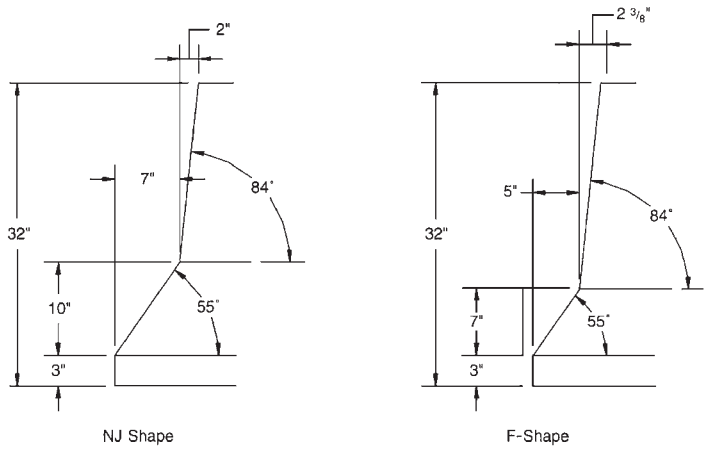

AASHTO Designation:	**SGM11a**	**SGM10a**
Test Level:	TL-4	TL-4
Nominal Barrier Height:	32 in	32 in
Maximum Dynamic Deflection*:	0	0

Remarks: The concrete safety shapes are the only operational rigid barriers. The lower-sloped face redirects vehicles without damage under low-impact conditions. During moderate to severe impacts, some energy is dissipated when the vehicle is lifted off the pavement. The loss of tire contact with the pavement also aids redirection.

The details of the shape are critical. The distance from the pavement to the break between the upper and lower slopes should be kept at 13 in or below. Barrier performance under moderate to severe impact conditions is not significantly affected by overlays on the lower-sloped face. The overall height of the barrier, however, needs to be maintained at a minimum of 29 in.

The safety-shape barrier is suitable for narrow medians. Both faces can be flared away from the centerline to provide room for rigid objects to be installed in the medians.

*Very severe hits may destroy the barrier. Reinforcing is recommended to prevent shattering of concrete where the top of the barrier has a width less than 1 ft.

FIGURE 6.31 Concrete safety-shape median barrier. Conversion: 1 in = 25.4 mm. (*From* Roadside Design Guide, *AASHTO, Washington, D.C., 2002 and 2004, with permission*)

6.10 PLACEMENT OF BARRIERS ON SLOPED MEDIANS

Either roadside barriers or median barriers may be appropriate for sloped medians, depending on conditions. If a relatively flat median (slope of 1:10 or flatter) free of rigid objects is available, a median barrier can be placed at the center. When such desirable conditions are not available, some additional guidelines should be considered. Figure 6.36 shows three basic types of median sections. Section I (illustrations 1–3) represents a depressed median or one with a ditch; section II (illustrations 4–6) represents a stepped median or a median that separates traveled ways with significant differences in elevation; and section III (illustration 7) applies to a raised median.

Section I. Check to see if the slopes warrant a barrier. If both slopes require shielding (illustration 1), place a *roadside barrier* near the shoulder on each side of the

www.EngineeringEBooksPdf.com

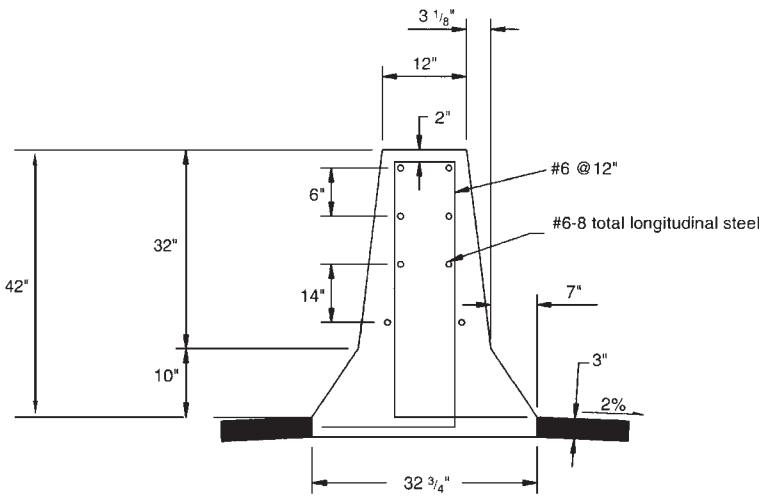

AASHTO Designation:	**SGM11b**
Test Level:	TL-5
Nominal Barrier Height:	42 in
Maximum Dynamic Deflection:	0

Remarks: This tall-wall concrete safety-shape barrier is used by the New Jersey Turnpike Authority.

FIGURE 6.32 Tall-wall concrete safety-shape (reinforced) median barrier. Conversion: 1 in = 25.4 mm. (*From* Roadside Design Guide, *AASHTO, Washington, D.C., 2002 and 2006, with permission*)

median. If only one slope must be shielded, place a *median barrier* near the shoulder on that side; use a rigid or semirigid barrier, and install a rub rail on the ditch side of the barrier to prevent snagging of a vehicle that has crossed the ditch. If neither slope requires shielding but one is steeper than 1:10 (illustration 2), place a rigid or semirigid median barrier on the side with the steeper slope when warranted. If both slopes are relatively flat (illustration 3), place a median barrier (any type with dynamic deflection not greater than half median width) at or near the center of the median if vehicle override is not likely.

Section II. If the embankment slope is steeper than 1:10 but traversable (illustration 4), place a median barrier near the shoulder on the high side of the slope. If the slope is not traversable (such as a rough rock cut, illustration 5), place a *roadside barrier* at the top and bottom of the slope. If a retaining wall is located at the bottom of the slope, contour the base of the wall to the exterior shape of a concrete safety shape. If the slope is flatter than 1:10 (illustration 6), place a median barrier near the center.

Section III. If the median is sufficiently high and wide (illustration 7), vehicles may be redirected without a barrier. If the slopes are relatively flat and traversable, place a semirigid median barrier at the apex. If the slopes are not traversable, place a *roadside barrier* on either side.

When a median barrier is warranted, it is best to use the same barrier throughout the length of need. In cases where a roadside barrier is required on both sides of the median

www.EngineeringEBooksPdf.com

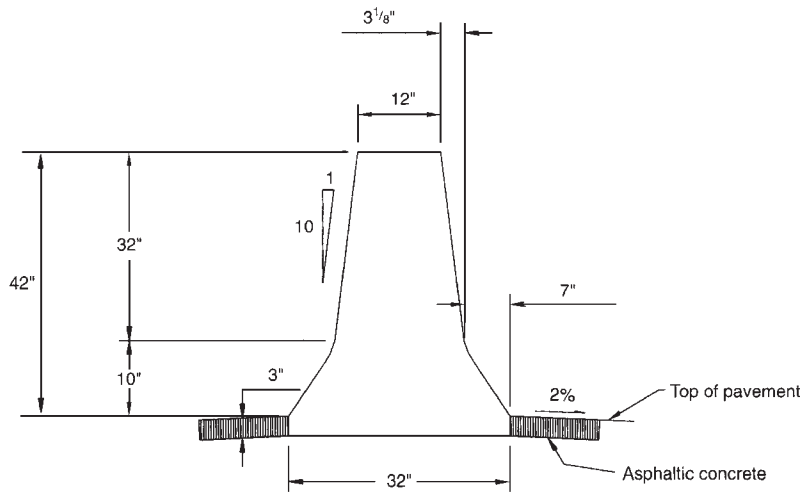

AASHTO Designation:	**SGM11b**
Test Level:	TL-5
Nominal Barrier Height:	42 in
Maximum Dynamic Deflection:	0

Remarks: This tall-wall concrete safety-shape barrier is used by the New Jersey Turnpike Authority.

FIGURE 6.33 Tall-wall concrete safety-shape (unreinforced) median barrier. Conversion: 1 in = 25.4 mm. (*From* Roadside Design Guide, *AASHTO, Washington, D.C., 2002 and 2006, with permission*)

for some length and a centrally located median barrier is situated upstream and downstream, use a gradual transition between the systems proceeding in the direction of traffic.

6.11 BRIDGE RAILINGS AND TRANSITIONS

Bridge railings are longitudinal barriers intended to prevent vehicles from running off the edge of a bridge. A metal post-and-rail system, a concrete safety shape, and various combinations have been used. Bridge railings are attached to the structure and designed to have minimal deflection under impact. The AASHTO *Standard Specifications for Highway Bridges* require that bridge railings meet specific geometric criteria and resist specified loads without exceeding allowable stresses. However, the AASHTO *LRFD Bridge Design Specifications* provide the most current design criteria, based on NCHRP Report 350. While AASHTO specifications do not prescribe bridge rail crash testing, the Federal Highway Administration (FHWA) does require that all bridge railings used on the National Highway System be of a crash-tested design. Existing railings designed to prior AASHTO specifications or crash-tested under earlier guidelines may be acceptable through evaluation of in-service performance.

www.EngineeringEBooksPdf.com

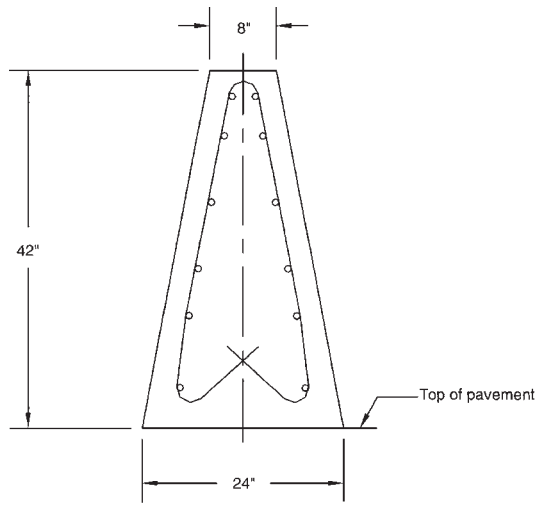

AASHTO Designation:	**SGM11b**
Test Level:	TL-5
Nominal Barrier Height:	42 in
Maximum Dynamic Deflection:	0

Remarks: This barrier is suitable for both permanent and temporary applications. Its primary advantage is that the adjacent pavement can be overlaid several times without affecting the performance of the barrier. Its disadvantage is that greater vehicle damage occurs at shallower impact angles compared to other safety-shape barriers.

FIGURE 6.34 Single-slope concrete median barrier. Conversion: 1 in = 25.4 mm. (*From* Roadside Design Guide, *AASHTO, Washington, D.C., 2002 and 2006, with permission*)

6.11.1 Selection Considerations

The selection of a railing should include consideration of the following five factors:

Railing performance. There must be evidence that the system will provide the desired performance level. Design to current AASHTO *LRFD Bridge Design Specifications* and crash-testing to NCHRP Report 350 is recommended.

Compatibility. A crashworthy transition section is required if the approach barrier significantly differs in strength, height, or deflection characteristics.

Cost. Life-cycle cost analysis is desirable to compare alternatives. Initial costs, maintenance costs, and the costs of accidents must be considered.

Field experience. Review in-service performance of existing systems to evaluate effectiveness and cost.

Aesthetics. Appearance is particularly important in scenic areas, but systems must be selected that meet required performance levels.

6.11.2 Placement Considerations

Bridges should provide a full, continuous shoulder that maintains uniform clearance with approaching roadside elements. However, if the bridge is narrower than the

www.EngineeringEBooksPdf.com

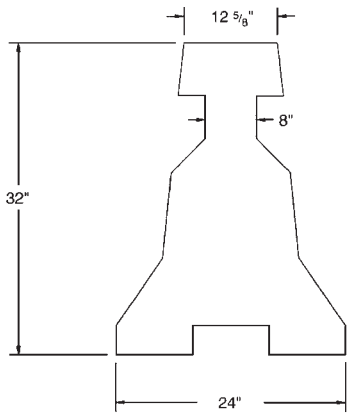

AASHTO Designation:	**SWC01**
Test Level:	TL-3
Nominal Barrier Height:	32 in
Maximum Dynamic Deflection:	2 ft*

Remarks: This proprietary portable barrier system is suitable for both permanent (unbalanced traffic flow) and temporary applications. It is composed of a chain of safety-shape concrete barrier segments 37 in long which can be shifted laterally. Even though the cost is relatively high, the system becomes cost-effective when frequent lateral movement of the temporary barrier is required while maintaining traffic.

*Deflections may be reduced by using CRTS or SRTS.

FIGURE 6.35 Movable concrete median barrier. Conversion: 1 in = 25.4 mm. (*From* Roadside Design Guide, *AASHTO, Washington, D.C., 2002 and 2006, with permission*)

approaching roadway and shoulder, the appropriate flare rate should be provided where the railing is within the shy distance (Art. 6.7.3). Curbs higher than 8 in (200 mm) in front of bridge railings should be avoided. If a sidewalk is present, use a bridge railing between the traffic and the sidewalk to protect pedestrians, and a pedestrian railing along the outside of the bridge. End treatment of the bridge railing is difficult under these circumstances. If a crash cushion or other barrier cannot be used, a vertically tapered end section may be the best solution. The location and extent of the taper must be carefully considered for the conditions present.

6.11.3 Upgrading Bridge Railing Systems

The first step in an upgrading project is to identify potentially deficient systems. Bridge railing designs prior to 1964 are particularly suspect. Strength and performance should be documented. Verify critical details such as base plate connections, anchor bolts, material (strength, toughness, and condition), welding details, reinforcement development, etc. Open-faced railings may cause snagging. Curbs or sidewalks adjacent to a railing may cause an impacting vehicle to vault or roll over. Approach transitions may be inadequate.

Retrofits can be developed to address inadequacies. When possible, use crash-tested designs in such updating. One common improvement is to rebuild the approach barrier and transition to current standards, continuing the metal-beam rail element, for example, across the structure to provide continuity. If a curb is in place, a retrofit railing can

www.EngineeringEBooksPdf.com

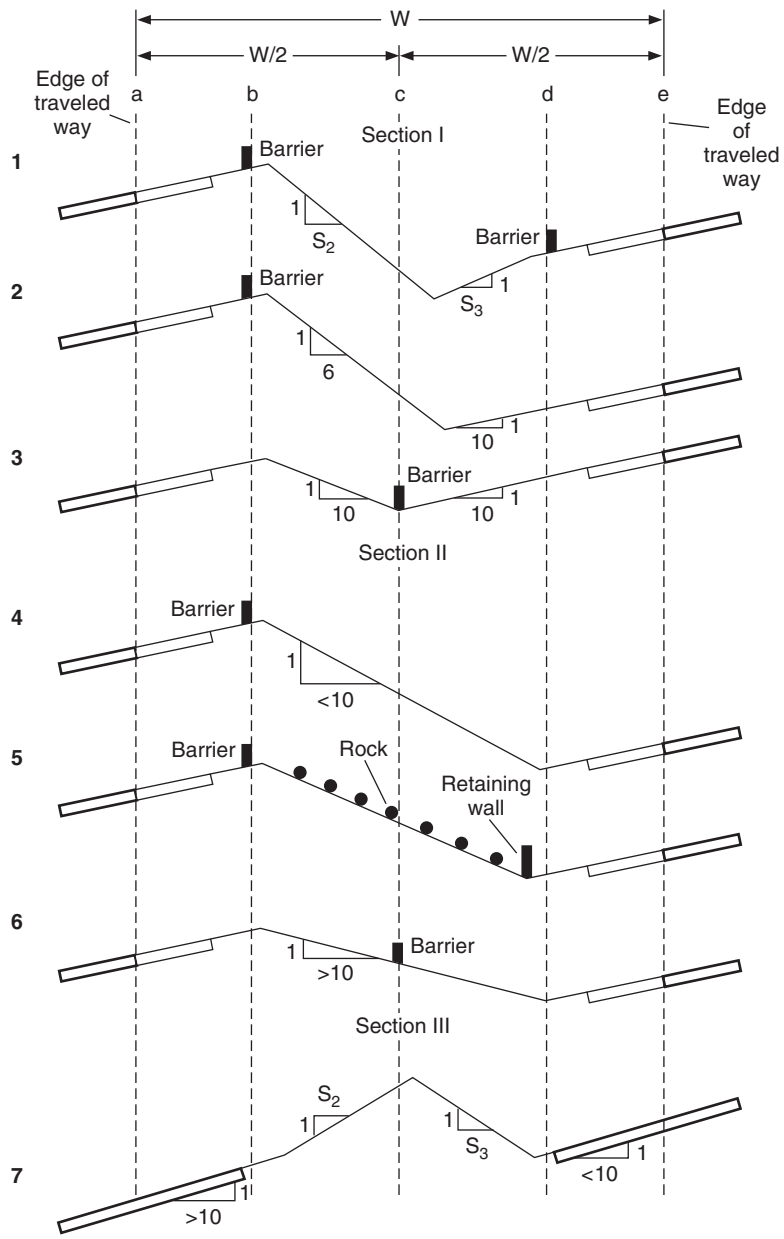

FIGURE 6.36 Barrier placement for sloped medians. (*From* Roadside Design Guide, *AASHTO, Washington, D.C., 2002 and 2006, with permission*)

www.EngineeringEBooksPdf.com

often be blocked out to minimize rollover and ramping. Some specific retrofit concepts are discussed in the following.

Concrete retrofit (safety shape or vertical). The concrete safety shape can be used most effectively when it can be constructed in front of an existing railing that can remain in place. A vertical-faced concrete shape creates an effective barrier when added on top of and flush with an existing safety curb. The structure must be evaluated for the extra dead load imposed, and for the development of the required anchorage to resist impact forces.

W-beam and thrie-beam retrofits. A partial solution sometimes used is to continue an approaching W-beam or thrie-beam roadside barrier across the bridge. It may not bring the bridge into full compliance with AASHTO criteria, but may be satisfactory as an interim solution, particularly on low-volume roadways. Adequate anchorage is provided by the continuous system. Gradual stiffening in the transition area is advised to avoid snagging.

Metal post-and-beam retrofit. Where a sidewalk is present, a steel post (S shape or channel shape) can be anchored to the top and a pair of steel tubes attached to the roadway side to provide a smooth traffic barrier between the sidewalk and the roadway. The tube elements must be in line with the face of the curb. The postattachment can be designed to resist the impact loads, or a yielding design can be developed to minimize possible bridge deck damage. The existing bridge railing on the outside of the sidewalk can be adapted to a pedestrian railing.

6.11.4 Crash-Tested Bridge Railings

Testing criteria and test levels for bridge railings are the same as previously discussed for roadside barriers (Art. 6.4). The FHWA maintains a list of designs that have been tested to NCHRP Report 350 levels, as well as designs that were tested to earlier guidelines and have been assigned an equivalent Report 350 test level. Railings are seldom evaluated for TL-1. Examples of railings designs that meet higher levels are as follows:

TL-2. Thrie-beam bridge railing, side mounted. Consists of a thrie-beam rail centered 22 in (550 mm) above the deck, supported on steel or wood posts mounted on the side of the bridge. It is intended for use on lower-volume secondary roads. Actually tested only to NCHRP 230 criteria, it is considered to meet TL-2.

TL-3. Wyoming Two-Tube bridge railing. Consists of two horizontal tubular rails, 6 × 2 × 0.25 in (152 × 51 × 6.4 mm), supported by fabricated steel posts on 10-ft (3-m) centers, mounted on and flush with concrete curb. Height of top rail is 29 in (740 mm) and height of bottom rail is 16 in (405 mm). A heavier version meets TL-4.

TL-4. (1) Solid concrete railings. The current New Jersey, F-shape, single-slope, and vertical wall types meet TL-4 when adequately reinforced and built to a minimum height of 32 in (810 mm). (2) Massachusetts S3 Steel Bridge Railing. This is a beam and post system with three tubular rails on W6 × 25 (W150 × 37) posts, mounted flush on the outside edge of a sidewalk or on top of a curb. The tube size varies. Steel tube pickets are bolted to the back to provide an aesthetic look. (3) Wyoming Two-Tube bridge railing. Consists of two horizontal tubular rails, 6- × 4- × 0.25-in (152- × 102- × 6.4-mm) top rail and 152- × 76- × 6.4-mm (6- × 3- × 0.25-in) bottom rail], supported by fabricated steel posts on 10-ft (3-m) centers, mounted on and flush with concrete curb. Height of top rail is 33 in (830 mm) and height of bottom rail is 19 in (480 mm). (4) BR27C railing. This railing may be mounted on a curb or flush mounted

www.EngineeringEBooksPdf.com

on the bridge deck. The lower portion consists of a concrete parapet, 24 in (610 mm) high by 250 mm (10 in) thick. The upper portion consists of steel tube posts 4 × 4 × $^{3}/_{16}$ in (102 × 102 × 4.8 mm)/6.5 ft (2 m) spaced at on center. A horizontal steel tube rail [4 × 3 × 0.25 in (102 × 76 × 6.4 mm)] is mounted to the face of the posts.

TL-5. Solid concrete railings. The current New Jersey, F-shape, single-slope, and vertical wall types meet TL-5 when adequately reinforced and built to a minimum height of 42 in (1070 mm).

TL-6. Texas Type TT (Tank Truck). This system consists of a very heavily reinforced and widened concrete safety shape, with a heavily reinforced continuous concrete member and post system above.

6.11.5 Transitions to Bridge Railings

Most of the principles previously discussed for median transitions (Art. 6.9.3) apply here as well. Transition designs should gradually stiffen the approach system to avoid vehicle pocketing, snagging, or penetration. Some considerations of importance follow. The concepts are appropriate for both new construction and retrofits.

- The splice between the rail of the approach barrier and the bridge rail should develop the tensile strength of the approach rail.
- Strong-post systems, or combination normal-post and strong-beam systems, can be used for transitions. These systems normally should be blocked out to avoid snagging. Also, a rub rail may be desirable with W-beam or tube-type transitions. Tapering the rigid bridge railing end behind the transition members may also be desirable. The rub rail and railing taper are specially appropriate when the approach transition is recessed into the end of a concrete railing or other rigid hazard.
- Use a gradual transition, typically 10 to 12 times the difference in lateral deflection of the two systems. Gradually stiffen by decreasing post spacing, increasing post size, and strengthening the rail (nested W-beams or thrie-beams, for example).
- Eliminate curbs, inlets, and other drainage features in front of the barrier. Keep the slope between the edge of the driving lane and the barrier to 1:10 or less.
- When possible, relocate roads that intersect near the end of the bridge and interfere with a proper transition. Crash cushions may provide an option in some cases.

6.12 BARRIER END TREATMENTS AND CRASH CUSHIONS

Barrier terminals and crash cushions are developed to gradually decelerate an impacting vehicle to a stop or to suitably redirect it. Otherwise, untreated ends of barriers and fixed objects can cause severe accidents. A crashworthy end treatment is essential if a barrier terminates within the clear zone or other area where it is likely to be hit by an errant vehicle. Requirements for testing and performance are contained in NCHRP 350. Suitable devices must be able to perform under both head-on and side impacts, with no objects penetrating the passenger compartment or encroaching on other traffic. The vehicle should remain upright and not be redirected into adjacent traffic lanes. Occupant deceleration levels must be within target values. For longitudinal barriers that depend on the tensile strength of the elements, the end treatment must

www.EngineeringEBooksPdf.com

develop the full tensile strength of the rail, whether or not a crashworthy end treatment is employed.

6.12.1 Characteristics of End Treatments

Many types of end treatments are available. Table 6.8 provides a summary of characteristics and test levels for a number of them. A description follows. As indicated, many of the systems are proprietary.

The *three-strand cable terminal* is used at the ends of a three-cable barrier. In one version, the cable barrier is flared back at 4 ft (1.2 m) from the tangent barrier line. The three cable strands are turned down at 45° and anchored to a concrete block in the ground.

TABLE 6.8 Crashworthy End Treatments

System	NCHRP Report 350 test level	System width, ft (m)	System length, ft (m)
Three-strand cable terminal	TL-3	40 (1.2) flare	N/A*
Wyoming Box Beam End Terminal (WYBET-350)	TL-3	2 (0.6)	50 (15.2)
Barrier anchored in backslope	TL-3	N/A	N/A
Eccentric loader terminal (ELT)	TL-3	1.6 (0.5) plus 4 (1.2) flare	37.5 (11.4)
Slotted Rail Terminal (SRT-350)†	TL-3	1.6 (0.5) plus 4 (1.2) flare or 1.6 (0.5) plus 3 (0.9) flare	37.5 (11.4)
REGENT†	TL-3	1.6 (0.5) plus 4.3 (1.3) flare	37.5 (11.4)
Vermont low-speed, W-beam guardrail end terminal	TL-2	4.9 (1.5)	11.15 (3.4)
Flared Energy-Absorbing Terminal (FLEAT)†	TL-2	1.6 (0.5) plus 1.7–2.7 (0.51–0.81) flare	25 (7.62)
	TL-3	1.6 (0.5) plus 2.5–4 (0.76–1.2) flare	37.5 (11.4)
Beam-Eating Steel Terminal (BEST)†	TL-3	1.6 (0.5)	37.5 (11.4) or 50 (15.2)
Extruder Terminal (ET-2000)†	TL-3	1.6 (0.5)	37.5 (11.4) or 50 (15.2)
Sequential Kinking Terminal (SKT-350)†	TL-3	1.6 (0.5)	50 (15.2)
QuadTrend-350†	TL-3	1.5 (0.46)	20 (6.1)
NEAT†	TL-2	1.9 (0.57)	9.7 (2.957)
Sloped concrete end treatment	N/A	2 (0.6)	20–40 (6–12)

*N/A = not applicable.

†Proprietary system.

Source: From *Roadside Design Guide,* AASHTO, Washington, D.C., 2002 and 2006, with permission.

www.EngineeringEBooksPdf.com

The *Wyoming Box Beam End Treatment* (*WYBET-350*) is used with the box-beam barrier. It consists of a nosepiece welded to a box beam, which is inserted into a larger tube that contains a crushable fiberglass composite tube. The device is supported by a wood post. Crushing of the composite tube dissipates the energy. It may be installed parallel to the roadway or flared out at a maximum rate of 1:10.

A *barrier anchored in backslope* is sometimes used in areas of a roadway cut section, or where the road is transitioning from cut to fill. A W-beam guardrail thus anchored has been successfully crash-tested to TL-3. This type of anchor can provide full shielding, eliminate the possibility of an end-on impact with the barrier terminal, and minimize the likelihood of the vehicle passing behind the rail. According to the AASHTO *Roadside Design Guide,* key design considerations include the following:

> (1) maintaining a uniform rail height relative to the roadway grade until the barrier crosses the ditch flow line, (2) using a flare rate within the clear zone that is appropriate for the design speed, (3) adding a rubrail for W-beam guardrail installations, and (4) using an anchor that is capable of developing the full tensile strength of the W-beam rail. Also, the foreslopes on the approach should be no greater than 1:4. If a barrier cannot be terminated in a backslope without violating any of these principles, a different type of end treatment may be more appropriate.

The *eccentric loader terminal* (*ELT*) evolved from efforts to improve the breakaway cable terminal (BCT). The resulting device has a fabricated steel lever nose inside a section of corrugated steel pipe. A strut between the steel tube foundations for the two end posts enables these posts to act together to resist impact loads. Holes are drilled in the next four posts, one hole at ground line and one below ground, to make them break away. A blockout is added to the second post to increase curvature near the end of the rail, thus reducing rail column strength and reducing the likelihood of rail penetration. The end post is offset 4 ft (1.2 m).

The *Slotted Rail Terminal* (*SRT-350*) is a proprietary, flared, non-energy-absorbing terminal, designed to break away when impacted end-on. There are two versions, one with an offset of 4 ft (1.2 m) and another with an offset of 3 ft (0.9 m). They consist of a curved W-beam rail element in which longitudinal slots have been cut at specific locations. This reduces dynamic buckling strength to an acceptable level and controls buckling location, so that the yaw of an impacting vehicle and the potential for secondary impacts with the bent rail are minimized. Rail tension is developed through a cable anchor system. A traversable area must be provided behind the terminal since it is designed to break away when impacted, allowing the vehicle to travel behind the guardrail.

The REGENT is a proprietary energy-absorbing end treatment. It is a flared W-beam terminal that consists of a slider head assembly, a cable anchor/strut and yoke assembly, modified W-beam rail panels, and special weakened wood posts. The post offsets correspond to those of the BCT, except that the REGENT uses more posts to minimize deflection and the posts are of unique design. The modified rail elements are partially crushed at two locations to induce predictable kinks in the rail in end-on hits while maintaining most of the rail's bending strength. A traversable area must be provided behind the terminal since it is designed to break away when impacted, allowing the vehicle to travel behind the guardrail.

The *Vermont low-speed, W-beam guardrail end terminal* is a nonproprietary end treatment for use on roadways where impact speeds do not exceed 45 mi/h (70 km/h). It consists of a 12.5-ft (3.8-m) W-beam rail section that is shop-bent to a 16-ft (4.9-m) radius and mounted on W6 × 9 W150 × 14 steel posts with steel blocks. An anchor consisting of a steel rod and buried concrete block is attached to the rail at the third post from the end.

www.EngineeringEBooksPdf.com

The *Flared Energy-Absorbing Terminal* (*FLEAT*) is a proprietary energy-absorbing end treatment that consists of an impact head installed at the end of a modified W-beam rail, a guide tube assembly, a breakaway cable anchor assembly, and a series of weakened posts. The posts may be wood or of a welded-steel breakaway design. The kinetic energy of a crash is absorbed by the head sliding along the rail element while bending it. The flattened rail exits the head on the traffic side and coils into a tight loop. Tension in the rail is developed through the cable anchor system. The terminal has been tested successfully to TL-3 and TL-2, with a total length of 37.5 ft (11.4 m) and to 25 ft (7.62 m), respectively. The TL-3 terminal can be installed with an offset from 2.5 to 4 ft (0.76 to 1.2 m), and the TL-2 terminal with an offset from 1.7 to 2.7 ft (0.51 to 0.81 m). A traversable area must be provided behind the terminal since it is designed to break away when impacted, allowing the vehicle to travel behind the guardrail.

The *Beam-Eating Steel Terminal* (*BEST*) is a proprietary energy-absorbing end treatment with an impact head mounted on the end of a wood post W-beam guardrail system. Kinetic energy is absorbed by the head, which contains three teeth that slide along the rail and cut it into four relatively flat widths. These widths are subsequently bent out of the path of the impacting vehicle. A cable provides anchorage for downstream impacts, and a quick release attachment allows the W-beam to feed into the impact head during end-on impacts. No flare is required, but to position the impact head entirely outside the shoulder, a 1:50 flare may be desirable.

The *Extruder Terminal* (*ET-2000*) is a proprietary energy-absorbing end treatment, with an extruder head installed over the end of a standard W-beam guardrail element. Kinetic energy is absorbed by the head sliding along the rail element while flattening it and bending it away from the traffic. The extruder head includes a squeezing section and a bending section. The W-beam is fed through the squeezing section, which reshapes the rail into a flat section. Next, the bending section bends the rail around a small radius and directs it to the side, away from the vehicle. A cable provides anchorage for downstream impacts, and a quick release attachment allows the W-beam to feed into the impact head during end-on impacts. No flare is required, but to position the impact head entirely outside the shoulder, a 1:50 flare may be desirable. Either breakaway timber posts or hinged breakaway steel posts may be used with this terminal.

The *Sequential Kinking Terminal* (*SKT-350*) is a proprietary energy-absorbing end treatment that consists of an impact head mounted over the end of a modified W-beam guardrail. The modification consists of punching three slots in the valley of the rail at specific locations. The impact head is forced rearward, bending the W-beam rail against the deflector plate, and absorbing the kinetic energy. A "kinker" beam in the head causes short segments of the rail to kink sequentially and bend away from the impacting vehicle. A cable anchorage system is provided to develop the tensile strength of the rail. No flare is required, but some offset is recommended to locate the edge of the impact head farther from the traveled way. Either breakaway timber posts or hinged breakaway steel posts may be used with this terminal.

The *QuadTrend-350* is a proprietary unidirectional end treatment for direct attachment to a vertical concrete barrier or vertical concrete bridge parapet. Additional transition guardrail sections are not needed. It employs sand-filled, energy-absorbing containers that are sacrificial and must be replaced following impact. Many of the other parts can be reused. A concrete pad is required.

The *Narrow Energy-Absorbing Terminal* (*NEAT*) is a proprietary, narrow, nonredirective, energy-absorbing terminal. The NEAT is an aluminum cartridge, designed to shield the approach end of a portable concrete safety-shape barrier or a Quickchange® moveable barrier system.

A *sloped concrete end treatment* is sometimes used to terminate a concrete barrier, although this end tapering treatment has not met the crash-testing criteria of NCHRP

www.EngineeringEBooksPdf.com

Report 350. This treatment should only be considered for locations where traffic speeds are low, 40 mi/h (60 km/h) or less, and limited space precludes the use of a tested end treatment. Other possible applications include locations where the barrier is flared out beyond the clear zone or where end-on impacts are not likely to occur. Recommended length of the taper is 20 ft (6 m) with 30 to 40 ft (9 to 12m) desirable. The height of the end of the taper should be no greater than 4 in (100 mm).

6.12.2 Characteristics of Crash Cushions

Crash cushions are impact attenuators developed to prevent errant vehicles from impacting fixed obstacles. The crash cushion should either decelerate the vehicle to a safe stop, such as in a head-on hit, or redirect it safely away from the obstacle, in the case of a side hit. Crash cushions are typically used where fixed objects cannot be removed, relocated, converted to a breakaway design, or shielded by a longitudinal barrier. Examples of application sites include exit ramp gores where a bridge rail end or bridge pier presents a hazard, and the ends of longitudinal barriers. Most crash cushions are patented systems developed and tested by the manufacturer, who can also provide design charts for selection of appropriate designs.

Most crash cushions perform their function by the principle of kinetic energy absorption or transfer of momentum. In the first case, energy is absorbed by materials or devices that crush or plastically deform, or by hydraulic devices. A rigid backup support is required for such compression crash cushions. In the second case, the momentum of the vehicle is transferred to an expendable mass, such as containers filled with sand. No rigid backup support is needed for such "inertial" barriers. Some crash cushions use a combination of these principles.

Table 6.9 provides a list of some of the most common crash cushions in use today, and their applicable test levels. A description of these systems follows.

The *Advanced Dynamic Impact Extension Module* (*ADIEM II*) is a proprietary terminal designed to shield the end of a concrete safety-shape barrier. It consists of a 30 ft-long (9.1-m) carrier beam or concrete base structure onto which 10 interlocking perlite concrete crushable modules are mounted. Energy is dissipated by crushing the modules. Perlite is an expanded inert mineral that, when substituted for coarse aggregate in a concrete mix, results in an extremely lightweight and crushable material. Strength levels in the perlite concrete are closely controlled to ensure that it falls within acceptable levels compatible with acceptable vehicle deceleration limits.

The *Brakemaster 350* is a proprietary design used primarily as a terminal for W-beam median barriers or as a crash cushion to shield narrow obstacles. If used to terminate a concrete median barrier, a suitable transition is required between the device and the concrete. It may also be used to shield the end of a roadside barrier but may not be cost-effective. The manufacturer recommends use in low-frequency impact areas. This terminal consists of an anchor assembly with posts embedded in the ground, a cable/brake assembly, and W-beam panels supported by steel diaphragms that slide backward in end-on hits. When impacted end-on, the W-beam panels telescope and the cable/brake assembly absorbs most of the energy through frictional resistance. The anchor assembly also provides sufficient anchorage to redirect side-impacting vehicles. A paved installation pad is not required.

The *Crash Cushion Attenuating Terminal* (*CAT*) is a proprietary, nonflared attenuator commonly used to terminate W-beam median barriers and as a crash cushion to shield narrow fixed objects. A transition design is required for the latter case. It is sometimes used to shield a W-beam roadside barrier, but in that case, a cable anchor is required at the downstream. The CAT can redirect vehicles striking its face from one side or both

www.EngineeringEBooksPdf.com

TABLE 6.9 Crashworthy Crash Cushions

System	NCHRP Report 350 test level	System width, ft (m)	System length, ft (m)
Advanced Dynamic Impact Extension Module (ADIEM II)*	TL-3	2.3 (0.7)	30 (9.1)
Brakemaster 350*	TL-3	2.1 (0.64)	31.5 (9.6)
Crash Cushion Attenuating Terminal (CAT)*	TL-3	2.3 (0.7)	31 (9.5)
Bullnose guardrail system	TL-3	14.8 (4.5)	65 (20)
ABSORB 350*	TL-2	2 (0.6)	17 (5.2)
	TL-3	2 (0.6)	32 (9.7)
	TL-3	2 (0.6)	27 (8.3)
QuadGuard family*			
QuadGuard			
Three-bay unit	TL-2	2 (0.6)	13 (4.0)
Six-bay unit	TL-3	2.5 (0.76)	22 (6.74)
QuadGuard Wide			
Three-bay unit	TL-2	Up to 7.5 (2.29)	13 (4.0)
Six-bay unit	TL-3	Up to 7.5 (2.29)	22 (6.74)
QuadGuard LMC			
11-bay unit	TL-3	4 (1.2), 5.7 (1.75), or 7.5 (2.29)	33.33 (10.16)
QuadGuard Elite			
Seven-bay unit	TL-2	2–7.5 (0.6–2.29)	23.8 (7.26)
Nine-bay unit	TL-3	2–7.5 (0.6–2.29)	35.5 (10.82)
Trinity Attenuating Crash Cushion (TRACC)*	TL-3	2.6 (0.8)	21 (6.4) plus 2 (0.6) backup
Reusable Energy-Absorbing Crash Terminal (REACT 350)*			
Four-cylinder array	TL-2	3 (0.9)	13.1 (4.0)
Nine-cylinder array	TL-3	3 (0.9)	30.7 (9.35)
Narrow Connecticut impact attenuation system (NCIAS)	TL-3	3 (0.9)	24 (7.3)
Sand-filled plastic barrels (two-column array)			
Fitch*	TL-3	6.6 (2.0)	Varies
Energite*	TL-3	6.6 (2.0)	Varies
TrafFix*	TL-3	6.6 (2.0)	Varies
Gravel bed attenuator	N/A†	N/A	N/A
Dragnet*	N/A	N/A	N/A
Water Twister Vehicle Arresting System (VAS)*	N/A	N/A	N/A

*Proprietary system.

†N/A = not applicable.

Source: From *Roadside Design Guide,* AASHTO, Washington, D.C., 2002 and 2006, with permission.

www.EngineeringEBooksPdf.com

sides. The CAT functions as a three-stage system, utilizing energy-absorbing beam elements, breakaway wood posts, and a cable anchorage system. The beam element is a slotted W-beam that telescopes during impact. Shearing of the steel rail between the slots dissipates energy.

The *bullnose guardrail system* provides a nonproprietary means for shielding an object in the median of a divided highway by constructing a thrie-beam guardrail envelope around the end. Several such designs using W-beam guardrails have been constructed by highway agencies in the past, but these did not meet the criteria of NCHRP Report 350. However, a design that has met TL-3 consists of slotted thrie-beam panels mounted on breakaway posts near the nose, followed by standard thrie-beam posts and blocks toward the back of the system. Rail tension is developed through cable anchors and struts. A set of steel retention cables is mounted on the back of the thrie-beam nose to contain vehicles in the event of rail fracture. The leading edge of the bullnose attenuator should be located a minimum distance of 62 ft (19 m) in advance of the shielded object.

The *ABSORB 350* is a proprietary, nonredirective, crash cushion primarily designed to shield the ends of the Quickchange® median barrier. This is a narrow cushion that may also be used to shield ends of concrete barriers or narrow fixed objects. The system is comprised of multiple, water-filled, energy-absorbing elements; a nosepiece assembly; and a transition/attachment assembly. Three length configurations are available.

QuadGuard refers to a family of proprietary devices with similar design and performance characteristics. The design consists of several types of energy-absorbing cartridges supported by a framework of steel diaphragms and corrugated steel fender panels. A concrete pad and rigid backup are required. Crash energy is dissipated by telescoping rearward and crushing the cartridges. The devices meet TL-2 or TL-3, as indicated in Table 6.9. Many parts of the various systems are interchangeable. The *standard QuadGuard* is a bidirectional device used as an end treatment for a concrete barrier or narrow fixed object. The cartridges must be replaced after an impact. The *QuadGuard Wide* is similar but can be used to shield wider objects. The *QuadGuard LMC* (*Low-Maintenance Cartridge*) is a self-restoring, bidirectional end treatment used at locations where a moderately high frequency of impacts is anticipated. It can be used to shield rigid barriers or fixed objects and is available in two widths. Energy-absorbing components are elastomeric cylinders that are reusable after most design impacts. The *QuadGuard Elite* is a self-restoring, bidirectional end treatment for locations with high-impact frequency. It can be used to shield rigid barriers or fixed objects and is available in two widths. The energy-absorbing components are high-density polyethylene cylinders that are reusable after most design impacts.

The *Trinity Attenuating Crash Cushion* (*TRACC*) is a proprietary system. Components include a pair of guidance tracks, an impact "sled," intermediate steel frames, and W-beam fender panels. A concrete pad and rigid backup are required. The sled, or impact face, contains a hardened steel blade that absorbs energy by cutting metal plates on the sides of the guidance tracks as it is forced backward. The intermediate frames that support the fender panels are free to slide backward on an end impact, but lock onto the guidance tracks on a side impact to redirect the vehicle.

The *Reusable Energy-Absorbing Crash Terminal* (*REACT 350*) is a proprietary system comprising single row of 0.9-m-diameter (3-ft), high-density, polyethylene cylinders atop steel skid rails; a restraining cable system consisting of two heavy steel wire rope assemblies along each side; a front and rear anchorage system; transition hardware; and a backup assembly. A nine-cylinder array meets TL-3 and a four-cylinder design meets TL-2. The system may be used on either a concrete or an asphalt surface if properly anchored. The polyethylene cylinders absorb energy as they slide rearward

www.EngineeringEBooksPdf.com

on the steel railing, and are self-restoring in many cases. The steel cables redirect vehicles in side impacts. A wider REACT that can be used to shield fixed objects up to 5 ft (1.5 m) was tested successfully to TL-3. This design consists of two parallel columns of 2-ft-diameter (0.6-m) cylinders attached to steel diaphragms mounted on an anchored monorail, which provides redirection for side impacts.

The *narrow Connecticut impact attenuation system* (*NCIAS*) is a nonproprietary, bidirectional crash cushion that consists of eight steel cylinders in a single row with two anchored wire tension cables along each side. The cylinders, which are 3 ft (0.9 m) in diameter and 4 ft (1.2 m) high, crush to absorb energy. The tension cables keep the cylinders in place and provide redirection for side impacts. The last four cylinders are reinforced with pipe stiffeners and retainers to help redirect vehicles hitting close to the rear. The NCIAS is recommended for use where shielding of narrow objects is needed and reverse-direction impacts are unlikely.

Sand-filled plastic barrels, sometimes called *inertial crash cushions* or *inertial barriers,* are used in both temporary and permanent installations to shield the ends of longitudinal barriers or other fixed objects. The sand-filled barrels dissipate energy by transferring vehicle momentum to the variable masses of sand in the barrels that are hit. Standard module masses vary from 200 to 2100 lb (90 to 960 kg). A backup structure or wall is not required because the force that a vehicle exerts on the individual modules is not transmitted through the cushion. Manufacturers have developed standard arrays that can be used for specific types of fixed objects as well as design charts to analyze layouts. The barrels should be set as far from the traveled way as possible to minimize hits. However, the width of the last row should always be greater than the width of the shielded object. Moisture content of the loose sand should be 3 percent or less and clean sand should be used to minimize caking. A significant variation in the density of the sand could affect performance. Frozen sand reduces safety performance but mixing rock salt (5 to 25 percent by volume, depending on climate) with the sand generally prevents wet sand from freezing. The use of sacked sand to facilitate cleanup is not acceptable.

The *gravel-bed attenuator* provides a means to decelerate large trucks. Basically, the truck is slowed as the wheels move through a bed of gravel. It is typically used on truck escape ramps along descending highway grades where runaway vehicles present a problem. Crash cushions previously discussed are designed to stop or redirect passenger cars and pickup trucks. They are not applicable to large vehicles, because considerable space is required to dissipate the energy. Detailed design guidelines for the gravel-bed attenuator are provided in the AASHTO publication *A Policy on Geometric Design of Highways and Streets.*

The *Dragnet* or chain-link fence vehicle attenuator is a proprietary device consisting of anchor posts, energy-absorbing reels of steel tape, and a net assembly to catch the vehicle. When impacted, the chain-link fence wraps around the front of the impacting vehicle and energy is absorbed as the metal tape is pulled through a series of rollers. The system may be repaired by replacing the steel tape in the casings and resetting the chain-link fence and cable. The Dragnet may be considered for locations where impacts are expected to be head-on and the results of vehicle penetration are severe, such as for temporary road and ramp closures, or in conjunction with a longitudinal barrier to shield the opening between twin bridges. It is designed to stop a 4500-lb (2000-kg) passenger car impacting head-on at 60 mi/h (100 km/h). It has also been used in series to stop large vehicles where space will not accommodate a gravel bed attenuator. Such a system safely stopped at 50,000-lb (22,700-kg) tractor-trailer impacting at 90° and 50 mi/h (80 km/h). Since the Dragnet deflects significantly, it can be used effectively only at locations where a sufficient clear area exists behind it. Because of the low deceleration rates resulting, very little damage is done to impacting vehicles and serious injuries to vehicle occupants are unlikely.

www.EngineeringEBooksPdf.com

TABLE 6.10 Comparative Maintenance Requirements for Crash Cushions

System	Regular maintenance	Crash repair	Material storage
ADIEM II*	Can be inspected on a drive-by.	Damaged concrete modules must be replaced. Damaged covers should also be replaced. Most other parts are normally reusable.	Replacement concrete modules, covers, and other parts per the manufacturer's recommendation.
Brakemaster*	Can be inspected on a drive-by. Should be inspected on-site periodically.	Most aboveground components can be damaged and need replacement.	Braking mechanisms, fender panels, diaphragms, etc., per manufacturer's recommendations.
CAT*	Can be inspected on a drive-by, except for cable tension which should be checked periodically.	Nose, rail elements, and wood posts must be replaced. Foundation tubes are normally reusable.	Rail elements and wood posts.
Bullnose guardrail system	Can be inspected on a drive-by. Cable tension should be checked periodically.	Rail elements and posts must be replaced. Cables and foundation tubes are normally reusable.	Slotted thrie-beam rail elements and wood posts.
ABSORB 350*	Can normally be inspected on a drive-by. Periodic on-site inspections should be performed to be certain that all parts are properly connected.	Nosepiece and damaged energy-absorbing elements must be replaced.	Replacement nosepiece, energy-absorbing elements, and fluid supply. Other parts per manufacturer's recommendation.
QuadGuard*	Can normally be inspected on a drive-by; missing or displaced cartridges can be readily noted. Should be periodically inspected on-site to be certain that all parts are properly connected.	Nose, expended cartridges, and damaged fender panels must be replaced. Unit must be repositioned.	Spare cartridges, nose units, fender panels, and other parts per manufacturer's recommendation.
QuadGuard LMC and Elite*	Can normally be inspected on a drive-by. Periodic on-site inspections should be performed to be certain that all parts are properly connected.	Most of unit is reusable after a crash. Unit must be repositioned.	Fender panels and other replacement parts per manufacturer's recommendation.

www.EngineeringEBooksPdf.com

TRACC*	Can normally be inspected on a drive-by. Periodic on-site inspections should be performed to be certain that all parts are properly connected.	The rip plates require replacement. Since these elements are located at the base of the unit, extensive disassembly is required. The nose and fender panels may also need replacement.	Replacement rip plates, nose sections, fender panels, and other replacement parts per manufacturer's recommendation.
REACT 350*	Can be inspected on a drive-by.	The system is considered fully reusable. Repositioning is normally all that is required after an impact.	Spare parts per manufacturer's recommendation
NCIAS	Can be inspected on a drive-by.	Crushed units must be removed from site; minor damage can be repaired on-site by jacking.	Spare cylinders to replace badly damaged units.
Sand-filled barrels	Can be inspected on a drive-by for external damage. If lids are not riveted on, sand content should be checked periodically.	Individual sand barrels must be replaced after a crash; units damaged by nuisance hits must also be replaced. Debris must be removed from the site.	Spare barrels, sand support inserts, and lids; supply of sand.

*Proprietary system.

Source: 8From *Roadside Design Guide,* AASHTO, Washington, D.C., 2002 and 2006, with permission.

www.EngineeringEBooksPdf.com

The *Water Twister Vehicle Arresting System* (*VAS*) is a proprietary system consisting of a chain-link restraining net connected to two energy-absorbing base units by nylon straps. As an impacting vehicle displaces the net, the straps turn shafts connected to turbine rotors inside the base units, which contain a water/ethylene glycol solution. Rotation of the turbine blades in the fluid dissipates energy. The base units are of substantial size and may require shielding.

6.12.3 Selection of Crash Cushions

Selection of the most appropriate crash cushion depends on site characteristics, performance of the systems, maintenance characteristics, and life-cycle cost. Both the geometrical conditions encountered and the space requirements for the different systems vary widely. Obstacles greater than 16 ft (5 m) wide can be shielded by systems such as arrays of sand-filled barrels, or the bullnose attenuator. Where space is limited, narrow systems are appropriate. The structural and safety characteristics of alternative systems must be carefully reviewed and matched with needs. Items to consider include impact deceleration, redirection capability, impact debris, and anchorage and backup requirements. Table 6.10 has been prepared to compare the maintenance requirements of the different systems. Agency maintenance records should be used to establish associated costs. After potential systems have been identified for a given site, the final selection should be based on a life-cycle cost analysis. (See Chap. 10.) Costs to consider are the initial cost of the device, site preparation and installation costs, and maintenance costs, as well as the cost of accidents.

6.12.4 Placement of Crash Cushions

For proper performance, crash cushions should be placed on level terrain with a clear path between the roadway and the attenuator so the vehicle can strike at normal height, with the suspension system in a neutral state. Avoid curbs or slopes in front of the device. Install the attenuator on a smooth surface (usually concrete) so it can compress uniformly. Conspicuous, well-delineated crash cushions are less likely to be hit than those that blend into the background. If the system is not reflective, install standard object markers to improve visibility at night and during inclement weather.

www.EngineeringEBooksPdf.com

CHAPTER 7
SIGNING AND ROADWAY LIGHTING

PART 1

SIGNING

Brian L. Bowman, Ph.D., P.E.
Professor of Civil Engineering
Auburn University
Auburn, Alabama

Part 1 of this chapter presents a comprehensive review of the design, construction, and maintenance of highway signs. Both single- and multiple-mounted sign supports are addressed, with an emphasis on highway safety. Breakaway supports with various types of slip bases, frangible bases, and post hinging systems are explained and illustrated. Commercially available devices and alternatives are identified and discussed. Guidelines on use and construction are summarized. An extensive list of references, which are noted in the text, concludes the section. Much of this material was derived from studies made by the author under a Federal Highway Administration project, NHI 38034, "Design, Construction and Maintenance of Highway Safety Features and Appurtenances."

7.1 TRAFFIC SIGNING NEEDS

The capability of roadways to safely and efficiently serve vehicular traffic is dependent to a large extent on the adequacy of traffic control devices. The majority of motorists drive in an orderly and safe manner, provided they are given reliable regulatory, warning, and guide information. Motorists, through training and experience, develop expectations on when and in what manner they will be provided necessary information for safely controlling their vehicles. Motorists expect that similar traffic control devices will always have the same meaning and will require the same motorist action regardless of where they are encountered. This expectation has been enhanced by the use of uniform traffic control devices which enable motorists to consistently interpret the general intent of a device by its message, shape, and color.

www.EngineeringEBooksPdf.com

The advantages of traffic control device uniformity were recognized long ago. The American Association of State Highway Officials published specifications of road markers and signs for rural roadways in 1925. A manual for urban roadways was published in 1929 by the National Conference on Street and Highway Safety. The unification of the standards applicable to the different classes of roadways was addressed by a joint committee of the American Association of State Highway Officials and the National Conference on Street and Highway Safety. The joint committee developed, and printed in 1935, the first *Manual on Uniform Traffic Control Devices for Streets and Highways* (*MUTCD*) [1]. That joint committee, although subsequently reorganized and named the National Committee on Uniform Traffic Control Devices (NCUTCD), has been in continuous existence and contributes to periodic revisions of *MUTCD.*

The benefits of traffic control device uniformity include increasing safety by providing the road user with required information for vehicle guidance or control at the right time and place and in the proper manner. Signs should be installed only where warranted. This can include locations where special regulations apply at specific places or specific times or where hazards are not self-evident. They also provide information of highway routes, directions, destinations, and points of interest. The general standards for signs provided in Chap. 2A of the *MUTCD* and those sections pertaining to the particular type of sign being installed should be followed to ensure proper placement and message uniformity [2].

7.1.1 Uniformity Considerations and Necessary Deviations

While the advantages of uniformity far outweigh the disadvantages, there are some undesirable effects when complete uniformity is maintained. One of the principal disadvantages is that strict uniformity may result in the failure to adopt an improved device or procedure simply because it is not in common use. In addition, total uniformity would require the specification of a separate traffic control device for every conceivable roadway geometric and traffic operational condition. This would be a monumental task that undoubtedly would still not cover every situation, while simultaneously increasing the size of *MUTCD* with devices of limited application.

This difficulty is recognized in *MUTCD,* which indicates that warning signs other than those specified in the manual may be required under special conditions [2, Sec. 2C.02]. *MUTCD* requires exercising good engineering judgment in determining the need for other warning devices. It also mandates that the innovative devices be understood easily by the motorist. Ensuring that warning signs are easily understood necessitates that they be of standard shape and color and that the legends be unambiguous and brief. Establishing the need for distinct warning devices can be accomplished by identifying when standard devices do not properly address unusual conditions. While these conditions are unusual, they can typically be classified into the same use categories that are appropriate for standard warning signs. The *Traffic Control Devices Handbook* [3] identifies the following uses of warning devices:

- To indicate the presence of geometric features with potential hazards
- To define major changes in roadway character
- To mark obstructions or other physical hazards in or near the roadway
- To locate areas where hazards may exist under certain conditions
- To inform motorists of regulatory controls ahead
- To advise motorists of appropriate actions

The need to provide advance warning for unusual roadway, roadside, operational, and environmental conditions has resulted in the development of a wide diversity of

www.EngineeringEBooksPdf.com

devices. The majority of these devices can be categorized as warning signs containing different symbols and legends. Other warning devices include flashing beacons, rumble strips, pavement surface treatments, and pavement markings. Device complexity ranges from simple passive warning signs to devices that are activated by vehicle speed, headway, or presence on one or more approaches to a potentially hazardous roadway element. Further information on supplemental warning and rumble strips can be obtained from the National Cooperative Highway Research Program (NCHRP) publications *Synthesis of Highway Practice 186: Supplemental Advance Warning Devices* and *Synthesis of Highway Practice 191: Use of Rumble Strips to Enhance Safety* [4, 5].

7.1.2 Legal Responsibility

Estimates by the FHWA indicate that there are an average of 15 signs per mile on the nation's 3.8 million miles of streets and roadways [6]. The resultant 57 million traffic signs represent a huge investment in materials, labor, equipment, and maintenance costs. While this is a significant investment, improvements using standard traffic control signing are reported in the "1988 Annual Report on Highway Safety Improvement Programs" as having the highest benefit-cost ratio of any highway safety improvement [7]. Properly designed, located, and maintained standard traffic signs and other carefully conceived devices can be an effective method of increasing traffic and operational efficiency and subsequently decreasing the tort liability exposure of roadway agencies.

The concerns about tort liability judgments are valid, as the number of cases is steadily increasing. In almost every state, the shield of sovereign immunity either has been abolished by judicial decisions or has been eroded by legislative modifications to governmental immunity. In one state, for example, the legislature was instructed to enact comprehensive tort claim procedures in the near future or the doctrine of immunity would be abrogated by the state supreme court. In another state, the concept of sovereign immunity was declared unconstitutional [8].

A tort is a civil wrong or injury. The purpose of a tort action is to seek compensation for damages to property and individuals. The following elements must exist for a valid tort action:

- The defendant must owe a legal duty to the plaintiff.
- There must be a breach of duty; that is, the defendant must have failed to perform a duty or performed it in an improper manner.
- The breach of duty must be a proximate cause of the accident that resulted.
- The plaintiff must have suffered damages as a result.

In highway-related tort cases, the first element is relatively easy to establish. Roadway authorities have been vested with the responsibility of providing reasonably safe travel opportunity for roadways under their jurisdiction. The failure of the roadway agency to properly perform that duty, and that this breach of duty was the proximate cause of an accident, are more difficult to establish. In most instances, establishing that a breach of the legal duty occurred becomes a major issue in tort liability cases. Plaintiffs typically will attempt to establish that the agency having roadway jurisdiction was negligent in its duty and/or a physical condition was permitted to exist that was a hazard.

Negligence is the failure to exercise such care as a reasonably prudent and careful person would use under similar circumstances. Roadway agencies can be judged negligent in two ways: (1) wrongful performance (misfeasance), or (2) the omission of performance when some act should have been performed and was not (nonfeasance). Roadway agencies can, therefore, be judged negligent either by addressing a safety problem incorrectly or by ignoring it. The critical issue in highway tort liability is the

www.EngineeringEBooksPdf.com

care with which highway agencies perform their responsibilities. If it is judged that a reasonable standard of care was not exercised, then the responsible persons and/or organizations may be held liable for injuries and damages that resulted.

In an attempt to familiarize roadway agencies and their employees with the potential liability, and to make them aware of their duties and responsibilities to the traveling public, the NCHRP published *Synthesis of Highway Practice 106: Practical Guidelines for Minimizing Tort Liability* [8]. In particular, this publication advises agencies to supply a consistent highway environment for motorists. The use of standard design features and uniform traffic control devices is also emphasized.

All states are to adopt the standards of *MUTCD* as the basis for designing and installing traffic control devices. Some states adopt *MUTCD* in its entirety, while other states incorporate additional devices and practices into their manuals which address their specific roadway design and driver expectancy needs. *MUTCD* provides minimal requirements, and states that do prepare their own manuals are required to conform to the national standard. Additional devices not included in either the federal *MUTCD* or those of the states are frequently developed to provide motorist warning of roadway hazards which, ideally, should be eliminated. The reasons for not eliminating the hazard can include geometric constraints, planned improvements, usefulness of the condition for other purposes, burden of removing the condition, and the lack of a method to correct the situation. When the need to warn motorists involves commonly encountered hazards, such as a stop sign ahead on a rural roadway, then an appropriate warning device can be found in *MUTCD.* When the hazard is posed by unusual or unique conditions, however, the highway engineer is placed in the difficult position of identifying, or often designing, a warning device that provides a clear message to the motorist of the potential hazard. It should be emphasized that the installation of a warning device does not remove the agency from liability, especially if it can be shown that it was reasonably possible to eliminate the hazard.

7.1.3 Design of Supplemental Warning Devices

Designing a warning device that provides a clear, unambiguous message to the motorist can be a difficult task. The difficulty is due in part to the concern of the engineer to act in a "reasonable and prudent" manner. Increasing motorist safety and minimizing liability require that the device provide a readily understood and unambiguous message.

In the design of warning signs, it is important to remember that signs are designed to draw attention to themselves through contrast, color, shape, composition, reflectorization, and illumination, with a simple message providing a clear and understandable instruction to the motorist. Sign size, symbol size, lettering size, and placement should be such to allow adequate time for proper response. Uniform and reasonable instructions to the motorist will instill respect and develop willing compliance with the sign message. For these reasons, the majority of general warning signs should be designed as diamond shapes with black letters on a yellow background. Standard sign letters are prescribed in FHWA *Standard Highway Signs,* which should be used to develop lettering size and style [9]. Sections 2C.01, 2C.02, 2C.03, and 2C.04 of *MUTCD* contain information that must be followed in the design of warning signs. In addition, Sec. 1A.11 of *MUTCD* lists additional publications and documents that provide requisite information for the proper design of warning signs.

7.1.4 Identifying Need for Supplemental Advance Warning Devices

Locations which would benefit from the installation of supplemental advance warning devices typically exhibit safety and/or operational problems. Establishing the need for

www.EngineeringEBooksPdf.com

supplemental devices, therefore, requires identifying the problem locations and performing a safety and/or operational analysis. Deficient locations can be identified by a traffic safety management system, citizen complaints, employee observations, and by safety analysis during a planned resurfacing, restoration, and rehabilitation (RRR) project.

Accident-based studies are used to identify locations that can be considered hazardous due to a large number of accidents. These studies involve the review and analysis of systemwide accident information. To compare the accident experience of several locations, the length of time over which accidents are counted, the traffic volumes, and the length of roadway section involved should be the same at each location. If not, accident rates may be compared between locations, provided that a common unit of exposure (e.g., accidents per million vehicle miles for longer roadway sections, or accidents per million entering vehicles for spot locations and intersections) is used.

Potential locations can also be identified by complaints received from citizens and by observations made by employees. Often a combination of accident analysis and an investigation of complaints and observations is required for low-volume roadways. Complaints about "near misses" and observations of hazardous roadway elements can be considered indicators of site deficiencies. This type of information is treated by some agencies with the same importance as a documented accident history. Such treatment has the advantage of reducing the number of accidents required to identify the hazardous roadway locations.

It should be recognized that maintaining a complaint and employee observation file requires that the agency be responsive to these inputs. Complaints and observations are notifications of hazards that become a matter of public record and are available as evidence should an accident result in litigation. This alone is not a valid reason to fail to maintain a complaint and observation file. If a defect is allowed to remain for an unreasonable period of time, even if no complaints or observations were received, the courts can consider it as constructive notice and assign liability. Complaint and observation files should, therefore, be maintained and a program established to respond to all complaints and to document facts and engineering decisions to minimize the possibility of lawsuit losses.

An opportune time to identify the need for a device is during the design phase of projects primarily intended to upgrade the physical and operational characteristics of the roadway. This opportunity can be used to detect safety and operational deficiencies and to select appropriate improvements that can be incorporated into the upgrading project.

The identification of potential locations for each of the previous methods should include a field inspection to help establish the cause of the deficiency and appropriate countermeasures. If the site inspection indicates that the deficiency cannot be readily corrected due to cost or physical constraints, then an advance warning device should be installed. If the site conditions are sufficiently unusual that an appropriate warning device is not contained in the federal or appropriate state *MUTCD,* then a supplemental device may need to be used or developed until it is feasible to take care of the underlying problem.

For example, consider a situation where a sag vertical curve was constructed to provide sufficient vertical bridge clearance on a roadway with a posted speed of 45 mi/h (70 km/h). Analysis of the areawide accidents indicated that there is a higher than expected occurrence of intersection-related and rear-end accidents at a signalized intersection immediately downstream of the bridge. A visit to the site indicated that the signal faces were not visible to approaching drivers until they were 400 ft (120 m) from the stop line. Since this distance is less than the minimum visibility distance of 460 ft (140 m) specified by Sec. 4D.15 of *MUTCD,* a Signal Ahead sign (W3-3) was installed [2]. The engineer determined that, although the minimum recommendations of *MUTCD* were being achieved, safety improvements could be achieved by providing real-time warning that a stop will be required at the intersection. Since removing the sight obstruction was not

www.EngineeringEBooksPdf.com

FIGURE 7.1 Example of supplemental advance warning sign.

possible, the engineer considered lowering the speed limit and/or providing additional motorist warning. Experience with lowering speed limits indicated that this countermeasure was not an effective long-term solution. The engineer decided to install an active supplemental advance warning device with the legend "Prepare to Stop When Flashing" configured as shown in Fig. 7.1. The device was installed over the roadway, 500 ft (150 m) in advance of the stop bar, and interconnected with the traffic signal controller. The horizontally mounted beacons were timed to flash yellow 8 s prior to the red indication so that drivers passing the beacon at the legal speed limit would have advance warning of the required stop at the intersection. The yellow beacons continued to flash until 3 s before the end of the red indication to allow the start of queue dissipation. Motorists not encountering the flashing lights could expect not needing to come to a complete stop at the signal, while still having the signal presence reinforced by the overhead sign. The engineer plans to continue monitoring the location to determine if the active advance warning device is effective in reducing accidents.

7.1.5 Concerns on Use of Supplemental Advance Warning Devices

A large number of supplemental advance warning devices have been used by roadway agencies to inform motorists of unusual geometric, operational, or traffic control features. The use of a device by an agency does not imply that it is a viable or desirable device to use for identified deficiencies. The following concerns should be considered prior to the installation of any device not specified in *MUTCD:*

- Many warning devices are attempts at political, inexpensive, and/or quick solutions to totally inappropriate roadway conditions. The proper countermeasure for many of these conditions is to correct the fault rather than installing an additional motorist warning. Installing a supplemental warning device should be considered a temporary countermeasure until the inadequate roadway conditions can be corrected.
- *MUTCD* provides guidance on the proper placement of traffic control devices to provide adequate time for motorists to perceive, identify, decide upon, and perform any necessary maneuver. Section 2C-3 provides guidelines for the minimum placement

www.EngineeringEBooksPdf.com

distances of warning signs, while Sec. 4D.15 specifies the minimum continuous visibility distances that should be present for motorists approaching a traffic signal. The inability to provide the minimum visibility distance is one indication of the need to install an advance warning sign. Guidelines on the height and lateral location of signs are summarized in Fig. 2A-1 in *MUTCD* [2]. The guidelines of Part 2—Signs of *MUTCD* should be followed for the installation of all traffic signs.

- Section 2C.03 of *MUTCD* states that warning signs shall consist of a black legend and border on a yellow background [2].
- Section 2C.02 of *MUTCD* permits the design of warning signs for special conditions [2]. These signs should, however, be constructed with clear and concise verbal messages. Letter legibility and size, combined with placement, must provide a clear meaning and provide ample time for response. Section 1A.10 of *MUTCD* provides an approval process for new symbols and does not permit the use of symbols that are new or unique and, thereby, not readily understandable by the motorist [2]. The only exception to the provision of nonstandard symbols is where minor modifications to *MUTCD* symbols are necessary to adequately describe specific design elements of the roadway. An example of a permitted symbol modification is displaying a curve on "Intersection Warning Signs" (W2-2) if the side road occurs in the vicinity of a horizontal curve. Devices that use symbols not contained in *MUTCD,* or in *Standard Highway Signs,* are nonstandard devices [2, 9].
- Warning devices should have the same silhouette shape as the device shape. For example a 36-in × 36-in (915-mm × 915-mm) diamond warning sign mounted on a 48-in × 48-in (1220-mm × 1220-mm) square piece of plywood would not satisfy the shape requirement. Dawn and dusk light conditions, fog, and other poor-visibility situations can result in interpreting the warning sign as a guide sign.
- Section 4K.03 of *MUTCD* permits the use of hazard identification beacons to supplement an appropriate warning sign or marker [2]. The hazard identification beacon consists of one or more sections of the circular yellow traffic signal head indication with a visible diameter of not less than 8 in (200 mm). *MUTCD* prohibits the placement of the beacons within the border of the sign except when used with a School Speed Limit sign. If two beacons are used, they should be alternately flashed at a rate of not less than 50 nor more than 60 times per minute.
- Unique situations in the roadway environment can result in the need for changes or additions to *MUTCD.* Section 1A.10 provides the procedure to be followed for consideration of a new device to replace a present standard device, for additional devices to be added to the list of standard devices, or for revisions to recommended application. Agencies that encounter the frequent need of a unique application are encouraged to request permission to experiment from the Federal Highway Administration, Office of Transportation Operations (HOTO), 400 Seventh Street S.W., Washington, DC 20590.

7.2 CRASHWORTHY CONCERNS OF ROADSIDE FEATURES

The need for traffic signs, roadway illumination, utility service, and postal delivery results in roadside features frequently placed within the roadway right-of-way. (Also see Chap. 6, Safety Systems.) The presence and location of these obstacles varies by roadway type and location. Rural freeways, for example, can be designed where traffic

www.EngineeringEBooksPdf.com

signs are the only obstacles that are added to the roadside. Signs, light pole standards, utility poles, and mailboxes are all frequently encountered on rural collectors. These obstacles, when present, perform a necessary function, but are also potential fixed objects for an errant vehicle. To reduce accident severity it is important that signs, roadway illumination supports, utility poles, and mailboxes be properly designed, located, and placed within the right-of-way. As a general rule, there are a number of options that can be used by design engineers to provide a safe design. In order of preference these options are

- Do not install the obstacle.
- Install it on existing overhead structures, where it does not become an additional fixed object hazard.
- Locate the feature away from the traveled way or behind existing barriers where it will be less likely to be struck.
- Reduce impact severity by using appropriate breakaway or yielding design.
- Shield the feature with a properly designed longitudinal barrier or crash cushion if it cannot be eliminated, relocated, or redesigned.
- Delineate an existing feature if other measures are not practical. Putting up hazard markers is a cost-effective method for alerting motorists to an existing hazard. Obviously, delineators will not make any difference if a driver hits the object, but they might help a driver avoid running off the road at that spot.

Yielding or breakaway supports should be used on all types of sign, luminaire, and mailbox supports that are located within the clear zone. The clear zone is the total roadside area, starting at the edge of the traveled way, that is available for safe use by a vehicle. The desirable width of the clear zone is dependent upon traffic volume, speed, and the roadside geometry. The traversable area is the roadside border area that permits a motorist to maintain vehicle control including being able to slow and stop safely. The traversable area can exceed the desirable clear zone called for in the *Roadway Design Guide* [10]. Only yielding or breakaway supports should be permitted in the traversable roadside, even if it is located beyond the clear zone. In those instances where yielding or breakaway supports are not possible, such as large cantilever sign installations, shielding with crash cushions or guardrail should be used.

Yielding supports refer to those supports that are designed to remain in one piece and bend at the base upon vehicle impact. The anchor portion remains in the ground and the upper assembly passes under the vehicle. The term *breakaway support* refers to support systems that are designed to break into two parts upon vehicle impact. The release mechanism for a breakaway support can be a slip plane, plastic hinges, fracture elements, or a combination of these.

The technology of yielding and breakaway support systems has experienced dramatic improvements. These improvements were prompted by an increased emphasis on roadside safety and by the large reduction that has occurred in the weights of automobiles. Many foreign and domestic automobiles on our roadways weigh less than 2250 lb (1020 kg), which was at the bottom of the domestic weight range in 1975. By 1983 the trend to more fuel-efficient automobiles had resulted in approximately 40 percent of auto sales being vehicles weighing less than 2250 lb (1020 kg). Automobiles of 1600 lb (725 kg) and less are now operating on U.S. highways. The typical family automobile weighs somewhere between 2000 and 4000 lb (900 and 1800 kg), with only the luxury and a few other types weighing more. A survey of high-level automotive industry leaders, conducted by the University of Michigan, indicates that the total vehicle weight will remain fairly constant [11].

www.EngineeringEBooksPdf.com

The evolving safety feature environment and the change to the vehicle fleet weights have resulted in a number of revised standard specifications for the testing and acceptance of yielding and breakaway support systems. Requirements for yielding and breakaway support systems were introduced by AASHTO in 1975 and revised in 1985 to keep abreast of new research and development. Two of the most significant changes in the 1975 and 1985 specifications are the reduction in weight of the design vehicle from 2250 lb (1020 kg) to 1800 lb (820 kg) and the change from measures of momentum to measures of change in velocity. These changes, however, do not imply that safety features that satisfied the old specifications do not satisfy revised specifications. For example, the 1985 standard testing guidelines require that supports should impart a preferred vehicle change in velocity of 10 ft/s (3.1 m/s) or less, but not more than 15.4 ft/s (5 m/s). A support that would cause a 2250-lb (1020-kg) vehicle (i.e., 1975 design vehicle weight) to experience an 11-ft/s (3.4-m/s) change in vehicle velocity at a test speed of 20 mi/h (32 km/h) would likely result in 15.4-ft/s (5-m/s) change in velocity when tested under the same conditions with an 1800-lb (820-kg) vehicle (i.e., 1985 design vehicle weight) [12]. These values compare favorably with the change in momentum requirements cited in the 1975 specifications. Supports that had acceptance test numbers near the preferred values for the old specification can, therefore, be expected to meet the new specification requirement.

Some of the changes in the 1985 AASHTO standard specifications were due to testing guidelines contained in NCHRP Report 230 [13]. NCHRP Report 350 establishes current testing guidelines for vehicular tests to evaluate the impact performance of permanent and temporary highway features, and supersedes those contained in NCHRP Report 230 [13, 14]. These guidelines include a range of test vehicles, impact speeds, impact angles, points of impact on the vehicle, and surrounding terrain features for use in evaluating impact performance. Acceptance testing of yielding and breakaway supports requires evaluation in terms of the degree of hazard to which occupants of the impacting vehicle are exposed, the structural adequacy of the support, the hazard to workers and pedestrians who may be in the path of debris from the impact, and the behavior of the vehicle after impact. The guidelines include requirements for

- The structural adequacy of the device to determine if detached elements, fragments, or other debris from the assembly penetrate, or show potential for penetrating, the passenger compartment or present undue hazard to other traffic.
- A range of preferable and maximum vehicle changes in velocity resulting from impact with the support system. The preferable change in vehicle velocity is 10 ft/s (3.0 m/s) or less. The maximum acceptable change in vehicle velocity is 16 ft/s (5.0 m/s). Note that due to conversion to the SI system the limiting velocity changes were rounded and consequently are not precisely the same as those in NCHRP Report 230 [13].
- The impacting vehicle to remain upright during and after the collision.
- The vehicle trajectory and final stopping position after impact to intrude a minimum distance, if at all, into adjacent or opposing lanes.

It is important to use only those support assemblies that have been tested, using the standard specifications, and subsequently approved for use by the FHWA. This is true for city and county jurisdictions where roadway speeds are generally less than what can be expected on state and rural roadways. Impacts with supports can be hazardous even at lower speeds, especially for occupants of a small vehicle. It should be noted that many supports can be more hazardous at low speeds, say 15 to 20 mi/h (25 to 40 km/h), than at high speeds, say 55 to 60 mi/h (90 to 100 km/h). For example, sign supports that fracture or break away can be more hazardous at low speeds, where the energy imparted to the support is not sufficiently large to make the device swing up and over

www.EngineeringEBooksPdf.com

the vehicle. The result can be intrusion of the lower portion of the support into the passenger compartment. Similarly, devices designed to yield are generally more hazardous at high speed, due to the reduced time available for deformation and subsequent passage beneath the vehicle.

The acceptance testing guidelines are intended to enhance experimental precision while maintaining cost within acceptable bounds. The wide range of vehicle speed, impact angle, vehicle type, vehicle condition, and dynamic behavior with which vehicles can impact the support cannot be economically replicated in a limited number of standardized tests. The use of an approved device does not, therefore, guarantee that it will function as planned under all impact conditions. However, the failure or adverse performance of a highway safety feature can often be attributed to improper design or construction details. The incorrect orientation of a unidirectional breakaway support, or something as simple as a substandard washer, are major contributors to improper function. It is important for proper device function that the safety feature has been properly selected, assembled, and erected and that the critical materials have the specified design properties.

When possible, and appropriate, the placement of traffic signs, luminaires, and utility and mailbox supports should take advantage of existing guiderail, overhead structures, and other features that will reduce their exposure to traffic. Care should be taken to ensure that supports placed behind existing, otherwise required barriers are outside the maximum design deflection standards of the barrier. This will prevent damage to the support structure and help ensure that the barrier functions properly if impacted. The design deflections are based on crash tests using a 4400-lb (2000-kg) vehicle impacting the barrier at 60 mi/h (100 km/h) and an angle of 25°. The crash tests are conducted under optimum conditions. Other conditions such as wet, frozen, rocky, or sandy soil may result in deflections greater or less than the design values. Typical anticipated deflections are presented in Table 7.1. A summary of FHWA letters of acceptance for sign support types and hardware may be found in the AASHTO *Roadside Design Guide* [10].

7.2.1 Need Determination and Placement of Traffic Signs

Estimates on the number of signs present on our roadways vary drastically. An NCHRP synthesis indicated 58 million signs, while a study for the FHWA estimated that there are approximately 250 million sign assemblies on the U.S. roadway system [15, 16]. Signs contribute an important role in increasing the safety of the roadway by providing regulatory, warning, control, and guidance information to the driver. Every sign that is installed on its own support system, however, provides a fixed object for a potential collision. Even a relatively small sign on an apparent weak support can have severe consequences when struck at high speed.

TABLE 7.1 Design Dynamic Deflections of Various Barrier Types

Barrier type	Design deflection,* ft	Design deflection,* mm
Concrete safety shape	Minimal	Minimal
W-beam strong shape	3.0	900
W-beam weak post	6.5	1980
Box beam	5.0	1500
Cable guiderail	11.0	3350

*Deflections are measured from the back of the post at the top.

www.EngineeringEBooksPdf.com

MUTCD provides information on when traffic signs should be installed. In the case of regulatory signs, and in most cases for warning signs, there are specific warrants that should be met prior to installation [2]. Installing unnecessary signs increases operating and maintenance costs, increases the potential of fixed-object collisions, and reduces sign credibility to the motorist.

7.2.2 Sign Assemblies

The sign panel, the support, and the embedment or anchorage system are the three components of a sign assembly. Each component contributes to the effectiveness, structural adequacy, and safety upon impact of the device. The sign assembly must be structurally adequate to withstand its own weight and the wind and ice loads subjected to the sign panel. In some northern climates, this requirement includes the forces created by snow ejected by snowblowers or the lateral forces resulting from snowplow activity. The majority of the design guides for each state contain recommendations on the size, number, and type of support required in different regions of the state. These guidelines are based on the size of the sign panel and the recurrent wind intensity. Average wind loads for 10-, 25-, and 50-year recurrence intervals are also contained in AASHTO's Standard Specification for Structural Supports for Highway Signs [12].

7.2.3 Sign-Support Considerations

There are a variety of systems used to support ground-mounted traffic signs. These systems were often categorized by whether they were intended to support small or large signs. Small signs were arbitrarily defined as those having a total panel area of less than 50 ft^2 (4.7 m^2) [17]. This designation is, however, arbitrary and not effective in identifying the characteristics of the support used. An alternative method of categorizing sign types is by designating them as single- or multiple-mount systems. Multiple mounts include two or more supports that are separated by 7 ft (2100 mm) or more. Sign panels supported by a single support or by multiple supports less than 7 ft (2100 mm) apart are considered single mounts. The separation criterion allows for the possibility that a vehicle, leaving the roadway at an angle, can impact more than one support. Signs supported by more than one support, in addition to being separated by more than 7 ft (2100 mm), must also be designed for each support to independently release from the sign panel. Multiple-support systems, therefore, must have sign panels with sufficient torsional strength to ensure proper release from the impacted support while remaining upright on the support(s) that were not impacted. This also requires that the remaining support(s) have sufficient strength properties to prevent the sign panel from breaking loose and entering the passenger compartment or becoming a projectile.

Metal supports that yield upon impact have been used for many years to provide effective economical supports for traffic signs. The U-channel post design is the most widely used support for both single- and multiple-support designs [17]. Yielding supports are designed to bend at the base and have no built-in breakaway or weakened design. Systems in this category include the full-length steel U-channel, aluminum shapes, aluminum X-posts, and standard steel pipes. For successful impact performance, the support must bend and lie down or fracture without causing a change in vehicle velocity of more than 10 mi/h (5 m/s). Tests have shown that supports that fracture offer much less impact resistance, especially at high-speed impacts, than yielding supports of equal size.

The impact behavior of base-bending supports depends upon a number of complex variables including cross-sectional shape, mechanical properties, energy-absorption capabilities under dynamic loading, chemical composition, type of embedment, and

www.EngineeringEBooksPdf.com

characteristics of the embedment soil. The wide number of variables related to the properties of the support itself require that full-scale crash testing be performed to evaluate the impact behavior of base-bending supports. Tests are performed on categories of support types that need to be specified during their purchase. For example, U-channel posts, while of the same shape, will have different impact characteristics depending upon their unit weight and whether they are cold-rolled or hot-shaped.

The impact performance of base-bending supports depends upon the interaction between the structure and the soil in which it is embedded. Soil conditions vary drastically with location, even within small geographic locations. Due to this variability, NCHRP 350 has established *standard* soil conditions (previously referred to as "strong soil") and *weak* soil for testing. Weak soil consists of relatively fine aggregates that provide less resistance to lateral movement than that provided by a standard soil.

The rules on weak soil versus strong soil are, however, in question. The FHWA has insisted that yielding supports be qualified in both soils in order to be eligible for federal aid. However, recently completed crash testing yielded very few acceptable supports in weak soil. FHWA considers that it may be too restrictive to forbid all use of those supports that failed in weak soil. The standard soil in NCHRP Report 350 is the "strong soil." If a state has potential sites where the device will be installed in weak soils and believes that the device may not behave as well as in strong soil, then weak soil testing is called for. Otherwise, a device that has been found acceptable only in strong soil may be used only in strong soil.

The proper performance of some base-bending supports requires that they do not pull out of the soil upon low-speed impact. Placing these base-bending devices in weak soil, when they have been approved for use only in standard soil, or at an improper embedment depth will not provide acceptable low-speed performance. If the device was installed on a narrow median, for example, it can pull out of the ground upon impact and become a lethal trajectory to opposing traffic. Consideration must be given to the soil acceptance criteria of the post planned for use, the soil condition present, sign location, and the safety performance needs of the sign assembly.

Breakaway supports are designed to separate from the anchor base upon impact. Breakaway designs include supports with frangible couplings, supports with weakened sections, bolted sections, and slip base designs. Breakaway supports are classified by their ability to properly separate from the base upon impact from one direction (unidirectional) or from any direction (multidirectional). Large signs, requiring multiple supports separated by 7 ft (2100 mm) or more, often use a hinged breakaway mechanism with a horizontal slip base. The use of slotted hinge plates, on both sides of the upper beam, and a horizontal slip base results in proper device function from either the front or the back. The action of the hinged breakaway is illustrated in Fig. 7.2.

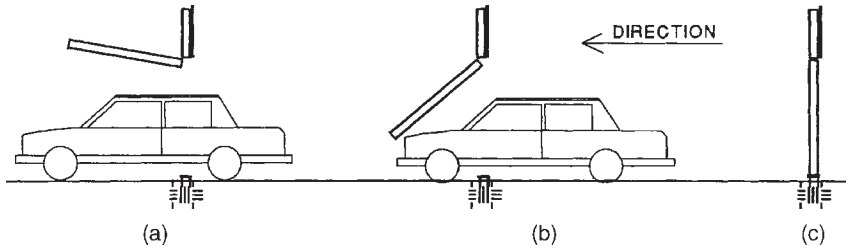

FIGURE 7.2 Illustration of hinged breakaway action. (*a*) Hinge activation. (*b*) Slip plate release. (*c*) Sign prior to impact.

www.EngineeringEBooksPdf.com

In addition to the yielding and breakaway sign support, overhead and fixed-base support systems may be used. Overhead sign support systems include the use of existing structures, such as bridges, that span the traffic lanes. Fixed-base support systems include those that do not yield or break away upon impact. Fixed-base systems are made of materials that will not fracture upon impact and are firmly embedded in or rigidly attached to a foundation. Fixed-base systems are often used to support overhead signs on roadway facilities with three or more lanes or for traffic signal supports. The large mass of these support systems and the potential safety consequences of the systems falling to the ground necessitate a fixed-base design. Fixed-base systems are rigid obstacles and should not be used in the clear zone area unless shielded by a barrier.

The total combination of support systems and methods of embedment is large. Considering the following factors can assist in selecting the most appropriate sign support system:

- Large ground-mounted signs can be located 50 ft (15 m) or more from the edge of pavement on high-speed facilities. These substantial lateral clearances increase the roadside recovery zone while still meeting motorist viewing needs.
- The performance of any sign assembly is influenced by the surrounding terrain. Terrain that will cause the vehicle to impact the sign assembly at a higher or lower point than the design impact height can cause unpredictable and often hazardous results.
- The height of post-mounted signs is determined by drivers' need of a legible message and by the functional requirements of the support system. A breakaway support system designed with a hinge, for example, will not function properly if the sign is mounted so low on the support system as to interfere with the hinge action.
- Efforts should be exerted to keep the top of the sign panel at a height of 9 ft (2700 mm). Placing the sign at this height reduces the possibility that the top of the sign will break the windshield and intrude into the passenger compartment during impact. If the top of the sign panel is at least 9 ft (2700 mm) high, then the sign will hit the vehicle's roof and reduce the probability of vehicle intrusion. The majority of signs that meet the *MUTCD* standards for clearance to the bottom of the sign will also meet the minimum height to the top of the sign panel. Exceptions to this include rural installations with mounting heights less than 7 ft (2130 mm) to the bottom of the sign with sign panels less than 4 ft (1200 mm) in size.
- Traffic signs should not be considered permanent solutions to inappropriate or hazardous roadway conditions. Installing a warning sign, for example, to warn of a shoulder dropoff does not eliminate the dropoff problem and presents an additional fixed object.

7.2.4 Influence of Surrounding Terrain on Proper Breakaway Performance

Breakaway supports are designed and evaluated to operate safely on the basis of the characteristics of the vehicle fleet. One of the primary characteristics included in discussions of the impacting vehicle is its weight. While weight is very important, the bumper height is equally important, since it establishes where the vehicle weight is first concentrated on the breakaway support. The majority of the safety evaluation tests are conducted on level terrain. This implies that the impacting design vehicles are striking the breakaway supports at a known height—typically, about 20 in (500 mm) above the ground. Roadside safety could, therefore, be enhanced if wide, level areas are provided along the roadside.

Providing this level roadside is not practical or possible in the majority of roadside situations. Side slopes, ditches, cross-slopes, curbs, and other drainage and terrain

www.EngineeringEBooksPdf.com

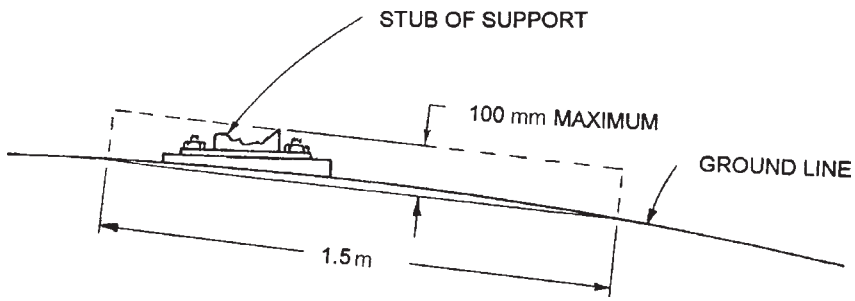

FIGURE 7.3 Breakaway support stub height measurement. Conversions: 100 mm = 4 in, 1.5 m = 5 ft.

features are necessary roadside design features. How these features can interact with and influence vehicle trajectory and device performance must be considered prior to device installation.

Breakaway support devices are designed to function properly when the slip base is subjected to shear forces. If the point of impact is at a significantly higher point than the design height of 20 in (500 mm), then sufficient shearing forces may not be transmitted to the base. The result can be binding of the mechanism and nonactivation of the breakaway device. It is critical, therefore, that breakaway supports not be located near abrupt changes in elevation, superelevation transitions, changes in slope, or curbs that will cause vehicles to become partially airborne at the time of impact. As a general rule, if negative side slopes are limited to 6:1 or flatter between the roadway and the breakaway support, then vehicles will usually strike the support at an acceptable height.

Supports should not be placed in locations where the terrain features can possibly impede their proper operation. Placing supports in drainage ditches can result in erosion and freezing, which can affect the operation of the breakaway support. In addition, vehicles entering the ditch can be inadvertently guided into the support.

Supports should not be installed closer than 7 ft (2100 mm) to other fixed objects. If the supports are placed closer than 7 ft (2100 mm) to other objects that by themselves are considered acceptable, such as a 3-in-diameter (76-mm) tree, then a vehicle will be able to strike both the support and the object simultaneously. The combined effect of both the tree and the support on the change of velocity can be much higher when impacting both objects simultaneously.

Terrain in the vicinity of the support base must be graded to allow vehicles to pass over portions of the support that remain in the ground or that are rigidly attached to a foundation. Remaining portions of the support that protrude more than 4 in (100 mm) above the ground line over a horizontal span of 5 ft (1.5 m), as presented in Fig. 7.3, can snag the vehicle undercarriage.

7.3 DESIGN OF SINGLE-MOUNT SIGN SUPPORTS

Traffic signs are a primary source of information to motorists. The majority of traffic signs consist of sign panels held in place by a single support. Single supports can usually be used for signs as large as 18 ft^2 (1.7 m^2) in area. The only purpose of the sign support is to hold the sign at the proper position for driver visibility. This requires that this support be strong enough to maintain the sign panel in its intended position while

www.EngineeringEBooksPdf.com

subjected to wind, ice, and snow loads. The magnitude of these forces increases as the sign panel becomes larger in size, until the panel is so large that multiple supports are required. Single sign supports are made of different materials, of various sizes and configurations, each capable of withstanding different environmental loads. Considering only the environmental loads and selecting a support system to hold the sign panel at the proper position can result in severe vehicular damage and occupant injury upon impact. Proper sign installation requires that the sign assembly be able to hold its proper position and give way under impact to minimize severity to an errant vehicle and its occupants. This requires the proper design in sign system selection and placement.

Sign supports are classified as single-support and multiple-support systems. *Single sign support* refers to a support that has no other support, or fixed object, within a 7-ft (2100-mm) radius [18]. *Multiple supports* refer to installations that are spaced less than 7 ft (2100 mm) from each other, or from other fixed objects. With the closer spacing, it is possible for a vehicle, leaving the roadway at an angle, to impact more than one fixed object or support at a time. Support systems that provide acceptable performance when struck alone can result in severe occupant injury when struck simultaneously with another support. The discussion of this article pertains to single sign supports (i.e., supports installed no closer than a 7-ft (2100-mm) radius to other sign supports or fixed objects). The single mount support types that are used by most agencies include U-channel, wood, square steel tube, and steel pipe. Descriptions of other single mount post types, such as aluminum and fiberglass, are provided at the following FHWA sign support website: http://safety.fhwa.dot.gov/roadway_dept/road_hardware/signsupports.htm

7.3.1 Sign Components

Sign assemblies consist of four components:

- The sign panel on which the message is displayed
- The signpost
- Mounting hardware and fasteners
- The base for the post

Sign Panels. The majority of sign panels in use today are made from sheet aluminum stock [19]. The thickness of the stock varies depending upon the sign size but is generally not less than 0.16 in (4.0 mm). Plywood is occasionally used by some agencies as the blank material for the reflective sheeting face in areas of frequent vandalism due to gunshots. Wooden sign blanks deform less from gunshots, are easier to repair, and are not as attractive a target as aluminum sign blanks. Plywood, however, does not weather as well as aluminum and, if the edges are not sealed correctly, has a relatively short life. More important, the plywood is heavier than aluminum, thus requiring a stronger post system and increasing the probability of intrusion into the passenger compartment upon impact. Composites such as fiberglass have also been used as sign blank materials with limited success. Early problems with composites included separation of the material and problems with the reflective sheeting adhering to the sign blank. A relatively new sign blank manufactured from recycled thermoplastic soft drink bottles is available from Composite Technologies [20]. These sign panels are molded with sealed edges, will not bend like aluminum, offer excellent bonding to adhesive sheeting, are weather and corrosion resistant, and are cost-effective compared with current aluminum pricing.

www.EngineeringEBooksPdf.com

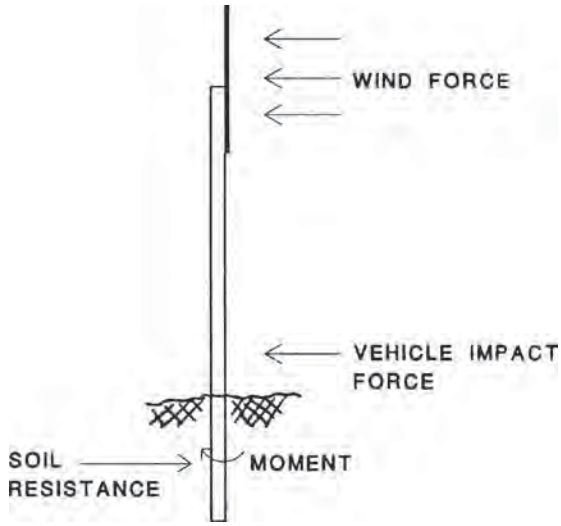

FIGURE 7.4 Wind and impact forces.

Sign Posts. The sign support must be strong enough to resist the wind and other loads yet safely give way when struck by a vehicle [21]. The loading conditions for which the support must be designed are illustrated in Fig. 7.4. The required size of a signpost is dependent upon the surface area of the sign it is supporting and the prevailing environmental conditions. Each state has a series of tables and/or graphs that specify support post requirements based on prevailing wind and ice loads, sign size, and the height of the sign from the ground. These tables provide the information on the support size, embedment depth, and the support type that is required to withstand the environmental loads. The ability of the sign support to operate safely upon impact is dependent on the sign location, features of the surrounding terrain, and the intended method by which the support will give way. All give-way sign support systems operate by (1) complete or partial fracture of the support post, (2) failure of intentionally weakened (frangible) bolts or splices, and (3) mechanical release methods. These designs allow the support system to either bend at the base (base-bending) or break away into one or more pieces. Sign support systems that do not give way upon impact are fixed-base supports which must be shielded with an appropriate barrier when placed within the traversable area.

Base-Bending Support Types. A base-bending support (Fig. 7.5) is designed to bend over, lie down, and pass beneath the impacting vehicle. How effectively it performs is dependent upon the type of support and the velocity of impact. These supports tend to perform better at lower-speed impacts, which provide sufficient time for them to function as designed. Impacts at high speeds will frequently result in the support's partially fracturing or being pulled out of the ground. The performance of base-bending supports is more difficult to predict than that of other support types. Their behavior upon impact is influenced by variations in the depth of embedment, the soil resistance, stiffness of the sign support, mounting height of the sign, and the method of effecting the yielding action. One-piece assemblies are typically either driven directly into the ground or set in drilled holes and backfilled. Instead of a one-piece support, the yielding action is often effected by constructing an anchor system and connecting the sign support to the

www.EngineeringEBooksPdf.com

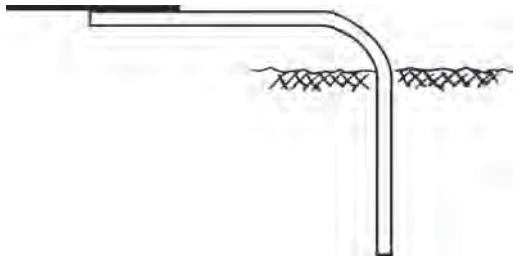

FIGURE 7.5 Example of base-bending support type.

anchor assembly. The connection can be by direct splicing or the use of commercially available couplers that are designed to bend (fracturing) or break partially (frangible). The advantage of the two-piece assembly is that the anchor system is often not damaged during impact, thereby reducing replacement time. Base-bending supports provide a relatively inexpensive support system that reduces the probability that the sign assembly will become a deadly projectile to other traffic, pedestrians, and bicyclists.

Breakaway Support Types. Breakaway sign-support systems (Fig. 7.6) are designed to have the system separate, at or near ground level, into more than one piece upon impact. This is accomplished by complete fracture of the support or by the separation of weakened splice parts. Wood is the most common material used for complete fracture designs. Weakened splice parts can be field-assembled splices, commercially available splices, or frangible couplings. Frangible couplings are necked down to provide a reduced cross-section. Frangible couplings can be used for single sign supports but are generally used for

FIGURE 7.6 Example of breakaway single sign support.

www.EngineeringEBooksPdf.com

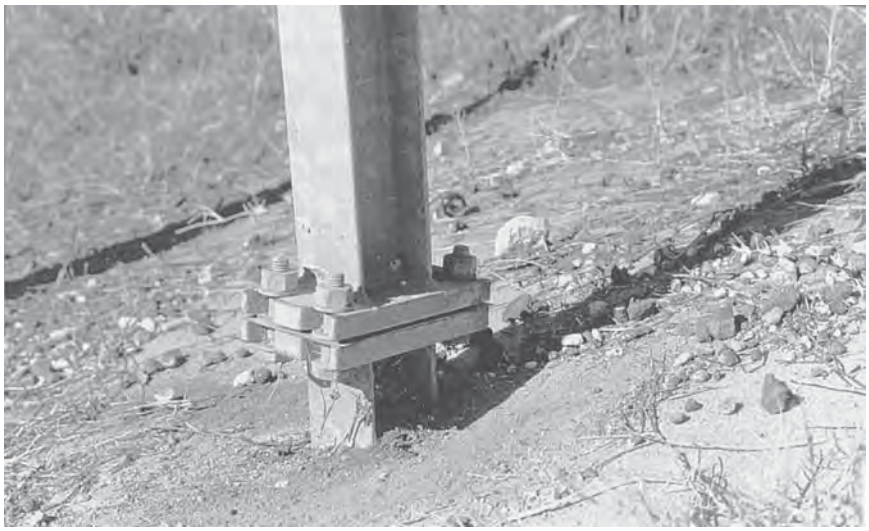

FIGURE 7.7 Example of mechanical release support type.

large, multiple-support systems. Breakaway support systems typically work best for high-speed impacts where the vehicle has sufficient energy to both break the support and propel it away or over the vehicle.

Mechanical Release Support Types. Mechanical support types include slip base designs (Fig. 7.7), which have flat plates welded to both the sign support and the anchor piece. Upon impact, the plates slide against each other allowing the connecting bolts to release.

7.3.2 Sign-Support Selection

The only types of sign-support systems that should be used are those that have been approved for use by the FHWA. The following concerns should be addressed in the selection of an appropriate single–sign-support system:

- The specifications for support size provided by many states provide information on the maximum sign panel area to be mounted on the support. The shape of the sign as well as the area should be considered when determining the type and number of supports required. For example, a 5-ft × 2-ft (1525-mm × 610-mm) guide sign will have less area than a 4-ft × 4-ft (1220-mm × 1220-mm) warning sign. The wide dimension of the guide sign, however, will result in excessive vibration from wind loads if it is placed on a single sign support without bracing. As a general rule, signs over 40 in (1000 mm) wide should be placed on multiple supports.
- Sign-support systems that are not placed in concrete foundations perform better in strong soils than in weak soils, such as sand. When the system is directly placed in weak soils, an anchor plate, a proper concrete footing, or embedment to a greater depth than used for strong soils may be required. This will hold the post firmly in the ground, preventing rotation due to wind loads, and help ensure proper operation during impact.

www.EngineeringEBooksPdf.com

- The embedment depth is important for proper sign assembly operation. One-piece sign assemblies will pull out of the ground if not buried sufficiently deep. If buried too deep, it is difficult to remove the buried segment. Similarly, proper embedment depth for assemblies that use an anchor piece is important to prevent damage to the anchor piece on impact and to prevent rotation due to wind loads. The proper embedment depth varies by type of support system.
- Do not use sign-support sizes larger than required to support the sign or larger than approved for single-support types. For example, a slip base assembly should be used rather than a 6-lb/ft (9-kg/m) U-channel post.
- Do not combine supports, such as square tube inside of pipe, or double the supports, such as back-to-back U-channels.
- Do not use diagonal bracing to strengthen a damaged or improperly designed support system.
- Sign-support assemblies are categorized as unidirectional, bidirectional, and multidirectional. Unidirectional supports will function properly only when impacted from one direction, and bidirectional, from two directions. Multidirectional supports will function properly when impacted from any direction.
- The same type of support post can be configured to operate in different ways upon impact. For example, the U-channel post is basically a unidirectional, base-bending support when buried directly in the ground. It can also be spliced to an anchor piece to provide breakaway characteristics or installed with a frangible coupling to provide multidirectional capability.
- Whenever an anchor system design is used, the anchor stub should not extend more than 4 in (100 mm) above the ground. Extensions above the ground more than this can snag the vehicle undercarriage.
- A minimum mounting height of 9 ft (2740 mm) from the ground to the top of the sign panel is recommended for all single–sign-support installations. Mounting the signs at this minimum height will reduce the possibility of windshield penetration by a sign that bends or yields into the vehicle upon impact.

7.3.3 Steel U-Channels

The steel U-channel support is the most common type of single sign support used in the United States [19]. The steel U-channel is a unidirectional support available in different sizes and stiffnesses from a variety of manufacturers. The most popular steel U-channel sizes are 2, 2.5, 3, and 4 lb/ft (3, 3.7, 4.5, and 6.0 kg/m) (weight is prior to making the fastening holes). The channel is constructed with ⅜-in (9.5-mm) holes on 1-in (25.4-mm) centers to eliminate the need for drilling to mount the sign panel. The posts are available with baked alkyd resin, with gloss enamel paint, or hot-dipped galvanized to inhibit corrosion. The stiffness of U-channel posts is a function of the material from which they are made, and the method by which they are shaped. The literature refers to billet steel or rail steel as the material from which U-channel is constructed. Rail steel is old railroad track—which has a high carbon content—that has been rerolled into the U-channel shape. The high carbon content results in a steel that is strong but relatively brittle. Billet steel is newly formulated steel. The most common grade of billet steel is A36, which is a relatively low-carbon "mild" steel, but billet steel can be manufactured with sufficient carbon to equal or exceed the strength characteristics of rail steel. For years the FHWA required "rerolled rail steel" instead of billet steel, since such a specification helped ensure a high carbon content. High-carbon billet steel U-channel posts are available from manufacturers, but most state specifications still refer to "rail steel."

www.EngineeringEBooksPdf.com

TABLE 7.2 Maximum Allowable Sign Area for One-Piece U-Channel Installation*

a. Area, ft^2, for U.S. Customary units							
	Height from ground to center of sign for 70-mi/h wind, ft†						
Post size, lb/ft	6	7	8	9	10	11	12
2.5	7.5	6.5	5.4	5.4	4.3	4.3	3.2
3.0	9.7	8.6	7.5	7.5	7.5	5.4	5.4
4.0	12.9	11.8	10.8	9.7	8.6	7.5	7.5
b. Area, m^2, for SI units							
	Height from ground to center of sign for 113-km/h wind, m†						
Post size, kg/m	1.8	2.1	2.4	2.7	3.0	3.4	3.7
3.7	0.7	0.6	0.5	0.5	0.4	0.4	0.3
4.5	0.9	0.8	0.7	0.7	0.6	0.5	0.5
6.0	1.2	1.1	1.0	0.9	0.8	0.7	0.7

*Sign sizes are for typical U-channel of rerolled rail steel.

†Height measured from ground to center of sign panel.

Crash tests indicate that, under some test conditions, high-carbon steel U-channel sign posts perform differently from those made of steel having a lower carbon content. The reason for this performance difference is that high-carbon steel posts, because of their low fracture toughness, break under high-speed impacts [22]. Lower-carbon steel posts bend and shape themselves to the front of the vehicle, thereby forming a tethering hook. Billet steel posts that have carbon content similar to that found in rail steel posts match the performance of the rail steel posts when crash-tested.

Table 7.2 presents the maximum allowable sign area for one-piece rail steel U-channel installations. The table is for a maximum allowable pressure resulting from a 70-mi/h (113-km/h) wind velocity. State guidelines should be followed for the expected wind velocities for different regions of the state and to obtain support sizes for other wind velocities.

Base-Bending Installation. One-piece base-bending U-channel post installations are usually obtained by driving the post directly into the ground with a sledge hammer, manual post driver, or air-operated post driver. Drive caps should be used to protect the top end of the post while it is being driven into the ground. U-channel posts should not be encased in concrete unless a breakaway design is used. Typical embedment depth is 3 ft (920 mm), and for ease in removing damaged posts, the driven depth should generally not exceed 3.5 ft (1070 mm). The patented RIB-BAK design of a U-channel has a ribbed back and flange. This design provides extra strength, a flush back-to-back sign-mounting surface, and a ridge for mounting channel locking clips. An alternative to the direct burial system is the V-loc anchor from Foresight Industries. The V-loc anchor is currently the only alternative method of anchoring an unspliced U-channel post that has been found acceptable by FHWA. This anchor system uses locking inserts to hold the U-channel securely into the V-shaped anchor piece. Upon impact, the post will bend at the ground line and may pull completely out of the V-loc anchor.

Breakaway Installations. The repair and performance of large U-channel posts can be eased by using a breakaway design. Breakaway design in U-channel installations is obtained by developing splices at ground level. The splice consists of attaching the signpost to an anchor piece that is embedded in the soil or a concrete foundation. Splice designs include the Eze-Erect by Franklin Steel, the Minute-Man by Marion

www.EngineeringEBooksPdf.com

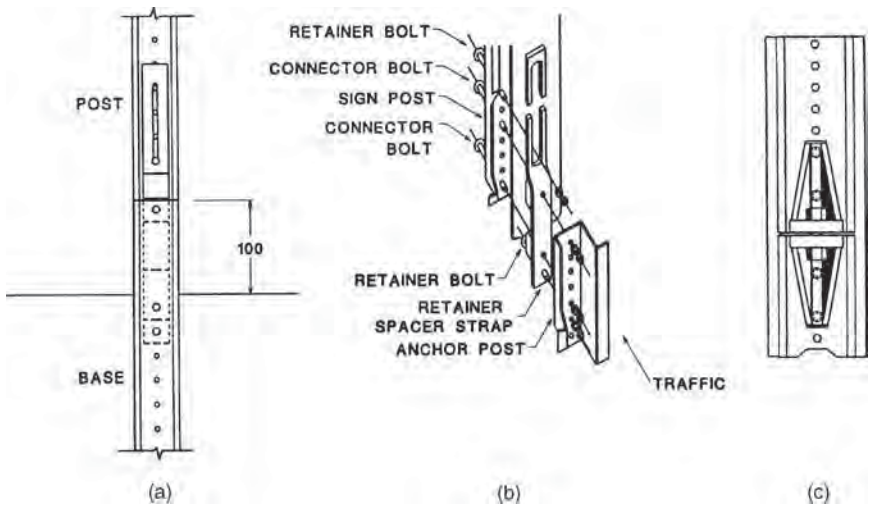

FIGURE 7.8 Breakaway devices for U-channel posts. (*a*) Eze-Erect splice joint. (*b*) Details of Eze-Erect splice. (*c*) Minute-Man coupler. Dimensions shown as mm; 100 mm = 4 in.

Steel, and various lap designs [23]. The intent of the splice designs is for the splice to fail upon impact. The commercially available splices are designed so that the signpost remains attached to the embedded anchor piece and passes beneath the impacting vehicle. This is accomplished by designing the splice device to partially fracture or to completely fracture a frangible coupling. To prevent vehicle snagging, the anchor piece should not extend more than 4 in (100 mm) above the ground. Two commercially available breakaway designs are presented in Fig. 7.8. The Minute-Man consists of a frangible coupling with a backup plate, to hold the anchor and sign-support pieces together. The Minute-Man coupler makes the U-channel a multidirectional support system.

The generic splice (Fig. 7.9) does not require special hardware [24]. It is acceptable for use on 4-lb/ft (6-kg/m) U-channel, or less, installed in strong soil. The generic splice consists of an overlap of 6 in (150 mm) and uses two 5/16-in (8-mm) bolts spaced 4 in (100 mm) center to center. Spacers, 5/16 in (8 mm) thick, are used to separate the U-channel signpost and the anchor piece. The spacer must be strong enough to transfer the load between the webs of the signpost and the anchor piece. The signpost should be mounted behind the stub.

The anchor piece of all breakaway devices should be the same size as the signpost and must not extend more than 4 in (100 mm) above the ground. A splice configuration, as in Fig. 7.10, does not provide protection for the anchor and increases the probability of snagging or of the sign's entering the passenger compartment. Breakaway devices improve the safety characteristics of the post and generally reduce maintenance costs. They should always be used when the sign support is placed in concrete areas. If the sign can be impacted from different directions, then a breakaway device similar to that shown in Fig. 7.8 should be used. Splicing the signpost to the anchor piece with bolts, with or without the splice breakaway device of Fig. 7.8*a,* does not make the U-channel support a multidirectional sign support.

Mounting Concerns. The U-channel post is approved for use in strong soils when impacted from a frontal direction. Installing the support in weak soils or in locations where

www.EngineeringEBooksPdf.com

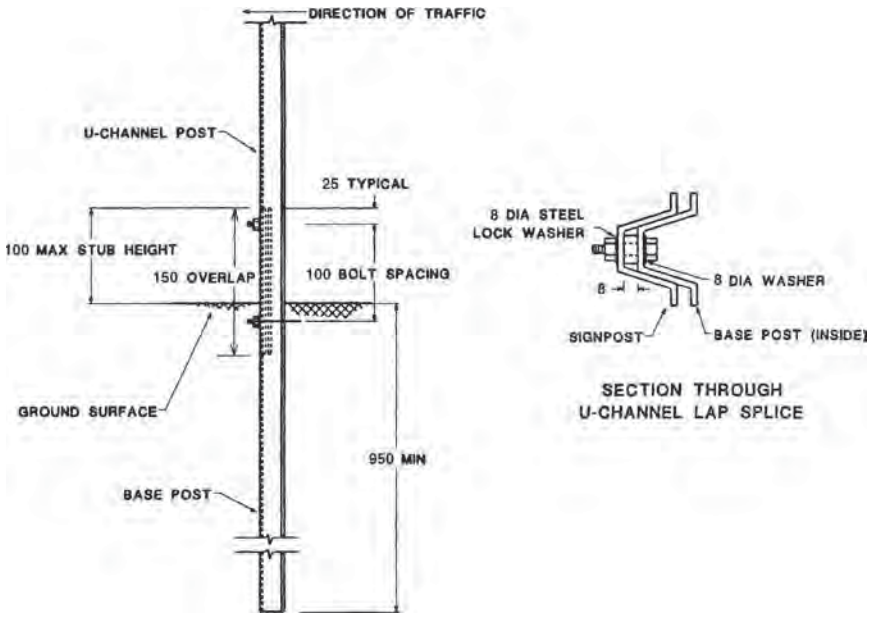

FIGURE 7.9 Details of generic splice configuration. Dimensions shown as mm. Conversions: 8 mm = 5/16 in, 25 mm = 1 in, 100 mm = 4 in, 150 mm = 6 in, 950 mm = 37 in.

FIGURE 7.10 Improper splice of U-channel post system.

www.EngineeringEBooksPdf.com

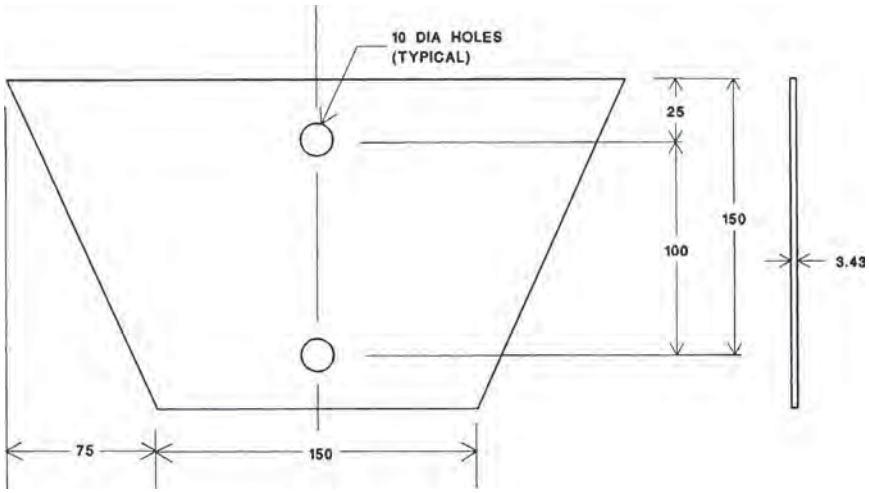

FIGURE 7.11 Large anchor plate for use with U-channels in weak soil locations. Dimensions shown as mm. Conversions: 10 mm = ⅜ in, 3.43 mm = ⅛ in, 2.5 mm = 1 in, 75 mm = 3 in, 100 mm = 4 in, 150 mm = 6 in.

it can be impacted from more than one direction requires more than direct burial to make the U-channel perform as required. If the U-channel is installed in weak soil, an anchor plate, similar to that shown in Fig. 7.11, can be used to hold the sign in its proper position and to help ensure proper operation upon impact. In addition, the generic splice can allow the signpost to separate from the base. The possible consequences of this separation, and the trajectory of the sign assembly, should be considered prior to use of the generic splice.

7.3.4 Wooden Support Posts

Wooden support posts are available in shaped sizes, as engineered products, and as timber posts. The shaped sizes are described by their nominal dimensions, such as 4 in × 4 in (100 mm × 100 mm). This is their size prior to the surfacing required to provide smooth and straight posts. Their actual size is typically less than the nominal size. A 4-in × 4-in (100-mm × 100-mm) post will therefore have an actual size of 3.5 in × 3.5 in (90 mm × 90 mm). The engineered products are made from laminated or pressure-glued wood and nonwood recycled products. Timber posts are round in shape.

All wooden posts are of breakaway design, with the intended fracture of the post near the base and less than 4 in (100 mm) above the ground. The post features that influence fracture include the size of the post, effective cross-sectional area, embedment depth, type of soil, and the species of wood. The majority of wood post tests have been conducted using grade 2 southern yellow pine posts.

Shaped Wood Posts. The most common size wood post used for single sign installations is the 3.5-in × 3.5-in (90-mm × 90-mm) support. This support should be buried directly in strong soil to a depth of at least 36 in (920 mm). The cross-sectional area of this post is sufficiently small that drilled holes are not needed to provide a weakened section.

A 3.5-in × 6-in (90-mm × 140-mm) post installed in strong soil will provide acceptable performance upon impact without reducing the cross-section. Tests have shown, however, that the 3.5-in × 6-in (90-mm × 140-mm), when installed in loose or

www.EngineeringEBooksPdf.com

TABLE 7.3 Required Modifications to Shaped Wood Posts

a. Modifications in U.S. Customary units	
Post size, in	Hole size at 4 and 18 in above ground level, in
3½ × 3½	None
3½ × 5½	1½
5½ × 5½	2
5½ × 7½	3
b. Modifications in SI units	
Post size, mm	Hole size at 100 and 460 mm above ground level, mm
90 × 90	None
90 × 140	40
140 × 140	50
140 × 190	75

sandy soil, is unacceptable when impacted by a small vehicle. Single wood posts of that size installed in weak soil should be modified with 1.5-in-diameter (40-mm) holes to be crashworthy. The holes should be centered at 4 and 18 in (100 and 460 mm) above the ground line and perpendicular to the roadway centerline.

Table 7.3 provides the modifications required for acceptable performance of various shaped wood post sizes. The holes in each case are drilled at 4 and 18 in (100 and 460 mm) above the ground line and perpendicular to the roadway centerline.

Typical details for installation of shaped wood posts by direct burial and concrete methods are presented in Fig. 7.12. The 6-in × 6-in (140-mm × 140-mm) post should be set in unreinforced concrete to help ensure that the post fractures upon impact. To make it easier to remove a broken stub, a post can be wrapped with 0.5-in-thick (13-mm) Styrofoam prior to filling with concrete.

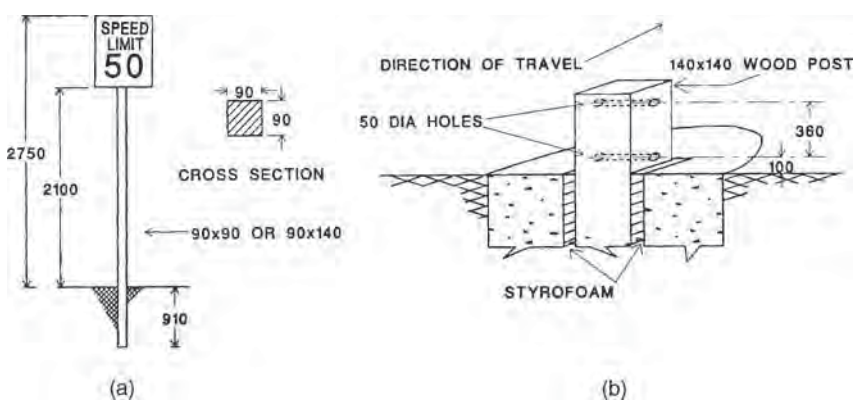

FIGURE 7.12 Typical installation of wooden sign supports. (*a*) Direct burial. (*b*) In concrete. Dimensions shown as mm. Conversions: 50 mm = 2 in, 100 mm = 4 in, 140 mm = 6 in, 360 mm = 14 in, 910 mm = 3 ft, 2100 mm = 7 ft, 2750 mm = 9 ft.

www.EngineeringEBooksPdf.com

Some states have used larger shaped wooden posts, such as 6 in × 8 in (140 mm × 215 mm), with appropriately sized holes to reduce the cross-section area. These holes provide a weak section that appears acceptable, but the increased mass of these posts and lack of testing result in unpredictable impact performance. Shaped wooden posts larger than those that have been crash-tested should not be used. If larger posts are required, then a multiple-post configuration, slip base design, or other alternatives should be used.

Engineered Wood Posts. A number of relatively new products have been developed for use as sign supports. These include engineered wood product posts made from recycled plastics and wood chips, and laminated veneer lumber posts. The Microllam laminated posts in 8 in × 8 in (200 mm × 200 mm) and in 15 in × 8 in (380 mm × 200 mm) have been accepted for use. These posts, manufactured by the Trus Joist MacMillan Corporation, have a wall thickness of 1.25 in (32 mm) and mitered 45° corners. The post is placed in predrilled holes and backfilled. The posts require four 1-in-diameter (25-mm) holes drilled on the two sides parallel to the direction of travel. Two of the holes are at 3 in (76 mm), and the other two holes are at 18 in (457 mm) above ground height. A saw cut parallel to the ground that connects each set of holes is required.

Timber Poles. The majority of wooden sign-support systems consist of square or rectangular shapes. However, round timber poles, up to 7.5 in (190 mm) in diameter of southern pine, grade 2, have been accepted for use by the FHWA [25, 26]. The acceptable sizes and required holes to provide acceptable breakaway performance are presented in Table 7.4.

TABLE 7.4 Timber Wood Post Requirements

a. Requirements in U.S. Customary units		
Timber post diameter, in	Required hole size, in*	Effective area, in^2
4.0	None	0.126
4.5	None	0.160
5.0	None	0.197
6.0	0.75	0.239
6.5	1.25	0.251
7.0	2.00	0.246
7.5	2.75	0.240
b. Requirements in SI units		
Timber post diameter, mm	Required hole size, mm*	Effective area, mm^2
100	None	81
115	None	103
127	None	127
150	19	154
165	32	162
178	51	159
190	70	155

*Holes are centered at approximately 4 in (100 mm) and 18 in (460 mm) above ground, with their axes horizontal and in a plane parallel to the sign face.

www.EngineeringEBooksPdf.com

7.3.5 Square Steel Tubes

Square steel-tube sign supports are used in many localities. They provide four flat surfaces for mounting sign panels, facing different directions, without special hardware as required by some support types. Square-tube supports can be purchased from a number of manufacturers and are available with 7/16-in (11-mm) holes or knockouts at 4-in (25-mm) centers on all sides [26, 27, 28]. The square tubing is available in ¼-in (6.4-mm) incremental sizes from 1.5 in × 1.5 in (38 mm × 38 mm) to 2.5 in × 2.5 in (64 mm × 64 mm). Maximum sign areas for various square-tube sizes and strengths are illustrated in Table 7.5.

Square tubing can be driven directly into the ground using a drive cap with sledge or power equipment. The performance of the support assembly upon impact, and subsequent repair, are enhanced by using an anchor base. Three common methods of installing a single square-tube sign support are presented in Fig. 7.13. Figure 7.13*a* shows a direct burial installation. Square tube up to a maximum size of 2.25 in × 2.25 in (57 mm × 57 mm) has been approved for installation by direct burial. The performance of square-tube sign supports upon impact is more predictable, and easier to repair, by the use of an anchor base system [29]. Figure 7.13*c* shows an anchor base system where a 36-in-long (900-mm) piece of square tube, one size larger than the anchor piece, is driven into the ground. This anchor piece is left protruding 1 to 2 in (25 to 50 mm) above the ground to permit bolting of the signpost. The signpost is inserted 6 to 8 in (150 to 200 mm) into the anchor piece and bolted in place. Figure 7.13*b* shows a device similar to the anchor base installation except that it uses an outer stiffener sleeve one size larger than the 36-in-long (900-mm) anchor base piece. The stiffener sleeve provides a double-walled thickness that reduces damage to the anchor piece. Upon impact, the post yields at the top of the anchor assembly, normally leaving it undamaged as in Fig. 7.14.

Square steel tubes with perforations on all four sides have been found to provide acceptable crash performance for sizes as large as 2.5 in × 2.5 in (64 mm × 64 mm) when embedded directly into the soil. They are acceptable in both strong and weak soil when embedded to a depth of 48 in (1220 mm). Repairing direct-embedment supports,

TABLE 7.5 Maximum Sign Area for Square Steel-Tube Single-Support Posts

a. Area in U.S. Customary units for 70-mi/h wind, ft^2							
	Height from ground to center of sign, ft						
Post size, in*	6	7	8	9	10	11	12
2 × 2 (12 ga)	8.4	7.0	5.9	5.0	4.3	3.6	3.1
2.5 × 2.5 (12 ga)	14.8	12.5	10.7	9.2	8.0	7.0	6.1
2.5 × 2.5 (10 ga)	19.0	15.3	13.1	11.4	10.0	8.8	7.7
b. Area in SI units for 113-km/h wind, mm^2							
	Height from ground to center of sign, mm						
Post size, mm†	1830	2135	2440	2745	3050	3350	3360
51 × 51 (12 ga)	0.8	0.7	0.5	0.5	0.4	0.3	0.3
64 × 64 (12 ga)	1.4	1.2	0.9	0.9	0.7	0.7	0.6
64 × 64 (10 ga)	1.7	1.4	1.2	1.1	0.9	0.8	0.7

*Based on 39-kip/in^2 minimum yield point steel.

†Based on 275-MPa minimum yield point steel.

www.EngineeringEBooksPdf.com

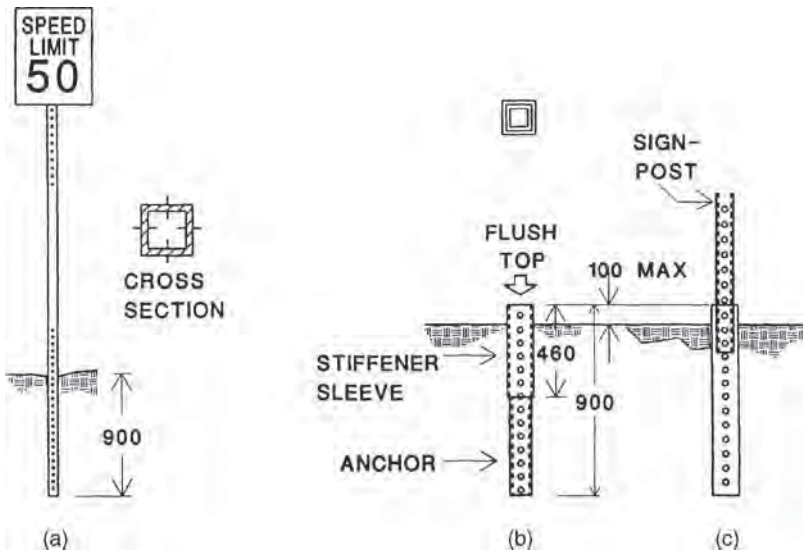

FIGURE 7.13 Square-tube sign-support system. (*a*) Direct burial. (*b*) Stiffener sleeve anchor. (*c*) Anchor assembly. Dimensions shown as mm. Conversions: 100 mm = 4 in, 460 mm = 8 in, 900 mm = 36 in.

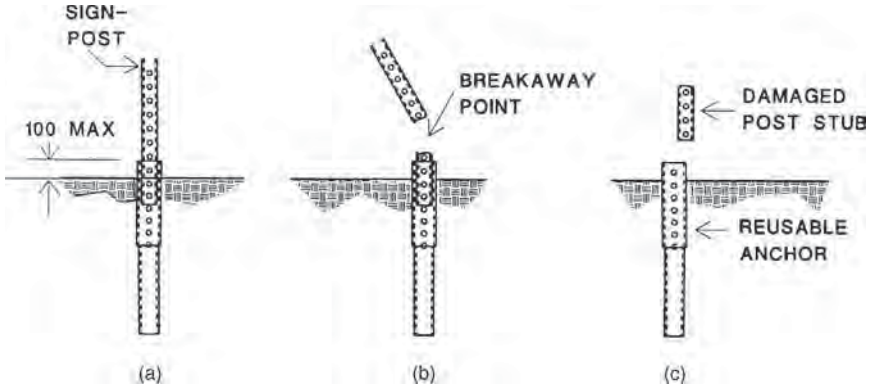

FIGURE 7.14 Typical square-tube damage with stiffener sleeve anchor assembly. (*a*) Prior to impact. (*b*) Breakaway action. (*c*) Removal of broken stub. Dimensions shown as mm. 100 mm = 4 in.

however, is more difficult than repairing the yielding breakaway system. The V-loc system from Foresight Industries can also be used as an anchor system for square-tube supports.

Figure 7.15 shows anchor systems for square tubing that are manufactured by Unistrut Corporation. Figure 7.15*a* shows a heavy-duty breakaway anchor for use with 2-in and 2.5-in (50-mm and 64-mm) square tubes. It consists of a 3/16-in-thick (4.8-mm) wall that eliminates the need for a stiffness sleeve and allows the signpost to break away on impact without damaging the anchor wall. Figure 7.15*b* shows an anchor post that can be driven directly into extremely hard or rocky soil conditions. It is made

www.EngineeringEBooksPdf.com

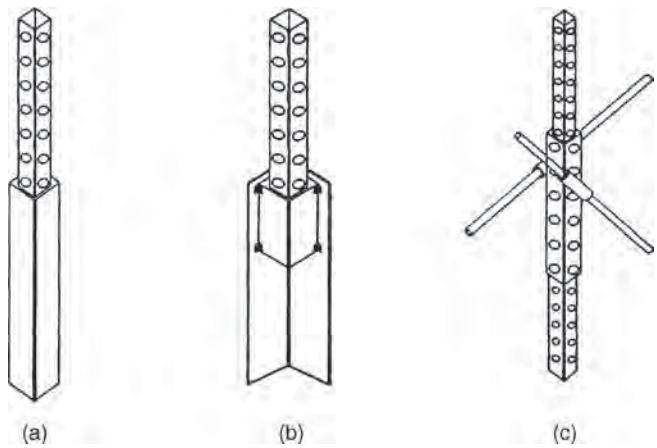

FIGURE 7.15 Anchor systems manufactured by Unistrut Corp. (*a*) Heavy-duty anchor. (*b*) Anchor post. (*c*) Stabilization anchor.

from 1/4-in × 4-in (6.4-mm × 102-mm) steel angle section that can help stabilize the sign assembly in soil conditions that provide poor resistance to lateral and torsional forces. Figure 7.15*c* shows a stabilization anchor sleeve that helps adjust for inconsistent roadside gradients. The anchor rods help resist the environmental loads that can cause the signpost to lay over or twist in soft or shoulder dropoff conditions. The stabilization sleeve is installed over an anchor piece and the two rods inserted at a 45° angle to increase stability.

Figure 7.16 presents a soil stabilization anchor manufactured by Xcessories Squared [30]. The stabilizer is attached with a corner bolt, through the lower slots, to an anchor piece of square tube. The tops of the stabilizer piece and anchor are aligned and the

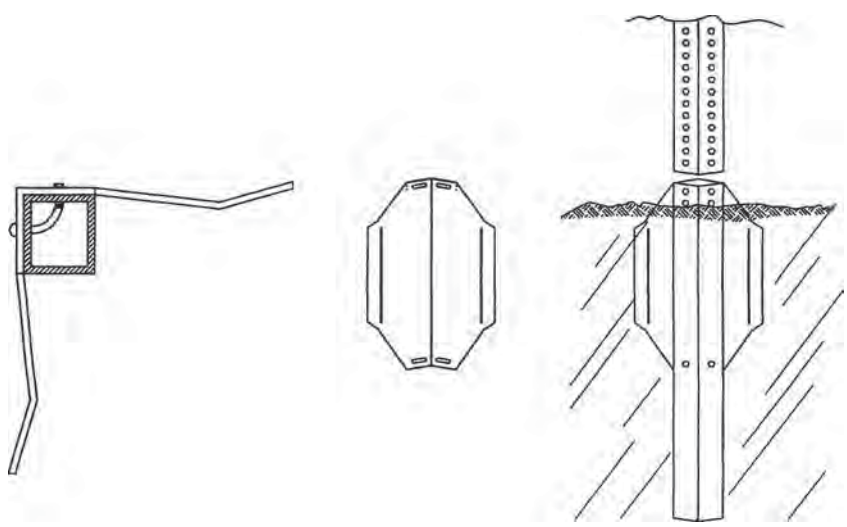

FIGURE 7.16 Anchor system manufactured by Xcessories Squared.

www.EngineeringEBooksPdf.com

assembly is driven into the ground until only 2 in (50 mm) remains above the ground surface. After the bottom end of the signpost is inserted 8 in (200 mm) into the anchor assembly, it is secured with a corner bolt from the back side, through the stabilizer, anchor, and signpost.

7.3.6 Steel-Pipe Posts

Steel-pipe posts are frequently used in urban areas and have the advantage of being readily available. They require special fastening hardware, and an earth plate when directly embedded, to prevent the post from rotating from its intended position. Standard steel pipe, schedule 40, galvanized, is readily available from plumbing supply wholesalers. The maximum sign panel areas that can be mounted on the 2-in- and 2.5-in-internal-diameter (51-mm and 64-mm) standard steel pipe are listed in Table 7.6.

Round steel supports, made from standard schedule 40 pipe, that have an internal diameter (ID) of less than 2 in (50 mm) can be embedded directly into the ground to a depth of at least 42 in (1070 mm) and provide acceptable performance upon impact. A steel earth plate measuring 4 in × 12 in × 0.25 in (100 mm × 310 mm × 6 mm) should be welded or bolted to the pipe to prevent support rotation due to the wind.

Standard schedule 40 pipe, 2-in (50-mm) ID and larger, is no longer approved for direct burial installation and must be installed with a weakening device [31]. A breakaway collar assembly is required for standard schedule 40 pipe sizes, equal to or greater than 2-in (50-mm) ID, and also for smaller pipe sizes when the device is likely to be hit. A regular pipe coupling or reducing coupling will provide acceptable breakaway performance. The use of a pipe coupling will, however, frequently result in damage to the anchor piece. Therefore the reducing coupling is the preferred breakaway device. The anchor assembly consists of a concrete footing, usually 30 in (760 mm) deep by 12 in (300 mm) in diameter and a 24-in-long (610-mm) piece of anchor pipe. The anchor pipe is usually one size larger than the signpost to prevent damage to the anchor and to allow use of the reducing coupling. The possibility of damage to the anchor post can be further reduced by embedding the reducing coupling halfway into the concrete footing.

Round steel tube, in wall thicknesses of 12 gauge or less, can be used with anchor systems instead of standard schedule 40 pipe. These tubes are available from a number of manufacturers. Southwestern Pipe Inc. is one tubing manufacturer that also markets the Poz-Loc anchor system. This system consists of a tubular anchor socket with 2.5-in (64-mm) ID and 27 in (686 mm) long constructed of 12 gauge steel. The socket is pointed to facilitate driving into the ground and accepts a 2-in-ID (50-mm) steel round tube as the sign support. The sign support is held in place by driving a post wedge between the socket

TABLE 7.6 Maximum Sign Area for Standard Steel-Pipe Single-Support Posts

a. Area in U.S. Customary units for 70-mi/h wind, ft^2	
Internal diameter post size, in	Maximum sign area, ft^2
2.0	6.5
2.5	11.8
b. Area in SI units for 113-km/h wind, m^2	
Internal diameter post size, mm	Maximum sign area, m^2
50	0.6
64	1.1

www.EngineeringEBooksPdf.com

and the support. Should the post be damaged, the wedge can be removed, another post inserted, and the wedge replaced without disturbing the anchor socket. The wedge requires the use of a special puller for removal, which reduces vandalism to the sign system.

7.4 SLIP BASE DESIGNS

Slip base designs for small sign supports consist of two components: (1) the anchor assembly up to the bottom of the slip base, and (2) the sign support, containing the top of the slip base on the lower end and the sign panel on the upper end. Small sign slip bases are categorized as unidirectional or multidirectional.

Slip base designs allow the use of stronger sign supports than can safely be achieved by base-bending or fracture designs. The anchor piece of slip base designs is fixed into a foundation and should remain immovable during an impact. The sign support is connected to the anchor piece with bolts through a plate, which are attached to a similar plate on the anchor piece. The holes in the plates are slotted. When a vehicle impacts the sign support, the top plate, which is attached to the sign support, slides along the bottom plate until the bolts slide free of the slots. Inclined slip base designs, or designs with raised center cones, cause the sign support to move upward to allow the impacting vehicle to pass under the sign without being hit on the windshield by the sign during high-speed impact.

When slip base designs were first used, problems were encountered with assemblies that came apart without an impact. This was due to the wind and ice loads vibrating the assembly and causing the bolts to "walk" out of the slots, as in Fig. 7.17. This problem was solved by using a thin (0.04 to 0.02 in or 1.0 to 0.5 mm) keeper plate to ensure that the bolts remain properly located in the slots. During an impact, the bolts tear through the thin keeper plate as they slide free of the slots.

FIGURE 7.17 Loose slip base caused by vibration.

www.EngineeringEBooksPdf.com

FIGURE 7.18 Installation of unidirectional slip base.

7.4.1 Unidirectional Slip Bases

Unidirectional slip bases for small sign supports consist of inclined slip bases, as shown in Fig. 7.18. The upper support piece is made from rolled-steel shapes, standard pipe, or structural tube. The base of the support assembly is inserted into a concrete footing to prevent movement of the anchor assembly.

The upward thrust obtained from the inclined slip base design is important to the proper action of a single-support sign system. The upward thrust causes the sign panel and support to rise and rotate when vehicle impact separates the mechanism. The sign panel and support stay together as a unit, which passes up and over the vehicle and lands behind it. This action is obtained only when the support is impacted from one direction. An impact from the opposite direction actually pulls the sign support downward, causing the support and sign panel to rotate toward the vehicle. Inclined slip bases should not be used where impact from more than one direction is expected. Horizontal slip bases will separate when impacted from the front or the rear but will not provide the uplift capability obtained from inclined-base designs. A typical design for an inclined slip base is provided as Fig. 7.19.

Horizontal slip bases, discussed in Art. 7.5.2, are not recommended for single sign supports. When impact can be expected from more than one direction, a multidirectional slip base design should be used.

7.4.2 Multidirectional Slip Bases

The multidirectional slip base design operates on the same principle as the inclined slip base design. The multidirectional design consists of a triangular slip base employing

www.EngineeringEBooksPdf.com

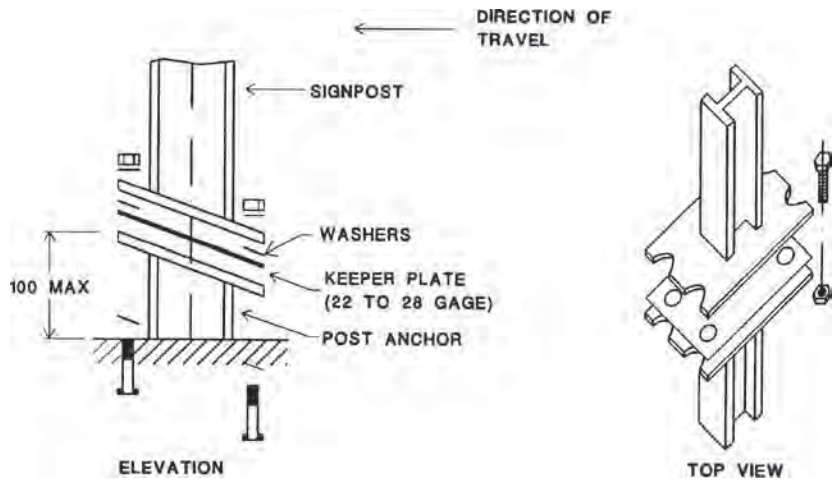

FIGURE 7.19 Typical inclined, unidirectional slip base. Dimensions shown as mm: 100 mm = 4 in.

only three slotted bolt holes, as presented in Fig. 7.20. The bolts are positioned at the flattened corners of the triangular plate. An impact from any direction slides the bolts out of the slots and allows the signpost to separate from the anchor piece. The desired lifting action is obtained by a lift cone located on the bottom plate. The sign support is tubular and beveled at the top triangular slip plate to help the lift cone push the support off the anchor plate during impact. The anchor piece is encased in concrete to prevent

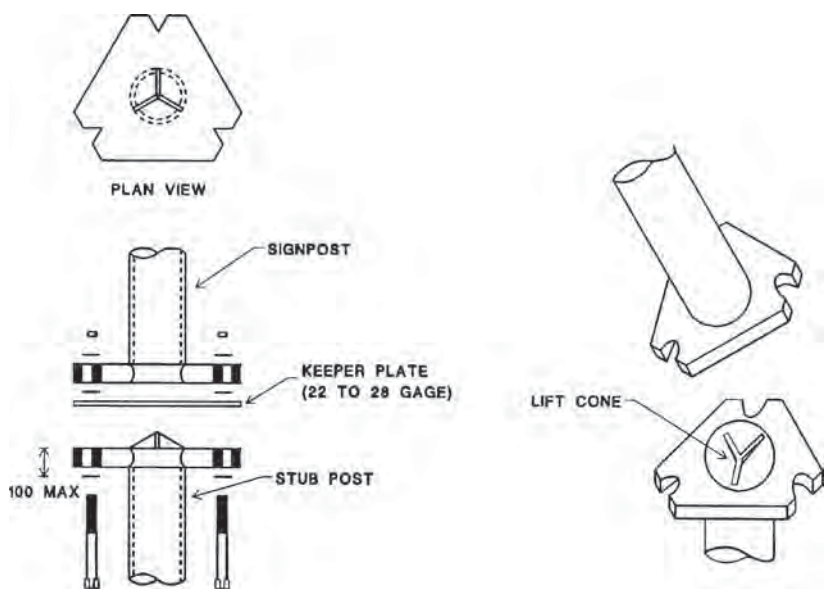

FIGURE 7.20 Details of multidirectional triangular slip base. Dimensions shown as mm: 100 mm = 4 in.

www.EngineeringEBooksPdf.com

FIGURE 7.21 Frangible-coupling sign support.

movement. The pipe generally used for multidirectional slip bases ranges from 3 to 5 in (75 to 127 mm) in diameter. The design specification for each size must be checked, since the required bolt size, torque requirements, and lift cone design are dependent upon the size of the sign support.

7.4.3 Frangible Couplings

Acceptable single–sign-support performance can be achieved with the use of frangible couplings and load concentration couplers (Fig. 7.21). These couplings are either fabricated from die cast aluminum or extruded from an alloy. The couplers are used as inserts that bolt the support post plate to the anchor piece plate. They present a weak point on the sign-support assembly that fractures upon impact. The majority of applications for frangible couplings are for multiple sign supports. These couplings are discussed more fully in Arts. 7.5.2 and 7.8.2.

7.4.4 Considerations in Design of Slip Bases

Failure of slip base designs to release properly can be due to the bolt torque, the gauge or thickness of the keeper plates, or the weight of the support. The following should be adhered to in the design of slip base supports:

- Horizontal and inclined slip bases can be constructed with wide-flange, standard-shape, and round signposts. Multidirectional designs are usually constructed with round signposts to enable the multidirectional rising action of the lift cone.

www.EngineeringEBooksPdf.com

TABLE 7.7 Round Sign-Support Sizes for Slip Base Designs Based on Sign Area

a. Size and area in U.S. Customary units	
Round post internal diameter, in	Total sign area, ft^2
2.0	0 to 4.0
2.5	4.0 to 8.0
3.5	8.0 to 20.0
4.0	20.0 to 36.0
b. Size and area in SI units	
Round post internal diameter, mm	Total size area, m^2
51	0 to 0.37
64	0.37 to 0.74
89	0.74 to 1.9
100	1.9 to 3.3

- The post should not weigh more than 45 lb/ft (67 kg/m), and the total weight of the support post, hardware, and sign panel should not be more than 600 lb (270 kg).
- The bolts clamping the top and bottom portions of the slip base together should not be tightened more than the specifications. Overtorquing creates high friction between the slip base elements and may prevent the post from releasing properly. The clamping force must be controlled by installing the bolts with a torque wrench, using torque-limiting nuts, or using designs that are not dependent upon specific torque requirements.
- Washers used with the clamping bolts must be of sufficient strength to prevent the washers from deforming into the plate slots when the bolts are tightened to specification.
- The stub height must be no more than 4 in (100 mm) above ground level at the highest point of the slip plate assembly.
- No bolts from the anchor piece should project into the upper support assembly.
- The choice of the proper sign-support type for slip base designs is dependent upon the wind load, sign panel size, and the criterion that the weight of the sign support and sign not exceed 600 lb (270 kg). As a general rule, the maximum sign area presented in Table 7.7 can be used in selecting the appropriate size of wind sign support. Determining the maximum sign size for areas with high wind loads, or for the selection of post sizes other than round shapes, should be performed with reference to state requirements.

7.5 DESIGN OF MULTIPLE-MOUNT SIGN SUPPORTS

Multiple-mount sign-support assemblies (Fig. 7.22) are required whenever the surface area or width of the sign is too large to withstand the wind and ice loads. Each state has guidelines, in the form of tables and graphs, that are used to select the size and numbers of supports required to withstand the prevalent environmental loads in different parts of the state. These guidelines should be used to determine the required size and number of supports. The design of multiple–sign-support assemblies requires considerations that

www.EngineeringEBooksPdf.com

FIGURE 7.22 Multiple-mount sign support.

in some instances differ from single–sign-support assemblies. These considerations include the following:

- Tests have demonstrated that vehicles leaving the roadway at an angle can strike more than one support if supports are spaced closer than 7 ft (2100 mm). If two supports are spaced less than 7 ft (2100 mm) apart, they must pass a crash test as a dual support assembly. Installing two acceptable single sign supports does not guarantee acceptable multiple-support performance.
- For multiple supports, the sign panel itself is an important part of the sign structure during impact. Depending upon the design, the sign panel must carry the weight of the impacted support and/or provide sufficient rigidity to enable the hinge mechanisms to activate. The sign panel must be made of material of sufficient thickness that it does not break into pieces when a support is impacted.
- Acceptable performance in multiple-support systems requires the sign panel to remain attached to the support(s) that are not impacted. This intended performance can be destroyed by:

  The use of bolts to fasten the sign panel that are too small

  The absence of washers, which allows the bolt head to pull through the sign panel

  Sign panel bracing that will twist or break and therefore not transfer the sign weight to the undamaged support(s)
- Slip base mechanisms must be designed with the proper sized bolts and washers. Bolts that are too small may not withstand the wind load forces. Oversized bolts can result in binding or friction forces between the base plates. Washers that are too small can deform into the slots and bind the plates together.
- Large multiple-support signs have a hinge mechanism that allows the support to swing upward upon impact. The hinge height should be at least 7 ft (2100 mm) above

www.EngineeringEBooksPdf.com

the base plate to allow vehicles to pass beneath the hinge point. The sign panel, or any auxiliary sign panels, should not be mounted below the hinge mechanism.

- Hinged multiple sign supports are generally designed to operate safely when impacted from one direction (they are unidirectional). They can be made bidirectional by selecting the proper hinge arrangement.
- Two posts within a 7-ft (2100-mm) path should each have a mass that does not exceed 18 lb/ft (27 kg/m).
- Supplemental signs or horizontal members between the supports and below the hinge should not be used.
- Multiple-support systems that are designed with anchor bases should have a maximum of 4 in (100 mm) from the ground to the highest part of the anchor. This will prevent small vehicles from snagging the undercarriage on the anchor.
- Selection of unidirectional, bidirectional, or multidirectional support assemblies should be based on the possible directions from which the signs can be impacted. Unidirectional assemblies will not function correctly unless impacted from the front along the longitudinal axis of the slotted bolt holes. Bidirectional assemblies will function properly when struck from the front or the back. Impacts can be expected to occur from both travel directions in all cases except roadside sign supports located on the right side of divided roadways that have wide medians or positive median barriers. Bidirectional or multidirectional support assemblies should be considered for:

  Signs placed in the median that are within the clear recovery area of the opposite direction of travel

  Signs placed on two-lane roadways or undivided multilane roadways

  Signs placed near ramp terminals or intersections where impact could occur from any approach.

The majority of support types approved for use as single sign supports are approved for multiple installation. The approved usage as multiple supports, however, often requires the use of breakaway designs and a limit on the number of supports allowed within a 7-ft (2100-mm) distance of each other. Dual and triple installation refers to installing two and three supports, respectively, within a 7-ft (2100-mm) radius distance of each other. Acceptance of multiple–sign-support systems is based on the same vehicle deceleration characteristics used for single sign supports except that all of the supports within the 7-ft (2100-mm) path are impacted. Selection of approved multiple sign supports, therefore, requires knowledge of the number of supports required and the associated systems approved for use by FHWA.

Multiple–sign-support assemblies are required for signs with large surface areas but also for wide signs. For example, a guide sign 5 ft × 2 ft (1525 mm × 610 mm) has a small sign area but will need more than one support to prevent the sign assembly from being damaged due to environmental loads. Sign panels that have relatively small surface areas but require multiple supports because of their shape can generally use two smaller-size supports than would be required if they were installed with a single support.

7.5.1 Approved Single Supports for Multiple-Support Assemblies

There are few single-support systems that can be buried directly and provide acceptable multiple-support performance upon impact. Two such systems are dual 3-lb/ft (4.5-kg/m) U-channel and dual 4-in × 4-in (90-mm × 90-mm) shaped wooden posts. The majority of single-support adaptations to multiple-support assemblies require the use of anchor pieces and breakaway designs. Triple supports consisting of 1.75-in × 1.75-in (45-mm × 45-mm) square perforated tube and triple 2.5-lb/ft (3.7-kg/m) U-channel

www.EngineeringEBooksPdf.com

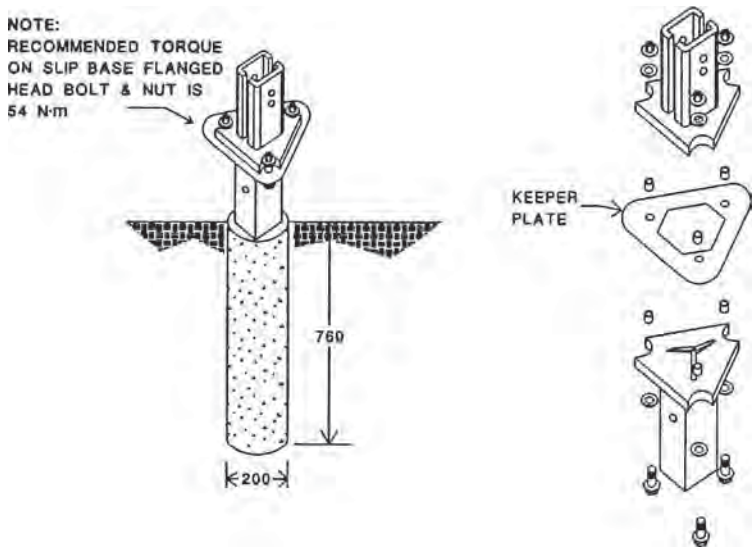

FIGURE 7.23 Acceptable slip base breakaway device for multiple–square-tube sign assemblies. Dimensions shown as mm. Conversions: 200 mm = 8 in, 760 mm = 30 in, 54 N·m = 40 ft·lb.

are acceptable when installed with an anchor and breakaway design. Manufacturers are developing devices that enable the use of heavier supports for acceptable multiple-support systems. Figure 7.23 presents a slip base breakaway assembly for square-tube supports manufactured by Unistrut Corporation, which is acceptable for three 2.5-in × 2.5-in (64-mm × 64-mm) supports within a 7-ft (2100-mm) path [32]. The bottom subassembly is inserted into a 30-in (760-mm) anchor piece and placed in an 8-in-diameter (200-mm), 30-in-deep (760-mm) concrete foundation.

Multiple supports for large signs are often constructed as slip base designs with galvanized steel wide-flange (W) or American Standard (S) shapes for the sign support. These shapes, depicted in Fig. 7.24, are designated by their depth and unit weight or mass. For example, a W150 × 18 is a wide-flange shape with a depth of 6 in (150 mm) and a unit weight (mass) of 12 lb/ft (18 kg/m).

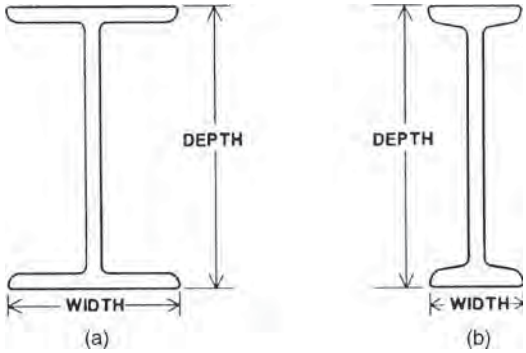

FIGURE 7.24 Examples of rolled-steel shapes for sign supports. (*a*) Wide-flange (W) shape. (*b*) American Standard (S) shape.

www.EngineeringEBooksPdf.com

Multiple–support-sign assemblies that are constructed of W and S shapes are frequently designed with frangible or load concentration couplers. The behavior of these designs is similar to slip bases except that, instead of the base slipping from between the bolts, the couplers, which are used in place of the bolts, break at impact.

7.5.2 Multiple-Support Slip Base–Coupler Designs

Inclined slip base designs, commonly used for single sign supports, cause the sign to rise up upon impact and allow the vehicle to pass beneath the sign. In a multiple–sign-support system, each support is fastened to the other supports by the sign panel and any existing sign panel bracing. When an inclined slip base is used on multiple-support assemblies and only one support is struck, the sign panel stops the impacted support from moving upward. As a result, the slip base can become locked, or the sign panel torn from the other supports, causing intrusion of the panel or support into the vehicle. Inclined slip bases should be used only for multiple-support assemblies when all supports are within 6 ft (1800 mm) of each other. The horizontal slip base (Fig. 7.25) and the frangible coupler (Fig. 7.21) are the most frequently used designs for multiple-support systems. The horizontal slip base design, details of which are shown in Fig. 7.26, operates through separation of the top plate from the anchor plate.

Frangible coupling designs, presented in Fig. 7.27, are designed to effect separation from the anchor plate by fracturing the couplings. Figure 7.27*a* presents a load concentration design in which the small cross-sectional area, at the necked-down portion of the coupling, breaks at impact. Figure 7.27*b* presents a frangible aluminum coupling, by Transpo Industries, designed to break upon impact. The couplings are available in

FIGURE 7.25 Installation of horizontal slip base.

www.EngineeringEBooksPdf.com

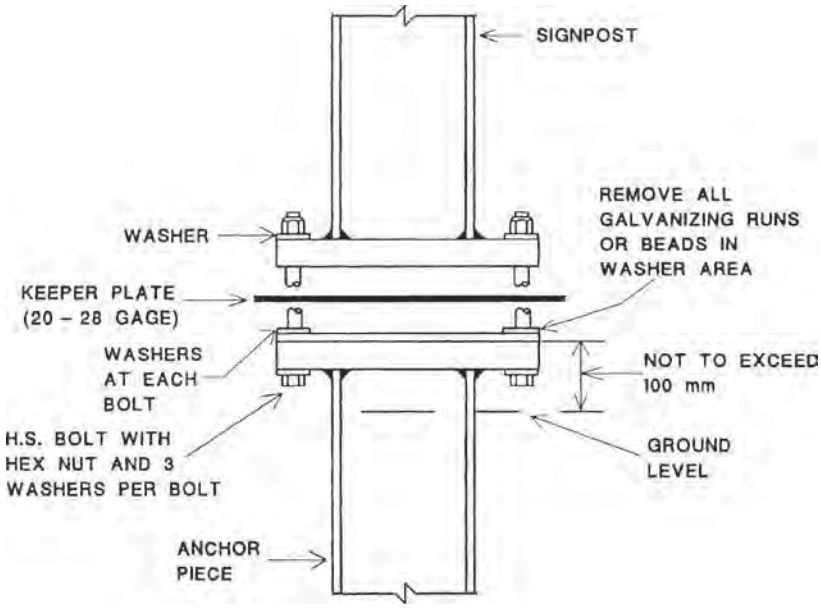

FIGURE 7.26 Design details of horizontal slip base. Dimensions shown as mm: 100 mm = 4 in.

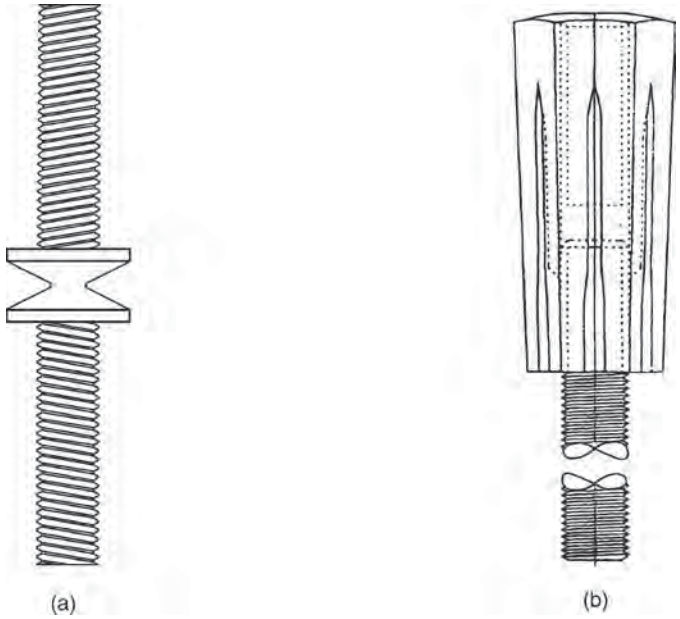

FIGURE 7.27 Examples of couplers. (*a*) Load concentration type. (*b*) Frangible type.

www.EngineeringEBooksPdf.com

FIGURE 7.28 Base with load concentration couplers.

different sizes, designs, and resistance to fracture. Figure 7.28 presents a frangible coupler application for a large sign support. Notice the low profile of this design. The only portions of the sign assembly above ground level are the frangible couplings, so that the possibility of snagging the vehicle undercarriage is practically eliminated.

Horizontal slip base and coupler designs are intended to safely operate by allowing the vehicle to pass under the sign and support assembly upon impact, as presented in Fig. 7.29. This is accomplished by providing a hinge at least 7 ft (2100 mm) from the bottom anchor plate to allow the support to swing away.

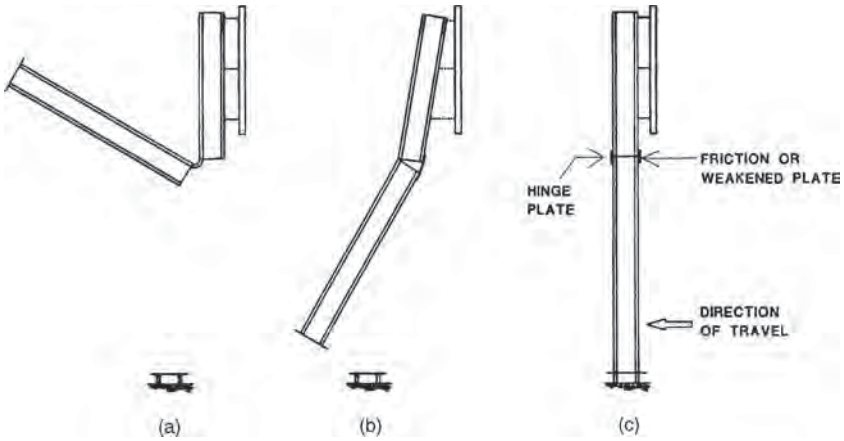

FIGURE 7.29 Illustration of hinge action for large multiple-support sign. (*a*) Vehicle passes under. (*b*) Hinge activates. (*c*) Vehicle impact.

www.EngineeringEBooksPdf.com

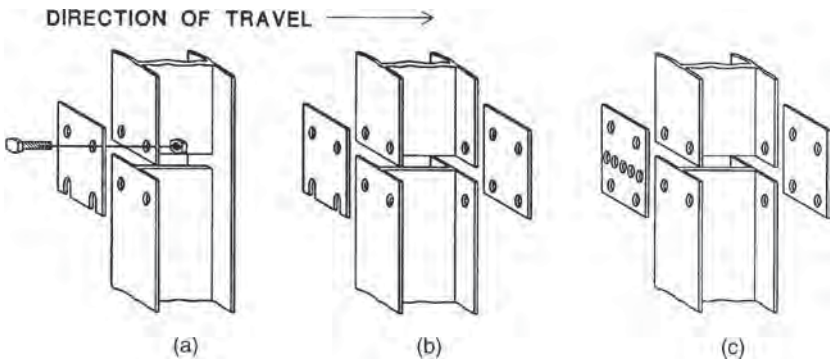

FIGURE 7.30 Common hinge designs used for large multiple supports. (*a*) Saw-cut support with front plate. (*b*) Saw-cut support with front plate and rear hinge plate. (*c*) Saw-cut support with weakened front plate and rear hinge plate.

7.5.3 Hinge Plate Designs

There are three basic types of hinge designs. One type, illustrated in Fig. 7.30*a,* develops a hinge by cutting through all but the back flange. The front flange is connected with a slotted plate known as a friction plate. When the post is struck, the friction plate separates from the slotted bolt holes as the back flange bends. This type of hinge creates a maintenance problem, since the post is destroyed and must be replaced after each impact. It is also more difficult to predict the resistance of the hinge, which is dependent upon the post size and depth of cut.

Another type (Fig. 7.30*b*) utilizes a rear hinge plate. This plate is similar to the friction plate but does not have slotted bolt holes. With this type of hinge, the sign support is completely cut in two pieces, with the hinge plate bolted on the back and the friction plate on the front. When impacted, the friction plate releases through the slotted bolt holes and the hinge plate bends back. Maintenance after impact is simplified, since the hinge plate can be removed and the upper and lower support pieces reused with a new hinge plate. Proper operation of the friction plate design is dependent upon proper bolt size and torque. If the bolts are too small, or not torqued sufficiently, wind loads will cause the friction plate to become loose and the top of the sign to fall back. If the bolts are too large or torqued too much, the support will not separate properly upon impact [45].

The third hinge type (Fig. 7.30*c*) utilizes a rear hinge plate and a front hinge plate with a weakened section. When impacted, the section fractures through the plane of the holes, thus permitting the back hinge plate to bend. This design has an advantage over the friction-hinge plate design while remaining easy to repair. The advantage is that the torquing requirements on the friction plate are not critical for proper operation. The front hinge plate in Fig. 7.30*c* is weakened by drilling holes so that only 33 percent of the plate material remains. Figure 7.31 shows commercially available frangible hinge plates available from Transpo Industries. The three hinge systems presented in Fig. 7.30 are unidirectional and should not be used in areas requiring bidirectional performance. Only the Transpo hinge system offers bidirectional performance.

7.5.4 Improved Base Devices

A number of manufacturers have developed products so that the anchor piece can be placed almost flush with the ground. These products can be used either to retrofit

www.EngineeringEBooksPdf.com

FIGURE 7.31 Commercially available hinge plates by Transpo Industries.

existing slip base designs or for new installations. One such manufacturer is Transpo, which markets the Breaksafe breakaway system for ground-mounted signs. These devices use breakaway couplings and brackets designed for different support types and sizes. Included are back-to-back concrete and direct buried U-channel, 3- to 4½-in (75- to 114-mm) round pipe, 3- to 5-in (75- to 127-mm) square tube, and various sizes of wide-flange and standard beam shapes. The advantage of the retrofit is that proper torquing, to prevent blowdown or walking due to environmental loads, yet permitting slip during vehicle impact, is not required with the frangible coupling retrofit.

7.6 MAINTENANCE AND CONSTRUCTION OF SIGN SUPPORTS

An important element of a safe highway environment is the proper construction and maintenance of traffic signs. Good designs and the best of materials will not be effective in reducing accident potential or severity if the traffic signs are improperly placed or installed. This requires that field crews be knowledgeable of proper installation techniques and that they report and correct any possible problems instead of merely placing the signs at the roadside. (See also Art. 7.1.2.)

7.6.1 Proper Placement

Important considerations for proper placement include the following:

- Warning signs should be placed sufficiently in advance that the driver has adequate time to perceive, identify, decide, and perform any necessary maneuver. A guide for the placement distance of warning signs is contained in *MUTCD* [2].

www.EngineeringEBooksPdf.com

- The *MUTCD* provides guidelines on the height and lateral placement of typical sign installations. Signs installed on the side of the road in rural districts should be at least 5 ft (1500 mm) measured from the bottom of the sign to the near edge of pavement. In urban districts or where parking or pedestrian movements occur, the clearance to the bottom of the sign should be at least 7 ft (2100 mm). Ground-mounted signs on freeways and expressways should be at least 7 ft (2100 mm) above the level of the pavement edge and have the minimum lateral offset of 12 ft (3700 mm) from the edge of the traveled way. If a shoulder wider than 6 ft (1800 mm) exists, the minimum lateral offset for ground-mounted signs should be 6 ft (1800 mm) from the edge of the shoulder.
- All sign assemblies located within the traversable area must be capable of giving way safely upon impact. This requires that the maximum vehicle deceleration does not exceed 16 ft/s (5 m/s) and that the sign assembly does not protrude into the passenger compartment [14].
- Sign supports installed with anchor systems must have a maximum height of 4 in (100 mm) from ground level to the topmost part of the anchor.
- Most sign-support assemblies are designed to function properly when impacted at bumper height, typically about 20 in (500 mm) above the ground. If impacted at a higher point, the assembly may bind at the planned shear point resulting in nonactivation of the breakaway mechanism. For this reason, it is critical that breakaway sign assemblies not be located near ditches or on steep slopes or other locations where the vehicle can become partially airborne at the time of impact.
- Sign supports should not be placed in ditches. The water in the ditch can erode the soil around the base of the support, cause premature deterioration of the post, and freeze, resulting in unpredictable performance during impact. The ditch can also act as a guideway that directs errant vehicles into the sign assembly.
- Sign-support assemblies are tested in both strong and weak soils. Supports that are designed to yield, or fracture, upon impact generally perform better in strong soil. Strong soil holds the buried portion in position, providing sufficient resistance for the sign support to break near ground level. Weak soils do not provide this resistance, but permit movement within the ground and unpredictable results. Yielding or fracturing supports that are embedded less than 40 in (1000 mm) in weak soil will often pull out of the soil. While this may provide acceptable impact performance, the force of the wind and ice loads may cause the sign assembly to rotate or fall down. The actual soil type that is present may not be known until the start of installation. Weak soils are those that offer relatively little resistance to driving the signpost. If weak soils are encountered, there are measures that can be taken to maintain sign orientation in the face of environmental loads and still result in proper operation during impact. These include embedding the signpost to 40 in (1000 mm), and the use of anchor plates, concrete footings, and commercially available anchor systems [34].
- Single–sign-support systems are designed to operate safely when only one support is struck upon impact. Tests have shown that an errant vehicle, leaving the roadway at an angle, can impact more than one support if supports are not separated by more than 7 ft (2100 mm). This separation applies to other fixed objects as well as signposts. For example, a 3-in-diameter (75-mm) tree is sufficiently small to provide acceptable impact performance. Installing a sign support 6.5 ft (2000 mm) from this tree, however, can result in an errant vehicle's impacting both the tree and the signpost. The combined effect of the tree and sign can provide unacceptable impact performance.
- Multiple-mount sign supports are required to support sign panels that are too large to withstand wind and ice loads with the use of only one support. Multiple-mount

www.EngineeringEBooksPdf.com

sign supports are designed to provide acceptable performance upon impact when the supports are placed 7 ft (2100 mm) or closer to each other. This close spacing results in the possibility that a vehicle leaving the roadway at an angle will impact two or more supports simultaneously. This possibility means that some supports approved for use in a single-support system are not approved for multimount designs. Support configurations that have not been approved for use as multiple-mount systems should not be used for multimount sign supports until they have been approved by the FHWA.

- Study the traffic patterns and surrounding geometrics prior to installing any sign. If the sign assembly can be expected to be struck from more than one direction, then a unidirectional slip base design is an improper choice. Two-lane rural roadways should use roadside supports that function safely when impacted from two directions. Installations on freeways, with wide medians or positive median barriers, can be expected to be impacted from only one direction.
- In summary, be aware of what is required for sign installations to function properly for both the environmental loads and vehicle impact. Do not install a device simply because it has been specified on the sign order. The actual site conditions may have been unknown, or different from what was expected by the designer who specified the type of sign assembly. If problems are identified, contact a supervisor to determine if changes should be made.

7.6.2 Single-Support Installation

The correct installation of sign-support assemblies is dependent upon the type of support post, the type of soil present, and the impact performance design of the sign assembly. Installation instructions are contained in standard state drawings and, for proprietary devices, from signpost manufacturers. Proper installation practices for the most common types of single support assemblies are presented in subsequent sections.

U-Channel Posts. The most common method of installing U-channel posts is by direct burial. The burial can be achieved by mechanical post drivers, by sledgehammer, or by digging a hole and backfilling. If the post is to be placed by driving into the ground, then a driving cap should be used to prevent damage to the end of the U-channel. Drive or place the posts at least 3 ft (900 mm) but no more than 3.5 ft (1100 mm) into the ground to make it easier to pull out damaged posts.

U-channel posts can also be installed as two-piece assemblies consisting of an anchor base and the post support. The advantage of the two-piece assembly is that the post will break off from the anchor piece upon impact. This often improves safety upon impact, makes repairs easier, and makes it possible to salvage portions of a damaged U-channel post. An anchor base assembly is especially advantageous when the post is placed in a paved area, such as a concrete median. The anchor piece should not extend more than 4 in (100 mm) above the ground to prevent snagging the vehicle undercarriage.

The anchor piece can be directly driven, buried 3 ft (900 mm) in the ground, or embedded 2 ft (610 mm) in a concrete foundation that is 8 in (200 mm) in diameter and 2.5 ft (760 mm) deep. The signpost can be attached to the anchor piece by a generic splice or the use of commercially available devices.

Figure 7.32 presents a generic method of attaching the signpost to the anchor piece. The signpost overlaps the anchor piece by 6 in (150 mm) to provide stability against the environmental loads. Since the anchor piece cannot extend more than 4 in (100 mm) above the ground, this means that the signpost is at least 2 in (50 mm) below ground level. The signpost is placed behind the anchor stub, and the posts are attached together

www.EngineeringEBooksPdf.com

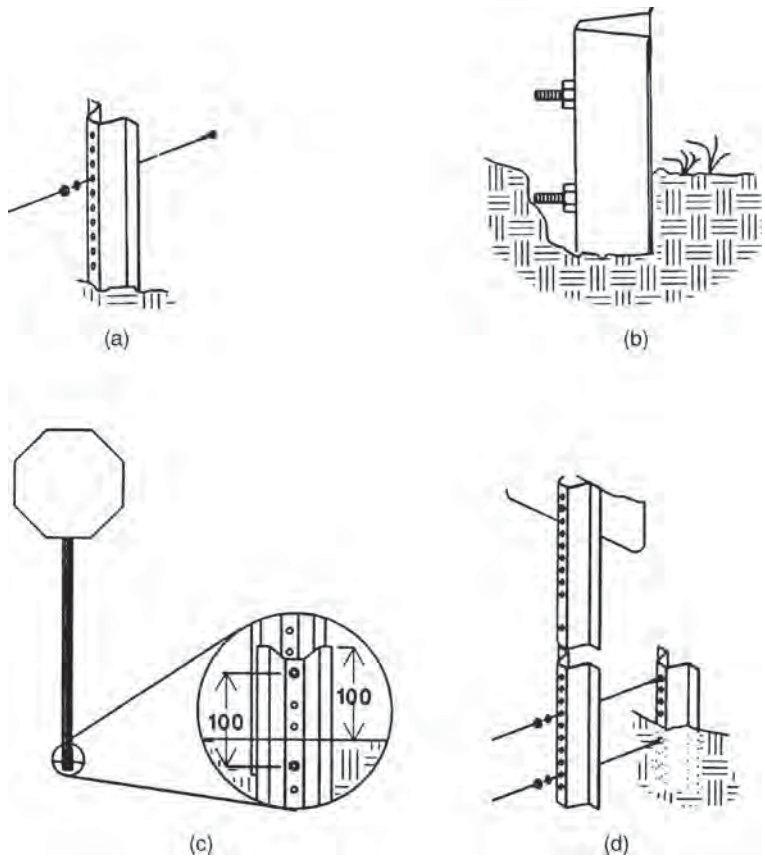

FIGURE 7.32 Generic method of splicing sign support to anchor piece. (*a*) Drive anchor post to within approximately 12 in (300 mm) from top of ground and install bolt with lock washer in fifth hole from top. (*b*) Drive post to 4 in (100 mm) or less from ground, and install bolt in first hole from back of post to allow room for sign post to be attached. (*c*) Install bolts 4 in (100 mm) apart with ground stub no higher than 4 in (100 mm) above ground. (*d*) Place signpost behind anchor stub, place bolts through first and fifth hole of sign post, use cut washers, and tighten securely.

with two 5⁄16-in (8-mm) bolts spaced 4 in (100 mm) apart. Extra 5⁄16-in (8-mm) nuts are used as spacers between the two post pieces to prevent binding during impact.

A number of commercial splicing devices for installing two-piece U-channel assemblies are also available. Figure 7.33 provides installation information on the Eze-Erect system available from Franklin Steel, and Fig. 7.34 is information on the Minute-Man coupling from Marion Steel [35, 36].

The following guidelines should be followed for the installation and use of U-channel posts:

- If U-channel posts are driven into the ground, they should not be embedded more than 42 in (1100 mm), to make it easier to pull out damaged posts.
- Use a drive cap to drive the U-channel into the ground to prevent damage to the post end.

www.EngineeringEBooksPdf.com

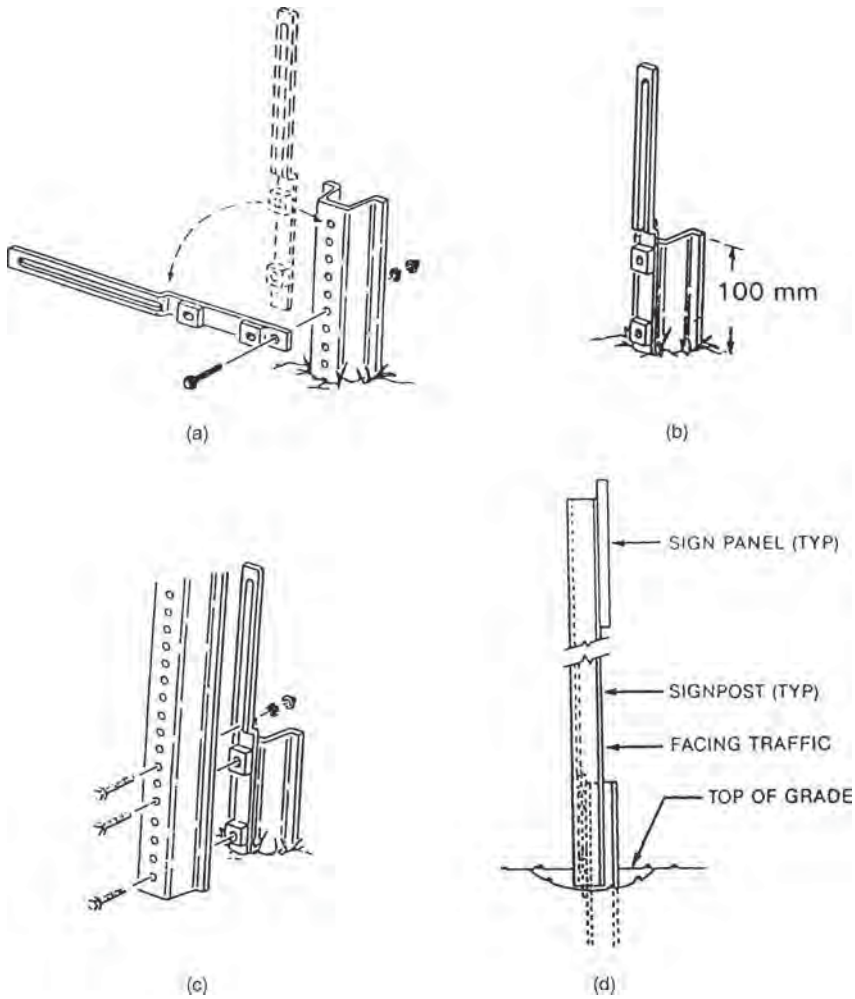

FIGURE 7.33 Installation with Eze-Erect U-channel coupling. (*a*) Drive anchor post to within 12 in (300 mm) of ground level, attach retainer spacer strap through bottom hole of strap and sixth hole of anchor post, and rotate strap to the side. (*b*) Drive anchor post to within 4 in (100 mm) of ground level and rotate strap to vertical position. (*c*) Attach signpost with two bolts, nuts, and lock washers in bottom and fifth hole; insert one bolt through signpost and bottom of long slot in strap; and tighten all nuts snugly before completely tightening assembly. (*d*) Finished assembly.

- If an anchor base is used, do not leave the anchor stub protruding more than 4 in (100 mm) above ground level.
- The generic splice should provide an overlap of 6 in (150 mm) with the anchor base. This results in 2 in (50 mm) of the signpost extending below ground level. The signpost is fastened to the anchor stub with ⅜-in (8-mm) grade 9 bolts spaced 4 in (100 mm) apart. The signpost and anchor piece should be separated with a 5/16-in (16-mm) spacer to prevent possible binding of the posts upon impact.

www.EngineeringEBooksPdf.com

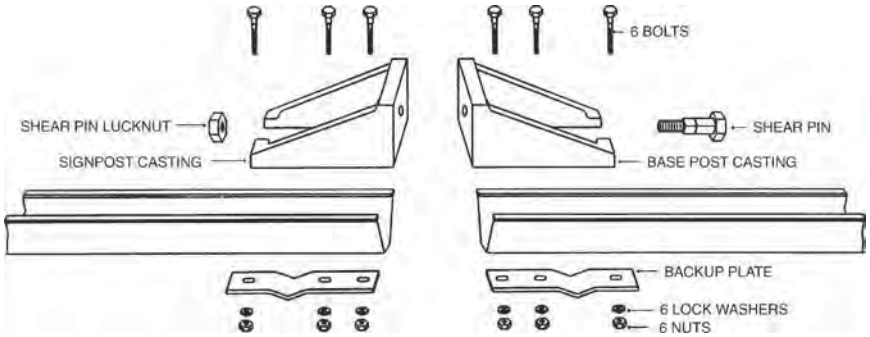

FIGURE 7.34 Minute-Man coupling for use with RIB-BAK U-channel signposts. Erection steps: (1) Bolt couplers to both Minute-Man groundpost and accompanying sign support using backup plates for reinforcement. (2) Drive groundpost into the ground until only 3 in (75 mm) remain above ground [1 in (25 mm) of bottom coupler is buried]. (3) Raise sign and connect Minute-Man's top and bottom sections by inserting shear pin. To finish, simply tighten shear pin bolt.

- Anchor pieces one size larger than the sign post will help prevent damage to the anchor piece upon impact.
- The Florida splice requires an overlap of 8 in (200 mm). This results in embedding of 4 in (100 mm) of the signpost below ground. The splice is secured with ⅜-in (10-mm) A307 bolts, 2 in (50 mm) long, spaced at 6 in (150 mm) center to center. A ⅝-in (16-mm) spacer is placed between the anchor piece and the signpost. The use of ⅜-in-diameter (10-mm) bolts requires that the post holes be reamed in order to insert the bolts. Reaming destroys the corrosion protection of the hole, necessitating the application of zinc-rich paint paste to prevent corrosion.
- If commercial splices are used, the manufacturer's installation instructions must be closely followed for proper impact performance.
- The frangible bolt provided with the Minute-Man must be used for proper impact performance. Do not replace this bolt with a regular steel bolt.
- It is not recommended to interchange signposts and anchor stubs of different manufacturers when there is variation in cross-section between the two sections. No crash tests have been done on mixed anchor stubs and signposts. The difference in cross-section may be sufficient to cause problems in nesting under some splice orientations.
- The signpost should be placed behind (on the nonimpact side of) the anchor stub for U-channel anchor base assemblies.
- Splices that are performed above the anchor piece to extend short pieces of U-channel or to piece together salvaged U-channel are not recommended. One-piece U-channel posts perform better under impact than posts that have been spliced above the anchor stub. A splice in the impact zone can strengthen the post and degrade its impact performance. Splices above the impact zone can open, allowing the sign panel to take an unpredictable and potentially hazardous trajectory. The splice can also open with the lower end of the upper post section penetrating the impacting vehicle. If splices above the anchor piece are used with U-channel, it is important that the following conditions are met [37]:

  The splice does not extend below ground level.
  The overlap is approximately 18 in (460 mm) fastened by four 5/16-in (8-mm) bolts, with two bolts, through the holes nearest the ends, at each end of the splice. Spacers ⅝ in (16 mm) thick should be placed over the bolts between the spliced pieces of U-channel.

www.EngineeringEBooksPdf.com

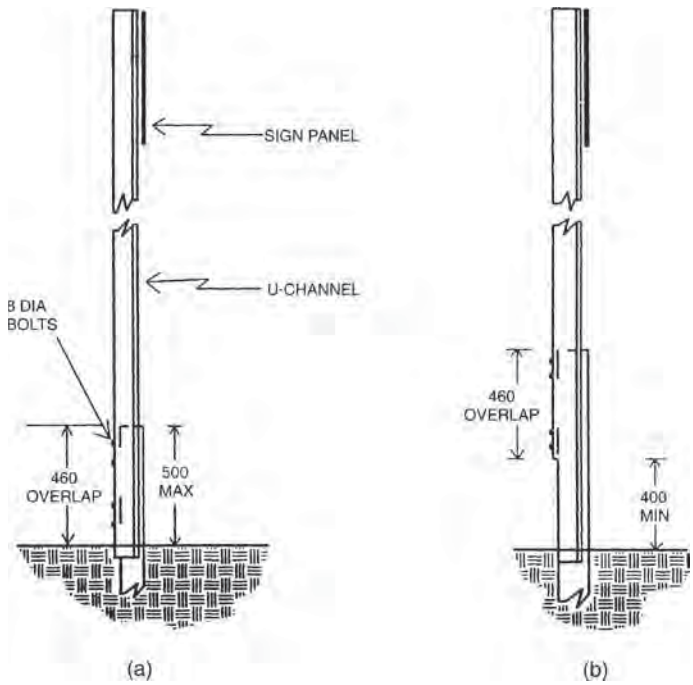

FIGURE 7.35 Allowable but not desirable splicing of U-channel sign supports. (*a*) Limits on lower splice. (*b*) Limits on upper splice. Dimensions shown as mm. Conversions: 400 mm = 16 in, 460 mm = 18 in, 500 mm = 20 in.

A splice that is mostly below a vehicle bumper height should have a maximum top elevation of 20 in (500 mm), and a splice that is mostly above the bumper should have a bottom elevation of 16 in (400 mm) or above. A diagram of these recommendations is presented in Fig. 7.35.

Square Steel Tubes. Square steel tubes are available from a number of manufacturers in perforated, and punched but not perforated, styles [38, 39, 40]. Two of the major manufacturers of square-tube posts are Unistrut, with the brand name Telespar, and Allied Tube and Conduit, with the perforated Square Fit and the nonperforated Quick-Punch tubes. Square-tube sign supports can be installed as one-piece direct burial assemblies and with anchor pieces. The anchor piece assemblies have the advantages of more predictable performance upon impact, a larger range of permissible sizes, and reduced maintenance required for repair after impact. Figure 7.13 shows different installation methods.

Square steel-tube sign supports up to 2.25 in × 2.25 in (57 mm × 57 mm) in size can be installed by direct burial. Sizes larger than 2.25 in × 2.25 in (57 mm × 57 mm) require an anchor base assembly to provide acceptable impact performance characteristics. The most common method of direct burial is by driving directly into the ground, using a driving cap to protect the end, by mechanical drivers or a sledgehammer. Drive or place the square tube at least 36 in (900 mm) deep but no more than 42 in (1100 mm) into the ground to make it easier to pull out damaged posts.

www.EngineeringEBooksPdf.com

Repair of damaged square tube is easier to perform when an anchor base assembly is used. The anchor base assembly for square tube usually consists of a 30-in-long (760-mm) anchor piece, one size larger than the signpost, and an 18-in-long (450-mm) stiffening sleeve, one size larger than the anchor piece. The sleeve provides a double-walled anchor base that helps prevent damage to the anchor assembly and makes the breakaway characteristics of the signpost more predictable. Acceptable impact performance can also be obtained by the use of only the anchor piece, but damage to the anchor piece and increased maintenance are more likely to occur than when using a stiffening sleeve. Sizes larger than 2.5 in × 2.5 in (64 mm × 64 mm) should not be used for breakaway performance with the anchor breakaway design. The anchor piece must not extend more than 4 in (100 mm) above ground level. The installation procedures for the square-tube anchor base system are provided in Fig. 7.36.

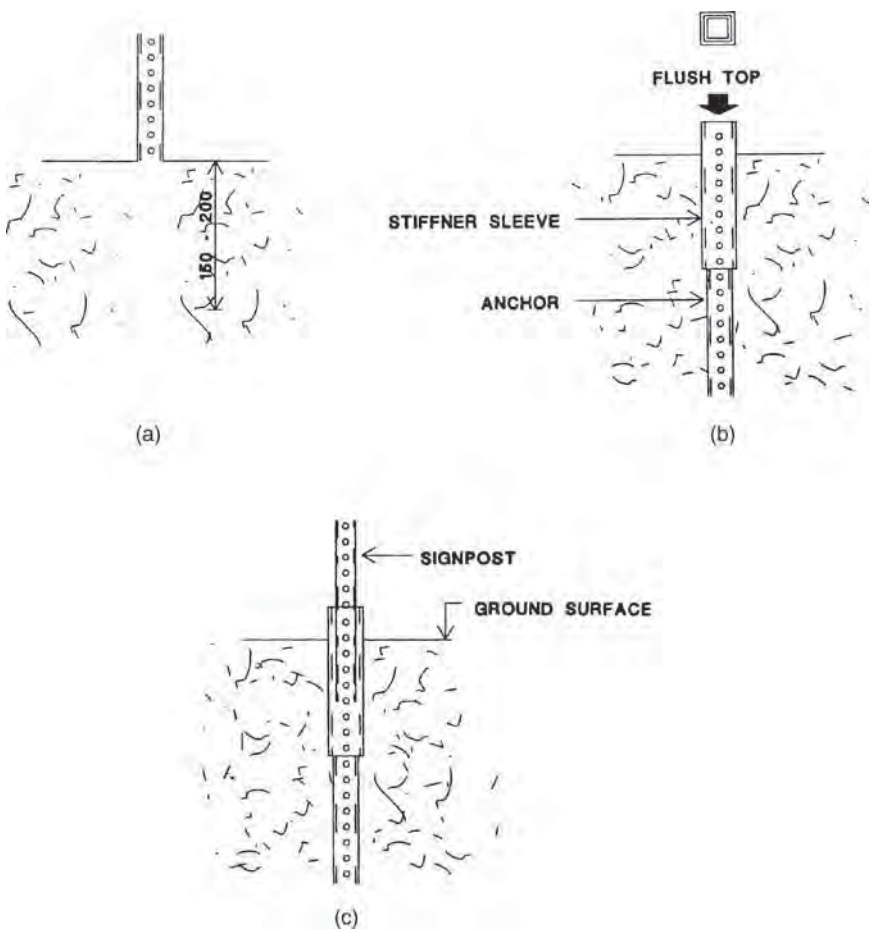

FIGURE 7.36 Installation procedure for square-tube anchor base assemblies. (*a*) Drive the anchor post 6 to 8 in (150 to 200 mm) into the ground, remove post, and knock out soil from post end. (*b*) Reinsert post into hole and drive with stiffer sleeve to 1 to 2 in (25 to 50 mm) above ground level. (*c*) Attach sign to signpost, insert 6 to 8 in (150 to 200 mm) into anchor, and fasten to base.

www.EngineeringEBooksPdf.com

In addition to the telescoping anchor bases, made from larger sizes of square tubing, there are heavy-duty anchor bases commercially available. These bases can be used in hard or rocky soil conditions that can present problems for driving the regular-sized tubing as anchor pieces.

The following guidelines should be followed for the installation and use of square steel-tube signposts:

- Do not directly bury square steel tubing that is larger than 2.25 in × 2.25 in (57 mm × 57 mm). If a sign requires a larger post, use an anchor base system.
- Repair of the square steel-tube sign assembly is much easier if an anchor base system is used. The stiffening sleeve helps reduce damage to the anchor and provides a strengthened base for reliable impact performance.
- The anchor assembly should be driven or placed into the ground with only 1 to 2 in (25 to 50 mm) protruding above ground level. This will expose one or two holes for fastening the sign assembly, reduce vehicle sagging, and ease repair.
- If driving the post or anchor base into the ground, use a drive cap to protect the exposed end. If a drive cap is not used, the exposed end will become distorted, inhibiting insertion of the telescoping tube.
- Do not install a two-piece anchor assembly if the top of the anchor piece and sleeve is not flush or if the holes are misaligned. The bolts will be difficult to insert and the higher piece may bend upon impact, damaging the anchor assembly.
- Do not overtighten the bolts that fasten the signpost to the anchor assembly. Tightening the bolts too much will distort the tubing and hinder the removal or insertion of the signpost into the anchor assembly.
- Sections of square steel tube can be spliced together to allow the reuse of damaged posts. The splice is made by using a 12-in-long (300-mm) section of tubing one size smaller than the tubing to be repaired. The 12-in (300-mm) section is inserted halfway into one of the tubes and secured with two drive rivets or one bolt. The second tube is then slipped over the free end of the 12-in (300-mm) section and fastened in place.
- Square tube can be used to install signs in areas of concrete or asphalt by drilling or chipping through the surface and driving an anchor assembly in place. An anchor base is recommended in concrete or asphalt areas to make repair easier in case of impact.

Wooden Posts. The most common wooden supports for single signpost installation are the 4-in × 4-in (90-mm × 90-mm) shaped and the 4-in-diameter (100-mm) round posts. These posts should be directly buried to a depth of at least 36 in (910 mm) (Fig. 7.12*a*). Deeper burial is often performed to reduce vandalism. Posts larger than the 4-in × 4-in (90-mm × 90-mm) and the 4-in-diameter (100-mm) posts require drilled holes to reduce the cross-section and embedment in concrete so as to safely break away during impact. The requirements presented in Tables 7.8 and 7.9 should be followed for the installation of rectangular shaped and timber posts.

The use of ½-in-thick (13-mm) Styrofoam for the concrete foundation (Fig. 7.12*b*) eases the removal of broken stub pieces [41]. An example of hole placement to achieve a weakened cross-section is also presented in Fig. 7.12*b* [42]. The bottom hole should never be centered more than 4 in (100 mm) above the ground, because the stub piece must remain at 4 in (100 mm) or less after impact. Rectangular-shaped posts are placed with the long post dimension parallel to the direction of travel. The holes of the proper size for the post are drilled perpendicular to the expected direction of impact.

Steel-Pipe Posts. Steel-pipe (schedule 40) posts smaller than 2 in (50 mm) internal diameter can be directly buried and still provide acceptable impact performance. As

www.EngineeringEBooksPdf.com

TABLE 7.8 Installation of Shaped Wooden Posts for Single Sign Installation

Post size, in (mm)	Embedment type and depth	Comments and required post modifications
4 × 4 (90 × 90)	Direct burial to a minimum of 36 in (920 mm).	No holes required.
4 × 6 (90 × 140)	Direct burial to a minimum of 40 in (1 m).	Tests have shown that in loose or sandy soil, this post is not safe for a small car. In weak soils, therefore, holes perpendicular to probable impact path must be used: one 1.5-in (40-mm) hole at 4 in (100 mm) and one 1.5-in (40-mm) hole at 5.5 in (140 mm) above ground level.
4 × 6 (90 × 140)	Set in a concrete foundation of 18 in (460 mm) diameter and 30 in (760 mm) deep to a depth of 24 in (610 mm) with a steel sleeve.	No holes required when placed in a concrete foundation.
6 × 6 (140 × 140)	Set in unreinforced concrete foundation. Wrap ½-in-thick (13-mm) sheet Styrofoam around post before setting it in concrete to ease removal of broken stub.	Holes must be drilled perpendicular to probable impact path: one 2-in (50-mm) hole at 4 in (100 mm) and one 2-in (50-mm) hole at 18 in (460 mm) above ground level.
6 × 8 (140 × 190)	Placed in 24-in-diameter (610-mm), 30-in-deep (760-mm) concrete foundation with steel sleeves to a depth of 24 in (610 mm).	Holes must be drilled perpendicular to probable impact path: one 3-in (75-mm) hole at 4 in (100 mm) and one 3-in (75-mm) hole at 18 in (460 mm) above ground level.

indicated in Art. 7.3.6, a plate 4 in × 12 in × 0.25 in (100 mm × 310 mm × 6 mm), or two sign clamps, should be bolted or welded to the pipe, beneath ground level, to prevent rotation due to wind. Schedule 40 steel-pipe supports should be direct buried, with the attached earth plate, to a depth of at least 42 in (1070 mm) to provide acceptable performance upon impact.

A breakaway collar assembly is required for schedule 40 standard pipe that is equal to or greater than 2 in (50 mm) ID. The breakaway collar can be made by the use of a regular pipe coupling or reducing coupling [43]. The reducing coupling is recommended since it reduces the probability of damage to the anchor piece, thereby easing repair. The anchor piece is usually one size larger than the signpost. The anchor assembly consists of a 24-in-long (610-mm) anchor piece placed in a concrete footing that is 30 in (760 mm) deep and 12 in (300 mm) in diameter.

In addition to standard steel pipe, there are round steel-tube sign supports available from a number of manufacturers, with a wall thickness of 12 gauge or less and designed for use in an anchor system. Commercial anchor systems, such as the Poz-Loc, can be used for the round steel tubes and for standard pipe 2 in (50 mm) or less in size [44]. The use of commercial anchor systems requires closely following the manufacturer's instructions for proper performance.

A summary of steel-pipe sign-support installation recommendations is provided in Table 7.10. Also consider the following guidelines:

- Standard steel pipe (schedule 40) that is less than 2 in (50 mm) ID can be directly buried for use as sign supports. Direct burial supports should have an anchor plate, or sign brace, bolted or welded to the buried portion to prevent rotation.

www.EngineeringEBooksPdf.com

TABLE 7.9 Installation of Timber Wooden Posts

Post diameter, in (mm)	Embedment type and depth	Comments and required post modifications
4 (100)	Direct burial to at least 36 in (920 mm)	No holes required.
5 (127)	Placed in soilcrete foundation of 18 in (460 mm) diameter and 4.5 ft (1100 mm) deep	Holes must be drilled perpendicular to probable impact path: one 2-in (50-mm) hole at 4 in (100 mm) and one 2-in (50-mm) hole at 18 in (460 mm) above ground level.
6 (150)	Direct burial to 5 ft (1500 mm)	Holes must be drilled perpendicular to probable impact path: one 2-in (50-mm) hole at 4 in (100 mm) and one 2-in (50-mm) hole at 18 in (460 mm) above ground level.
6.5 (165)	Direct burial to 5 ft (1500 mm)	Holes must be drilled perpendicular to probable impact path: one 1.25-in (32-mm) hole at 4 in (100 mm) and one 1.25-in (32-mm) hole at 18 in (460 mm) above ground level.
7 (178)	Direct burial to 5 ft (1500 mm)	Holes must be drilled perpendicular to probable impact path: one 2-in (50-mm) hole at 4 in (100 mm) and one 2-in (50-mm) hole at 460 mm above ground level.
7.5 (190)	Direct burial to 5 ft (1500 mm)	Holes must be drilled perpendicular to probable impact path: one 2.75-in (70-mm) hole at 4 in (100 mm) and one 2.75-in (70-mm) hole at 18 in (460 mm) above ground level.

- Standard steel pipe (schedule 40) that is equal to or greater than 2 in (50 mm) ID must be of breakaway design with anchor base.
- Anchor pieces should be placed in a concrete foundation and be one size larger than the signpost. The breakaway mechanism can be achieved by the use of a reducing coupling. The top of the coupling should not be more than 4 in (100 mm) above ground level.

Also consider the following:

- Do not install aluminum round signposts larger than 3.5 in (90 mm) diameter. Recent tests show that the larger aluminum post sizes fail in weak soil conditions.
- Anchor plates or two sign clamps configured to encircle the post should be used below ground level to prevent rotation due to wind loads.

7.6.3 Slip Base Designs

Slip base designs for single sign supports provide the opportunity to use stronger sign supports than would be possible without the slip base design. The purpose of the slip base is to provide a separation plane between the sign support and the anchor system. The two pieces are fastened together with bolts that must be properly tightened, or

www.EngineeringEBooksPdf.com

TABLE 7.10 Installation of Steel-Pipe Posts

Post type and diameter	Embedment type and depth	Comments
Standard (schedule 40) steel pipe		
Less than 2 in (51 mm) ID	Direct burial to at least 42 in (1070 mm)	An earth plate measuring 4 in × 12 in × 0.25 in (100 mm × 300 mm × 6 mm) must be bolted or welded to the buried end to prevent rotation.
Equal to or less than 2 in (51 mm) ID	Commercial anchor system such as Poz-Loc	Follow manufacturer's instructions.
Equal to or greater than 2 in (51 mm) ID	Breakaway design with concrete anchor base	The concrete base is 30 in (760 mm) deep by 12 in (300 mm) diameter. The anchor piece is embedded 24 in (610 mm) in the concrete base. Use an anchor piece one size larger than the anchor post and a reducing coupling for the breakaway action. Top of coupling should not be more than 4 in (100 mm) above ground level.
Round steel tube 2.5 in (65 mm) O.D. or less with 12 gauge walls	Commercial anchor system such as Poz-Loc	Follow manufacturer's instructions.

torqued. If the bolts are not torqued enough, they will be loosened by vibration from environmental loads, causing the sign assembly to separate. If the bolts are torqued too much, the friction between the base of the signpost and the anchor piece will be too large to permit proper separation upon impact. A 20 to 28 gauge metal "keeper plate" should be inserted between the faces of the top and bottom slip bases to prevent the bolts from migrating out of the assembly (Art. 7.4).

There are three basic types of slip base designs for single sign supports. The horizontal slip base design (Fig. 7.25) will operate correctly when impacted from either the front or the back. Horizontal slip base designs do not provide the lift capability available from inclined or multidirectional designs. Horizontal slip bases when used as single sign supports therefore do not function as well upon impact as the other slip base designs.

The inclined slip base (Fig. 7.18) is the recommended type of slip base for single sign supports when impact can be expected from only one direction. Its performance upon impact is designed to cause the upper sign support and sign panel to raise up, thus allowing the vehicle to pass completely under the support assembly. The anchor piece of the inclined slip base must be installed so that approaching vehicles encounter the lower edge before the high edge.

The multidirectional slip base is fastened together with three bolts and has a lift cone fastened to the bottom plate. The sign support is tubular with a maximum size of 5 in (127 mm) diameter.

All of the slip base designs require a firm foundation for proper operation. Concrete foundations should be used for all slip bases, since direct burial may result

www.EngineeringEBooksPdf.com

TABLE 7.11 Slip Base Anchor Piece Installation Requirements for Round Signposts

a. Requirements in U.S. Customary units		
Internal diameter, ft	Anchor piece stub length, ft	Concrete foundation dimensions, ft
2.0	3	3.5 deep × 1.0 diameter
2.5	3	3.5 deep × 1.0 diameter
3.5	4	4.5 deep × 1.0 diameter
4.0	5	5.5 deep × 1.5 diameter
b. Requirements in SI units		
Internal diameter, mm	Anchor piece stub length, mm	Concrete foundation dimensions, mm
50	920	1066 deep × 300 diameter
64	920	1066 deep × 300 diameter
90	1200	1400 deep × 300 diameter
100	1500	1700 deep × 460 diameter

in base movement and improper release of the slip base. To prevent snagging of the vehicle undercarriage, no part of the anchor piece and its attached slip base may extend more than 4 in (100 mm) above ground level. Horizontal and inclined slip base designs can be constructed with wide-flange, standard-shape, and round sign supports. The concrete footing sizes for wide-flange and standard-shape signposts should be constructed to state specifications. The concrete foundation and anchor stub sizes listed in Table 7.11 are appropriate for round signposts with slip base designs.

Torque Requirements. Specifications for bolt tightness must be followed so that the sign assembly (1) remains intact under normal environmental loadings and (2) separates correctly upon impact. The specifications can be given in a number of ways, such as residual tension, clamping force, or torque. *Torque* refers to the amount of force used in tightening the nut to the bolt. The result of the nut-to-bolt tightening places the bolt in tension and exerts the clamping force. Measuring the torque is the most convenient method of obtaining a specified tightness. Providing a specified torque, however, does not guarantee a certain clamping force. Irregularities in the threads, heavy coating deposits on galvanized parts, or irregularities on the mating surfaces of the nut and plate faces result in friction forces. These friction forces cause an increase in torque to move the nut without a resulting increase in clamping pressure. To help ensure that the torque specification provides the required clamping force, the nut should be tested for thread irregularities by being threaded on the bolt by hand. Also, the proper size flat washers should be used beneath the nut and the head of the bolt. The proper size bolts and recommended torque requirements are provided in Tables 7.12 and 7.13. The tables show requirements for round sign supports by diameter and for other support shapes by unit weight or mass. In U.S. Customary units, S6 × 12.5 designates a standard shape with a depth of 6 in and a unit weight of 12.5 lb/ft; in SI units, S150 × 18.6 member is a standard shape with a depth of 150 mm and a mass of 18.6 kg/m.

Slip Base Orientation. The proper operation of slip bases is also dependent upon proper assembly and correct orientation to the expected direction of impact. The parts,

www.EngineeringEBooksPdf.com

TABLE 7.12 Connection Requirements for Horizontal and Inclined Slip Bases

a. Requirements in U.S. Customary units			
Support shape and size	Number of bolts	Bolt diameter, in	Required torque, ft·lb
Round, by internal diameter, in			
2.0	4	1/2	8 to 12
2.5	4	1/2	8 to 12
3.0	4	1/2	8 to 12
4.0	4	1/2	8 to 12
4.5	4	5/8	19 to 29
Shapes, by lb/ft			
0–3.6	4	5/8	7 to 11
3.7–9.0	4	5/8	17 to 26
9.1–13.6	4	3/4	29 to 43
>13.6	4	1	44 to 55
b. Requirements in SI units			
Support shape and size	Number of bolts	Bolt diameter, mm	Required torque, N·m
Round, by internal diameter, mm			
50	4	13	11 to 16
64	4	13	11 to 16
75	4	13	11 to 16
100	4	13	11 to 16
125	4	16	26 to 39
Shapes, by kg/m			
0–5.4	4	14	10 to 15
5.5–13.4	4	16	23 to 35
13.5–20.2	4	20	40 to 58
>20.2	4	25	60 to 75

TABLE 7.13 Connection Requirements for Multidirectional Slip Bases

a. Requirements in U.S. Customary units			
Round support diameter, mm	Number of bolts	Bolt diameter, ft	Required torque, ft·lb
3.0	3	5/8	19 to 29
3.5	3	5/8	19 to 29
4.0	3	3/4	31 to 46
4.5	3	3/4	31 to 46
b. Requirements in SI units			
Round support diameter, mm	Number of bolts	Bolt diameter, mm	Required torque, N·m
75	3	16	26 to 39
90	3	16	26 to 39
100	3	19	42 to 63
125	3	19	42 to 63

www.EngineeringEBooksPdf.com

and orientation to the primary direction of travel, for the three types of slip bases are presented in Figs. 7.19, 7.20, and 7.26. The horizontal slip base is generally not used for single sign supports. Where impact from more than one direction is expected, the multidirectional slip base provides better performance because of its design for lift upon impact.

Guidelines for Slip Base Installation. The following guidelines should be followed for slip base installation:

- Slip base installations require a firm foundation to operate properly upon impact. Slip base installations should always include a concrete base and never be directly buried or drilled and backfilled.
- Use proper size bolts for the slip base fastening. Bolts that are too small may not be able to be sufficiently tightened and may fail under environmental loads. Bolts that are too large may become stuck in the release slots upon impact and prevent proper separation.
- Use proper size and strength washers. The washers beneath the nut and head surfaces should be sufficiently strong to withstand the torque requirements without deforming into the release slots of the base.
- Three washers should be used on each bolt—one each beneath the nut and bolt head, and one between the upper and lower faces of the slip base. The purpose of the washer between the two slip faces is to prevent binding upon impact. All galvanizing runs or beads should be removed from both the upper and lower faces in the washer areas.
- The nut should be run by hand down the bolt to find thread irregularities that will provide inaccurate torque readings.
- Torque each base bolt to the required specifications.
- Remember that the top portion of the slip base must be attached to the anchor piece. Therefore it is recommended that the anchor piece be installed so that its highest portion extends no more than 3.5 in (90 mm) above the ground. This will help ensure that the addition of the top plate will not result in a height that can snag the undercarriage of an impacting vehicle. The installation shown in Fig. 7.37 is improper and can snag the undercarriage of an impacting vehicle.
- The bolts must be sufficiently long that they can extend approximately ⅜ in (10 mm) beyond the nut after complete assembly.
- Do not install an inclined slip base where impact from more than one direction is expected.

7.7 FASTENING SIGN BLANKS ON SINGLE–SIGN-SUPPORT SYSTEMS

Regardless of the type of support that is being used, there are three general rules that must be followed: (1) the top of the sign should be 9 ft (2750 mm) above ground level to reduce the possibility of intrusion into the passenger compartment upon impact, (2) the retaining bolts must be snug but not so tight as to distort the sign face, and (3) the bolts must be of the proper size and length to prevent the sign blank from separating from the support.

www.EngineeringEBooksPdf.com

FIGURE 7.37 Improper installation of slip base anchor piece.

Fastening to a U-Channel. Signs are normally mounted on the front face of the U-channel. This is the widest face of the U-channel. Signs can also be mounted on the narrow face, as in back-to-back sign installations, for example, but the decreased surface contact with the sign can result in damage to the sign face due to environmental loads. Side mounting on a U-channel requires channel brackets, and brackets for mounting street name signs to the top of the post are available. Typical sign blank installations for a U-channel are presented in Fig. 7.38.

Fastening to Wood Supports. Sign installation on wood supports requires a bolt completely through the post and fastened with a nut. Lag bolts are not recommended for fastening sign blanks to the posts. Fastening with lag bolts is unpredictable upon impact because of the size of the bore hole, possible postsplitting, the presence of knots, and variable characteristics of the wood.

Fastening to Square Tubes. Sign installations on square tubes can be accomplished by 5/16-in (8-mm) bolts and nuts or by the use of rivets. Figure 7.39 presents typical sign panel fastening details for shaped wooden and square-tube sign supports.

Fastening to Round Steel Shapes. Signs should not be fastened directly to standard steel pipe or to light standards. The contact area between the back of the sign and the support due to the round support shape is too small to withstand the wind and other environmental loads. A number of different fastening methods can be used, including B-clamps, U-bolts, and stainless steel band clamps. Figure 7.40 presents the configuration of the B and stainless steel band clamps. The dimensions shown for the B-clamp are typical and vary slightly by manufacturer. The B-clamp is also available in other sizes than shown in Fig. 7.40.

www.EngineeringEBooksPdf.com

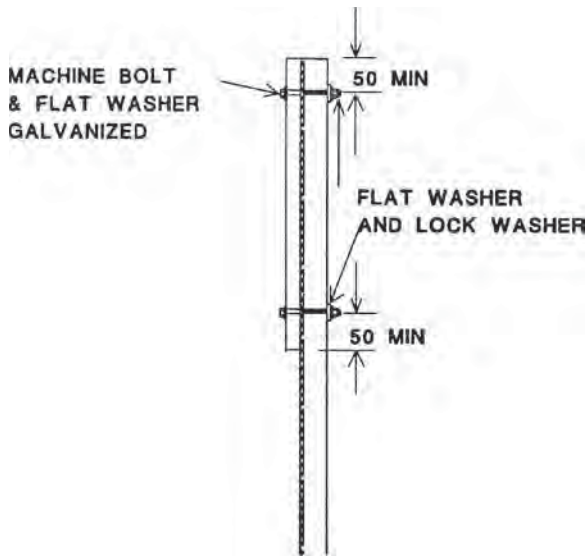

FIGURE 7.38 Typical sign blank fastening to U-channel. Dimensions shown as mm: 50 mm = 1 in.

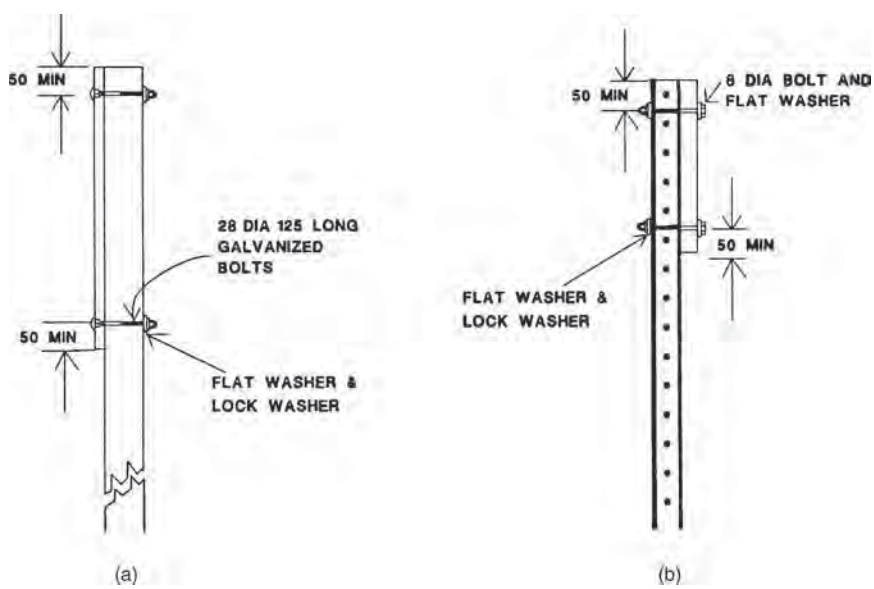

FIGURE 7.39 Typical sign blank fastening to shaped wood and square-tube supports. (*a*) Shaped wooden posts. (*b*) Square tube. Dimensions shown as mm. Conversions: 8 mm = 5/16 in, 50 mm = 2 in, 125 mm = 5 in.

www.EngineeringEBooksPdf.com

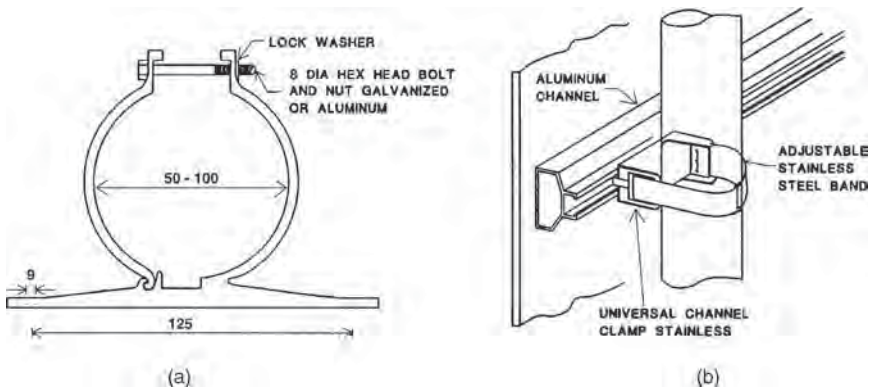

FIGURE 7.40 Typical design of B and stainless band clamps for round sign supports. (*a*) B-type clamp. (*b*) Stainless steel band clamps for round sign supports. Dimensions shown as mm. Conversions: 8 mm = 5/16 in, 9 mm = 3/8 in, 50 mm = 2 in, 100 mm = 4 in, 125 mm = 5 in.

U-bolts can also be used to fasten signs to round supports. The U-bolt is attached to the sign by the use of Z-bar aluminum channel or pieces of U-channel. The U-bolt is purchased with an anchor chair to grip the post. Fastening details for U-bolts with aluminum Z-bar are presented in Fig. 7.41 and with aluminum channel or U-channel in Fig. 7.42.

Fastening to Structural Steel Shapes. Fastening signs to S- or W-shaped beam posts, often used with slip base designs, should be accomplished by using a stiffener. Clamps are used to fasten the stiffeners to the support, eliminating the need to drill into the support itself. Fastening details using aluminum Z-bar as the stiffener are presented in

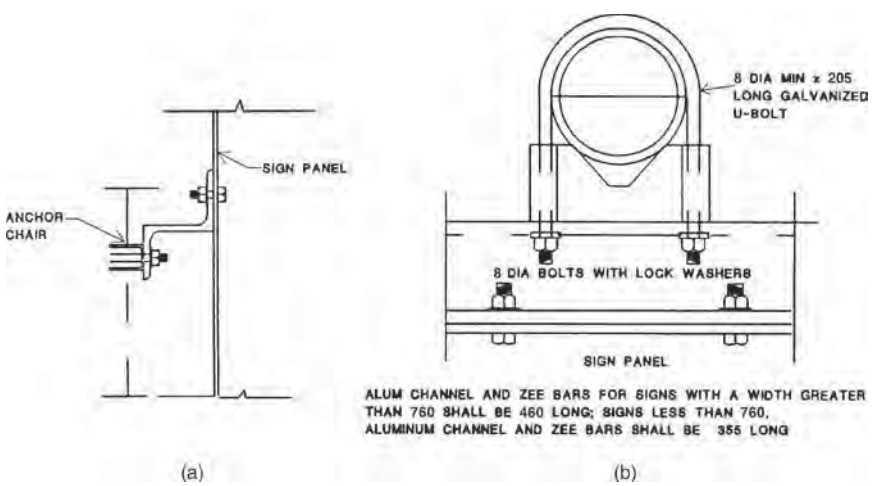

FIGURE 7.41 Fastening details for aluminum Z-bar and channel. (*a*) Z-bar. (*b*) Aluminum channel. Dimensions shown as mm. Conversions: 8 mm = 5/16 in, 205 mm = 8 in, 355 mm = 14 in, 460 mm = 18 in, 760 mm = 30 in.

www.EngineeringEBooksPdf.com

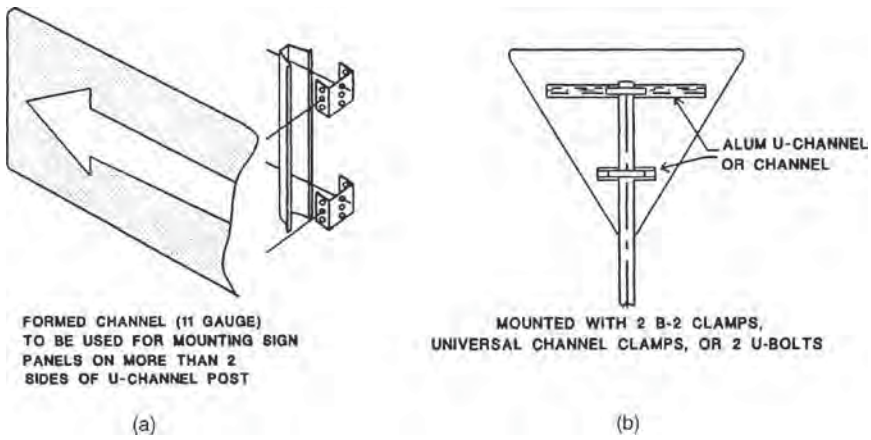

FIGURE 7.42 Typical variations for installing signs on round posts. (*a*) With formed channel. (*b*) With clamps or bolts.

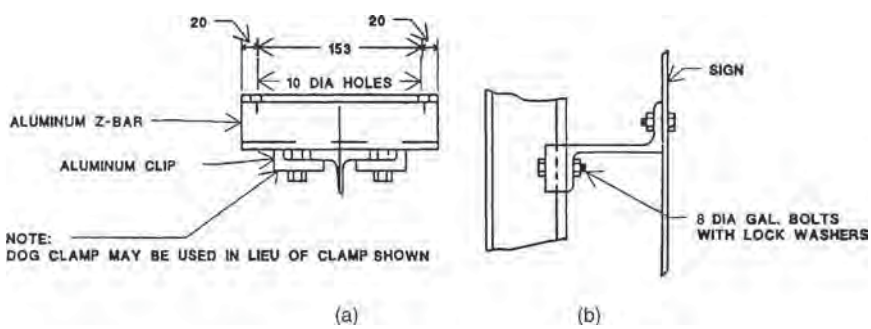

FIGURE 7.43 Aluminum Z-bar for attaching sign panels to beam post. (*a*) Top view. (*b*) Side view. Dimensions shown as mm. Conversions: 8 mm = 5/16 in, 10 mm = 3/8 in, 20 mm = 3/4 in, 153 mm = 6 in.

Fig. 7.43. Figures 7.44 and 7.45 present fastening details for commercially available aluminum stiffeners specifically designed for mounting signs to beam supports.

7.7.1 Guidelines for Fastening Sign Panels to Single-Support Systems

The following guidelines should be followed for fastening sign panels to supports:

- Bolts smaller than 5/16 in (8 mm) should not be used to fasten sign panels to the support. The bolts must be long enough to provide for bolt extension beyond the fastening nut.
- Carriage bolts, or hex bolts with washers between the hex head and sign face, should be used to reduce the possibility that the sign might separate from the support upon impact. Flat washers and lock washers should be used at the nut end of the bolt.
- The bolts must be tightened sufficiently to prevent loosening, but not so tight as to distort the sign face.

www.EngineeringEBooksPdf.com

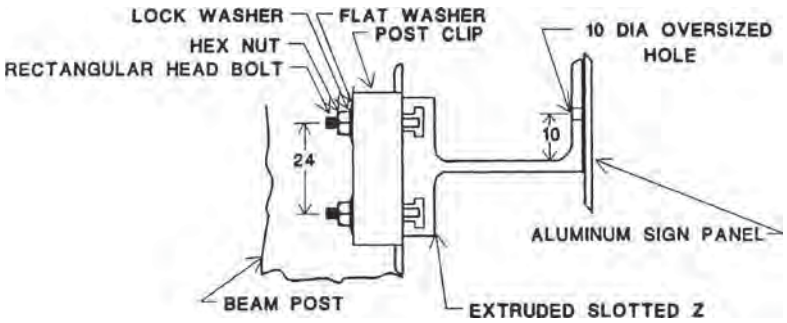

FIGURE 7.44 Aluminum slotted Z-bar for attaching sign panels to beam post. Dimensions shown as mm. Conversions: 10 mm = ⅜ in, 24 mm = 1 in.

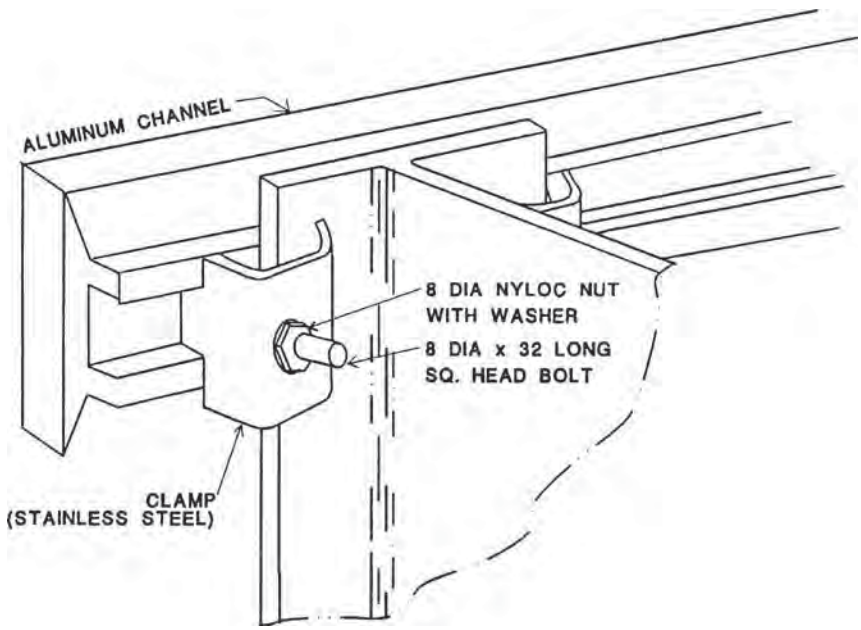

FIGURE 7.45 Extruded aluminum channel for attaching sign panels to beam post. Dimensions shown as mm. Conversions: 8 mm = 5/16 in, 32 mm = 1¼ in.

- Do not allow the bolt to twist when tightening. This will often cause ripping of the reflective sign face material.
- Signs should be mounted on the supports so that the top of the sign is at least 9 ft (2750 mm) above ground level.
- For slip base designs, the sign panel stiffeners, mounting hardware, and the upper sign support itself must not weigh more than 600 lb (270 kg).
- Follow the manufacturer's instructions when using commercially available fastening hardware.

www.EngineeringEBooksPdf.com

7.8 MULTIPLE–SIGN-MOUNT INSTALLATION

Multimount sign supports have two or more support posts of breakaway design. The breakaway mechanism is either a fracture or a slip base type. Fracture mechanisms consist of frangible couplers or frangible one-piece posts.

7.8.1 One-Piece Multiple-Mount Sign Supports

Direct burial assemblies that are approved for use include dual 3-lb/ft (4.5-kg/m) U-channel and dual 4-in × 4-in (90-mm × 90-mm) wooden posts that have been modified with two 1.5-in (38-mm) holes placed at 4 and 18 in (100 and 450 mm) above the ground line. Other than these exceptions, multiple-mount sign supports require the use of anchor pieces, sleeves, slip bases, or frangible couplings for acceptable impact performance. Only those devices approved for use by the FHWA should be used for multiple-mount supports. Since more than one support can be simultaneously struck by an errant vehicle, it is important that proper installation procedures be followed. Figure 7.46 illustrates the holes drilled in a direct burial wooden post to provide the weakened cross-section required for multiple wooden post installation.

7.8.2 Frangible Coupler Designs

Transpo Industries manufactures a series of breakaway systems for ground-mounted sign supports, marketed under the trade name Break-Safe. The Break-Safe system uses frangible couplers and is available for U-channel, both concrete footing and direct burial; 3-in to 4.5-in (75-mm to 115-mm) round pipe; 3-in to 5-in (75-mm to 127-mm) square

FIGURE 7.46 Weakened wooden post for multiple supports.

www.EngineeringEBooksPdf.com

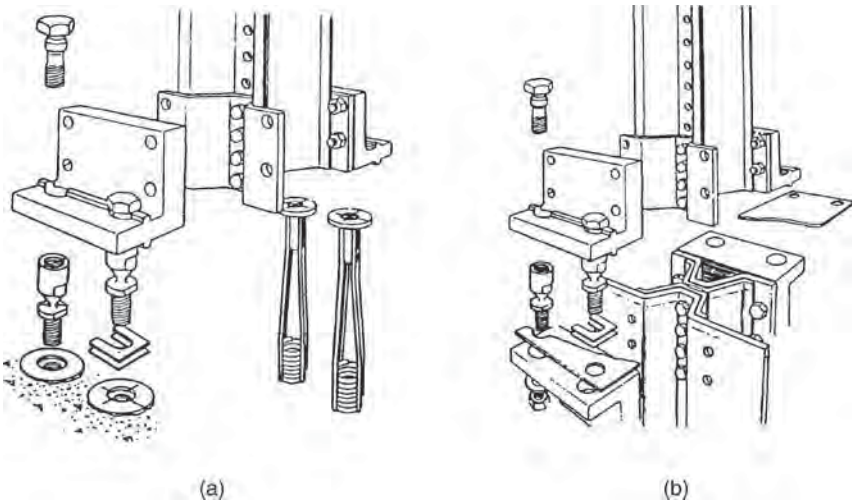

FIGURE 7.47 Transpo Break-Safe system for back-to-back U-channel supports. (*a*) Concrete footing. (*b*) Direct burial.

tube; and wide-flange and standard beam shapes. Schematics of Transpo Industries concrete base and the direct burial system for back-to-back U-channel are presented in Fig. 7.47. Figure 7.48 shows the Break-Safe system for square-tube and round-pipe supports [33].

The Break-Safe has a number of advantages over slip base designs. One advantage is that the critical torque requirements of the slip base bolts are eliminated by the use

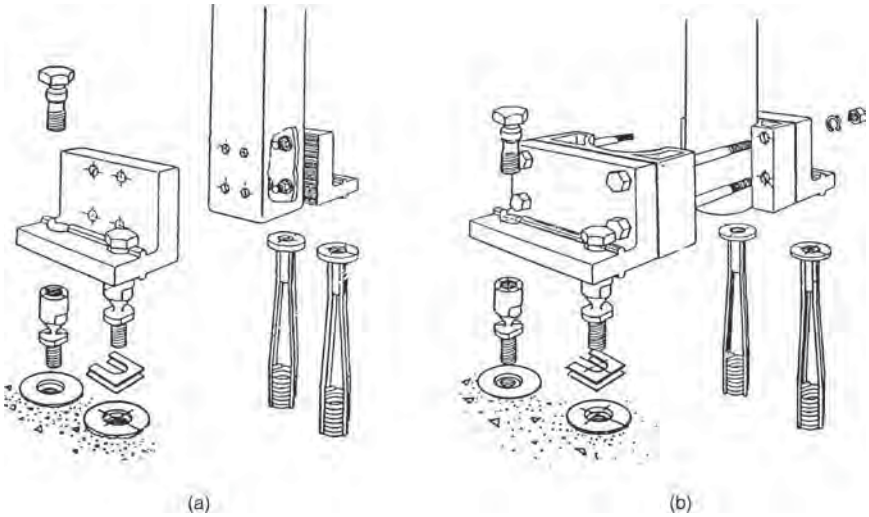

FIGURE 7.48 Transpo Break-Safe system for square-tube and round-pipe supports. (*a*) Square-tube support. (*b*) Round-pipe support.

www.EngineeringEBooksPdf.com

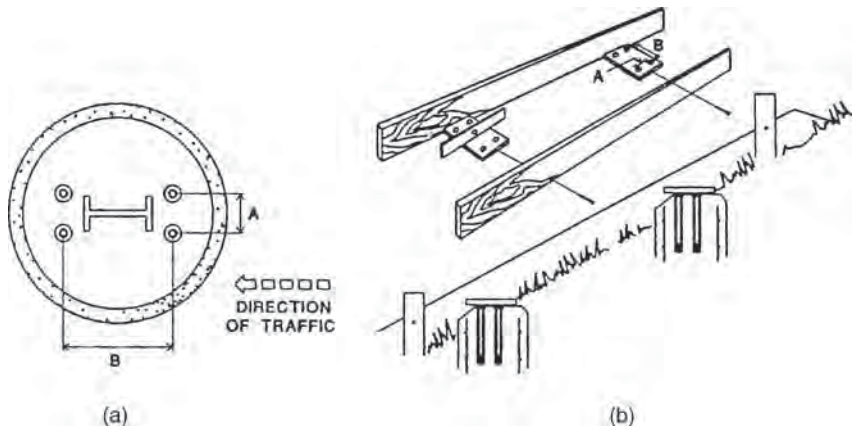

FIGURE 7.49 Concrete footing and installation jig for Break-Safe installations. (*a*) Plan view of footing. (*b*) Installation jig.

of frangible couplings. There are retrofit kits available, for wide-flange and standard beam supports, that use the existing slip base anchor to convert to a frangible coupler design. Another advantage of the Break-Safe system is that the concrete base installations do not require a protruding stub. This decreases the probability of snagging the undercarriage of an impacting vehicle, and damage to the anchor system itself. The protruding stub is eliminated by bolting the frangible coupling into anchors placed in the concrete footing. Proper assembly requires that the anchors be accurately placed for each type of support system. Accurate anchor placement requires the use of an installation jig similar to Fig. 7.49 [33]. The anchor spacings, dimensions *A* and *B* in Fig. 7.49*b,* vary with the type and size of sign support being installed. Frangible and load concentration couplers (Fig. 7.22) usually perform satisfactorily when struck from any direction (they are multidirectional).

7.8.3 Slip Base Designs

Slip base designs for multiple sign supports are usually of horizontal design as shown in Figs. 7.23 and 7.26. Horizontal slip bases, when used in multiple–sign-support systems, operate satisfactorily when impacted from only one direction. Horizontal slip bases should not, therefore, be used for multiple sign supports where there is a high probability of impacts from more than one direction. In Fig. 7.26, the keeper plate prevents the bolts from "walking" out of the assembly as a result of wind vibration (Art. 7.4). The washers should separate the upper and lower slip plates by at least ⅛ in (3 mm), but not more than ¼ in (6 mm), to prevent mating of the surfaces and possible binding due to friction. Proper size washers must also be used under the nut and bolt head to prevent the washers from deforming into the slots of the slip plates and binding the mechanism.

A typical concrete foundation detail is shown in Fig. 7.50, and specifications for the anchor piece of slip base designs are presented in Table 7.14. Notice that the foundation design includes eight reinforcing bars spaced around the anchor piece. This is a typical installation which is effective in maintaining the integrity of the foundation

www.EngineeringEBooksPdf.com

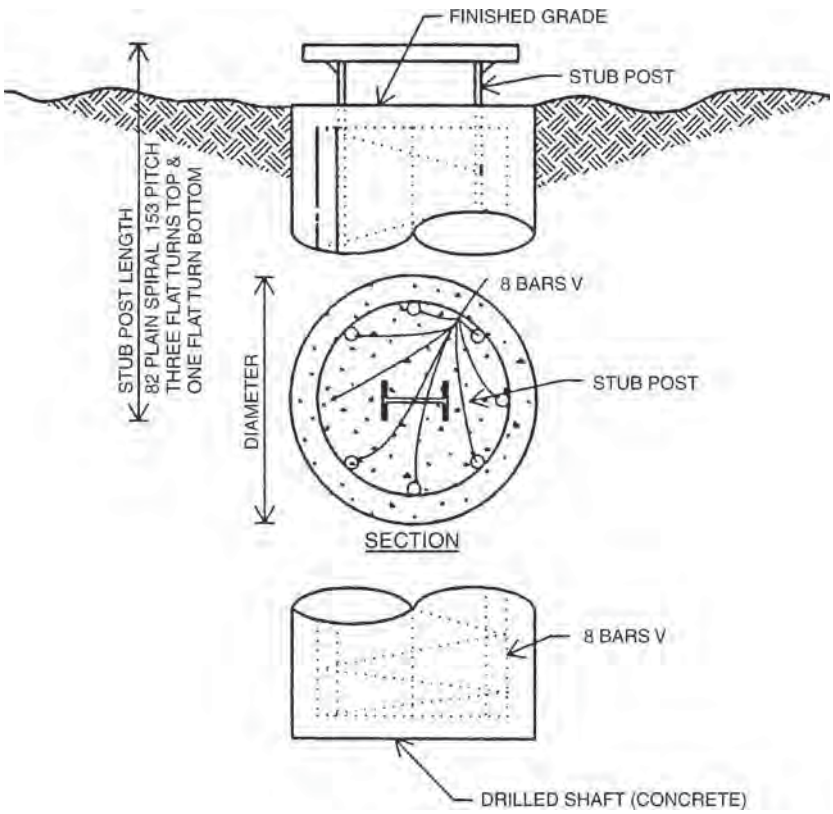

FIGURE 7.50 Horizontal base and concrete foundation detail.

under vibrations resulting from environmental loads. State specifications should be consulted to determine if local requirements deviate from details shown in Fig. 7.50.

Proper functioning of the slip base requires correct selection of bolt size and torque. Table 7.15 gives typical design specifications for large roadside sign slip bases and concrete foundations.

An omnidirectional triangular base, mounted in standard soil with three $2\frac{1}{2}$-in × $2\frac{1}{2}$-in (64-mm × 64-mm) perforated steel tube supports located within a 7-ft (2100-mm) radius, has been approved for use [49].

7.8.4 Hinge Requirements

Multiple sign supports are designed to operate correctly when either one or all of the supports within a 7-ft (2100-mm) radius are impacted. When only one support is impacted, the remaining signpost should support the sign and prevent it from penetrating the windshield. The desired impact performance of slip base and frangible coupler designs for large sign supports is depicted in Fig. 7.29. The base releases upon impact and the impacted support rotates up, allowing the vehicle to pass underneath the sign. This requires that the post be cut, at least 7 ft (2100 mm) above the ground, to provide a hinge for rotation.

www.EngineeringEBooksPdf.com

TABLE 7.14 Details of Concrete Foundation Design for Large Slip Bases

a. Details in U.S. Customary units				
Post size, in × lb/ft	Stub length	Stub projection, in	Drilled shaft diameter	A615M bar size, no.
S3 × 5.7	1′-6″	3½	1′-6″	5
S4 × 7.7	1′-6″	3½	1′-6″	5
W6 × 8.5	2′-0″	3	2′-0″	5
W6 × 12	2′-0″	3	2′-0″	5
W6 × 15.5	2′-6″	3	2′-0″	6
W8 × 17	2′-6″	3	2′-0″	7
W8 × 20	3′-0″	2½	2′-0″	8
W10 × 21	3′-0″	2½	2′-0″	9
W10 × 25	3′-0″	2½	2′-0″	10
W12 × 27	3′-0″	2½	2′-0″	11
b. Details in SI units				
Post size, mm × kg/m	Stub length, mm	Stub projection, mm	Drilled shaft diameter, mm	A615M bar size, no.
S76 × 8	460	90	460	15
S100 × 11	460	90	460	15
W150 × 13	600	75	610	15
W150 × 18	600	75	610	15
W150 × 23	760	75	610	20
W200 × 25	760	75	610	25
W200 × 30	910	65	610	25
W254 × 31	910	65	610	30
W254 × 37	910	65	610	35
W305 × 40	910	65	610	35

As shown in Fig. 7.30 and discussed in Art. 7.5.3, hinges for large sign supports consist of three basic designs: (1) partially cut post with front friction plate, (2) completely cut post with front friction and rear hinge plate, and (3) completely cut post with weakened front plate and rear hinge plate. Proper performance of the hinge requires the correct selection of plate size, bolt size, and torque. Figure 7.51 and Table 7.16 present the design values for friction plates. Figure 7.52 and Table 7.17 present the design values for hinge plates. The bolt torque values for both friction and hinge plates are the same as presented as Table 7.15 for slip bases. Proper sized flat washers should be used under each nut and the head of each bolt.

The hinge systems shown in Fig. 7.30 are all unidirectional designs and should not be used in areas requiring bidirectional breakaway performance. Only the Transpo hinge system shown in Fig. 7.31 offers bidirectional breakaway capability.

7.9 FASTENING SIGN BLANKS ON MULTIPLE–SIGN-SUPPORT SYSTEMS

The sign blank and its mounting hardware become a structural component of the sign assembly upon impact. Slip base and frangible coupler designs of multiple–sign-support systems require the sign panel hardware, and the upright signposts, to provide the

www.EngineeringEBooksPdf.com

TABLE 7.15 Bolt-Tightening Specifications for Slip Base Design

a. Specifications in U.S. Customary units			
Post size, in × lb/ft	Bolt size, in	Clamping force, lb	Torque, ft·lb
S3 × 5.7	½	920–1380	7–11
S4 × 7.7	½	920–1380	7–11
W6 × 8.5	⅝	1740–2660	17–19
W6 × 12	⅝	1740–2660	17–19
W6 × 15.5	⅝	1740–2660	17–19
W8 × 17	⅝	1740–2660	17–19
W8 × 20	⅝	2400–3600	17–19
W10 × 21	⅝	2400–3600	31–46
W10 × 25	¾ or ⅞	2400–3600	31–46
W12 × 27	¾ or ⅞	2400–3600	31–46
>30 lb/ft	1	2400–3600	44–55
b. Specifications in SI units			
Post size, mm × kg/m	Bolt size, mm	Clamping force, N	Torque, N·m
S76 × 8	14	4092–6139	10–15
S100 × 11	14	4092–6139	10–15
W150 × 13	16	7740–11,832	23–25
W150 × 18	16	7740–11,832	23–25
W150 × 23	16	7740–11,832	23–25
W200 × 25	16	7740–11,832	23–25
W200 × 30	16	10,676–16,014	23–25
W254 × 31	20 or 22	10,676–16,014	42–62
W254 × 37	20 or 22	10,676–16,014	42–62
W305 × 40	20 or 22	10,676–16,014	42–62
> 45 kg/m	27	10,676–16,014	60–75

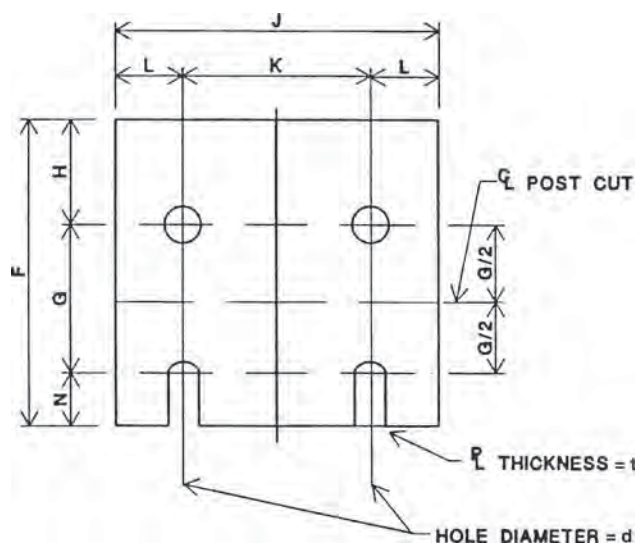

FIGURE 7.51 Design of friction plate. (See Table 7.16 for dimensions.)

www.EngineeringEBooksPdf.com

TABLE 7.16 Specification of Friction Plate Design

a. Specification in U.S. Customary units; dimensions in in; see Fig. 7.51

Post size, in × lb/ft	Bolt diameter	Bolt length	*F*	*G*	*H*	*J*	*K*	*L*	*N*	*d*	*t*
S3 × 5.7	½	1½	3⅛	1½	1⅛	2⅝	1⅜	⅝	½	9/16	¼
S4 × 7.7	½	1½	3⅛	1½	1⅛	2⅝	1⅜	⅝	½	9/16	¼
W6 × 8.5	½	1½	3⅝	2	1⅛	4	2¼	⅞	½	9/16	¼
W6 × 12	½	1½	3⅝	2	1⅛	4	2¼	⅞	½	9/16	¼
W6 × 15.5	⅝	1½	4⅜	2½	1¼	6	3½	1¼	⅝	11/16	⅜
W8 × 17	⅝	1½	4⅜	2½	1¼	5¼	2¾	1¼	⅝	11/16	⅜
W8 × 20	¾	1¾	4¾	2½	1½	5¼	2¾	1¼	¾	13/16	½
W10 × 21	¾	1	5¼	3	1½	5¾	2¾	1½	¾	13/16	½
W10 × 25	¾	1⅞	5¼	3	1½	5¾	2¾	1½	¾	13/16	½
W12 × 27	¾	1⅞	5¼	3	1½	6½	3½	1½	¾	13/16	½

b. Specification in SI units; dimensions in mm; see Fig. 7.51

Post size, mm × kg/m	Bolt diameter	Bolt length	*F*	*G*	*H*	*J*	*K*	*L*	*N*	*d*	*t*
S76 × 8	13	38	80	38	29	67	35	16	13	15	6
S100 × 11	13	38	80	38	29	67	35	16	13	15	6
W150 × 13	13	38	92	51	29	102	57	23	13	15	6
W150 × 18	13	38	92	51	29	120	57	23	13	15	6
W150 × 23	16	38	112	64	32	152	89	32	16	18	10
W200 × 25	16	38	112	64	32	134	70	32	16	18	10
W200 × 30	19	45	121	54	38	134	70	32	19	21	13
W254 × 31	19	45	134	76	38	146	70	38	19	21	13
W254 × 37	19	48	134	76	38	146	70	38	19	21	13
W305 × 40	19	48	134	76	38	165	89	38	19	21	13

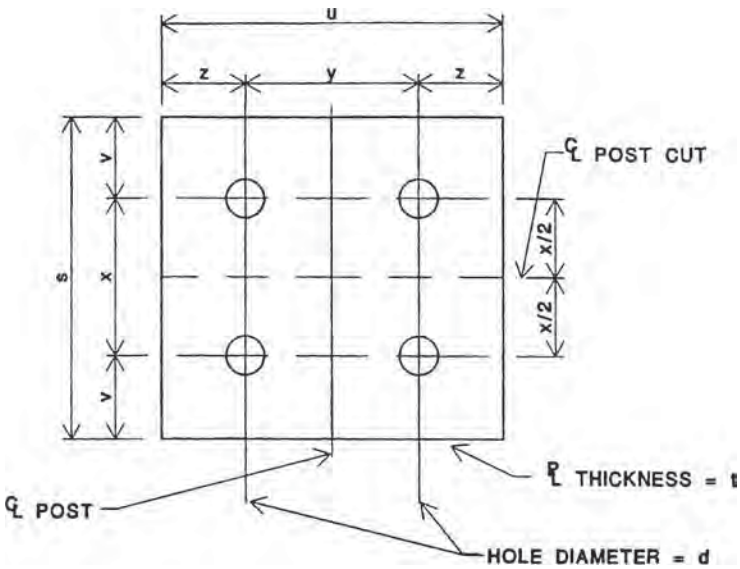

FIGURE 7.52 Design of hinge plate. (See Table 7.17 for dimensions.)

www.EngineeringEBooksPdf.com

TABLE 7.17 Specification of Hinge Plate Design

a. Specification in U.S. Customary units; dimensions in in; see Fig. 7.52

Post size, in × lb/ft	Bolt diameter	Bolt length	*S*	*U*	*V*	*X*	*Y*	*Z*	*d*	*t*
S3 × 5.7	½	1½	3¾	2⅝	1⅛	1½	1⅜	⅝	5/16	9/16
S4 × 7.7	½	1½	3¾	2⅝	1⅛	1½	1⅜	⅝	5/16	9/16
W6 × 8.5	½	1½	4¼	4	1⅛	2	2¼	⅞	¼	9/16
W6 × 12	½	1½	4¼	4	1⅛	2	2¼	⅞	5/16	9/16
W6 × 15.5	⅝	1½	5	6	1¼	2½	3½	1¼	5/16	11/16
W8 × 17	⅝	1½	5	5¼	1¼	2½	2¾	1¼	5/16	11/16
W8 × 20	¾	1¾	5½	5¼	1½	2½	2¾	1¼	⅜	13/16
W10 × 21	¾	1¾	6	5¾	1½	3	2¾	1½	⅜	13/16
W10 × 25	¾	1⅞	6	5¾	1½	3	2¾	1½	7/16	13/16
W12 × 27	¾	1⅞	6	6½	1½	3	3½	1½	7/16	13/16

b. Specification in SI units; dimensions in mm; see Fig. 7.52

Post size, mm × kg/m	Bolt diameter	Bolt length	*S*	*U*	*V*	*X*	*Y*	*Z*	*d*	*t*
S76 × 8	13	38	95	67	29	38	35	16	15	8
S100 × 11	13	38	95	67	29	38	35	16	15	8
W150 × 13	13	38	108	102	29	51	57	23	15	6
W150 × 18	13	38	108	102	29	51	57	23	15	8
W150 × 23	16	38	127	152	32	64	89	32	18	8
W200 × 25	16	38	127	133	32	64	70	32	18	8
W200 × 30	19	45	140	133	38	64	70	32	21	10
W254 × 31	19	45	152	146	38	76	70	38	21	10
W254 × 37	19	48	152	146	38	76	70	38	21	11
W305 × 40	19	48	152	165	38	76	89	38	21	11

rigidity necessary for proper operation. This includes providing sufficient resistance to activate the hinge and to prevent intrusion of the sign and impacted support into the passenger compartment. Proper hinge activation also requires that no portion of the primary sign, or any supplemental signs, be attached to the support posts below the hinge. In addition, no portion of the sign panel should extend lower than 7 ft (2100 mm) above ground level.

Fastening of sign panels to multisupport sign systems usually requires the use of stiffeners to provide the required rigidity. The exception to this is for relatively small surface area signs, which require multiple supports because of their shape, and for wooden signs. Consult state specifications for installation requirements. Clamps are used to fasten the stiffeners to S- or W-shaped beam posts, eliminating the need to drill into the post itself. Fastening details using aluminum Z-bar as the stiffener were presented in Fig. 7.43, with other common methods presented in Figs. 7.44 and 7.45. U-channel posts can also be used as stiffeners for large signs. When U-channel is used, it should be galvanized and should weigh no more than 2.5 lb/ft (3.7 kg/m). U-channel of 2.0 lb/ft (3 kg/m) is sufficiently strong to withstand wind loads of 70 mi/h (130 km/h).

Figure 7.53 presents the configuration of stiffeners for various sign sizes on a dual multiple-support system. Signs with a height of 24 in (600 mm) or more should be reinforced with two stiffeners placed a distance of one-fourth the sign height from the top and bottom of the sign. The stiffeners should not extend closer than 2 in (25 mm) to the sign edge. Supplementary signs, added to the bottom of the primary sign, should

www.EngineeringEBooksPdf.com

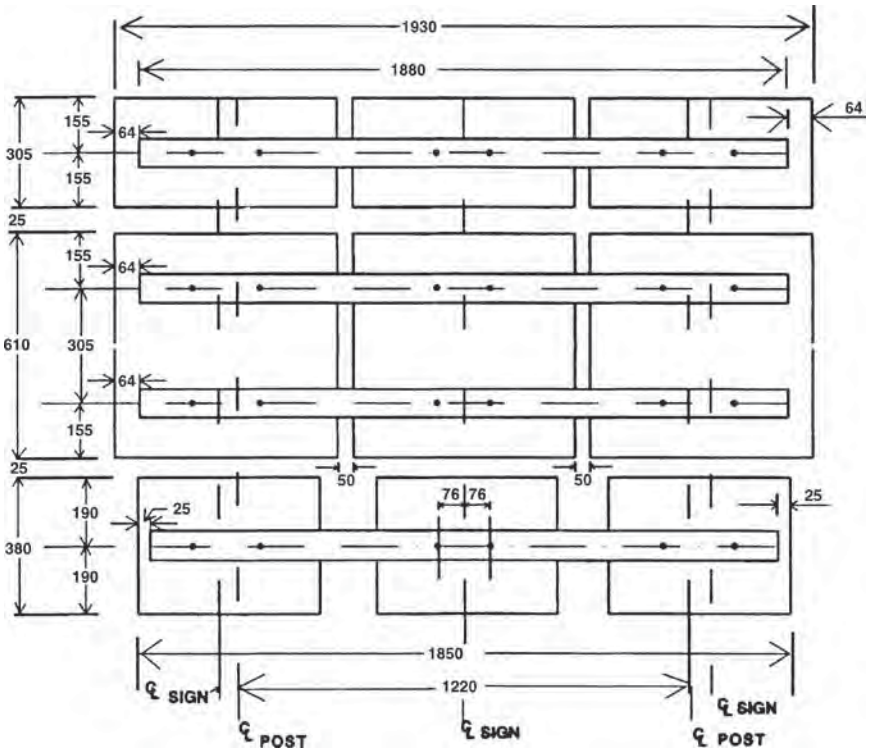

FIGURE 7.53 Example showing placement of sign stiffeners. Dimensions shown as mm. Conversions: 25 mm = 1 in, 50 mm = 2 in, 64 mm = 2.5 in, 76 mm = 3 in, 155 mm = 6⅛ in, 305 mm = 12½ in, 190 mm = 7⅝ in, 380 mm = 15¼ in, 610 mm = 24½ in, 1220 mm = 48 in, 1850 mm = 72 in.

be attached to the sign stiffeners and not to the posts. Signs should never be allowed to extend above and below the hinge at the post. Extending the sign at the hinge can cause the hinge to bind and improper operation upon impact.

7.10 GUIDELINES FOR MULTIPLE–SIGN-SUPPORT CONSTRUCTION

The following guidelines should be followed for multiple–sign-support construction:

- Multimount sign supports are designed to function properly when more than one support is struck by an errant vehicle. There will be occasions, however, where only one support will be impacted. When this occurs, it is necessary that the sign panel be properly fastened and have sufficient rigidity so that the post(s) that are not impacted will support the sign panel, preventing intrusion into the vehicle.
- The hinge should be located at least 7 ft (2100 mm) above the ground to prevent the upper section of the support from penetrating the windshield.

www.EngineeringEBooksPdf.com

- No portion of the primary sign, additional signs, or bracing should be attached to the supports below the hinges. Fastening below the hinge will interfere with the breakaway performance of the support post. Signs that are mounted to the primary sign panel and are less than 7 ft (2100 mm) above the ground can intrude into the passenger compartment even when the hinge operates correctly. Supplemental sign panels should not, therefore, be less than 7 ft (2100 mm) above the ground.
- Two posts within a 7-ft (2100-mm) path should each have a mass that does not exceed 18 lb/ft (27 kg/m).
- Slip base mechanisms must be constructed with the proper size bolts and washers. Oversized bolts can result in bending between the upper and lower base plates. Washers that are too thin can deform into the slots and bind the plates together.
- The torque specifications must be followed when assembling slip bases and hinges. With insufficient torque, wind and ice loads can cause the bolts to become loose, with subsequent "blowdown" from hinge release or "walking" at the slip base. Applying too much torque can result in binding between the mating surfaces, with subsequent improper operation upon impact.
- Crash tests, performed on level terrain, indicate that breakaway designs perform satisfactorily upon impact. When installed on slopes, however, there is the possibility that they may not function as planned. This is due to the slope's changing the trajectory of the impacting vehicle from the test conditions achieved with level ground. Multiple-mount signs should be installed on level ground when possible and outside the clear zone, in a location where they will be least likely to be hit. Some state agencies routinely require multimount signs to be installed 40 ft (12 m) or more from the edge of the traveled way.
- Follow the installation plans of multiple-mount supports for both construction and maintenance. Do not make temporary maintenance repairs using wrong size bolts or shear plates. Temporary repairs often become permanent, or at any rate can be subjected to an impact prior to correction.
- Do not install any sign supports in a ditch line. The water funneled in the ditch will cause premature corrosion and can freeze, preventing proper operation. The ditch can also channel errant vehicles and guide them into the support.
- Multiple-mount sign support systems are often classified as dual and triple installations. This classification refers to the number of posts permitted within a 7-ft (2100-mm) radius. Approval of support types for dual installation, for example, indicates that no more than two of these supports are permitted within a 7-ft (2100-mm) radius of each other. Acceptable impact performance can be achieved by reducing, but never increasing, the number of supports. A support type approved for dual use can be installed as a single-mount post but not as a triple installation.
- Multimount supports installed with slip base and/or frangible coupler designs must have a maximum height of 4 in (100 mm), over a span of 5 ft (1.5 m), from the ground to the topmost part of the anchor. This is necessary to prevent the anchor piece from snagging the undercarriage of impacting vehicle.
- Each post of a hinge design should be fabricated from a continuous piece of material. The holes for the friction and hinge plates should be drilled and sections matchmarked before cutting and weatherproofing. The match marks must be visible after weatherproofing.
- Supports, posts, and anchor pieces should be fabricated and assembled in a shop to ensure proper alignment and match of base plates. Any dismantling that may be required necessitates the placement of match marks to ensure reassembly in the original manner.

www.EngineeringEBooksPdf.com

- Each post should be installed as a unit to ensure proper alignment of the post and anchor piece assemblies.
- Proper functioning of the slip base feature requires that the interior washers, between the post slip plate and the anchor piece slip plate, transfer the bearing pressures equally. After assembly, the upper and lower slip plates should have a clearance between them of at least ⅛ in (3 mm) but not in excess of ¼ in (7 mm).
- All bolts for attaching the signs to the stiffeners should be 5⁄16 in (8 mm) placed in bolt holes of ⅜ in (10 mm). Flat washers should be used beneath the head of hex head bolts. Fiber washers should be used beneath the head of carriage bolts to prevent possible damage to the reflective sheeting when tightening. All bolts should be sufficiently long to allow the bolt to extend beyond the nut when tightened correctly.

7.11 SIGN VANDALISM PROBLEMS AND COUNTERMEASURES

Sign vandalism costs millions of dollars each year in increased maintenance costs and is a contributing cause to many accidents as well. In addition to the accident itself, vandalized signs can expose the roadway agency and municipality to tort liability cases. Surveys of state and local agencies indicate that an average of 30 percent of all sign replacement and repair is due to vandalism and that an average of 30 percent of the sign maintenance budget is required for vandalized signs. Acts of sign vandalism are categorized as destruction, mutilation, and theft [16].

7.11.1 Destruction

Destruction occurs when the sign support or sign face is physically damaged to the extent that it no longer serves its intended purpose. Destruction vandalism includes damage from

- Gunshot
- Thrown projectiles such as rocks and bricks
- Sign bending
- Sign or support burning
- Deliberate sign or support knockdown
- Sign cutting with snips or saw
- Support twisting that results in improper orientation
- Support cutting

7.11.2 Mutilation

Sign mutilation occurs when the installation is altered or defaced in such a manner that the sign is illegible or loses its nighttime retroreflectivity characteristics. Examples of sign mutilation include

- Application of paint by spray or brush
- Application of unauthorized stickers or decals

www.EngineeringEBooksPdf.com

- Contamination by caustic substances
- Alteration of sign legend by crayon, lipstick, or ink markers
- Reorientation of the sign panel
- Scratching the sign surface
- Peeling or removing reflective sheeting

7.11.3 Theft

Theft is the unauthorized removal of a sign assembly or any of its parts. Some common reasons for theft include

- Home decoration
- Relationship of the sign legend to an individual's name or interests
- Construction or scrap value of the wood, aluminum, or metal parts
- Firewood
- Uniqueness of the sign legend

7.11.4 Techniques to Reduce Vandalism

Techniques to reduce incidents of sign vandalism include steps that address the reasons for vandalism, enable the prosecution of offenders, ease maintenance, and make it more difficult to perform the vandalism. Consider the following to reduce vandalism:

- The theft and damage to many street name signs is due to the similarity to someone's name. Vandalism to signs can often be reduced by adding St., Ave., or Blvd. to the sign.
- Use only standard signs. Signs that have an unusual message experience a higher vandalism rate.
- Use sign blank materials that are less susceptible to specific types of vandalism. Thicker-gage aluminum sign blanks can be used in areas that are subject to damage by bending. Plywood sign blanks are less susceptible to gunshots. Aluminum signs, when struck by gunshot, are indented over a ½-in-diameter (12.5-mm) circle per bullet hole, resulting in severe chipping and loss of reflectivity and legibility. Plywood signs remain legible even with numerous bullet holes. Plywood signs are also a less attractive target than aluminum signs, since they provide less noise and movement when used for target practice.
- Place an agency identification sticker on the back of each sign. This sticker should have a unique number for each sign, the agency name, whom to contact if the sign is found, and a warning about the legal consequences of stealing or damaging the sign. The identification sticker enables law enforcement officials to prosecute individuals stealing or vandalizing the sign. The date of installation can also be placed on the sticker for maintenance information.
- Apply protective coatings to the sign face to ease the removal of foreign substances. Clear coatings, such as product number 711 or 731 from the 3M Company, can be applied by spraying, roll coating, or hand brushing. Transparent overlay films such as Scotchlite brand graphic overlay (GOF™) from the 3M Company are also available. The clear coatings and overlays allow the removal of crayon, paint, lipstick, and other contaminants with the use of strong solvents that would normally harm uncoated sign face material.

www.EngineeringEBooksPdf.com

- Support twisting or removal can be reduced by installing approved supports of a heavier gauge and using anchor plates. Driven sign supports, as opposed to those installed by drilling and backfilling, are less susceptible to twisting.
- Use commercially available antitheft fasteners that make it difficult for vandals to remove signs. These fasteners include Tufnet, Teenut, aluminum fluted nuts, blind aluminum rivets, and Vandalgard nuts as illustrated in Figs. 7.54 through 7.56.

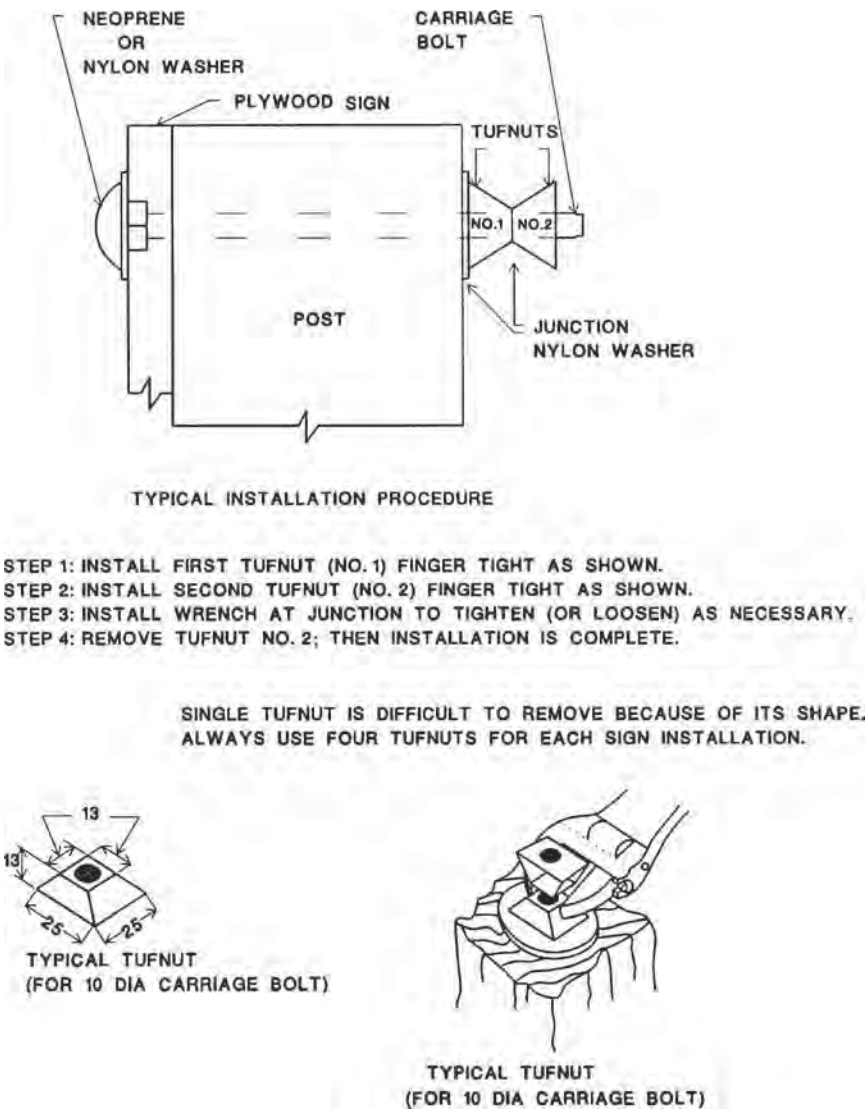

FIGURE 7.54 Tufnut sign fasteners. Dimensions shown as mm. Conversions: 10 mm = ⅜ in, 13 mm = ½ in, 25 mm = 1 in.

www.EngineeringEBooksPdf.com

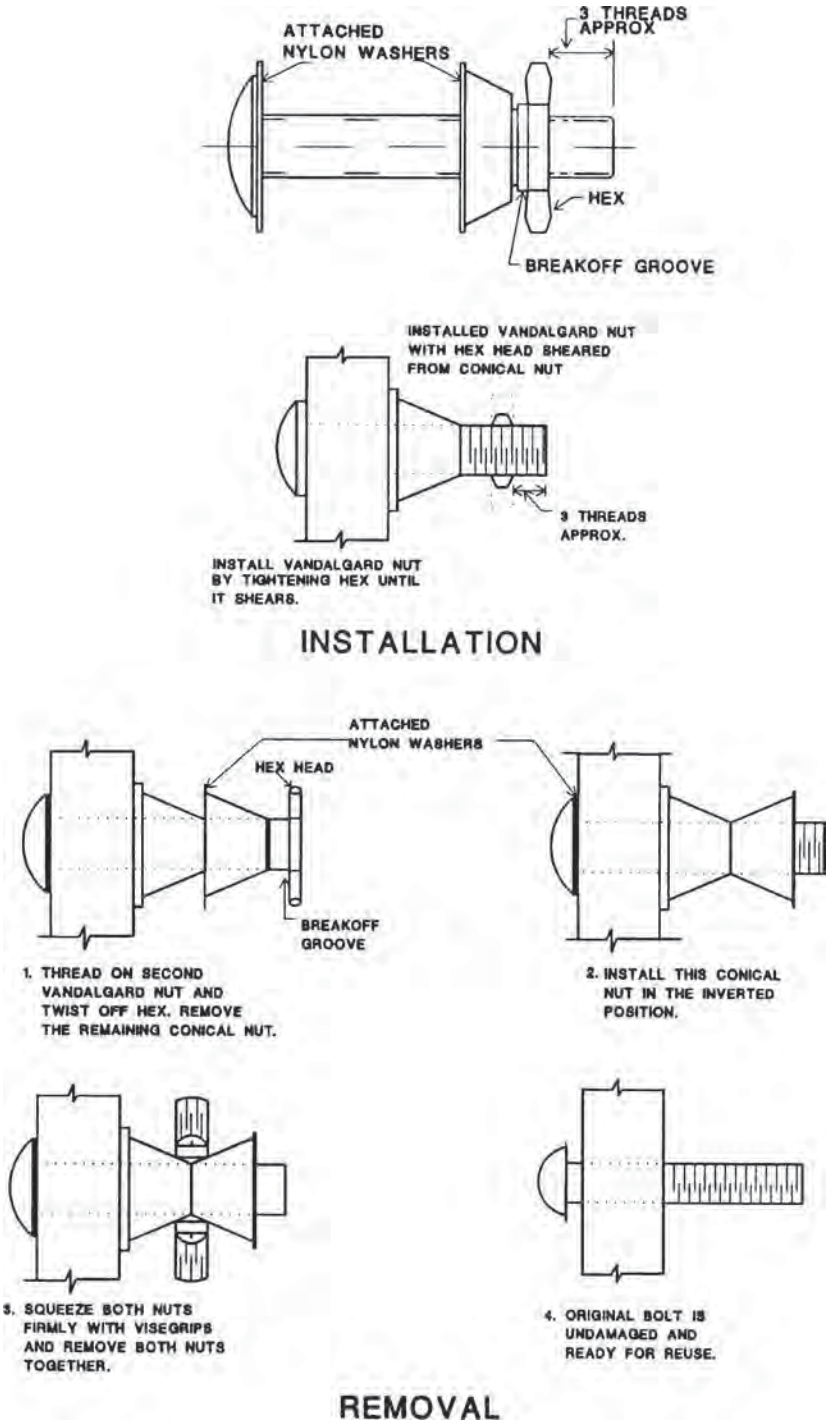

FIGURE 7.55 Vandalgard sign fastener.

www.EngineeringEBooksPdf.com

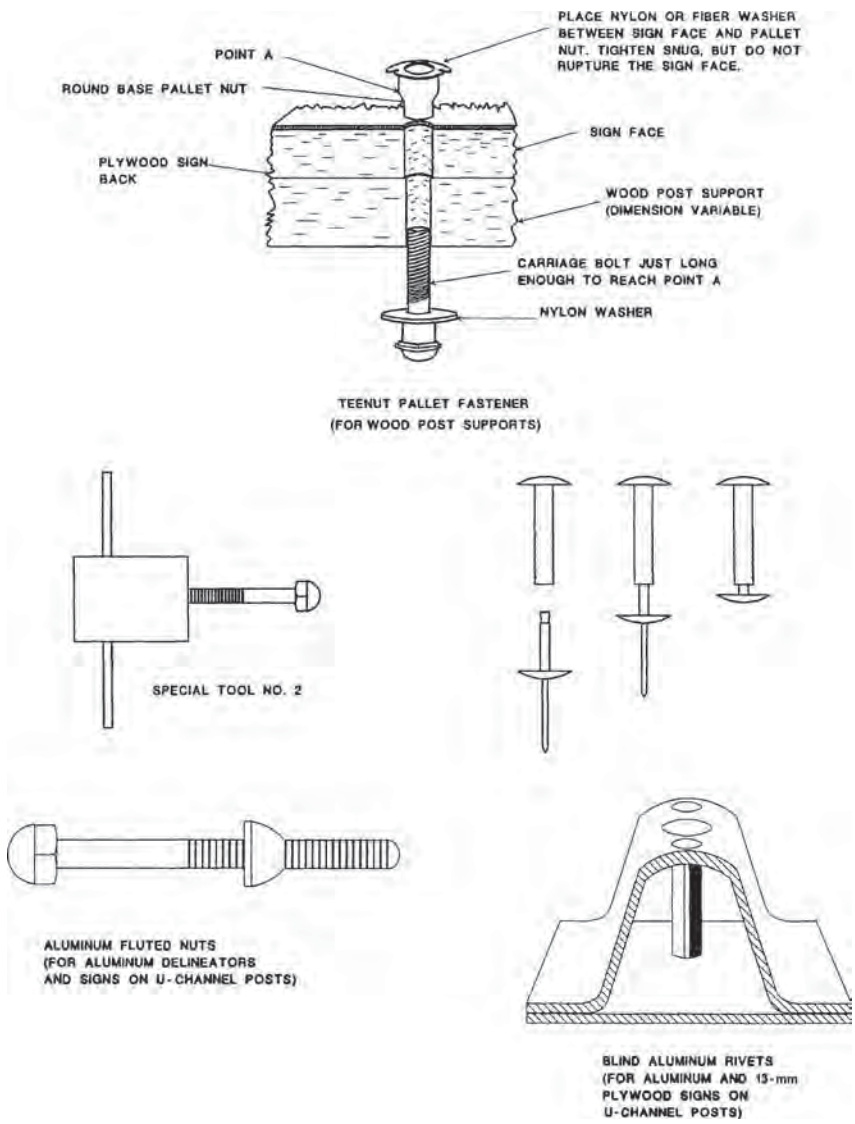

FIGURE 7.56 Teenut, aluminum fluted nut, and blind aluminum rivet sign fasteners.

7.12 MAINTENANCE OF TRAFFIC SIGNS

Continuing maintenance is required to ensure that traffic signs function for their intended purpose. Proper maintenance of all signs is important since the condition of the signs is a visual statement on the competency of the roadway agency. Regulatory and warning signs that are missing or in poor condition pose safety hazards to

www.EngineeringEBooksPdf.com

motorists and can result in tort liability. Regulatory and warning signs must be repaired as soon as a defect is noticed. All of the signs on an agency's roadway system should be inspected periodically to determine that their orientation and retroreflectivity properties are adequate for nighttime visibility.

Damage to traffic signs can occur as the result of environmental and wind load, accidents, improper installation, end of effective service life, and vandalism. Repairs can be required for the sign panel, the sign support, or both.

7.12.1 Repair and Replacement of Sign Panels

The decision on the appropriate action for damaged sign panels is a field judgment. Minor bending of a sign will prevent headlights from illuminating the sign at night. Signs with minor bends can be repaired by removing the sign from the post and straightening the sign. Signs that are badly bent cannot be properly repaired in the field. Attempts to straighten badly bent signs result in cracking and peeling of the sign face material. Many agencies consider it more economical to replace rather than repair signs that maintenance workers judge to be badly worn or damaged [46].

There are field repair kits available with pressure-sensitive reflective background sheeting and die-cut pressure-sensitive prespaced letters, borders, and symbols. It is often difficult, however, to properly apply these materials under field conditions. In addition to the difficulty of field repairs, a regulatory or warning sign should be placed on the post while repairs are being made. This sign may as well be a replacement sign and a more economical and durable repair made in the controlled environment of a shop operation. Do not take down a sign without immediately positioning a replacement. Extra signs should be placed in the service truck prior to leaving the garage. If field replacement of reflective sheeting is performed, however, the proper procedure provided by the manufacturer must be followed.

7.12.2 Sign Cleaning

Sign legibility can be restored or improved by general cleaning and removal of foreign substances from the sign face. Sign cleaning products are commercially available for use in removing common soil and severe contaminants such as paint and adhesives. In the majority of cases the required cleaning products can be obtained from local hardware stores. Strong solvents and incomplete removal of the contaminant can damage the sign reflectivity. Strong solvents should be trial-tested prior to application on the sign. The following steps can be used to clean signs of common soil and some contaminants [47]:

- General sign cleaning: Mild, nonabrasive cleaners and detergents suitable for painted or enameled surfaces are recommended for removal of common soil. Cleaners should be free of strong aromatic solvents or alcohols and be chemically neutral (pH of 6 to 8 is recommended).
- Pollen and fungus can be removed by washing the surface with 3 to 5 percent solutions of laundry bleach (sodium hypochlorite). This should be followed with detergent wash and a clear water rinse.
- Lipstick, crayon, tar, oil, bituminous materials, and some oil-based paints can often be removed with mild solvents such as mineral spirits (toluene), kerosene, heptane, or naphtha. Wipe the contaminated area lightly with a soft cloth saturated with the solvent. Continue wiping lightly until the contaminant is removed. If this does not work, then try the next step.

www.EngineeringEBooksPdf.com

- Wipe the contaminated area with a soft cloth moistened with lacquer thinner. Continue wiping lightly until the contaminant is removed.
- A nighttime reflectivity check or a nighttime visual inspection of all signs from which contaminants have been removed should be conducted.

7.12.3 Patching Holes and Punctures

It is not necessary to repair each hole in a sign. When a hole does not damage the message or symbol and does not create the impression of a sloppy sign, then repair may not be needed. The following procedures can be used to make field repairs on signs.

Retroreflective Aluminum Sign Panels

- Remove all damaged background sheeting and legend. Usually this means about 1 in (25 mm) from the edge of the hole. A retractable-blade knife is a useful tool for this.
- Straighten the sign (flatten out the hole puncture nipple area) using a ball peen hammer and a flat surface (truck bed, trailer bed, or a fender dolly).
- Remove any additional sheeting damaged during straightening.
- Clean the entire area with xylol; then apply varnish maker's and painter's (VM&P) naphtha.
- Patch the hole or puncture on both sides of the sign backing material using 3M Company No. 425 UAL aluminum foil tape or equal. Use a squeegee to apply firm pressure on both sides of the sign. On large holes, start placing the foil at the bottom of the hole, overlapping each strip about ¼ in (6 mm) in shingle fashion as you move up, and cover the hole area.
- Apply retroreflective background sheeting, extending it at least ½ in (13 mm) beyond the foil tape strips.
- Replace damaged legend with die-cut, pressure-sensitive, prespaced letters, borders, or symbols and firmly squeegee them into place.
- Seal edge of new background sheeting and legend with 3M Company No. 700 edge sealer or equal. If the sign is subject to snow burial and replacement sheeting extends to the edge of sign, place 3M Company transparent film (No. 639 or equal) along that top edge.

Instead of making small patches to signs with holes, a portable double-roller unit for applying a full-sized sign face to a sign blank in the field can be used. After patching the holes, remove the paper material protecting the adhesive backing. Carefully align the new sign face sheet with one edge of the sign blank and spread the new sign face over the sign blank as smoothly as possible by hand. Then crank the sign blank with new sign face through the portable roller unit to properly pressure-seat the new sign face. Seal the edge of the new sheeting if necessary.

Retroreflective Plywood Panel Signs

- Remove all loose wood on both sides of the sign and all damaged sheeting.
- Fill holes with wood filler, let the surface set, and sand smooth if you think the holes need to be filled for a field repair. Allow filler to harden. Small holes can be covered by foil tape without filling.
- Wipe areas with clean cloth.

www.EngineeringEBooksPdf.com

- Cover holes on both sides of the plywood sign blank with 3M Company No. 425 UAL aluminum foil tape or equal. Apply firm pressure to the tape on both sides of the plywood sign back using a squeegee. On large holes, start placing the foil at the bottom of the hole, overlapping each strip about ¼ in (6 mm) in shingle fashion as you move up and cover the hole area.
- Apply retroreflective background sheeting, extending it at least ½ in (13 mm) beyond the foil tape strips on the face of the sign.
- In the area covered by the patching, replace any damaged legend with die-cut, pressure-sensitive, prespaced letters, borders, or symbols and firmly squeegee them in place.
- Seal edge of new background sheeting and legend with 3M Company No. 700 edge sealer or equal. If the sign is subject to snow burial and replacement sheeting extends to the top edge of the sign, place 3M Company transparent film (No. 639 or equal) along the top edge.
- Lightly spray a sealing film of flat black enamel paint (use an aerosol can) over the aluminum foil tape covering the holes on the back of the sign panel. Be careful to keep paint off the front sign face, because paint will destroy the night retroreflection. If your agency paints plywood sign backs some color other than black, use an appropriate color if possible.

7.12.4 Sign-Support Straightening

A tool such as that shown in Fig. 7.57 can be constructed out of pipe to straighten twisted U-channel posts [48]. Similar devices with a metal U-shape at the end of a pipe handle can be constructed to realign shaped wood posts and square tubing. A large pipe wrench can also be used to realign U-channel and square-tube supports. Small signs should be mounted at 90° to the road.

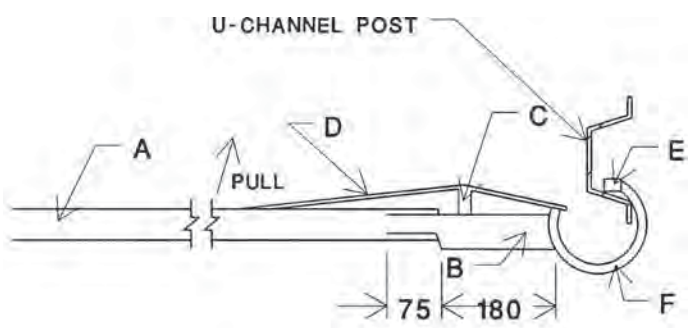

	SI Units, mm	U.S. Customary Units, in
A.	1 Pc – 38 I.D. BLACK PIPE – 1270 LONG	1.5 I.D.— 48
B.	1 Pc – 16 × 75 × 255 LONG	5/8 × 3 × 10
C.	1 Pc – 20 × 20 × 15 LONG	3/4 × 3/4 × 1/2
D.	1 Pc – 6 × 20 × 510 LONG	1/4 × 3/4 × 20
E.	1 Pc – 10 × 10 × 75 LONG	3/8 × 3/8 × 3
F.	1 – CLEVIS SLIP HOOK (REMOVE EYE)	

FIGURE 7.57 Shop-fabricated tool to straighten twisted U-channel.

www.EngineeringEBooksPdf.com

7.13 REFERENCES ON SIGNING

1. *Manual on Uniform Traffic Control Devices,* American Association of State Highway Officials and National Conference on Street and Highway Safety, Washington, D.C., 1935.
2. *Manual on Uniform Traffic Control Devices for Streets and Highways,* Federal Highway Administration, U.S. Department of Transportation, Washington, D.C., 2003.
3. *Traffic Control Devices Handbook,* Federal Highway Administration, U.S. Department of Transportation, Washington, D.C., 1983.
4. Bowman, Brian L., *NCHRP Synthesis of Highway Practice 186: Supplemental Advance Warning Devices,* Transportation Research Board, National Research Council, Washington, D.C., 1993.
5. Harwood, Douglas W., *NCHRP Synthesis of Highway Practice 191: Use of Rumble Strips to Enhance Safety,* Transportation Research Board, National Research Council, Washington, D.C., 1993.
6. Cunard, Richard A., *NCHRP Synthesis of Highway Practice 157: Maintenance Management of Street and Highway Signs,* Transportation Research Board, National Research Council, Washington, D.C., 1990.
7. "1988 Annual Report on Highway Safety Improvement Programs," Report of the Secretary of Transportation to the United States Congress, Report No. FHWA-SA-88-0003, Federal Highway Administration, U.S. Department of Transportation, Washington, D.C., 1988.
8. Lewis, Russel M., *NCHRP Synthesis of Highway Practice 106: Practical Guidelines for Minimizing Tort Liability,* Transportation Research Board, National Research Council, Washington, D.C., 1983.
9. *Standard Highway Signs, Including Pavement Markings and Standard Alphabets*, 2004 Version, U.S. Department of Transportation. Federal Highway Administration, Washington, D.C., 2004.
10. *Roadside Design Guide,* American Association of State Highway and Transportation Officials, Washington, D.C., 2002.
11. *Delphi V—Forecast and Analysis of the U.S. Automotive Industry through the Year 2000,* University of Michigan Transportation Research Institute, Ann Arbor, July 1989.
12. *Standard Specifications for Structural Supports for Highway Signs, Luminaires and Traffic Signals,* American Association of State Highway and Transportation Officials, Washington, D.C., 2001, and Interim Specifications, 2002, 2003, and 2006.
13. Mickie, J. D., "Recommended Procedures for the Safety Performance Evaluation of Highway Appurtenances," NCHRP Report 230, Transportation Research Board, Washington, D.C., March 1987.
14. Ross, Hayes, Jr., Dean L. Sicking, Richard A. Zimmer, and Jarvis D. Mickie, "Recommended Procedures for the Safety Performance Evaluation of Highway Features," NCHRP Report 350, Transportation Research Board, National Research Council, Washington, D.C., 1993.
15. Cunard, Richard A., *NCHRP Synthesis of Highway Practice 157;* Maintenance Management of Street and Highway Signs, Transportation Research Board, National Research Council, Washington, D.C., 1990.
16. Perkins, David, D., "Manual on Countermeasures for Sign Vandalism," Report No. FHWA-IP-86-7, Federal Highway Administration, Washington, D.C., September 1986.
17. Texas Transportation Institute, "State of the Practice in Supports for Small Highway Signs," Technology Sharing Report 80-222, Federal Highway Administration, Washington, D.C., 1980.
18. Heinz, Ronald E., "Request for Technical Assistance: Sign Support Design," Memorandum, Federal Highway Administration, Highway Design Division, Washington, D.C., July 1985.
19. Hayes, E. Ross, Jr., Jesse L. Buffington, et al., "State of the Practice in Supports for Small Highway Signs," Federal Highway Administration, Washington, D.C., 1980.

www.EngineeringEBooksPdf.com

20. Composite Technologies Company, *Signs Manufactured from 100% Landfill-Destined Plastic,* undated brochure, Composite Technologies Company, Dayton, Ohio.

21. *Standard Specifications for Highway Signs, Luminaires and Traffic Signals,* American Association of State Highway and Transportation Officials, Technical Committee, Washington, D.C., 1985.

22. Phillips, David K., "Steel Flanged Channel Posts for Small Highway Sign Supports," technical advisory, Federal Highway Administration, Office of Engineering, Washington, D.C., September 27, 1983.

23. Staron, L. A., "Minute Man Breakaway Device," letter, Federal Highway Administration, Federal Aid and Design Division, Washington, D.C., January 1987.

24. Heinz, Ronald E., "Splicing of U-Channel Steel Posts," memorandum, Federal Highway Administration, Highway Design Division, Washington, D.C., October 1984.

25. Noel, Leon M., "Timber Sign Supports," letter, Federal Highway Administration, Highway Design Division, Washington, D.C., August 1982.

26. Hove, R.W., "Ground Mounted Signs: Timber Sign Supports," memorandum, Federal Highway Administration, U.S. Department of Transportation, Washington, D.C., May 1984.

27. Allied Tube and Conduit, *Qwik-Punch and Qwik-Coat Systems,* Harvey, Ill., January 1991.

28. Noble, Glen, "Support System Acceptance," memorandum, Unistrut Corporation, Wayne, Mich., November 1992.

29. Staron, L. A., "Quick-Punch Sign Supports," letter, Federal Highway Administration, Federal Aid and Design Division, Washington, D.C., October 3, 1986.

30. Xcessories Squared, *Soil Stabilizer* (brochure), Auburn, Ill., February 23, 1995.

31. Staron, Lawrence A., Geometric and Roadway Acceptance Letter No. SS-25, Federal Highway Administration, Federal Aid and Design Division, Washington, D.C., June 4, 1991.

32. Staron, L. A., Geometric and Roadside Design Letter No. SS-38, Federal Highway Administration, Federal Aid and Design Division, Washington, D.C., November 1993.

33. Dent Bolt, Trinity Industries, Inc., Highway Safety Products, Dallas, Tex.

34. Staron, L. A., ACTION: Breakaway Sign Supports, memorandum, Federal Highway Administration, Federal Aid and Design Division, Washington, D.C., September 1993.

35. *Franklin Steel Eze-Erect™ Sign Posts,* Franklin Steel, Franklin, Pa., May 1989.

36. *The Minute Man™ U-Channel Breakaway Signpost System,* Marion Steel Co., Marion, Ohio, 1992.

37. Staron, L. A., "Splicing of Steel U-Channel Posts on Small Sign Supports," memorandum, Federal Highway Administration, Federal Aid and Design Division, Washington, D.C., September 1991.

38. *Unistrut-Telespar™ Sign Support System,* Unistrut Corporation, Wayne, Mich., 1986.

39. *Allied Square Tube Signposts,* Allied Tube and Conduit, Harvey, Ill., February 1992.

40. *14 Ga. Qwik-Punch System,* Allied Tube and Conduit, Harvey, Ill., September 1991.

41. *Roadside Improvements for Local Roads and Streets,* Office of Highway Safety, Federal Highway Administration, Washington, D.C., October 1986.

42. Staron, L. A., Geometric and Roadside Acceptance Letter No. SS-27, Federal Highway Administration, Federal Aid and Design Division, Washington, D.C., May 1992.

43. Staron, L. A., Geometric and Roadside Acceptance Letter No. LS-23, Federal Highway Administration, Federal Aid and Design Division, Washington, D.C., January 1991.

44. Van Ness, Norman, Acceptance Letter to Southwest Pipe Inc., Highway Design Division, Federal Highway Administration, Washington, D.C., July 1986.

www.EngineeringEBooksPdf.com

45. Hanna, Howard, "Evaluation of the Upper Hinge Mechanism of Multiple Leg Breakaway Sign Supports," memorandum, Federal Highway Administration, Program Development Division, Washington, D.C., October 1987.

46. "Maintenance of Small Traffic Signs—A Guide for Street and Highway Maintenance Personnel," Federal Highway Administration, Report No. FHWA-RT-90-002, Washington, D.C., 1991.

47. Nettleson, Tom, *Signs Maintenance Guide,* Forest Service, U.S. Department of Agriculture, October 1979.

48. McGee, H. W., et al., "Sign Fabrication, Installation and Maintenance," Federal Highway Administration, Report No. FHWA-SA-91-033, Washington, D.C., May 1992.

49. Horne, Dwight A., "Slip Base Triple Square Supports in Standard Soil," Letter No. SS68B, U.S. Department of Transportation, Federal Highway Administration, Washington, D.C., 2004.

www.EngineeringEBooksPdf.com

CHAPTER 7
SIGNING AND ROADWAY LIGHTING

PART 2

ROADWAY LIGHTING

C. Paul Watson, P.E.
Formerly, State Electrical Engineer
Alabama Department of Transportation
Montgomery, Alabama

Nelson Russell, P.E.
Manager, Electrical Department
Volkert & Associates
Mobile, Alabama

Brian L. Bowman, Ph.D., P.E.
Professor of Civil Engineering
Auburn University
Auburn, Alabama

Part 2 of this chapter presents considerations in the selection of lighting for freeways and other types of roadways. Both standard and high mast lighting are addressed. Roadside safety and the application of various types of bases are discussed and illustrated. Information on construction, acceptance testing, and maintenance is presented. An extensive list of references, which are noted in the text, concludes the section. Portions of this material were derived from studies made under a Federal Highway Administration Project, "Design, Construction and Maintenance of Highway Safety Features and Appurtenances."

7.14 BENEFITS AND FUNDAMENTALS OF LIGHTING

Properly designed and installed roadway lighting can result in significant reductions in nighttime traffic accidents, act as a deterrent to crime, increase commercial activity,

www.EngineeringEBooksPdf.com

and improve aesthetic value. Roadway lighting increases traffic safety by enhancing the visibility of potential roadway hazards, other vehicles, pedestrians, and roadway geometrics. Pedestrians are among the largest beneficiaries of lighting installed on urban streets. Studies indicate reductions of up to 80 percent in pedestrian accidents and reductions ranging from 20 to 40 percent for all types of night accidents [1]. Another study identified a 40 percent reduction in the ratio of night accidents to day accidents resulting from the installation of roadway lighting on freeways [2]. While these figures are significant, it is anticipated that the safety benefits derived from the installation of roadway lighting will become even more pronounced in the future. This is due to the increasing age of the driving population and the significantly reduced visual abilities of persons over 65 years of age. The savings realized by accident prevention alone can often justify the costs of a modern lighting system [3].

Although much progress has been made in improving lighting system efficiency and effectiveness, there are still many streets, particularly in small communities, that are not lighted in accordance with present guidelines. This is primarily due to the scarcity of local funds, which can be mitigated by the use of federal funds on qualifying projects. Roadway lighting has been recognized as a viable countermeasure for increasing traffic safety since 1966, when federal legislation enabled federal aid expenditures for construction and maintenance of roadway lighting [4].

The benefits of providing roadway lighting include enhancing traffic safety, improving pedestrian visibility, deterring crime, improving commercial interests, and promoting community pride. The actual benefits obtained are dependent upon the type of facility and area in which the lighting will be installed. Only the traffic operational and safety benefits obtained from the proper design and installation of roadway lighting are discussed in this chapter. It should be noted that properly designed and installed roadway lighting can result in roadway facilities operating almost as efficiently and safely at night as during the daytime. Lighting cannot, however, be expected to achieve the same safety levels as daytime operation, because of the influence of other factors, such as fatigue, higher speeds, and intoxication, which make a greater contribution to nighttime accident frequency.

7.14.1 Visibility: Luminance, Illuminance, and STV

The requirement of adequate visibility is essential for safe traffic operations during both day and night operation. Visibility can be separated into at least three classifications when applied to highway driving: perception, recognition, and decision making [5]. Perception involves the condition of our eyes, the quantity and the direction of the available light, size of the object being viewed, contrast of the object against its background, and the time available for viewing the object. Effective roadway lighting can aid in these tasks by providing the quality of light required by the human eye to increase its visual acuity.

The practice of roadway lighting in the United States is governed by tenets published in the ANSI/IESNA RP-8, *American National Standard Practice for Roadway Lighting.* In all the editions of RP-8 published from its inception in 1928 through 1983, the criteria for roadway lighting design were based on illuminance (horizontal footcandles). Illuminance is a measure of the amount of light that falls upon a roadway surface. In the 1983 version of the document, alternative criteria were used—one in terms of illuminance (footcandles or lux) and the other in terms of pavement luminance measured in candelas per square meter (cd/m^2). The preferred method was luminance since it more accurately described that which is perceived by the human eye. Further research into visibility has led to a new concept and provides alternative design criteria that may be used. This alternative set of criteria is based on the concept of providing an adaptation level on and adjacent to the roadway that aids in recognition of low-contrast objects.

www.EngineeringEBooksPdf.com

The visibility of a stationary object on the roadway of a fixed size and uniform luminance is a function of the following:

1. The contrast between the luminance of the object and its immediate visual background
2. The general level of adaptation of that portion of the retina of the eye concerned with the object
3. The amount of veiling luminance (disability glare) entering the eye
4. The difference in eye adaptation between successive eye movements (transient adaptation)
5. The size, shape, and color of the object
6. The background complexity and the dynamics of motion
7. Visual capability of the roadway user

Visibility level (*VL*) is a metric used to combine mathematically the varying effects of the several factors listed above on the visibility of a standard observer. VL for an object at a particular location on the roadway viewed from a specified point and direction is the amount above the visibility threshold as seen by the observer. Visibility level is a ratio and has no units. The VL as commonly used is based on detection of a "small target" that is flat and 7 in (18 cm) on each side. *Small-target visibility* (*STV*) is the weighted average VL for an array of targets as calculated by the visibility mode. A full and complete discussion of the STV method is included in Annex F of RP-8-00 published by the Illuminating Engineering Society of North America, New York (www.iesna.org).

7.14.2 Warranting Conditions

The potential traffic safety benefits of lighting are due to an increase in driver comfort and confidence resulting from enhanced vision. This reduces driving stress and tension, increases roadway capacity, and reduces the potential for traffic accidents. The economic return of roadway lighting is greatest in urban and suburban areas with high traffic volumes. Rural locations can also benefit from full, or partial, lighting of decision points such as at isolated intersections, on- or off-ramps, and ramp terminals [3]. For some lighting applications there are warranting criteria that can be used to help determine when lighting should be installed.

Warranting conditions are based on minimum conditions which signify that providing lighting would be beneficial. Satisfying the warrants does not obligate an agency to provide lighting, since warrants are not the only criteria that should be considered. Local conditions such as frequent fog, ice, snow, roadway geometry, ambient lighting, sight distance, and signing could justify modifying the warrants either positively or negatively [3]. Judgments on lighting need should include an assessment of the anticipated benefits, traffic volume, speed, road use during the night, night accident rate, road geometrics, and general night visibility. Some agencies justify lighting based on an economic analysis. This requires placing monetary value on the expected reductions in personal injuries, fatalities, and property damage accidents, in addition to other societal benefits estimated to be realized from illumination.

Warranting conditions have been established for freeways. However, due to the wide diversity of conditions that can exist, there are no established warrants to assist the designer in determining when lighting should be provided for urban streets, highways, walkways, and bikeways. The justification for urban lighting is left to engineering judgment, coupled with perceived user needs and user benefits.

www.EngineeringEBooksPdf.com

7.14.3 Computer Programs

Available computer programs accurately design lighting systems using photometric curves and data for various fixtures. Some programs allow the user to input items such as trees and other physical barriers that may interfere with the output from the light fixtures. These programs will calculate luminance, illuminance, and glare. Dirt and maintenance factors that depend on the environment of the fixture location and the type of fixture are also used in the calculations. Some of the programs are easy to operate and very user friendly whereas some require much more detail. Computer-generated drawing files can be imported into the program, thus allowing the use of available site and roadway plans without the necessity of compiling a new drawing. Lighting manufacturers have made photometric data available from their company websites, and this information can be imported into the software program. After the design is completed, some programs are capable of providing a three-dimensional rendering showing a pictorial view of the proposed area. With the ease of obtaining all required input information, a lighting designer can experiment with the use of various fixture styles, wattages, and photometric patterns. Thus, the designer can obtain maximum light levels with consideration of both initial installation costs and annual operating costs, which include energy costs and maintenance items such as cleaning and lamp and ballast replacement.

7.15 FACILITY AND AREA CLASSIFICATIONS

The following descriptions of facility types and area classifications are used to describe the warranting conditions and design needs of roadway lighting.

7.15.1 Roadway, Pedestrian Walkway, and Bikeway Classifications [3, 6]

- *Freeway.* A divided major roadway with full control of access (no crossings at grade). This definition applies to toll as well as nontoll roads.
  - *Freeway A:* Roadways with greater visual complexity and high traffic volumes. Usually this type of freeway will be found in major metropolitan areas in or near the central core and will operate through some of the early evening hours of darkness at or near design capacity.
  - *Freeway B:* All other divided roadways with full control of access.
- *Expressway.* A divided major arterial highway for through traffic with full or partial control of access and generally with interchanges at major crossroads. *Parkways* are expressways for noncommercial traffic within parks and parklike areas.
- *Major.* That part of the roadway system that serves as the principal network for through-traffic flow. These routes connect areas of principal traffic generation and important rural roadways leaving the city. These routes are often referred to as *arterials, throughfares,* or *preferentials* and are sometimes subdivided into primary and secondary, but these distinctions do not affect the roadway lighting.
- *Collector.* Roadways serving traffic between major and local streets. These are streets used mainly for traffic movements within residential, commercial, and industrial areas. They do not handle long through trips. Collector streets may be used for truck or bus movements and give direct service to abutting properties.

www.EngineeringEBooksPdf.com

- *Local.* Roadways used primarily for direct access to residential, commercial, industrial, or other abutting property. They do not include roadways carrying through traffic. Long local roadways will generally be divided into short sections by collector roadway systems.
- *Roundabout.* A circular intersection with yield control of all entering traffic, channelized approaches, counterclockwise circulation, and appropriate geometric curvature to ensure that travel speeds on the circulatory roadway are typically less than 30 mi/h (50 km/h) [20].
- *Alleys.* A narrow public way within a block, generally used for vehicular access to the rear of abutting properties.
- *Sidewalks.* Paved or otherwise improved areas for pedestrian use, located within public street rights-of-way that also contain roadways for vehicular traffic.
- *Pedestrian ways.* Public sidewalks for pedestrian traffic generally not within rights-of-way for vehicular traffic roadways. Included are skywalks (pedestrian overpasses), subwalks (pedestrian tunnels), walkways giving access to park or block interiors, and crossings near centers of long blocks.
- *Bicycle lanes.* Any facility that explicitly provides for bicycle travel.

7.15.2 Pedestrian Conflict Area Classifications

The above classifications appropriately describe general conditions of vehicular traffic conflict in urban areas. A second type of conflict is vehicle/pedestrian interaction. The magnitude is mostly determined by the land use of the abutting properties. Three classifications of pedestrian night activity levels and types of land use with which they are typically associated are used in the lighting criteria tables:

High. Areas with significant numbers of pedestrians expected to be on the sidewalks or crossing the streets during darkness. Examples are downtown retail areas and areas near theaters, concert halls, stadiums, and transit terminals.

Medium. Areas where lesser numbers of pedestrians utilize the streets at night. Typical are downtown office areas; blocks with libraries, apartments, and neighborhood shopping; industrial areas; older city areas; and streets with transit lines.

Low. Areas with low volumes of night pedestrian usage. These can occur in any of the cited roadway classifications but may be typified by suburban single-family streets, very-low-density residential developments, and rural or semirural areas.

The choice of appropriate lighting levels is an engineering decision. If needed, 1-h pedestrian counts can be taken during the first hour of darkness. The volume of pedestrians that warrants increased lighting levels is not fixed but is a local option. However, the following volumes might be considered as a guide:

Low	10 or fewer
Medium	11 to 100
High	Over 100

These volumes represent the total number of pedestrians walking on both sides of the street plus those crossing the street at nonintersection locations in a typical block. The lighting levels at intersections are already considered by the increased illumination for the points of conflict.

www.EngineeringEBooksPdf.com

7.16 FREEWAY LIGHTING CONSIDERATIONS

Freeway lighting can substantially reduce accident frequency and increase capacity. Lighting is of additional benefit in freeway operations by providing motorists additional warning time of stalled or disabled vehicles on the roadway. A listing of the specific conditions considered by most authorities to warrant lighting is included below.

7.16.1 Warranting Conditions for Continuous Freeway Lighting

Continuous lighting along the freeway is warranted in the following cases:

Case CFL-1. On those sections in or near cities where the current average daily traffic (ADT) is 30,000 or more.

Case CFL-2. Where three or more successive interchanges are located with an average spacing of 1½ mi (2.4 km) or less and adjacent areas outside the right-of-way are substantially urban.

Case CFL-3. Where for a length of 2 mi (3.25 km) or more the freeway passes through a developed suburban or urban area in which at least one of these conditions exists: (1) local traffic operates on a complete street grid having some form of street lighting, parts of which are visible from the freeway; (2) the freeway passes through a series of developments that are lighted; (3) separate cross streets with or without connecting ramps occur with an average spacing of ½ mi (0.8 km) or less, some of which are lighted as part of the local street lighting system; (4) the freeway cross-section elements, such as median and borders, are substantially reduced in width.

Case CFL-4. Where the ratio of night accidents to day accidents is at least 2.0 or higher than the statewide average for all unlighted similar sections and lighting may be expected to result in a significant reduction in the night accidents [3].

7.16.2 Warranting Conditions for Complete Interchange Lighting

Complete lighting of freeway interchanges is warranted under the following circumstances:

Case CIL-1. Where total current ADT ramp traffic entering and leaving the freeway within the interchange area exceeds 10,000 for urban conditions, 8000 for suburban conditions, or 5000 for rural conditions.

Case CIL-2. Where current ADT on the crossroad exceeds 10,000 for urban conditions, 8000 for suburban conditions, or 5000 for rural conditions.

Case CIL-3. Where existing substantial commercial or industrial development, which is lighted, is located in the immediate vicinity of the interchange; or where the crossroad approaches are lighted for at least ½ mi (0.8 km) on each side of the interchange.

Case CIL-4. Where the ratio of night accidents to day accidents within the interchange area is at least 1.5 times higher than the statewide average for all unlighted similar interchanges and lighting may be expected to result in a significant reduction in the night accident rate.

www.EngineeringEBooksPdf.com

7.16.3 Warranting Conditions for Partial Interchange Lighting

Partial lighting of freeway interchanges (Fig. 7.58) is warranted when the following circumstances exist:

Case PIL-1. Where the total current ADT ramp traffic entering and leaving the freeway within the interchange area exceeds 5000 for urban conditions, 3000 for suburban conditions, or 1000 for rural conditions.

Case PIL-2. Where the current ADT on the freeway through traffic lanes exceeds 25,000 for urban conditions, 20,000 for suburban conditions, or 10,000 for rural conditions.

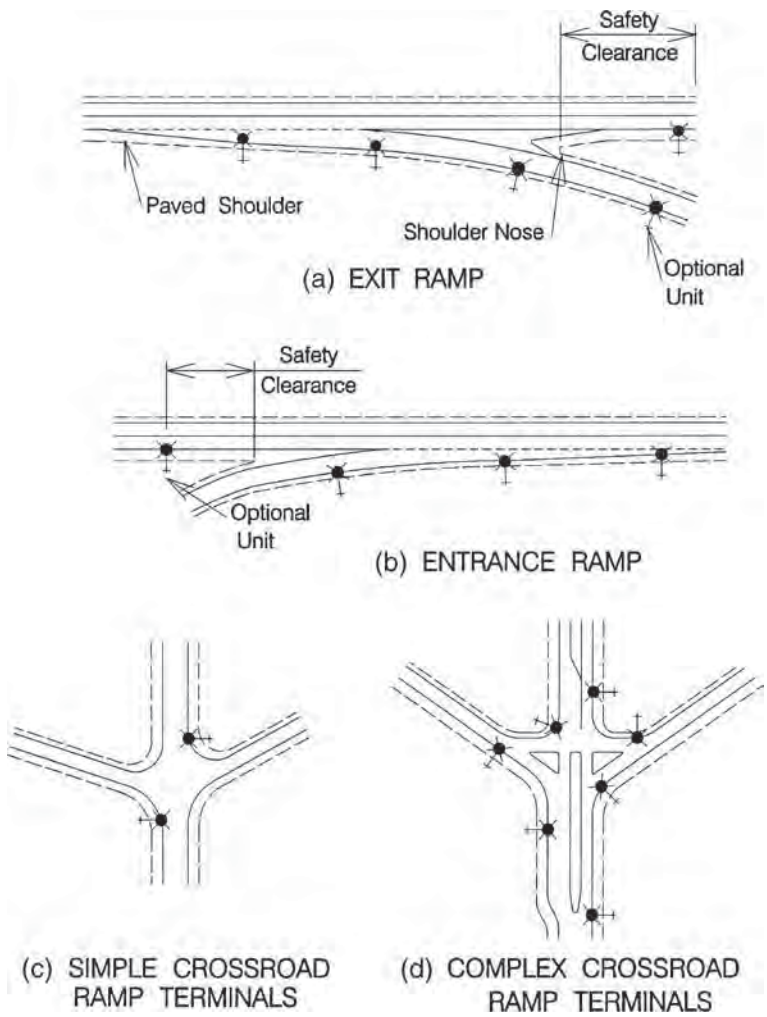

FIGURE 7.58 Typical luminaire locations for partial interchange lighting.

www.EngineeringEBooksPdf.com

Case PIL-3. Where the ratio of night accidents to day accidents within the interchange area is at least 1.25 times higher than the statewide average for all unlighted similar sections and lighting may be expected to result in a significant reduction in the night accident rate.

7.16.4 Special Conditions That Warrant Lighting [3]

Continuous, complete, or partial interchange lighting is considered to be justified in the following situations:

- In general, lighting is warranted where the local government agency finds sufficient benefit in the forms of convenience, safety, policing, community promotion, public relations, etc., to pay an appreciable percentage of the cost of the installation, maintenance, and operation of the lighting system.
- Where there is continuous freeway lighting, there should be complete interchange lighting.
- Where complete interchange lighting is warranted but not initially fully installed, a partial lighting system that exceeds the normal partial installation in number of lighting units is considered to be justified.
- Lighting of crossroad ramp terminals is warranted regardless of volumes where the design requires the use of channelizing or divisional islands, and/or where there is poor sight distance.

7.16.5 Freeway Lighting Design Values [7, 8]

The following should be satisfied for proper design when using the illuminance method:

- Continuous freeway and complete interchange lighting should be designed to provide an average maintained horizontal illuminance in the range of 0.6 to 0.9 fc (6 to 10 lx) on the traveled roadway.
- The ramps should be lighted to the same level as the main roadway.
- The point of least illuminance on the roadway should not be less than 0.2 horizontal fc (2 lx).
- An average to minimum uniformity ratio of 3:1 or 4:1 is reasonable. The more uniform design is preferred.
- The higher levels of illuminance should be at the gores and intersections.
- Situations such as high ambient brightness near the roadway or closed circuit television surveillance equipment may justify higher levels of illuminance.

The following criteria should be satisfied for proper design when using the luminance method:

- The average maintained luminance should be in the range of 0.4 to 1.0 cd/m^2 (0.12 to 0.29 foot-lambert, or ft·L).
- The ratio of average luminance to minimum luminance should not exceed 3.5 to 1.
- The ratio of maximum luminance to minimum luminance should not exceed 6.0 to 1.
- The ratio of veiling luminance to average luminance should not exceed 0.3 to 1.

www.EngineeringEBooksPdf.com

7.16.6 Transition Lighting

Rapid changes in lighting levels which occur, especially when leaving a continuously lighted section of roadway, may be compensated for by using transition lighting or adaptation techniques. Lighting levels as recommended above should be reduced to approximately one-half the recommended level for about 15 s to allow the eye to adapt.

7.16.7 Bridges and Overpasses

Lighting on bridges and overpasses should be at the same level as the roadway. It may be desirable to provide lighting on long bridges in urban and suburban areas even though the approaches are not lighted, since lighting enhances both the safety and utility of bridges. Where bridges are provided with sidewalks, lighting is warranted to increase pedestrian safety and security.

7.17 STREETS AND HIGHWAYS OTHER THAN FREEWAYS

Fixed roadway lighting systems increase night visibility, as well as improve safety, traffic movement, and general roadway use. Traffic volume, numbers of pedestrians, at-grade intersections, turning movements, signalization, and unusual geometrics are some elements that make lighting of streets and highways desirable. Lighting, in addition to its safety benefits, is a crime deterrent and a valuable aid to law enforcement agencies and often contributes to the pride of a community.

7.17.1 Warranting Conditions for Roadways Other Than Freeways [3]

It is not practical to establish specific warrants for the installation of roadway lighting to satisfy all prevailing or anticipated conditions. In general, lighting may be considered for those locations where the respective governmental agencies concur that lighting contributes substantially to the efficiency, safety, and comfort of vehicular or pedestrian traffic. Lighting may be provided for all major arterials in urbanized areas. It may also be provided for locations or sections of streets and highways where the ratio of night accidents to day accidents is higher than the statewide average for similar locations and a study indicates that lighting may be expected to significantly reduce the night accident rate. Determinations to install lighting that have been made on the basis of accident experience at a particular site can be applied to other similar highway locations. The latter should include similar geometric layouts on which experience or accident data are not available and also on highway sections where anticipated increase in vehicular and pedestrian traffic will present problems within a few years. Lighting may be considered at locations where severe or unusual weather or atmospheric conditions exist. In other situations, lighting may be considered where the local governmental agency finds sufficient benefit in the form of convenience, safety, policing, community promotion, or public relations to pay an appreciable percentage of the cost of, or wholly finance, the installation, maintenance, and operation of the lighting facilities [3].

Lighting has been successfully used on rural conventional highways at hazardous locations to reduce the number of accidents. Lighting of spot locations in rural areas

www.EngineeringEBooksPdf.com

should be considered whenever the driver is required to pass through a section of road with complex geometry and/or raised channelization as well as at intersections with higher than normal accident rates [3]. Isolated lighting of railroad grade crossings has been used to help the driver identify when a train is present in the crossing.

As with any roadway or intersection, warranting conditions should also be applied at a roundabout to determine the need for lighting. If lighting is warranted, the roundabout should be lit to a level that is 1.3 to 2 times the values used on the best lit approach and the uniformity should be 3:1 or better. The lighting should be extended a minimum of 400 ft (122 m) along each road connecting to the roundabout. Providing lighting that will provide good pedestrian recognition is an important issue. Placement of light poles 10 to 30 ft (3 to 9 m) before the crosswalk is recommended as a means of accomplishing this task [7].

7.17.2 Lighting Design Values

Recommended values for illuminance, luminance, and small-target visibility are published as Tables 2, 3, and 4 in ANSI/IESNA RP-8-00, *American National Standard Practice for Roadway Lighting,* www.iesna.org. These lighting criteria for the three recognized calculation methods are typically adopted by AASHTO and published as a part of the *AASHTO Guideline for Roadway Lighting*. The Federal Highway Administration, in turn, historically has accepted the RP-8 criteria as adopted by AASHTO for lighting projects partially funded with federal funds. Refer to the latest edition of the AASHTO *Roadway Lighting Design Guide* for current recommended criteria. Each lighting designer should have access to the latest versions of these documents, which sometimes contain substantial modifications.

7.17.3 Other Considerations

In using the AASHTO tables, there may be conditions for which different luminance and illuminance levels are desirable or necessary. The lighting designer should use all available pertinent information in reaching a decision regarding the level to be used for any specific street or highway.

There are many locations where very high levels of luminance or illuminance are provided for streets in the central city business district. This is usually a commercial consideration directed toward making the downtown business area more appealing to shoppers. Levels considerably higher than the levels in the table must be justified on some basis other than solely for the safe and efficient flow of traffic. If higher than recommended levels are desired, the lighting designer should consider using a white light source, such as metal halide, rather than a monochromatic source, such as high-pressure sodium (HPS). Visibility tests have shown there is a lack of contrast with high levels of HPS. The lack of contrast reduces the ability to distinguish an object from its background, the details of an object, or the color of the object.

7.18 TUNNEL LIGHTING

A tunnel is defined as a structure over a roadway that restricts the normal daytime illumination of a roadway section so that the driver's visibility is substantially diminished. Design of tunnel lighting requires adaptation for driver needs in the approach, and the

www.EngineeringEBooksPdf.com

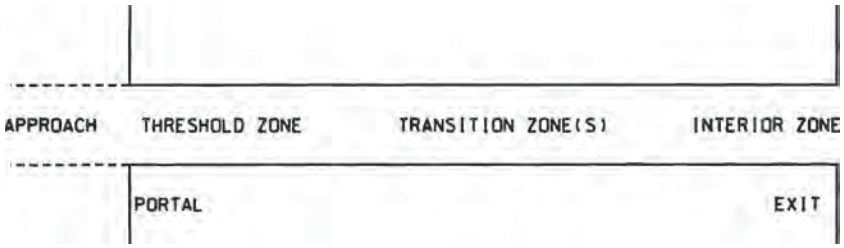

FIGURE 7.59 Lighting adaptation zones for tunnel lighting. Approach: The external roadway area leading to the tunnel. Portal: The plane of entrance into the tunnel. Threshold zone: The area inside the tunnel where a transition is made from the high natural lighting level to the beginning of the transition zone. Transition zone(s): Areas that allow the motorist to achieve appropriate eye adaptation by incrementally reducing the level of luminance required in the threshold zone to the luminance of the interior zone. Interior zone: Area within the tunnel after eye adaptation has been completed.

threshold, transition, and interior zones, as presented in Fig. 7.59. Tunnels are classified by structure length and geometric alignment (visibility through the structure). A straight tunnel having an overall length from portal to portal equal to or less than the safe stopping sight distance (SSSD; Table 7.18) is considered to be a short tunnel. A tunnel with an overall length greater than one SSSD, or having an alignment or curvature that prevents motorists from seeing through the structure to the exit end, is considered to be a long tunnel. Overpasses and underpasses are those structures in which the length does not exceed one width of the roadway over (or under) which they are constructed.

Underpasses with a length-to-height ratio of approximately 10:1 or less will not normally require daytime lighting. When the length-to-height ratio exceeds 10:1, it is necessary to analyze the specific conditions, including vehicular and pedestrian activity, to determine the need for daytime lighting. Roadways that are not continuously lighted warrant underpass lighting in areas having frequent nighttime pedestrian traffic or where

TABLE 7.18 Safe Stopping Sight Distances

Traffic speed		Minimum safe stopping sight distance (SSSD)*	
km/h	mi/h	m	ft
50	30	65	200
60	40	85	250
80	50	130	360
90	55	160	425
100	60	185	495
110	65	220	570

*Assumes average prevailing speeds in a straight and level tunnel approach roadway are at, or near, the posted speed limit of the facility. For other geometric conditions, refer to the AASHTO documents.

Source: *A Policy on Geometric Design of Highways and Streets,* American Association of State Highway and Transportation Officials, Washington, D.C., 2004, with permission.

www.EngineeringEBooksPdf.com

unusual or critical roadway geometry occurs under or adjacent to the underpass area. On roadways with continuous lighting, favorable positioning of luminaires adjacent to the underpass can often provide adequate lighting without supplemental luminaires. Lighting levels and uniformities should match the values on the adjacent roadway when practical. Because of limited mounting height, when lights are placed within a tunnel, special consideration should be given to glare and uniformity. Raised lighting levels may be achieved by using closely spaced low-wattage luminaires. Such increased levels should not exceed twice that of the adjacent roadway.

7.18.1 Warrants for Tunnel Lighting

The use of artificial daytime lighting is warranted when user visibility requirements are not satisfied by the natural sunlight. Overall tunnel visibility varies considerably with such factors as geometry of the tunnel and its approaches, traffic characteristics, roadway and environmental reflective surfaces, the climate and orientation of the tunnel, and visibility objectives. Comprehensive literature is available on the technical aspects of visibility and lighting of tunnels [9]. Information on lighting levels for tunnels requires a detailed analysis of the tunnel approach characteristics. Tunnel lighting requires considerable experience to achieve proper design.

7.19 ROADWAY REST AREAS

The design of lighting for rest areas requires consideration of both vehicle and pedestrian needs. Properly designed rest area lighting will enhance the architectural and landscape features of the facility, promote safety by easing the task of policing, and contribute to the rest and relaxation of motorists by adequately lighting the driving, parking, and walking areas. In areas with landscaping or in natural settings, the lighting designer often attempts to make the light poles less noticeable by causing them to blend with the environment. One cost-effective method uses colored fiberglass reinforced poles that blend with the surrounding environment. These poles are usually of the direct burial type that can be installed with or without breakaway devices.

The lighting system designer should be mindful of motorists on the travelway by not allowing glare or spill light from the rest area luminaires to adversely affect their vision. The motorist on the main roadway should be able to see any vehicles leaving the rest area as well as traffic along the main route. The lighting concerns for rest areas can be divided into several distinct areas:

- *Entrance and exit.* The deceleration and acceleration lanes adjacent to the main roadway can be lighted so that a motorist can safely transition into and out of the rest area. When the main roadway is not lighted, an average illumination of 0.6 fc (6 lx) should be maintained on the deceleration with three to five luminaires along the speed change lanes. On the exit gore and acceleration lane, 0.6 fc (6 lx) is recommended to a point where the motorist can merge onto the main roadway. If the main route is lighted, the entrance and exit lanes should be lighted to a level equal to that of the main route.
- *Interior roadways.* These are the roads for the entrance gore to the parking areas and from the parking areas to the exit gore. The recommended illumination is 0.6 fc (6 lx) with a uniformity of 3:1 to 4:1.

www.EngineeringEBooksPdf.com

- *Parking areas.* The recommended average maintained lighting level is 1.0 fc (11 lx) for both automobile and truck parking areas with a uniformity of 3:1 to 4:1 over the entire area. Special areas that should have the higher levels are handicap ramps, sanitary disposal stations, and other features that require detail viewing.
- *Activity areas.* The major pedestrian activity areas are restrooms, information centers, and walkways to and from the buildings and the parking lot. Minor activity areas include picnic tables, dog walks, and other walk areas. The recommended lighting level for major areas is 1.0 fc (11 lx) with a 3:1 to 4:1 uniformity ratio. Minor activity areas should be lighted to 0.5 fc (5 lx) with a uniformity ratio of 6:1 [3].

Rest areas are often located in remote areas that are not readily accessible by bucket trucks or other special maintenance equipment. This requires that lighting system components be selected that provide maximum protection against vandalism and require minimal maintenance. One device that has been used to allow pole-mounted luminaires to be maintained, and lamps changed, without using a bucket truck is an individual lowering device (ILD) which allows the pole-mounted luminaires to be lowered to ground level, one at a time, for servicing. This is done with a hand-operated winch that is lightweight and easily portable by one person. One such ILD (Fig. 7.60) that has been designed to DOT requirements and used successfully is manufactured by ITS Products Inc., Dothan, Ala.

FIGURE 7.60 Lowering device manufactured by ITS Products Inc.

www.EngineeringEBooksPdf.com

7.20 ANALYTICAL APPROACH TO LIGHTING WARRANTS [3]

An analytical approach to determining if roadway lighting is warranted was developed through the National Cooperative Highway Research Program (NCHRP Report 152) using four comprehensive evaluation forms. The four forms relate to non-controlled-access roadways, intersections, freeways, and interchanges, and are presented in Figs. 7.61, 7.62, 7.63, and 7.64, respectively [10]. The forms are used by multiplying the rating of a characteristic by the difference in its unlighted and lighted weight to obtain a quantitative measure of the effect of that characteristic on driver visual information needs. After all the characteristics are rated, the scores are summed to obtain an overall measure of driver information needs.

There is an established "minimum warranting condition" of a given number of points for each of the four forms. The exact number of points is determined by assuming a rating of 3 for each of the characteristics. It should be emphasized that the minimum warranting condition is not firm, but merely a starting point. This method is flexible and permits modifications to fit local needs. This procedure also provides a method for administrators or planners to prioritize lighting projects by using objective standards to determine where lighting would be most beneficial.

7.21 TYPES OF LUMINAIRES

Conventional roadway lighting has been the cobra head luminaire mounted on a support arm and positioned at the edge of the roadway or, in some cases, out over the roadway. The base of the pole when a breakaway device is present should be a minimum of 15 ft (4570 mm) from the travelway, but 20 ft (6100 mm) is preferred on roadway sections without a curb. The travelway is defined as being a continuous traffic lane and does not include an acceleration or deceleration lane merging with a through lane. When a curb is present, the pole with its breakaway device is preferred to be 10 ft (3050 mm) from the face of the curb. If this is not possible, the pole should be closer than 2 ft (610 mm). This will ensure that an impacting vehicle strikes the pole at the designed impact height for proper breakaway operation. Breakaway devices should not be used on any pole located where pedestrians are likely to be present, because of the danger to them if the pole falls.

Cobra head luminaires are available in a wide range of full cutoff, semicutoff, and noncutoff beam patterns. All cobra head luminaires have a horizontal lamp position that causes them to produce a large amount of light directly under the luminaire. This requires the designer to closely inspect the calculated average to minimum light level ratios to ensure compliance with values given in the illuminance tables.

Other luminaires that can be used in the same locations as cobra heads utilize a vertical lamp position. These produce a more uniform light pattern, since a smaller portion of their lumens are directed straight down, thus providing a more uniform light level. These luminaires are not available in cutoff types. The two major manufacturers of this vertical lamp luminaire are Holophane and McGraw-Edison.

High mast luminaires are designed to be mounted on the lowering ring of a high mast pole. High mast luminaires are produced primarily in 400- and 1000-W sizes in a wide variety of beam patterns. New lamps are being developed that have lumen to watt ratios equal to or better than the 1000-W that do not demonstrate the same fragile tendencies [11]. Manufacturers use different designations for their own luminaires, but generally type 2 and type 5 beam patterns are most popular. The beam patterns are also referred to as *long* and *narrow,* and *symmetrical* and *nonsymmetrical.* Cutoff and

www.EngineeringEBooksPdf.com

CLASSIFICATION FACTOR	RATING 1	2	3	4	5	UNLIT WEIGHT (A)	LIGHTED WEIGHT (B)	DIFF. (A-B)	SCORE [RATING X (A-B)]
GEOMETRIC FACTORS									
No. of Lanes	4 or less	-	-	-	8 or more	1.0	0.8	0.2	
Lane Width (m)	> 3.6	3.6	3.3	3.0	<3.0	3.0	2.5	0.5	
Median Openings per Mile	<4.0 or one-way operation	4.0-8.0	8.1-12.0	12.0-15.0	>15.0 or no access control	5.0	3.0	2.0	
Curb Cuts	< 10%	10-20%	20-30%	30-40%	>40%	5.0	3.0	2.0	
Curves	<3.0°	3.1-6.0°	6.1-8.0°	8.1-10.0°	>10°	13.0	5.0	8.0	
Grades	< 3%	3.0-3.9%	4.0-4.9%	5.0-6.9%	7% or more	3.2	2.8	0.4	
Sight Distances (m)	>215	150-215	90-150	60-90	<60	2.0	1.8	0.2	
Parking	Prohibited both sides	Loading zones only	Off-peak only	Permitted one side	Permitted both sides	0.2	0.1	0.1	
OPERATIONAL FACTORS							GEOMETRIC TOTAL		
Signals	All major intersections signalized	Substantial majority of intersections signalized	Most major intersections signalized	About half the intersections signalized	Frequent nonsignalized intersections	3.0	2.8	0.2	
Left Turn Lane	All major intersections or one-way operation	Substantial majority of intersections	Most major intersections	About half the major intersections	Infrequent turn bays or undivided streets	5.0	4.0	1.0	
Median Width (m)	9	6-9	3-6	0-1.2	0-1.2	1.0	0.5	0.5	
Operating Speed (km/h)	40 or less	50	55	65	70 or greater	1.0	0.2	0.8	
Pedestrian Traffic at Night (peds/mi)	Very few or none	0-50	50-100	100-200	> 200	1.5	0.5	1.0	
ENVIRONMENTAL FACTORS							OPERATIONAL TOTAL		
% Development	0	0-30%	30-60%	60-90%	100%	0.5	0.3	0.2	
Predominant Type development	Undeveloped or backup design	Residential	Half residential &/ or commercial	Industrial or commercial	Strip industrial or commercial	0.5	0.3	0.2	
Setback Distance (m)	> 60	45-60	30-45	15-30	< 15	0.5	0.3	0.2	
Advertising or Area Lighting	None	0-40%	40-60%	60-80%	Essentially continuous	3.0	1.0	2.0	
Raised-Curb Median	None	Continuous	At all intersections	At all signalized intersections	A few locations	1.0	0.5	0.5	
Crime Rate	Extremely low	Lower than city average	City average	Higher than city average	Extremely high	1.0	0.5	0.5	
ACCIDENTS							ENVIRONMENTAL TOTAL		
Ratio of Night-to-Day Accident Rates	< 1.0	1.0-1.2	1.2-1.5	1.5-2.0	2.0*	10.0	2.0	8.0	
*Continuous Lighting Warranted		GEOMETRIC TOTAL =					ACCIDENT TOTAL		
		OPERATIONAL TOTAL =							
		ENVIRONMENTAL TOTAL =							
		ACCIDENT TOTAL =							
		SUM =				POINTS			
		WARRANTING CONDITION = 85 POINTS							

FIGURE 7.61 Evaluation form for non-controlled-access facility lighting.

noncutoff types are used, although not all beam patterns are made in each category. The designer must be concerned with light trespass when using high mast luminaires and should locate them so as not to interfere with adjacent property usage. A technique used by some designers, when high mast poles cannot be located in the middle of the area to be lighted, is to specify an offset-type luminaire mounted on the high

www.EngineeringEBooksPdf.com

CLASSIFICATION FACTOR	RATING 1	2	3	4	5	UNLIT WEIGHT (A)	LIGHTED WEIGHT (B)	DIFF. (A-B)	SCORE [RATING X (A-B)]
GEOMETRIC FACTORS									
Number of Legs		3	4	5	6 or more (including traffic circles)	3.0	2.5	0.5	
Approach Lane Width (m)	>3.6	3.6	3.3	3.0	<3.0	3.0	2.5	0.5	
Channelization	No turn lanes	Left turn lanes on major legs	Left turn lanes on all legs, right turn lanes on major legs	Left and right turn lanes on major legs	Left and right turn lanes on all legs	2.0	1.0	1.0	
Approach Sight Distance (m)	>215	150-215	90-150	60-90	<60	2.0	1.8	0.2	
Grades on Approach Streets	< 3%	3.0-3.9%	4.0-4.9%	5.0-6.9%	7% or more	3.2	2.8	0.4	
Curvature on Approach Legs	< 3.0°	3.0°-6.0°	6.1°-8.0°	8.1°-10.0°	> 10°	13.0	5.0	8.0	
Parking in Facility	Prohibited both sides	Loading zones only	Off-peak only	Permitted one side only	Permitted both sides	0.2	0.1	0.1	
OPERATIONAL FACTORS							GEOMETRIC TOTAL		
Operating Speed on Approach Legs (km/h)	40 or less	50	55	65	70	1.0	0.2	0.8	
Type of Control	All phases signalized (incl. turn lane)	Left turn lane signal control	Through-traffic signal control only	4-way stop control	Stop control on minor legs or no control	3.0	2.7	0.3	
Channelization	Left and right turn lane signal control	Left and right turn lane signal control on major legs	Left turn lane signal control on all legs	Left turn lane signal control on major legs	No turn lane control	3.0	2.0	1.0	
Level of Service (Load Factor)	A 0.0	B 0-0.1	C 0.1-0.3	D 0.3-0.7	E 0.7-1.0	1.0	0.2	0.8	
Pedestrian Volume (peds/h)	Very few or none	0-50	50-100	100-200	> 200	1.5	0.5	1.0	
ENVIRONMENTAL FACTORS							OPERATIONAL TOTAL		
Percent Adjacent Development	0	0-30%	30-60%	60-90%	100%	0.5	0.3	0.2	
Predominant Development near Intersection	Undeveloped	Residential	50% residential 50% industrial or commercial	Industrial or commercial	Strip industrial or commercial	0.5	0.3	0.2	
Lighting in Immediate Vicinity	None	0-40%	40-60%	60-90%	100%	3.0	1.5	1.5	
Crime Rate	Extremely low	Lower than City average	city average	Higher than city average	Extremely high	1.0	0.5	0.5	
ACCIDENTS							ENVIROMENTAL TOTAL		
Ratio of Night-to-Day Accident Rates	1.0	1.0-1.2	1.2-1.5	1.5-2.0	2.0*	10.0	2.0	8.0	
*Intersection Lighting Warranted		GEOMETRIC TOTAL =					ACCIDENT TOTAL		
		OPERATIONAL TOTAL =							
		ENVIRONMENTAL TOTAL =							
		ACCIDENT TOTAL =							
		SUM =				POINTS			
		WARRANTING CONDITION = 75 POINTS							

FIGURE 7.62 Evaluation form for intersection lighting.

www.EngineeringEBooksPdf.com

CLASSIFICATION FACTOR	RATING 1	2	3	4	5	UNLIT WEIGHT (A)	LIGHTED WEIGHT (B)	DIFF. (A-B)	SCORE [RATING X (A-B)]
GEOMETRIC FACTORS									
Number of Lanes	4		6		≥ 8	1.0	0.8	0.2	
Lane Width (m)	>3.6	3.6	3.3	3.0	≤2.75	3.0	2.5	0.5	
Median Width (m)	>12	7-12	3.7-7.0	1.2-3.3	0	1.0	0.5	0.5	
Shoulders (m)	3.0	2.4	1.8	0.9	0	1.0	0.5	0.5	
Slopes	≥ 8:1	6:1	4:1	3:1	2:1	1.0	0.5	0.5	
Curves	0-1/2°	1/2-1°	1-2°	2-3°	3-4°	13.0	5.0	8.0	
Grades	< 3%	3-3.9%	4-4.9%	5-6.9%	> 7%	3.2	2.8	0.4	
Interchange Frequency	6.4 km	4.8 km	3.2 km	1.6 km	>1.6 km	4.0	1.0	3.0	
OPERATIONAL FACTORS							GEOMETRIC TOTAL		
Level of Service (any dark hour)	A	B	C	D	E	6.0	1.0	5.0	
ENVIRONMENTAL FACTORS							OPERATIONAL TOTAL		
% development	0%	25%	50%	75%	100%	3.5	0.5	3.0	
Offset to Development (m)	60	45	30	15	<15	3.5	0.5	3.0	
ACCIDENTS							ENVIRONMENTAL TOTAL		
Ratio of Night-to-Day Accident Rates	1.0	1.0-1.2	1.2-1.5	1.5-2.0	2.0+	10.0	2.0	8.0	
*Continuous Lighting Warranted		GEOMETRIC TOTAL =					ACCIDENT TOTAL		
		OPERATIONAL TOTAL =							
		ENVIRONMENTAL TOTAL =							
		ACCIDENT TOTAL =							
		SUM =				POINTS			
		WARRANTING CONDITION = 95 POINTS							

FIGURE 7.63 Evaluation form for controlled-access facility freeway lighting.

www.EngineeringEBooksPdf.com

CLASSIFICATION FACTOR	RATING 1	2	3	4	5	UNLIT WEIGHT (A)	LIGHTED WEIGHT (B)	DIFF. (A-B)	SCORE [RATING X (A-B)]
GEOMETRIC FACTORS									
Ramp Types	Direct	Diamond	Buttonhooks cloverleafs	Trumpet	Scissor and left-side	2.0	1.0	1.0	
Crossroad Classification	None		Continuous		At interchange intersections	2.0	1.0	1.0	
Frontage Roads	None		One-way		Two-way	1.5	1.0	0.5	
Freeway Lane Widths (m)	>3.6	3.6	3.3	3.0	<3.0	3.0	2.5	0.5	
Freeway Median Widths (m)	>12	10-12	3.6-7.3	1.2-3.6	<1.2	1.0	0.5	0.5	
Number of Freeway Lanes	4 or less		6		8 or more	1.0	0.8	0.2	
Main Lane Curves	< 1/2°	1-2°	2-3°	3-4°	> 4°	13.0	5.0	8.0	
Grades	3%	3-3.9%	4-4.9%	5-6.9%	7% or more	3.2	2.8	0.4	
Sight Distance Crossroad Intersection	>304	210-300	150-210	120-150	<120	2.0	1.8	0.2	
OPERATIONAL FACTORS							GEOMETRIC TOTAL		
Level of Service (any dark hour)	A	B	C	D	E	6.0	1.0	5.0	
ENVIRONMENTAL FACTORS							OPERATIONAL TOTAL		
% development	None	1 quad	2 quad	3 quad	4 quad	2.0	0.5	1.5	
Setback Distance (m)	>60	45-60	30-45	15-30	<15	0.5	0.3	0.2	
Crossroad Approach Lighting	None		Partial		Complete	3.0	2.0	1.0	
Freeway Lighting	None		Interchanges only		Continuous	5.0	3.0	2.0	
ACCIDENTS							ENVIRONMENTAL TOTAL		
Ratio of Night-to-Day Accident Rates	< 1.0	1.0-1.2	1.2-1.5	1.5-2.0	> 2.0*	10.0	2.0	8.0	
		GEOMETRIC TOTAL =							
		OPERATIONAL TOTAL =							
		ENVIRONMENTAL TOTAL =							
		ACCIDENT TOTAL =							
		SUM = POINTS					ACCIDENT TOTAL		
*Continuous Lighting Warranted		COMPLETE LIGHTING WARRANTING CONDITION = 90 POINTS							
		PARTIAL LIGHTING WARRANTING CONDITION = 60 POINTS							

FIGURE 7.64 Evaluation form for interchange lighting.

www.EngineeringEBooksPdf.com

mast lowering ring in lieu of the "traditional" high mast luminaire. This produces a more directional pattern that can reduce the amount of off-premise light.

In addition to the cutoff type fixture, some manufacturers have coined the term "Dark Skies" for fixtures that have a photometric design that not only limits the horizontal beam spread, but also limits or completely eliminates any component of uplight from the fixture. Property owners are very concerned about light trespass where commercial developments are in close proximity to residential areas. Unwanted light can affect the value of a parcel of property for certain types of usage.

The use of light emitting diodes (LED's) has created a new type of light fixture. These units are still in the early stages of development but a limited number of manufacturers do market exterior fixtures using this new technology. The installation costs of LED fixtures are comparable to conventional fixtures but the initial cost of the fixtures exceeds that of conventional high pressure sodium or metal halide fixtures. However, energy costs using the LED fixtures are much lower than conventional fixtures. The photometrics of LED fixtures can be controlled to prevent both uplight and trespass on adjacent areas. As the production costs decrease and different styles become available, the use of this type of fixture will likely increase.

Avoiding light trespass is very important near airport runways. Glare from improperly placed fixtures or the use of fixtures with uplight components can be a distraction to pilots on final approach. The area around an airport also has height restrictions due to FAA requirements. The lighting designer must be diligent in researching these requirements and using lighting standards that do not exceed the limits. One method is to use offset fixtures at lower mounting heights to comply with height limitations. Most manufacturers also provide shields that prevent overspill of the light output. The use of fixtures referenced above as "Dark Skies" will also aid in meeting the design requirements for a particular location or area.

Offset luminaires are manufactured by several companies under names such as Vector, Turnpike, Multimount, and Interstate. These luminaires are specifically designed for roadway use and resemble a floodlight in appearance but not in beam pattern. The offset luminaires are intended to be mounted well away from the roadway edge and aimed at an approximate 45° angle. This design was originally conceived in the 1960s, and a test installation along I-55 south of Memphis was very satisfactory. The original design was large and difficult to handle, but perhaps the greatest handicap that prevented widespread use was the resistance among maintenance personnel due to the difficulty in getting to the pole location when servicing was required. From a safety aspect, the offset was, and still is, a very good choice, since it can be located well away from the travelway and the beam pattern allows a wide spacing between the poles. The development of an individual lowering device has increased the number of locations where the offset can be installed. The individual lowering device (ILD) provides each luminaire with its own lowering cable and latch assembly, as distinguished from the high mast lowering device, which has all luminaires mounted on the same ring and lowered together. The cost of the ILD is much less than that of the high mast device when one to eight luminaires are located on the pole. Four ILDs are the maximum number used on a single pole, but one or two per pole is most commonly used.

Segmented reflectors are special-purpose luminaires that have been successfully used on top of concrete median barriers. The top of concrete safety shape barriers can be as wide as 12 in (300 mm). This limits the anchor bolt spacing, for attaching a luminaire pole, at 6 in (150 mm) in order to provide a minimum of 3 in (75 mm) of concrete around each bolt. The resultant anchor bolt spacing places a height restriction on the pole due to the structural needs required to counteract the overturn moments. Two options are to increase the width of the concrete barrier at the luminaire post, as in Fig. 7.65, or to use segmented reflector luminaires, which require less height to provide proper lighting for multiple lanes.

www.EngineeringEBooksPdf.com

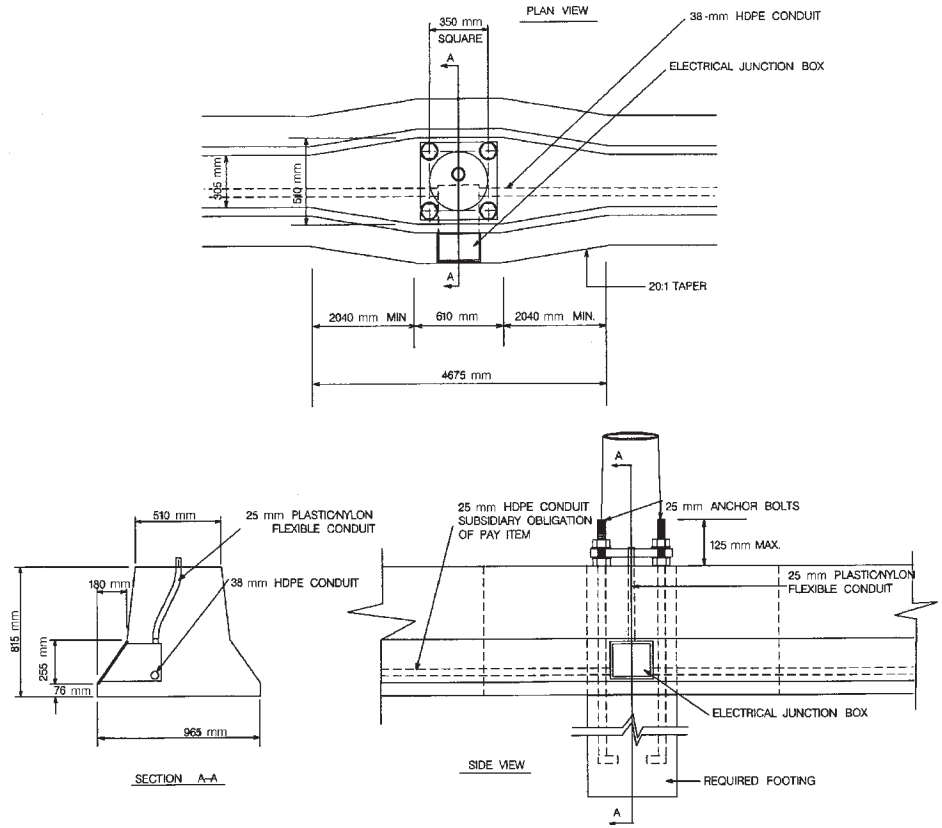

FIGURE 7.65 Example of widening concrete median safety shape to accommodate luminaire pole. Conversions: 25 mm = 1 in, 38 mm = 1.5 in, 76 mm = 3 in, 125 mm = 5 in, 180 mm = 7 in, 255 mm = 10 in, 305 mm = 12 in, 350 mm = 13¾ in, 510 mm = 20 in, 610 mm = 24 in, 815 mm = 32 in, 965 mm = 38 in, 2040 mm = 80 in, 4675 mm = 184 in.

www.EngineeringEBooksPdf.com

Two of the segmented reflector luminaires when mounted 40 ft (12 m) high can light up to six or eight lanes on each side of the barrier depending on the width of the inside shoulder. This luminaire was originally developed for use in parking decks and uses a vertically mounted lamp with only a small portion of its lumens directed straight down. Exceptional uniformity ratios and the cutoff pattern make these luminaires a good choice when veiling luminance (glare) and light trespass are concerns. Other types of luminaires are also used on top of median barriers. The cobra head is often used, and a traditional high mast luminaire has been found to be very effective in this application, although veiling luminance is a potential problem.

Poles mounted on top of median barriers have a number of advantages and disadvantages. One advantage is cost, since one pole in the middle of the lighted area can replace two roadside luminaires, requiring only one set of circuit conductors and conduits. The disadvantages include problems of traffic and maintenance safety. Placing the poles on top of the concrete median increases the probability of a pole being struck and landing in the opposing traffic lanes, when compared with offset luminaire pole locations. Maintenance crews are required to work with bucket trucks on the inside shoulder, requiring the closure of the inside traffic lane. Experience of over 10 years with median barrier–mounted poles indicates that few poles are actually struck and the majority of strikes that do occur take place late at night when traffic levels are low. The poles that were struck did not become detached from the anchor bolts, since breakaway devices are not used on the barrier rail poles. The use of bucket trucks to service these luminaires is a potential problem, because the knuckle of the boom can extend over an adjacent lane. The solution in at least one metropolitan area is to use the ILD (Fig. 7.60) with the luminaire, eliminating the need for a bucket truck. This facilitates traffic control and requires a smaller-size crew. Some maintenance departments prefer the ILDs and request their installation on barrier lighting projects.

There have been several types of floodlights and sports lights used in roadway applications over the years as lighting designers have attempted to cope with the increasing numbers of lanes and the confining rights-of-way. In most cases, the high level of accuracy required for proper aiming and the need for special glare shields have limited their usefulness.

7.22 HIGH MAST LIGHTING

The value of high mast lighting has been highly controversial since its introduction in the early 1960s. Proponents suggested that high mast lighting offered considerable enhancements to visibility. Opponents, on the other hand, argued that high mast lighting was expensive to build, offered little improvement to visibility, and often resulted in light trespass and light pollution. By the early 1980s, new data became available which suggested the superiority of high mast light over conventional systems. The reasons cited were

- An improved visual field negating the "tunnel effect" caused by a limited lateral dimension when using conventional mounting heights. The tunnel effect prevents the driver's eyes from reaching a reasonable level of retinal stability—a failure believed by some to be the cause of a substantial number of accidents at night [12].
- Improved luminance uniformity within the principal visual field. The uniformity eliminates the need for the eye to adapt to a wide range of luminances, which adversely affects visual acuity. Many experienced engineers are of the opinion that luminance can be reduced when using high mast lighting because of the compensating factors of improved uniformity and reduced veiling glare.

www.EngineeringEBooksPdf.com

- Disability veiling brightness negatively affects a driver's visual performance. In practice, luminaires spaced at long distances require large light sources with high beam intensity in the upper angles of the vertical plane. Light emitted from a luminaire above 75° can be considered a contributor to glare. High mast luminaires confine their distribution within the limits of 60° to 65° and practically eliminate the disability veiling brightness. Brightness from high mast systems is also reduced through geometric arrangement. Increased mounting height and greater offset remove the luminaires from the driver's active viewing area [12].
- The location of the high mast pole contributes to a clear roadside and results in a reduction in the number of vehicular collisions with fixed objects [12].
- Studies done using the older mercury vapor light sources indicated that on both diamond and cloverleaf type interchanges, high mast lighting systems utilized fewer luminaires and less energy than conventional lighting [12].
- There is a growing emphasis across the nation to eliminate or control "obtrusive light." Keeping this in mind, a designer might want to consider using some of the more newly designed, full-cutoff, high mast luminaires that have been found acceptable and to be aware of keeping the mounting heights as low as feasible for a given situation.

The growth in vehicular traffic combined with the continuous search by transportation authorities for safer and more cost-effective roadway design has resulted in a shift toward multilane roadways. The new freeway designs cannot be effectively illuminated by conventional methods using low mounting heights and light sources of limited lumen output. Because of these requirements, high mast systems offer a distinct advantage over alternative systems. High mast systems also offer advantages in cases where future road widening is expected. The poles can be located 50 ft (15 m) or more from the traffic lanes, enabling future road widening without the need for changes in the lighting system [12]. Figure 7.66 shows a typical lighting design.

7.23 ROADSIDE SAFETY

The primary purpose of roadway illumination is to increase safety by enhancing nighttime visibility. The net safety benefit from increased visibility is influenced by the hazard posed by the roadway lighting or luminaire support acting as a fixed object. If roadway illumination is not warranted, or if it is installed wrong, there is a strong possibility that traffic hazards will be increased rather than reduced by providing illumination. The AASHTO publication *Roadside Design Guide* requires the lighting designer not only to produce an effective, efficient lighting system but also to consider removing the hazards inherent in such a system [13]. The *Roadway Design Guide* stresses that safety should be enhanced by considering the following, in decreased order of desirability:

- Remove the hazard from the right-of-way
- Locate the hazard in a place less likely to be struck
- Provide a breakaway support
- Provide a barricade

The most common approach to meeting the safety requirement has been to provide a breakaway structure for the light poles. There are a number of devices that have been tested and approved by the Federal Highway Administration for this purpose, including

www.EngineeringEBooksPdf.com

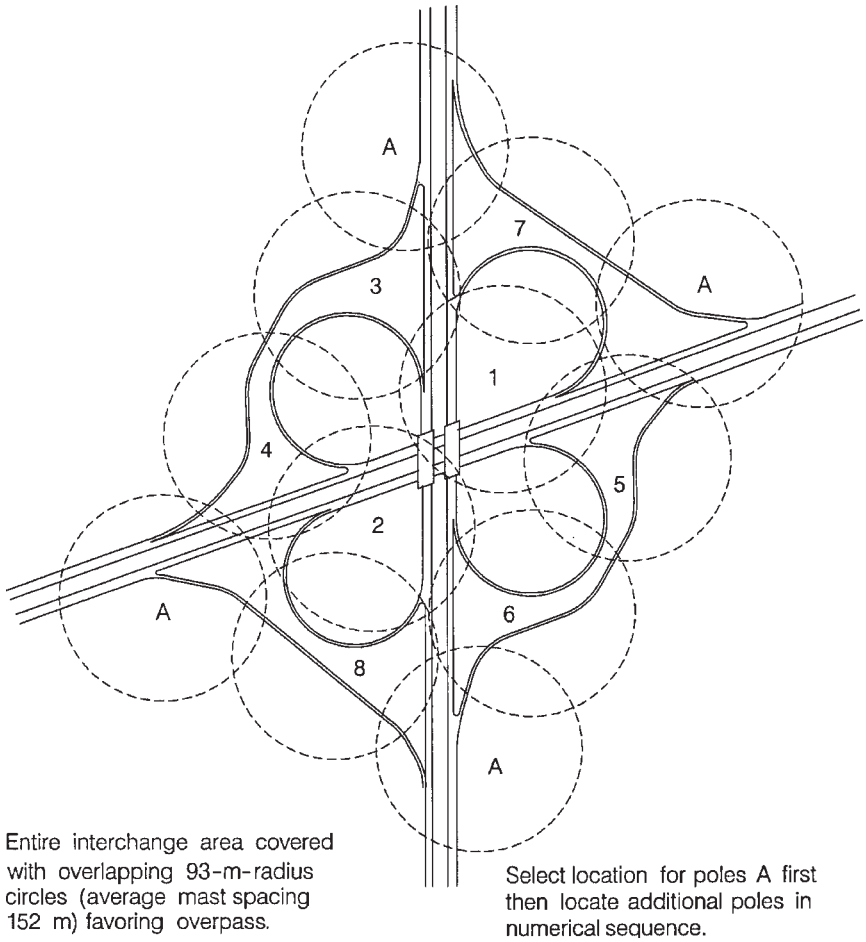

FIGURE 7.66 Highway lighting design at typical cloverleaf interchange. Conversions: 93 m = 300 ft, 152 m = 500 ft.

transformer bases, frangible couplings, slip bases, and various schemes applicable to a particular type of pole such as fiberglass and aluminum. All these devices will perform as prescribed, but it is up to the designer to use the proper device in the particular situation encountered for the project. The FHWA approval process evaluates only the structural breakaway performance of a tested device, not the structural strength or the possible electrical hazard introduced when a pole is struck. The lighting designer must become familiar with the structural load limitations of each tested device in order to match the weight, height, and wind loading demands of the luminaires with the strength of the device being considered. The designer should also consider methods to mitigate or eliminate the possibility that damaged electrical wires will be exposed after a pole is knocked down. In urban areas or other locations where pedestrians or cyclists may be in the area where a breakaway pole would fall if struck, breakaway supports are not recommended.

www.EngineeringEBooksPdf.com

7.23.1 Location of Poles

The location of a lighting pole is partially dictated by the lighting scheme selected by the designer for a section of roadway. Using the conventional (cobra head) type luminaires requires the pole to be close to the travelway and therefore, unless it is behind a barrier, most likely to be struck by an errant vehicle. A median barrier–mounted pole is less likely to be struck, but occasionally an out-of-control vehicle will get high enough on the barrier to impact the pole. When this occurs, the danger to oncoming traffic will be increased if the pole is of a breakaway design. Because of this possibility, median-mounted poles are normally not designed as a breakaway type. The lighting scheme that incorporates offset and/or high mast luminaires is the least likely to create a hazard on the roadside, since the poles can be located 40 to 50 ft (12 to 15 m), or farther, from the travelway. In addition to reduced accident rates, this type of lighting reduces maintenance costs due to pole knock-downs.

Pole locations are influenced by the location of sign structures, overpasses, guardrail, roadway curvature, gore clearances, overhead power lines, drainage pipes, drainage structures, underground utilities, and the shoulder slopes, in addition to the luminaire capabilities. The lighting designer must evaluate the eventual consequences of safety, aesthetics, maintenance, and economics when selecting the pole locations. Safety considerations for lighting pole locations include

- Poles should be placed outside the clear zone whenever practical.
- Pole locations should consider the hazards in servicing the lighting equipment.
- Poles should be located to provide adequate safety clearance in the gore areas of exit and entrance ramps.
- Poles should be placed to minimize interference with motorists' view of the sign, and the luminaire brightness should not seriously detract from sign legibility at night.
- Poles should not be placed where overhead signs will cast distracting shadows on the roadway surface at night.
- Poles on the inside radius of superelevated roadways should have sufficient clearance to avoid being struck by trucks.
- Poles should never be placed on the traffic side of guardrail or any natural or manufactured deflecting barrier.
- Where poles are located in exposed areas, they should have an approved breakaway feature or device.
- Poles along the freeway should be located at least 4.6 m and preferably 6.1 m or more from the edge of the travelway and include a breakaway device unless located behind a barrier or guiderail or otherwise protected.
- Poles behind flexible or yielding type rails or barriers should provide the necessary clear distance for rail or barrier deflection. The design deflection distance of the particular barrier being used should be checked to ensure that vehicles impacting the barrier will not continue into the lighting support.
- Installing poles on the median, instead of the roadside, should be considered where median width is sufficient (on landscaped medians) and on top of properly designed concrete safety shapes present on narrow medians. Among the advantages with median-mounted poles are that one-half the number of poles are required, the quantities of conduit and cable are reduced, house sidelight is minimized, and visibility on the high-speed lanes is improved.

www.EngineeringEBooksPdf.com

Clear zone is not a constant distance but varies on the basis of the design ADT, the design speed, and the slope, either positive or negative, of the shoulder. Clear zone dimensions are given in the AASHTO *Roadside Design Guide* [13]. (See Chap. 6.)

7.24 POLE TYPES

Poles are available in a number of materials. The advantages and disadvantages of each follow.

Steel. Steel poles are available in galvanized, painted, powder-coated, and weathering types, plus a combination of powder coating over galvanizing. Galvanized is the most popular of the steel types because of the comparatively low cost and extended life. Painted poles are used primarily when a color is desired, but they require continual maintenance. The powder coating over galvanizing serves the same purpose and requires little maintenance. Weathering steel poles offer enhanced aesthetics but provisions must be made for the rusty runoff.

Aluminum. Aluminum poles are popular because of their resistance to corrosion and the resultant low maintenance cost. They have an added advantage of being lighter in weight than most other types. Aluminum poles operate well as breakaway designs when impacted at the design height. Since they are less rigid than steel posts, however, aluminum poles can result in an increased probability of improper breakaway operation when impacted higher than the design height. Aluminum poles are also considerably more expensive than most other types.

Stainless Steel. Stainless steel poles are corrosion-resistant and relatively lightweight. Their high rigidity results in dependable breakaway operation upon impact. They are, however, considerably more expensive than the other pole types.

Fiberglass. Fiberglass-reinforced plastic (FRP) poles are approved for breakaway use both in the anchor base and in the direct burial series. Shaft lengths are currently limited to 47 ft (14.3 m), which means 39 ft (12 m) height for the direct burial series and the full 47 ft (14.3 m) height for the anchor base series. Advantages of FRP poles include no rust, no corrosion, no rot, lightweight, no additional breakaway device required, no maintenance, no electrical shock, and, for the direct burial series, no need for concrete foundation. FRP poles come in many decorative styles and several standard colors.

Wood. Wood is perhaps the least expensive of pole types, particularly in areas where trees are plentiful. They can be treated to resist deterioration from the environment and damage due to insects. The use of existing utility poles for luminaire placement has the advantage of reducing the number of poles on the roadside. The huge mass of wood poles, however, makes it difficult to design them as breakaway, and thus, wooden poles should not be installed on high-speed facilities.

Concrete. Concrete poles are popular in regions where cement and concrete aggregates are plentiful. One advantage to concrete poles is that they can be economical. Concrete poles cannot, however, be designed effectively to safely break away upon impact. They are extremely heavy even when made by prestressing concrete. Impacts

www.EngineeringEBooksPdf.com

with concrete poles result in extensive damage to vehicles and severe injury to occupants. Prestressed concrete poles, therefore, should not be used within the traversable area, unless shielded, on facilities with design speeds over 30 mi/h (50 km/h). Concrete posts can be a functional and economical type of support on local urban streets if proper consideration is given to placement.

7.25 ELECTRICAL HAZARD

One problem that has recently been identified is the potential deadly threat posed by the electric circuits after pole impact by an errant vehicle. There are many documented deaths of motorists who survived the impact with a luminaire pole only to be subsequently killed from the resulting explosion and fire. The explosion and fire are usually caused when the fuel tank ruptures, the vehicle having been caught on an improperly constructed foundation, and the electrical system sparks repeatedly until the fuel explodes. In other incidences, medical personnel have been delayed from attending victims because of the risk of electrical shock from exposed conductors near or under a vehicle.

Past research efforts have concentrated on evaluating the structural breakaway characteristics of luminaire poles. In addition to the need for the pole itself to have breakaway ability, it is recognized that the underground wiring system should also be capable of properly separating. There are a number of reasons for requiring proper separation of the wiring system. One of these reasons is that the size, and associated tensile strength, of the wire cable is sufficient to significantly increase the deceleration rate of impacting vehicles and to also change the trajectory of the falling pole. Another reason is that improper separation of the electrical cabling can result in bare conductors that are still energized, posing an electrical and a possible fire hazard at the accident scene.

Early efforts to reduce electrical hazard concentrated on providing line fuses placed in a breakaway device. However, these widely used "breakaway fuse holders," which for years have been the standard, have not been certified by testing. Prior experience indicates that they frequently perform improperly during an accident situation. Rather than properly separating, the device frequently pulls off the wire, leaving an exposed end that is potentially deadly. Part of the problem with the breakaway fuse holder is the location of the device in the pole or T-base and the 24 to 36 in (610 to 910 mm) of distribution cable inside the base. This extra length of wire is placed in the pole to allow service crews the ability to pull the wire out of the pole and make the connections to the luminaires. Upon impact this extra length of wire obstructs proper separation of the breakaway fuse, and allows the wiring insulation to be damaged by the fractured pole. The resulting bare electrical conductor poses a safety hazard because of the relatively large voltages used in underground roadway illumination systems.

Most luminaire underground wiring systems operate on 480 V. The reason for using 480 V is that the voltage drop in the copper conductors that supply a given load is only one-fourth the value of the voltage drop when using 120 V and one-half that of 240 V. In addition, luminaires are designed to perform within a certain percent of the rated voltage. Thus for a given percent, such as 10 percent, the allowable drop would be 4 times greater for a 480-V circuit than for a 120-V circuit (48 versus 12 V) or twice that of a 240-V circuit. These factors are additive, so a 480-V circuit requires a much smaller copper wire to deliver the necessary amount of energy over a long distance. Using 480 V is desirable, but proper precautions and installation techniques must be used to reduce the inherent hazard on the public right-of-way.

www.EngineeringEBooksPdf.com

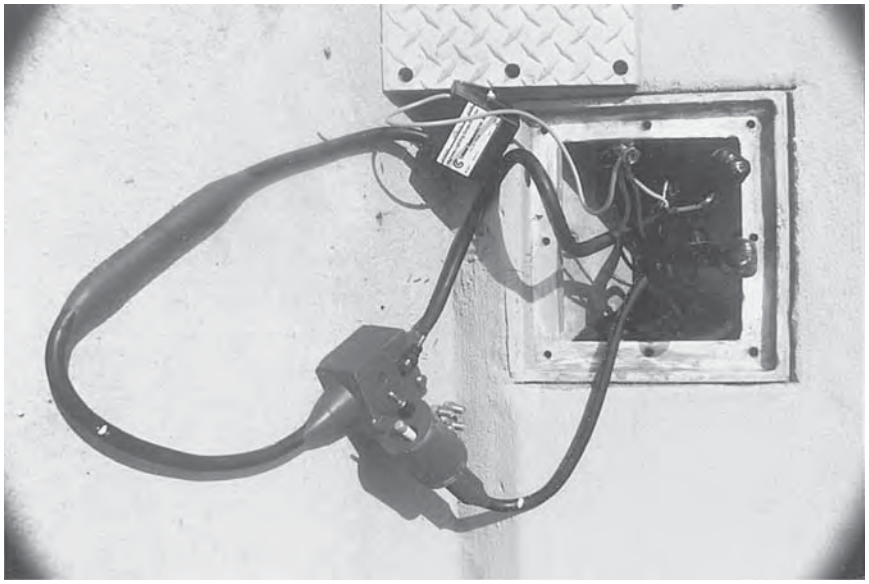

FIGURE 7.67 MG^2/Duraline modular pole cable system.

A modular cable system initially developed by MG^2 Inc. and Duraline Inc. eliminates a number of problems presented by the current wiring method [14]. This cable system is a submersible, modular plug and cable system that allows the circuit components (i.e., the low-amperage, fast-acting, current-limiting fuses; the surge arrester where desired; and the conductor splices) to be placed in an underground junction box adjacent to the pole foundation. The circuit breakaway connector can be positively positioned at the top edge of the conduit inside the pole base. Since the stiff, typically no. 4 or no. 6 copper, conducting cables never enter the pole, the system unplugs at ground level. The impact that knocks down the pole will not put stress on the electrical cables and will not weaken splices in adjacent poles. Most important, with the modular cable assembly, there is no exposed electrical hazard upon knockdown as can exist with the conventional wiring method. When this system (Fig. 7.67) is combined with a properly installed foundation, the possibility of fire and explosion or electrical shock is significantly reduced if not eliminated. Recent developments have shown that the splices, the surge arresters, the fuse holders, and the ground rod must be placed underground in a junction box adjacent to the pole base to provide the greatest possible degree of safety. This requires that all components be submersible. This design will positively place a breakaway connector in the wiring system at the top edge of the foundation; the fuses are underground, where no damage can occur on the supply side. The Modular Cable System developed by MG^2/Duraline was the first of these submersible wiring systems on the market and has proven to be very reliable [14]. By using fast-acting, current-limiting fuses installed below ground, the potential for electrical shock and fuel explosions is greatly reduced if not eliminated.

The AASHTO *Standard Specification for Structural Supports for Highway Signs, Luminaires, and Traffic Signals,* 4th ed. (2001) has included some positive statements strongly encouraging the use of this submersible-type wiring system for all breakaway poles.

www.EngineeringEBooksPdf.com

7.26 FOUNDATIONS

The foundation for a luminaire pole must provide sufficient resistance to overturning moments caused by the static load of the mast arm plus a wind and/or an ice load. It must be capable of maintaining the correct alignment of the luminaire and able to withstand the impact should the pole be struck. For breakaway poles, the foundation must be rigid enough to allow the breakaway device to operate while not becoming a hazard itself.

Luminaire foundations are perhaps one of the most dangerous constructed hazards on the right-of-way. This is due to their placement or location, structural design, and unsafe wiring systems. Historically, pole foundations have been poured-in-place concrete with steel reinforcing rods and anchor bolts. The requirement that upon breakaway nothing shall project more than 4 in (100 mm) above a chord line drawn between two points 5 ft (1.5 m) apart has caused redesign of concrete foundations. It has been recognized for several years that a problem exists when a foundation is placed on a slope. As early as 1985, a memorandum was issued stating that designers should not allow the slope between the travelway and the foundation to be greater than 6:1. This is even more effective when the diameter of the foundation is as small as possible, thus limiting the concrete protruding above the grade line. Eliminating the transformer base allows the foundation to be sized to accommodate the pole bolt circle, which in most roadway size poles is considerably less than the bolt circle for a transformer base. In order to do this, the electrical circuit elements that were formerly housed in the T-base—i.e., splices in the conductors, fuse holders, and surge arresters—must be relocated underground. This requires that the electrical components be capable of being fully submerged and remain watertight. Figure 7.68 provides an example of a small-diameter concrete foundation and adjacent underground electrical junction box design.

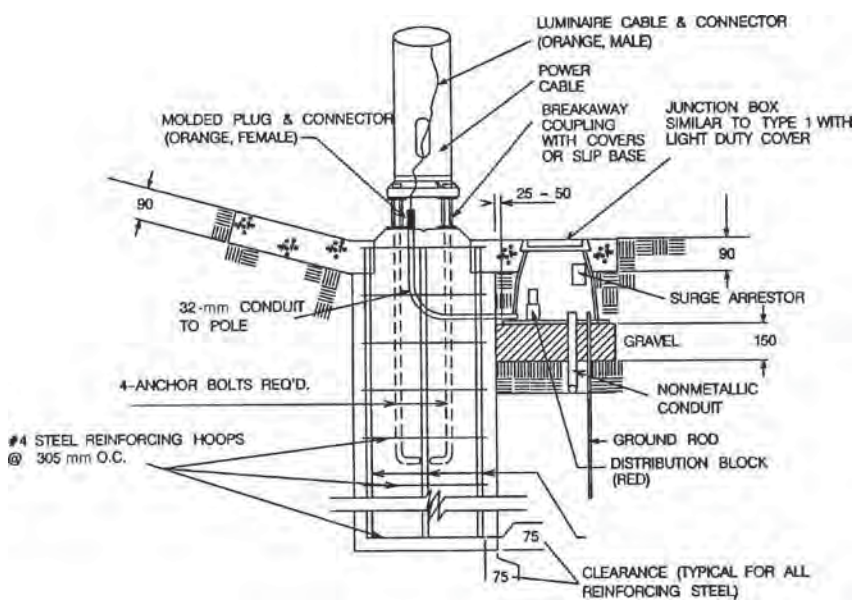

FIGURE 7.68 Small-base concrete luminaire foundation system with underground modular cable distribution system. Dimensions shown as mm. Conversions: 25 mm = 1 in, 32 mm = 1.25 in, 50 mm = 2 in, 75 mm = 3 in, 90 mm = 3.5 in, 150 mm = 6 in, 305 mm = 12 in.

www.EngineeringEBooksPdf.com

Auger bases are an effective method of reducing diameter of the foundation. Many states use a galvanized steel auger base foundation instead of concrete. Most concrete foundations require 3 in (75 mm) of concrete outside the anchor bolts to provide the necessary strength. Even if the T-base is eliminated, a concrete foundation is 6 in (150 mm) larger in diameter than the pole base it serves. The flat steel top of the auger base foundation can be the same size as the pole base, which minimizes foundation size. Another advantage of the auger base foundation, with the circuit elements underground, is the resistance to damage when an accident breaks the pole. When a concrete foundation, with its anchor bolts poured in place, has one bolt damaged, the entire foundation should be replaced. The auger base foundation uses relatively short bolts, which are replaceable if damaged. Auger base foundations are easily installed by the electrical crew using the same auger trucks used to drill the hole for the concrete shaft. Electrical crews are not called upon to tie reinforcing steel, set and properly align anchor bolts, or finish the concrete—all tasks that require skill to perform properly. It has been reported that a two-worker crew can install 8 to 10 auger base foundations per day, resulting in significant labor savings. A diagram of the auger base foundation with underground electrical junction box is provided in Fig. 7.69.

Pole foundations cannot always be installed on a 6 to 1 slope, as described in many publications by the FHWA as being necessary to ensure the proper operation of a pole breakaway device. To meet the requirement that no part of the foundation or remaining stub of a breakaway device extend no more than 4 in (100 mm) above a theoretical line connecting possible tire tracks 60 in (1525 mm) apart, it is desirable to reduce the diameter of the foundation. If a concrete foundation is 30 in (760 mm) in diameter, then on a 6 to 1 slope, which is the very best condition expected, there will be 5 in (125 mm) of concrete protruding above the ground plus the anchor bolts and the remaining portion of the breakaway device after breaking. Figure 7.70 shows a conventional transformer base installed on a concrete foundation. A 17-in (430-mm) bolt circle is normal for the current transformer base design and 3 in (75 mm) of concrete is needed outside

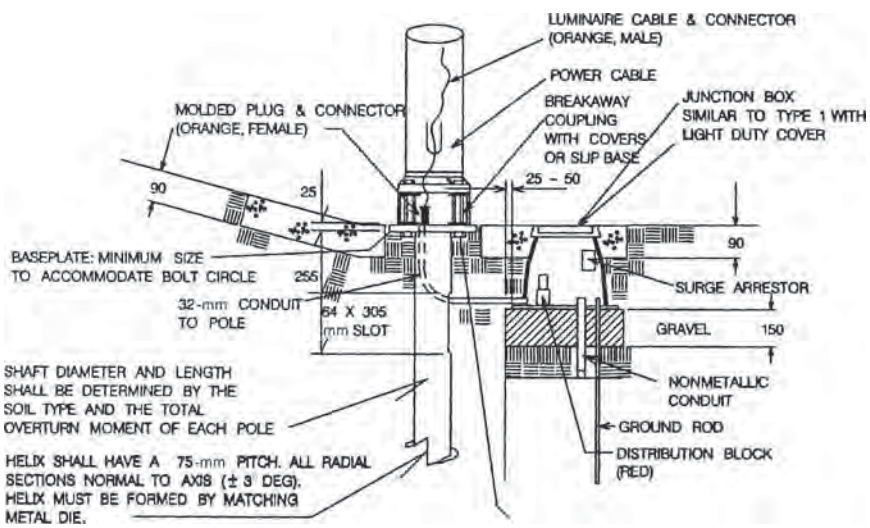

FIGURE 7.69 Auger base luminaire foundation system with underground modular cable distribution system. Dimensions shown as mm. Conversions: 25 mm = 1 in, 32 mm = 1.25 in, 50 mm = 2 in, 64 mm = 2.5 in, 75 mm = 3 in, 90 mm = 3.5 in, 150 mm = 6 in, 255 mm = 10 in, 305 mm = 12 in.

www.EngineeringEBooksPdf.com

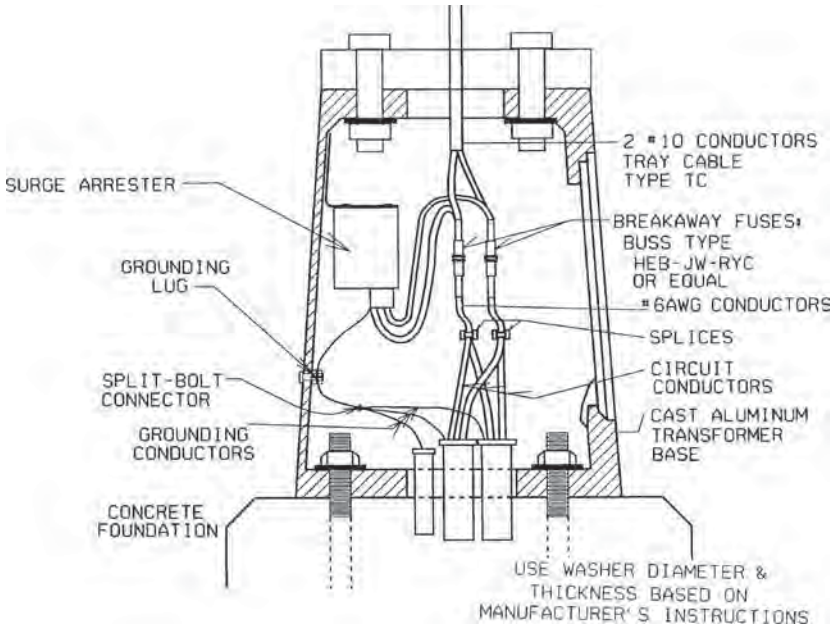

FIGURE 7.70 Details of conventional transformer base installed on concrete foundation. (*Note*: Does not meet latest AASHTO recommendations.)

the bolt circle for strength, resulting in a foundation diameter of 23 in (580 mm). Although there are thousands of existing installations of this type still in service, this design (Fig. 7.70) does not meet the recommendations of the latest AASHTO structural supports specifications for protecting the wiring and the fuses from possible damage when impacted by a vehicle.

The foundation design shown in Fig. 7.71 incorporates the flush-mounted junction box made possible by the submersible wiring system. This allows the bolt circle to be reduced to that required by the pole base plate, usually in the range of 11 to 13 in (280 to 330 mm). The smallest foundation that can be provided is a steel plate that is the size of the pole base. This is attached to a steel shaft that extends into the soil approximately 5 to 8 ft (1.5 to 2.5 m) deep. This foundation design including the submersible wiring is shown on a 3 to 1 slope in Fig. 7.72. These foundations are available from several sources including Dixie Division of Aluma-Form [15] and the A. B. Chance Company [16]. Such a foundation is combined with the flush grade mounted junction box and the submersible Modular Cable System and either a frangible coupling or a slip base pole to achieve an effective breakaway lighting pole installation. Lighting designers cannot always influence the design of a roadway's shoulders and front slopes, but by using this foundation, designers do all within their power to ensure requirements of the AASHTO *Roadside Design Guide* are satisfied.

The Modular Cable System mentioned is recommended for use in both breakaway and nonbreakaway pole bases. Because there is only one splice to be made at each pole, with the other connections made by plug-in connectors, the time required to install and the skill level needed of the installer are minimal. Also, when troubleshooting a defective circuit, it is a great advantage to be able to unplug the various circuit elements rather than deal with permanent splices.

www.EngineeringEBooksPdf.com

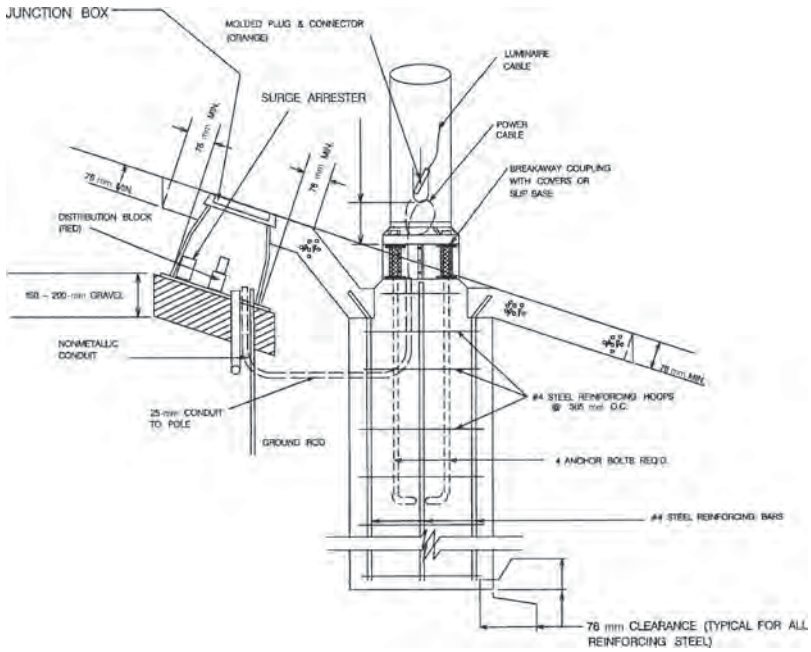

FIGURE 7.71 Flush-mounted electrical junction box. Conversions: 25 mm = 1 in, 76 mm = 3 in, 150 mm = 6 in, 200 mm = 8 in, 305 mm = 12 in.

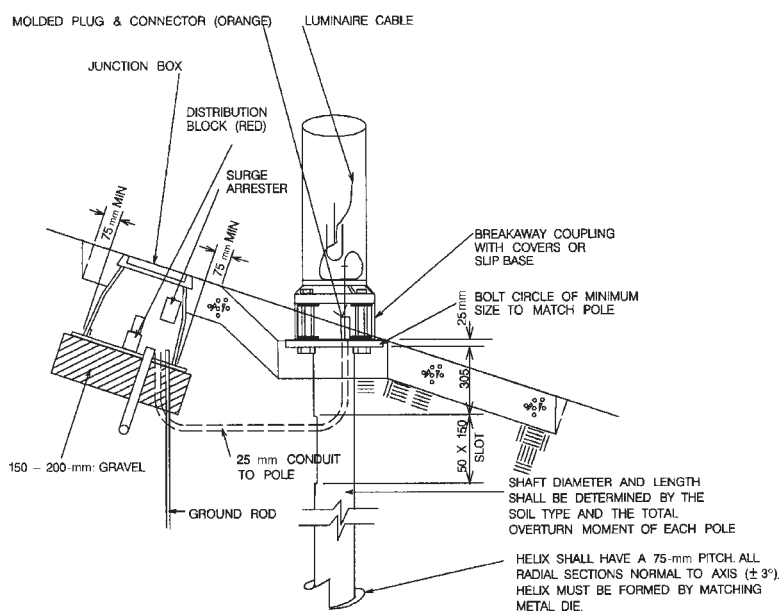

FIGURE 7.72 Foundation design on 3 to 1 slope with submersible wiring. Dimensions shown as mm. Conversions: 25 mm = 1 in, 50 mm = 1 in, 75 mm = 3 in, 150 mm = 6 in, 200 mm = 8 in, 305 mm = 12 in.

www.EngineeringEBooksPdf.com

7.27 BASES

Breakaway luminaire poles are designed to yield at their base attachment to the foundation. There are numerous types of bases currently in service. Some of these are designed for breakaway operation and others are not designed to yield. The nonyielding types have application where vehicle speeds are low and the danger from a falling pole is greater than the hazard of hitting the rigidly mounted pole. A description of the most common base types follows. Not all of these bases are crashworthy.

Direct Burial Base. The direct burial base allows the pole to be directly embedded in the soil. It is the most economical, since it eliminates the need for a foundation. It is the common type of base for wood and is used frequently with concrete and fiberglass reinforced plastic (FRP) poles. FRP poles are the only direct burial poles currently approved for breakaway use. The other types are normally limited to low-speed facilities or should be located out of the recoverable area.

Flange Base. Most steel and aluminum poles are fitted with a plate or flange at the base of the pole. With steel poles, this usually involves welding a steel plate to the bottom of the pole. With aluminum poles, a cast-aluminum shoe base is usually fitted to the bottom of the pole. The use of a flange base implies that the flange is to be fastened directly to the anchor bolts embedded in the foundation or to some type of breakaway device. When a flange is in direct contact with the concrete, some method needs to be employed that will allow water to flow out and not be trapped in the base of the pole. Trapped water can cause premature failure of the pole due to corrosion on the inside. Flange base designs without breakaway features are not crashworthy and should be restricted to where the hazard from a falling pole is greater than the hazard of impacting the rigidly mounted pole. A flange base is illustrated in Fig. 7.73.

FIGURE 7.73 Flange-type steel base.

www.EngineeringEBooksPdf.com

FIGURE 7.74 Frangible-coupling luminaire support.

Cast-Aluminum Transformer Base (T-base). T-bases may be steel or cast aluminum and were originally devised to house the transformer. The T-base (Fig. 7.70) proved unacceptable for storage of the ballast because of moisture and insect damage to the electrical components. However, the cast base proved to have safety advantages, since it yielded and broke apart upon impact. The ballast is rarely stored in the base anymore, but the T-base is still frequently installed because it serves as an electrical junction box and because of its breakaway characteristics.

Frangible Couplings. A number of manufacturers have developed cast and extruded aluminum frangible couplings. The typical coupling (Fig. 7.74) is a short connector attached to the foundation on the bottom and the flange of the pole on the top. Upon impact, the coupling fractures, separating the pole from the foundation. The proper performance of frangible couplings requires proper matching of coupling and pole. Stiffer poles work best with frangible couplings, since the stiffness of the pole results in impact forces remaining in the direction of impact (shear). Flexible poles, such as aluminum poles, bend upon impact, resulting in translation of some of the impact force to vertical forces. This places the couplings in compression and tension, forces the couplings are specifically designed to resist. Frangible couplings often need to be enclosed in skirts to keep dirt and water from entering the conduit and to keep rodents from eating the wire insulation.

Slip Base. Luminaire support slip bases are designed to resist wind and vibration loads while safely releasing upon impact from any direction. A typical base consists of two triangular plates, one welded to the support pole and the other welded to the foundation attachment. The plates accommodate three anchor bolts and are slotted to allow release upon impact. If installed correctly, the foundation part of the slip base will be

www.EngineeringEBooksPdf.com

reusable with minor repairs after impact of the support pole. The following criteria are necessary to ensure that the slip base operates correctly:

- Any bolts used to anchor the foundation piece to the foundation must be lower than the plane of the slip base.
- The upper surface of the foundation piece must be no more than 4 in (100 mm) above the surface of the surrounding terrain.
- A keeper plate, 0.05 to 0.03 in (1.3 to 0.76 mm), must be placed between the surfaces of the slip base to prevent the device from slipping apart in response to wind loads.
- Washers of sufficient strength to prevent deformations into the vee slots must be used between the plates and on the top and bottom.
- The bolts must be torqued to the specified level.

A four-bolt slip base (Fig. 7.75) is also available. Developed by Valmont Industries, it provides added structural resistance to environmental loads and is used extensively by some western states.

Shear Base. The design concept for the shear base is to load the rivets or welds that secure the base to a foundation plate. When struck by a vehicle, the rivets or welds are sequentially sheared and the support breaks away. Typical designs for shear bases are thin-walled stainless steel bases and a family of cast-aluminum bases (not T-bases).

Other. There are other breakaway methods that relate to specific materials used for the pole. These include a fiberglass-reinforced plastic pole with an anchor base that will break above a cast-aluminum base, and several schemes approved for use with aluminum poles.

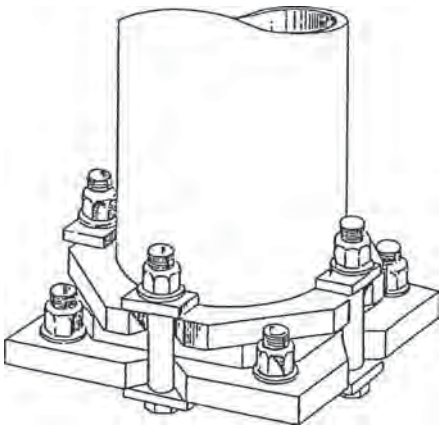

FIGURE 7.75 Four-bolt roadway lighting support slip base by Valmont Industries.

www.EngineeringEBooksPdf.com

7.28 CONSTRUCTION CONSIDERATIONS

7.28.1 Conduit on Bridges and Median Barriers

The current design standards for bridge rail and median barrier rail are very similar. Consequently, the method for installing conduit for one is applicable to the other. In the past, the most common method for installing bridge conduit was to attach it to the underside of the bridge deck. This required both the installer and the maintenance crews to work outside the bridge rail and underneath the slab by constructing special scaffolding or using expensive trucks with articulating booms. A method has recently been developed that places the conduit and junction boxes within the bridge rail. The conduit may be galvanized rigid, PVC, or high-density polyethylene (HDPE). HDPE is available on large reels in lengths up to 60 ft (1500 m). The junction box is a curb box (Fig. 7.76) and may be a standard galvanized cast iron, or a box with reinforced fiberglass sides and a polymer concrete ring and cover as manufactured by CDR [17]. The CDR box has the advantage of not requiring the cover to be grounded for safety reasons. Details of this wiring method with junction box and luminaire foundation are shown in Fig. 7.77.

This same method is also used for installing conduits for median-mounted lighting systems. In some areas, whenever a median of a divided highway is closed and a median barrier installed, an empty HDPE conduit is installed inside the barrier for future use. The advantage of using the HDPE in this case is that there are no joints required other than at bridge ends. No special skill is required to install the HDPE, so the concrete barrier construction is not delayed. When the conduit is for a future lighting system, no foundations are installed at the time the rail is constructed. A section of the barrier can be removed at a later time when the lighting system is installed to allow the conduit ends to be connected to the junction box placed at each luminaire location. Details of this foundation are shown in Fig. 7.78. Luminaire poles can be

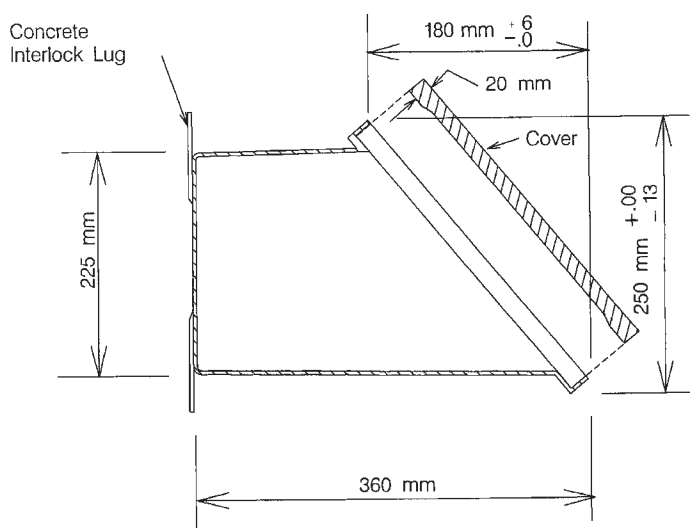

FIGURE 7.76 Curb box and cover section used for electrical junctions within bridge rail. Conversions: 6 mm = 0.25 in, 13 mm = 0.50 in, 20 mm = 0.75 in, 180 mm = 7 in, 225 mm = 9 in, 250 mm = 10 in, 360 mm = 14 in.

www.EngineeringEBooksPdf.com

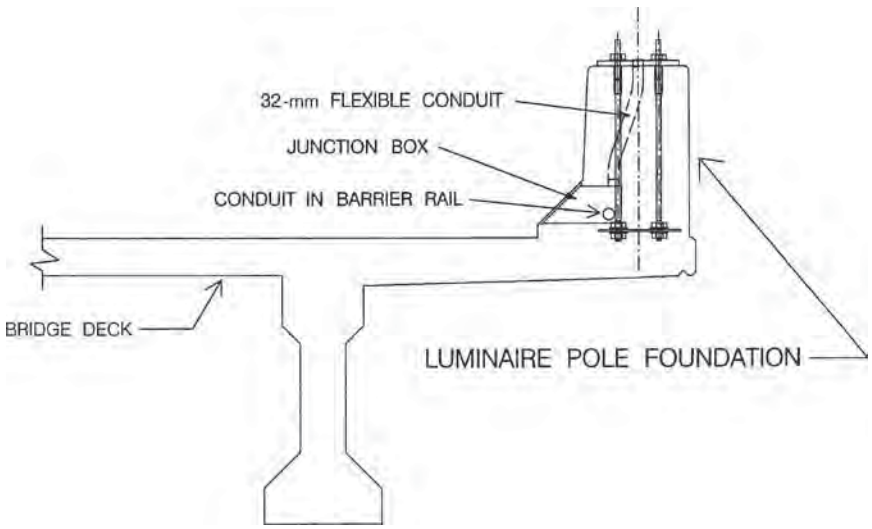

FIGURE 7.77 Details of wiring system with conduit in bridge barrier rail. Conversion: 32 mm = 1.25 in.

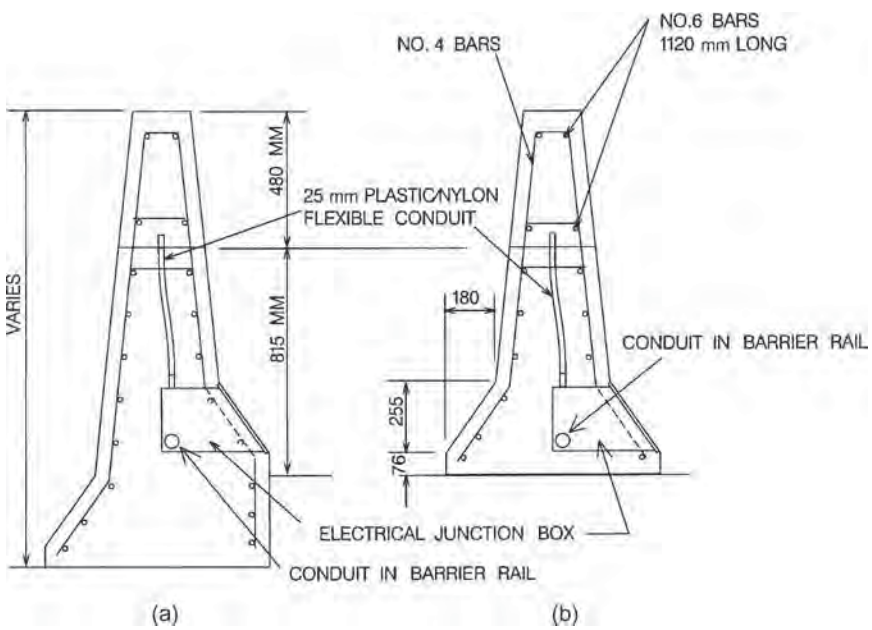

FIGURE 7.78 Details for luminaire foundation installed in concrete median barrier. (*a*) With superelevation. (*b*) Without superelevation. Dimensions shown as mm. Conversions: 76 mm = 3 in, 180 mm = 7 in, 255 mm = 10 in, 480 mm = 19 in, 815 mm = 32 in, 1120 mm = 44 in.

www.EngineeringEBooksPdf.com

easily installed on existing barriers without the encased conduit by using a modification that places the conduit in the roadway shoulder below grade and connected to the barrier rail–mounted junction box.

7.28.2 High Mast Power Connection

The conventional method of supplying electric energy to the high mast ring, with the luminaires at the top of the pole, uses a normal twist-lock plug and cap set. Some of these have a neoprene cover to provide some degree of waterproofing, but oftentimes this cover is either poorly installed or missing entirely. The result has been premature failure of the plug and cap set due to moisture. In some cases, the connectors will short-circuit between phases, and in others a large hole is burned through the connector body where the electricity arcs to a grounded structure. This latter case is particularly dangerous to the maintenance technician who attempts to reset a tripped circuit breaker while standing directly in front of the power cord connector. A method to avoid this has been developed by MG^2/Duraline by utilizing a submersible cable connector that is impervious to moisture [14].

7.28.3 Foundation Installation

A sometimes overlooked hazard on the roadside is a poorly installed foundation. Any foundation, regardless of the design, can be a hazard unless care is taken to ensure that neither any portion of the foundation nor the predicted breakline of the breakaway device is above the 4-in (100-mm) line. Strict adherence to details, such as discussed in Art. 7.26, will produce a safe foundation even on a steep slope.

7.29 ACCEPTANCE TESTS

Before any lighting system is accepted as complete, or preferably before the electricity is turned on, several tests should be conducted to ensure the quality of the components:

Insulation tests. The contractor should measure the conductor insulation resistance to ground of each lighting circuit using a 500-V megohm-range type instrument. A record should be made of each phase conductor's resistance to ground. The circuits should measure a minimum of 250,000 Ω resistance to ground before the power is turned on. The test should be arranged to test splices and all components of the circuit.

Ground resistance test. Using an instrument designed for the purpose, the contractor should measure the resistance of each ground rod. A written record of the value should be signed and given to the inspector. Any ground rod with a resistance of 25 Ω or less is acceptable. Additional ground rods, up to a maximum of three at each location, should be installed to reach the 25 Ω.

High mast lowering test. Each high mast lighting assembly should be tested by completely raising and lowering the luminaire ring once. Further testing of the latching operation for top latch devices is necessary. Each luminaire ring should be unlatched, lowered a minimum of 6 ft (2 m), then raised and relatched a total of five times to demonstrate its acceptability.

Photocontroller test. The control circuit of the lighting system should be demonstrated to show it operates properly in both manual and automatic modes. The

www.EngineeringEBooksPdf.com

lighting level at which the photocontroller actuates the system should be observed. Adjustment of the direction of the photocontroller should be made as necessary.

Voltage tests. The supply voltage at the lighting control center should be measured and recorded. With the luminaires energized and at full brightness, the voltage at the last luminaire of the circuit should be measured to ensure no more than a 10 percent voltage drop is present.

7.30 MAINTENANCE CONSIDERATIONS

Maintenance must be considered from the earliest design stages of a lighting project. Top-quality materials should be specified and then arranged or located to protect the components from the potential hazards of the environment, whether these be rain, moisture, ultraviolet degradation, or threat of vehicular impact. After a system is installed and tested for operation and for component integrity, proper maintenance procedures can produce continued high performance of the roadway lighting system. If the lighting system is not properly maintained, the responsible authorities may expose themselves to potential liability—plus increased costs if expendable items are not replaced as they reach the end of their service life, because they can cause other components to fail.

7.30.1 Maintenance Operations

There are many reasons to routinely maintain a lighting system. The first reason is that only through good maintenance can the system continue to perform as designed. No matter how much knowledge and skill goes into the design, and how much care is put into the installation inspections and final system testing, the system will not provide the performance expected of it if regular maintenance is not performed. In addition to the legal liabilities of a substandard lighting system, the condition of the system reflects the civic concern of the responsible agency. A lighting system containing faults such as burned out lamps, dirty luminaires, or knocked-down poles reflects a poor attitude that is very noticeable. Another factor is that the electrical energy costs are more or less constant even though the light on the roadways may be significantly reduced, so the economic efficiency is decreased.

7.30.2 Routine versus Demand Maintenance

Maintenance activities usually fall into one of two categories: demand or routine. Demand-responsive maintenance is response to random occurrences such as luminaire failures—i.e., lamps, fuses, ignitors, ballasts—or pole knockdowns. Routine maintenance is scheduled activities such as group lamp replacement or luminaire cleaning that are intended to produce a certain level of performance of the lighting system and eliminate some of the demand maintenance [18].

7.30.3 Maintenance Guidelines

A comprehensive discussion of roadway lighting maintenance is presented in "Design Guide for Roadway Lighting Maintenance," IESNA DG-4. In addition to the factors affecting maintenance, this guide includes information for establishing a maintenance management system that will be helpful to agencies attempting to upgrade maintenance activities.

www.EngineeringEBooksPdf.com

7.31 IMPACT PERFORMANCE CRITERIA

The following criteria are necessary to ensure satisfactory impact performance of luminaire supports.

- Use only designs that have been approved as crashworthy by the FHWA.
- The FHWA has established upper limits on the support mass and height of luminaire supports. These limits are applicable even when the breakaway characteristics have proven acceptable by crash testing. The maximum acceptable support weight (mass) is 1000 lb (454 kg), and the maximum luminaire support height is 60 ft (18.3 m). These values are increased from the limits of 600 lb (272 kg) and 50 ft (15.2 m) cited a few years ago. Any further increases in these limits should be based on full-scale crash testing and an investigation of vehicle characteristics beyond those recommended in NCHRP Report 350 [13, 19].
- Breakaway devices are designed to operate by being subjected to horizontal forces (device placed in shear). The devices are designed for this to occur when impacted at a typical bumper height of about 20 in (510 mm). Locating luminaire supports where they will be impacted at a different height will result in forces directed parallel to the support and thereby loading the devices in tension and compression. This results in improper operation of the breakaway device and possibly severe impacts and injuries to vehicle occupants. Superelevation, slope rounding, offset side slopes, curves, curbs, vehicle departure angle, and speed can all influence the striking height of a typical bumper. Negative side slopes should be limited to 1:6 between the roadway and the luminaire to help ensure that errant vehicles strike the support at an acceptable height [13].
- Use a wiring system that allows all circuit components to be shielded from impact, preferably underground, and that ensures that all electrical energy potentially available at the pole foundation surface is limited by the current-limiting fuses. Conductors protected only by a circuit breaker should be not be accessible in the pole base.
- The major cost of a luminaire assembly is the pole, foundation, and breakaway devices. Select luminaires for performance and for a design flexibility that allows more selection of pole locations to produce a lighting system with fewer potential hazards.
- As a general rule, a pole will fall in line with the path of an impacting vehicle. The mast arm usually rotates so that it is pointing away from the roadway when resting on the ground. Consideration, however, must be given to the fact that falling poles may endanger pedestrians and may pose a danger to other motorists.
- A maximum 4-in (100-mm) stub height must be maintained to prevent vehicle snagging. Quick-disconnect electrical circuitry should also be used to facilitate the breakaway mechanism, to reduce the hazard of electrical shock from exposed wiring after impact, and to ease repairs.
- Foundations should be properly sized for surrounding soil conditions. Foundations that move through the soil upon impact place the breakaway mechanisms in bending rather than shear, resulting in improper actuation.
- Curbs, regardless of their shape or height, will elevate an impacting vehicle. The rise in height begins approximately 18 in (460 mm) from the curb and can extend as far as 10 ft (3050 mm). When possible, therefore, luminaire supports should be placed 10 ft (3050 mm) from the curb. If this is not possible, then they should be located closer than 3 ft (610 mm) from the curb. Luminaire poles placed between 3 and 10 ft (610 and 3050 mm) behind curbs increase the chances of improper breakaway operation.

www.EngineeringEBooksPdf.com

- If a luminaire support is placed behind a barrier, it may not be necessary to provide a breakaway feature. In general, if the support is within the design deflection distance of the barrier, then either the barrier should be stiffened or a breakaway pole support should be used.
- Some agencies place luminaire assemblies on top of concrete median barriers. High-angle impacts, or impacts by large trucks or buses, can cause a luminaire mounted on top of a barrier to be struck. Breakaway design is not recommended for this type of installation because of the risk that a downed pole might pose to opposing traffic.
- If a luminaire support is to be placed on top of a concrete barrier, then the barrier must be adapted to fit the pole base. Concrete safety-shape types are typically designed with an approximately 6-in-wide (150-mm) top surface. Since luminaire bases are typically 8 to 12 in (200 to 305 mm) in width, it is necessary to either widen the barrier top to 12 in (305 mm), or flare the barrier in the area of the luminaire.
- Design alternatives should be investigated with the goal of reducing the number of luminaires used along a section of roadway. Higher mounting heights can significantly reduce the total number of supports needed. Tower or high mast lighting can be used to effectively illuminate major interchanges. This method reduces the number of poles and locates the supports much farther from the roadway.
- It should be noted that some agencies are experiencing problems with the failure of aluminum T-bases due to environmental loads. It is believed that this kind of failure, such as shown in Fig. 7.79, is initially caused by minor impacts from mowing units and other maintenance equipment. This causes small cracks at the bottom flange of the T-base that grow under environmental loads. The result is eventual separation of the bottom flange from the T-base as in Fig. 7.80.

FIGURE 7.79 Failure of luminaire support without impact.

www.EngineeringEBooksPdf.com

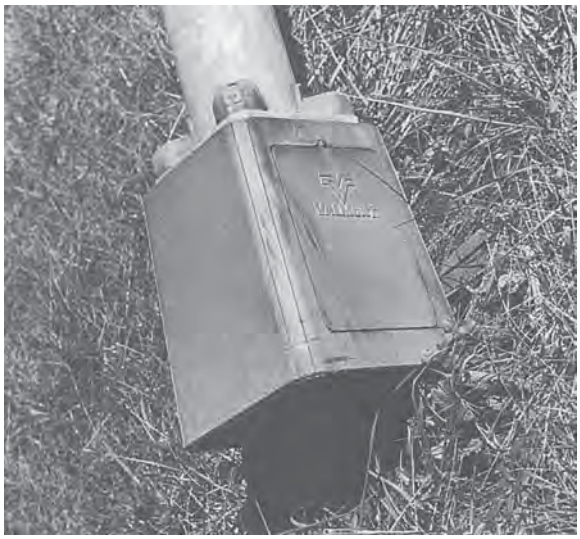

FIGURE 7.80 Separation of bottom flange from T-base.

7.32 STRUCTURAL DESIGN

Detailed provisions for the structural design of supports for lighting, signs, and traffic signals are available from AASHTO [20].

7.33 REFERENCES ON LIGHTING

1. Joint Committee of the Institute of Traffic Engineers and the Illuminating Engineering Society of North America, "Public Lighting Needs," *Illuminating Engineering,* vol. 61, no. 9 (September 1966), p. 585.
2. Box, Paul C., "Relationship between Illumination and Freeway Accidents," *Illuminating Engineering,* vol. 66, no. 5 (May–June 1971), p. 365.
3. Federal Highway Administration, *Roadway Lighting Handbook—Implementation Package 78-15,* U.S. Department of Transportation, Washington, D.C., 1978.
4. *Value of Public Roadway Lighting,* Illuminating Engineering Society of North America, New York, 1989.
5. Odle, H. A., *Light and Sight,* Holophane, Inc., 218 Oakwood Ave, Newark, Ohio.
6. Federal Highway Administration, *Roundabouts—An Informational Guide*, Publication No. FHWA-RD-00-067, U.S. Department of Transportation, Washington D.C., 2000.
7. "American National Standard Practice for Roadway Lighting," ANSI/IES RP-8-1983, Illuminating Engineering Society of North America, New York, 1983.
8. AASHTO, *Roadway Lighting Design Guide,* American Association of State Highway and Transportation Officials, Washington, D.C., 2005.
9. IESNA Roadway Lighting Committee, "American National Standard Practice for Tunnel Lighting RP-22," Illuminating Engineering Society of North America, New York, 1995.

www.EngineeringEBooksPdf.com

10. Walton, N. E., and N. J. Rowan, "Warrants for Highway Lighting," NCHRP Report 152, National Cooperative Highway Research Program, Transportation Research Board, Washington, D.C., 1974.
11. Ketvirtis, A. P., *High Masts Meet Modern Highway Illumination Needs,* Fenco Engineers, Inc., Toronto, Ont., Canada.
12. Ketvirtis, A. P., *High Mast Lighting Design: Concepts and Practice,* Fenco Engineers, Inc., Toronto, Ont. Canada.
13. *Roadside Design Guide,* American Association of State Highway and Transportation Officials, Washington, D.C., 2002.
14. Mg^2, 1718 28th Avenue South, Birmingham, AL 35209.
15. Dixie Division of Aluma-Form, Inc., P.O. Box 170040, Birmingham, AL 35317-0040.
16. A. B. Chance Company, 210 North Allen Street, Centralia, MO 65240.
17. CDR Division of Homac Manufacturing Company, P.O. Box 1118, Ormond Beach, FL, 32175.
18. "Roadway Lighting Maintenance," IESNA DG-4-1993, Illuminating Engineering Society of North America, New York, 1993.
19. Ross, Hayes, Jr., Dean L. Sicking, Richard A. Finimer, and Jarvis D. Mickie, "Recommended Procedures for the Safety Performance Evaluation of Highway Features," NCHRP Report 350, Transportation Research Board, Washington, D.C., 1993.
20. *Standard Specifications for Structural Supports for Highway Signs, Luminaires and Traffic Signals,* American Association of State Highway and Transportation Officials, Washington, D.C., 2001; *Interim Specifications*, AASHTO, Washington, D.C. 2002.

www.EngineeringEBooksPdf.com

CHAPTER 8
RETAINING WALLS

A. J. Siccardi, P.E.
Formerly, Staff Bridge Engineer
Colorado Department of Transportation
Denver, Colorado

S. C. (Trever) Wang, Ph.D., P.E.
Senior Engineer
Colorado Department of Transportation
Denver, Colorado

Retaining walls are an important element in highway construction. They are most frequently constructed in the highway environment to retain a mass of earth. They are also used to enable the highway designer to establish grade lines for roadways at differing elevations when such roadways are in close proximity to one another and are to be constructed within limited rights-of-way, as is generally the case in densely populated urban locations.

Until 1972, when the first Reinforced Earth wall in the United States was built in California, retaining walls utilized in highway construction were usually plain gravity or reinforced concrete walls. Now, the use of mechanically stabilized earth (MSE) walls has become widespread in construction throughout the United States. Because early walls included metal strap reinforcement as the primary mechanism for stabilizing the soil, corrosion of the reinforcement and lack of long-term durability were a major impediment to immediate acceptance. Currently, the utilization of metal reinforcing requires the addition of sacrificial galvanizing materials selected to ensure the design life of the structure.

More recent earth reinforcement systems utilize geosynthetic materials, which are deemed inert to attack by deicing salts used on the highways. Salts are a primary inducer of corrosion in metal reinforcement. Long-term creep characteristics of geosynthetic reinforcements, however, must be carefully considered. There are also increasingly more specialty-type walls, such as the soil nail type for both temporary and permanent wall locations, especially for slope stabilization where slope materials are appropriate for nailing. Each of these wall types is discussed briefly in this chapter.

The material in this chapter is drawn from many sources, including personal experience, but primarily from the following sources: (1) Section 5, "Retaining Walls," American Association of State Highway and Transportation Officials (AASHTO), *Standard Specifications for Highway Bridges,* 17th ed., 2002; and (2) Subsection 5 of the

www.EngineeringEBooksPdf.com

Colorado Bridge Design Manual, "Earth Retaining Wall Design Requirements," Colorado Department of Transportation. A list of references is given at the end of the chapter.

Retaining walls can also be designed by the Load and Resistance Factor Design (LRFD) method as given by AASHTO in *LRFD Bridge Design Specifications*. This is a method of proportioning structural elements by applying factors to both the loads (load factors) and the nominal strengths (resistance factors). The specified factors are based on the mathematical theory of reliability and a statistical knowledge of load and material characteristics. The load factors are multipliers (typically greater than 1.0) that take account of the variability of different types of loads, such as earth loads and live loads. Resistance factors (typically 1.0 or lower) account for inaccuracies in theory and variation of properties. Although AASHTO's goal is to use LRFD for all new construction, the traditional methods are currently the choice of most retaining wall designers and, hence, are the focus of this chapter.

8.1 EARTH RETAINING WALL CLASSIFICATION

A classification system is an essential part of the description and selection of different earth retaining wall types. Figure 8.1 indicates the many types of walls that are possible.

Earth pressure walls can be classified logically into three categories according to their basic mechanisms of retention, or into three categories based on their source of support. The retention mechanisms include internally stabilized, externally stabilized, and hybrid systems. The sources of support are described as gravity, semigravity, and nongravity.

An externally stabilized system uses a physical structure to hold the retained soil. The stabilizing forces of this system are mobilized either through the weight of a morphostable structure or through the restraints provided by the embedment of the wall into the soil, if needed, plus the tieback forces of anchorages.

An internally stabilized system involves reinforced soils to retain fills and sustain loads, adding reinforcement either to the selected fills as earth walls or to the Retained Earth directly to form a more coherent stable slope. These reinforcements can either be layered reinforcements installed during the bottom-to-top construction of selected backfill material, or be driven piles or drilled caissons built into the retained soil. All this reinforcement must be oriented properly and must extend beyond the potential failure plane of the earth mass.

A hybrid or mixed system is one that combines elements of both externally and internally stabilized systems.

Regarding sources of support, gravity walls derive their capacity through the dead weight of the wall itself or through an integrated mass that can be either externally or internally stabilized. They can further be classified into four types. The first is an internally stabilized system: earth walls with either facing covered cuts in situ doweled with uniformly spaced top-to-bottom constructed nails or selected fills reinforced with tensile reinforcements, which can be either metal (inextensible) reinforcements or geotextile (extensible) reinforcements. The second type is an externally stabilized system, either modular precast concrete walls or prefabricated metal bin walls. Third is an externally stabilized system—generic walls such as masonry, stone, dumped-rock, and gabion walls. The fourth type is an externally stabilized cast-in-place mass concrete wall or low-cost cement-treated soil wall system with anchored precast concrete facings.

Semigravity walls derive their capacity through the combination of dead weight and structural resistance. Semigravity walls designed with different shapes can be further classified into two groups: first is the conventional cast-in-place cantilever concrete wall, and second is a prefabricated system wall with cast-in-place base and many

www.EngineeringEBooksPdf.com

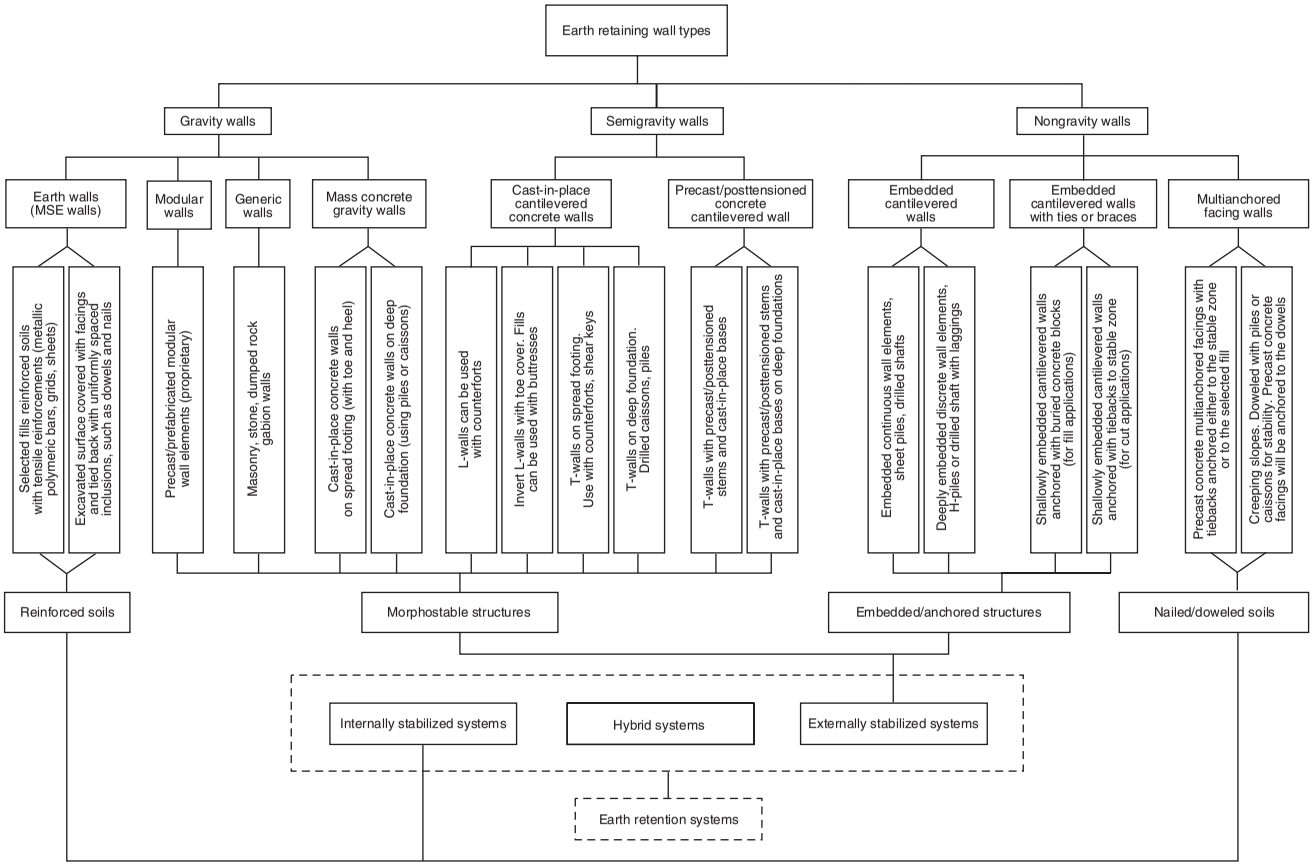

FIGURE 8.1 Types of earth retaining walls. (*From* Bridge Design Manual, *Section 5, Colorado Department of Transportation, Denver, Colo., with permission*)

www.EngineeringEBooksPdf.com

kinds of innovative precast or posttensioned stems. Semigravity walls are, in general, externally stabilized systems. They can be constructed either on spread footings or on deep foundations, such as caissons or piles, as foundation conditions may demand.

Nongravity walls derive their capacity through lateral resistance, either by embedment of vertical wall elements into firm ground, by anchorages provided by tiebacks, by dowel actions provided by piles, or by caissons drilled into a stabilized zone. They can be classified into, first, an externally stabilized system with embedded cantilever wall elements, sheet piles, drilled shafts, or slurries; second, similar embedded walls utilizing multiple anchorage tieback systems; and third, internally stabilized systems such as creeping slopes externally covered with multianchored facings and internally doweled with pile or caisson inclusions.

Wall selection is an iterative process that involves cycles of preliminary design and cost estimation. The first and most important step is to define the design problem with design objectives and constraints. The objective of almost all design problems is least cost, although there will be many cases, particularly in urban areas, where objectives will include aesthetic and environmental considerations as well. Costs such as those for materials and construction are much easier to quantify than are aesthetic and environmental costs. In the latter instances, it is sometimes difficult to verify which one of the feasible solutions is the best. In order to find solutions that are at least feasible, constraints such as serviceability requirements (wall horizontal movement, vertical differential settlement, etc.) and spatial limitations (rights-of-way, underground easements, etc.) should be defined as comprehensively as possible. Designs (wall types) that meet the prescribed constraints are all *feasible* solutions. A ranking of these feasible solutions (wall types) is required. The ranking should include spatial behavior and economic factors as discussed later in this article. Ideally, the wall with the highest rank should be adopted for detailed design; the rest can be used as design alternatives or discarded if the selected wall is confidently lowest cost, or is the only wall that satisfies all the established design requirements.

At the beginning of the selection process, rough sketches labeled with wall types should be adequate to screen out unfeasible types. As the selection process proceeds, a conceptual design with preliminary dimensions should be generated. Factors affecting the selection of an earth retaining structure may be grouped into three categories: spatial constraints; behavioral constraints; and environmental, aesthetic, and economic considerations. Factors to be considered for each of these categories are listed below.

1. Spatial constraints
- ***A.*** Functions of wall
  - **(1)** Provide room for roadway at front of wall
  - **(2)** Retain roadway at back or top of wall
  - **(3)** Provide for grade separation, landscaping, or noise control
  - **(4)** Provide for ramp or underpass wall support
  - **(5)** Provide for temporary shoring of an excavation
  - **(6)** Ensure stability of steep side slope
  - **(7)** Flood control
  - **(8)** Serve as bridge abutment
  - **(9)** Other
- ***B.*** Space limitations and site accessibility
  - **(1)** Right-of-way boundaries
  - **(2)** Geological boundaries
  - **(3)** Access of material and equipment
  - **(4)** Temporary storage of material and equipment
  - **(5)** Maintaining existing traffic lanes or widening

www.EngineeringEBooksPdf.com

(6) Temporary and permanent easement
(7) Other

C. Proposed finished profile (using combinations of different wall types along the wall alignment may be the optimal solution)
(1) Limit of radius of wall horizontal alignment
(2) Cut or fill with respect to original slope
(3) Minimal site disturbance:
(*a*) Anchored wall with minimal cut
(*b*) Stepped-back wall on terrace profile
(*c*) Superimposed or stacked low walls
(*d*) Mechanically stabilized earth (MSE) wall with truncated base or trapezoidal reinforced zone

D. Check available space versus required dimensions
(1) Working space in front of wall (shoring, formwork, etc.)
(2) Wall base dimension
(3) Wall embedment depth
(4) Excavation behind wall
(5) Underground easement
(6) Wall front face battering
(7) Superimposed walls or trapezoidal profile of wall back

2. Behavioral constraints

A. Earth pressure estimation (magnitude and location)
(1) The magnitude of the earth pressure exerted on a wall is dependent on the amount of movement that the wall undergoes.
(2) The vertical component of earth pressure is a function of the coefficient of friction and/or relative displacement (settling) between wall (stem, facing, and Reinforced Earth mass) and retained fill.
(3) Compaction of confined soil may result in developing of earth pressure greater than active or at-rest condition.
(4) For complex or compound walls such as bridge abutments, battered-faced walls, superimposed walls, and walls with trapezoidal backs, a global limit equilibrium analysis is required.
(5) For embedded cantilever walls, profiles of lateral pressures acting on both sides of a wall are affected by the location of the center of wall rotation (pivot point), which is construction-dependent.
(6) For multianchored embedded cantilever walls using a minimum penetration depth where there is no static pivot point, the soil pressure profile is anchorage design–dependent and should be developed with the recognition of beam-on-elastic foundation principles.
(7) At the ultimate limit state, the location of the horizontal earth pressure resultant moves up from 0.33 to 0.40 of the wall height.

B. Groundwater table
(1) Reduce hydrostatic pressure if possible by an appropriate drainage system.
(2) Introduce special precautions to reduce corrosion.
(3) Prevent soil saturation; an appropriate groundwater drainage system is required except when the water table level must be maintained to prevent settlement of adjacent structures.

C. Foundation pressure estimation
(1) Uniform average pressure by Meyerhof effective width method for mechanically stabilized earth wall systems
(2) Maximum toe pressure by flexural formula method for unreinforced or reinforced concrete–type walls

www.EngineeringEBooksPdf.com

D. Allowable bearing capacity estimation
- **(1)** Allowable bearing capacity is limited by and related to preset settlement or differential settlement criteria.
- **(2)** Earth walls integrated with wider flexible bases are allowed higher bearing capacity and tolerate more settlement than rigid walls on spread footings.

E. Allowable differential settlement
- **(1)** Settlement is a time-dependent behavior.
- **(2)** Top-of-wall settlement is a sum of settlement from wall and from subsoil strata.
- **(3)** Allowable settlement should be evaluated by considering tolerable movement of superstructure and wall precast facings.
- **(4)** Simple-span bridges tolerate more angular distortion between adjacent footings than continuous-span bridges.
- **(5)** Tolerable (vertical and horizontal) movement of a wall facing is a function of panel joint width and pattern of connection.

F. Earth pressure on wall facing
- **(1)** The rigidity and slope of a wall facing affect the development of lateral pressure and displacement at facing.
- **(2)** The earth pressure is reduced with a decrease in facing stiffness, while the facing deformation is only slightly increased for a decrease in stiffness.

G. Settlement and bearing capacity improvement techniques
- **(1)** Surcharge (two-phase construction) to hasten anticipated settlement
- **(2)** Drainage (wick drain) to hasten anticipated settlement in fine-grain silt and clay substructure materials
- **(3)** Excavation and compaction of a portion of weak foundation material
- **(4)** Addition of reinforcement to subsoil
- **(5)** Use of lightweight fill material to minimize loads beyond existing precompression of foundation materials

H. Methods of reducing settlement on reinforced mass
- **(1)** Increasing compaction of fill material
- **(2)** Using more reinforcements (length, area, and spacings of reinforcements)
- **(3)** Cement treatment of fills
- **(4)** Reducing clay content of fill
- **(5)** Using high-density in situ micronails

I. Earth pressure applied at facing
- **(1)** *High:* facing with posttensioned anchors
- **(2)** *Medium-high:* mechanically stabilized earth wall with full-height panels
- **(3)** *Medium:* rigid concrete facing with inextensible reinforcements
- **(4)** *Medium-low:* concrete panel facing with extensible reinforcements
- **(5)** *Low:* concrete panel facing with nailed soil

J. Wall base width
- **(1)** Wall types, foundation types
- **(2)** Allowable bearing capacity of spread footing
- **(3)** No tension allowed at heel of spread footing
- **(4)** Internal and external stability of wall
- **(5)** Reinforcement length to control lateral movement of Reinforced Earth wall
- **(6)** Hybrid walls to reduce wall base width

K. Toe penetration depth of embedded cantilever wall
- **(1)** Water cutoff consideration
- **(2)** Heave in front of wall
- **(3)** Bearing capacity
- **(4)** Stability of passive toe kickout
- **(5)** Slope of ground in front of wall

www.EngineeringEBooksPdf.com

L. Wall sensitivity to differential settlement
- **(1)** *High:* cast-in-place concrete retaining walls
- **(2)** *Medium:* earth walls with inextensible reinforcements, geogrid walls with facings, precast modular walls
- **(3)** *Medium-low:* geofabric walls without facing
- **(4)** *Low:* gabion walls, crib walls, embedded cantilever walls, multianchored cantilever walls

M. Potential settlement of retained mass
- **(1)** *High:* embedded cantilever walls
- **(2)** *High-medium:* some concrete modular walls, geofabric walls
- **(3)** *Medium:* cast-in-place concrete retaining wall, concrete modular walls, geogrid walls
- **(4)** *Medium-low:* earth walls with inextensible reinforcements
- **(5)** *Low:* multianchored embedded cantilever walls

N. Relative construction time
- **(1)** *Long:* cast-in-place concrete walls
- **(2)** *Medium:* earth walls with reinforcements
- **(3)** *Short:* embedded cantilever walls, multianchored embedded cantilever walls, precast modular walls

O. Wall design life
- **(1)** Structural integrity
- **(2)** Color and appearance

P. Load-carrying capacity and settlement of deep foundation
- **(1)** Maximum frictional resistance along the pile shaft will be fully mobilized when the relative displacement between the soil and the pile is about $^1/_4$ in irrespective of pile size and length.
- **(2)** Maximum point resistance will not be mobilized until the pile tip has gone through a movement of 10 to 25 percent of the pile width (or diameter). The lower limit applies to driven piles, and the upper limit is for bored piles.
- **(3)** The ultimate load-carrying capacity is the sum of pile point and total frictional resistance.
- **(4)** Pile-to-cap compatibility should be considered, especially with battered piles and semirigid pile-cap connection.
- **(5)** For the estimation of group efficiency in vertical and horizontal displacement, calculation of pile group, pile diameter, spacing, soil type, and total number of piles should be considered.

Q. Fill material properties
- **(1)** The lower the soil friction angle, the higher the internal earth pressure restrained by the wall.
- **(2)** The lower the soil friction angle, the lower the apparent friction coefficient for frictional reinforcing systems.
- **(3)** The higher the plasticity of the backfill, the greater the possibility of creep deformation, especially when the backfill is wet.
- **(4)** The greater the percentage of fines in the backfill, the poorer the drainage and more severe the potential problem from high water pressure.
- **(5)** The more fine-grained and plastic the fill, the more potential there is for corrosion of metallic reinforcement.

R. Fill retention versus cut retention
- **(1)** Fill retention (bottom-to-top construction)
  - (*a*) Earth walls (extensible and inextensible tensile reinforcements)
  - (*b*) All semigravity walls
  - (*c*) Modular walls, generic walls, and mass concrete walls

www.EngineeringEBooksPdf.com

(2) Cut retention (top-to-bottom construction)
(*a*) Earth walls, soil nails
(*b*) All nongravity walls

3. Environmental, aesthetic, and economic considerations
A. Environmental constraints
(1) Ecological impacts on wetlands
(2) Effect of corrosive environment on structural durability
(3) Water pollution, sediment, or contaminated material
(4) Noise or vibration control policy
(5) Stream encroachment
(6) Fish and wildlife habitat or migration routes
(7) Unstable slope
(8) Other
B. Aesthetic constraints
(1) Urban versus rural
(2) Design policy of scenic routes
(3) Acoustic or aesthetic properties of wall facing
(4) Antigraffiti wall facing
(5) Avoiding valley effect of long or high wall
(6) Other
C. Economic considerations
(1) Construction schedule
(2) Availability of fill material
(3) Supply of laborers
(4) Heavy equipment requirements
(5) Formwork, temporary shoring
(6) Dewatering requirements
(7) Available standard designs
(8) Temporary versus permanent wall and future widening
(9) Cost of drainage system
(10) Design and installation of wall attachments
(11) Negotiated bidding and design/build on nonstandard projects
(12) Maintenance cost, readjustment, and remodeling
(13) Uncertainty of site and wall loads
(14) Complexity of project
(15) Height differences in finished or base grades
(16) Number of wall turning points
(17) Scale of project
(18) Length or height of wall—quality control of fill material
(19) Posttensioning, grouting, trenching, slurry
(20) Pile driving, caisson drilling
(21) Precasting, transportation, and inspection
(22) Quantity of excavation
(23) Quantity of backfill material
(24) Experience and equipment of local contractor
(25) Proprietary product and quality assurance
(26) Other

The logical consequence of considering these factors is to reduce the number of feasible wall types. The first stage of the decision process eliminates obviously inappropriate walls through spatial and behavior constraints before considering economic factors. The behavior constraints involve the properties of the earth the wall must retain and the ground it rests on. A detailed geological investigation and soil property report is needed in the second stage of the decision process. At this stage, conceptual designs with dimensioned

www.EngineeringEBooksPdf.com

wall sections and subsoil strata are required. In the third stage, behavior constraints and economic constraints should be repeatedly or simultaneously considered.

After identification of the feasible set of wall types (a subset of the available walls), work proceeds on the more refined or detailed preliminary designs. Then a rating of these feasible designs should be made.

To consider the various factors during the selection process, use the worksheets shown in Figs. 8.2, 8.3, and 8.4, along with the properly defined design problems (objectives and constraints) and cost requirements (Fig. 8.5). These sheets form a part of the documentation in support of the final selection(s).

After the worksheets are completed, a list of selected wall types with conceptual designs should be generated. A rating matrix can then be developed for a qualitative evaluation of the selected alternatives. On the basis of each evaluation factor, a qualitative rating between 1 and 5 can be given each alternative. The qualitative ratings are usually multiplied by weight factors reflecting the importance of the factors; usually, cost- and durability-related factors are given higher weights than the rest. The alternative(s) with the highest score is (are) then selected for final design and detailed cost estimation.

The intent of this procedure is to identify equally satisfactory alternative wall types. The plans or specifications will provide the opportunity for the contractor to select from the acceptable alternatives, should the designer make the decision to permit alternative walls. The specifications will outline the acceptable alternatives with dimensioned conceptual designs and indicate the requirements for the contractor to submit final site-specific details. These submitted (design/build) shop drawings should clearly establish that the design criteria are satisfied. They may include aesthetic features, bearing capacity and stability requirements, design computations for the alternative site-specific selection signed and sealed by a licensed professional engineer, and other data as may be necessary to document compliance with project needs.

8.1.1 Evaluation Factors

Evaluation factors that can be used on selected conceptual wall designs include the following:

- Constructibility
- Maintenance
- Schedule
- Aesthetics (appearance)
- Environment
- Durability or proven experience
- Available standard designs
- Cost

The sum of all weight factors should be 100 points. To simplify the selection process, minor factor(s) may be removed from the rating matrix. This is readily achieved by assigning the same score for minor factors on all the selected feasible wall types.

8.1.2 Notes on Using the Worksheets (Figs. 8.2, 8.3, and 8.4)

1. Factors that can be evaluated in percentage of wall height
  A. Base dimension of spread footing
  B. Embedded depth of wall element into firm ground

www.EngineeringEBooksPdf.com

Measurement indicators:

L Large H High Y Yes

M Medium M Medium ?

S Small L Low N No

System names and descriptions			Spatial factors								Behavior factors											Economic factors					
			Ftg. width (emb. depth) to height ratio	Maximum economical wall height (ft)	Excavation behind wall	Working space of wall	Front face battering	Trapezoidal wall back	Sensitivity of marginal bearing capacity	Sensitivity of differential settlement	Lateral movement	Marginal backfill material	Unstable slope	Scour and flood	High water table/seepage	Load-carrying structural facing	Active earth pressure condition	Construction-dependent loads	Noise/water pollution	Quantity of backfill material	Fill compaction and control	Construction time	Project scale affects cost	Cost of maintenance	Availability of standard design	Labor usage	Facing as an extra cost	System durability problem	Typical illustrations
Earth walls – Reinf. soil walls	Selected fills reinforced with tensile reinforcements [either metal (inextensible) or geotextile (extensible) bars, mats, grids, etc.]		L	L	Y	Y	H	H	L	Y	Y	Y	Y	Y	Y	Y	Y	L	H	L	Y	H	Y	H	Y	Y		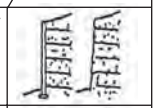
			M	M	?	?	M	M	M	?	?	?	?	?	?	?	?	M	M	M	?	M	?	M	?	?		
			S	S	N	N	L	L	S	N	N	N	N	N	N	N	N	S	L	S	N	L	N	L	N	N		
Earth walls – Nailed soil walls	Facing covered cuts with uniformly spaced, top-to-bottom constructed nails.																										
Modular walls	Precast/prefabricated modular walls. Most are proprietary products. Some patents have run out.																										
Generic walls	Prefabricated wall elements such as masonry or concrete blocks. Rough elements such as dumped rocks, gabions.																										
Mass concrete walls	Cast-in-place solid concrete walls or precast concrete facings anchored in cement stabilized soil zones.																										
Mass concrete walls	C.I.P. reinforced concrete wall on deep foundation, either drilled caissons or piles.																										

FIGURE 8.2 Gravity wall worksheet. (*From* Bridge Design Manual, *Section 5, Colorado Department of Transportation, Denver, Colo., with permission*)

www.EngineeringEBooksPdf.com

Measurement indicators:

L Large — H High — Y Yes

M Medium — M Medium — ?

S Small — L Low — N No

System names and descriptions		Spatial factors											Behavior factors											Economic factors						
		Fig. width (emb. depth) to height ratio	Maximum economical wall height (ft)	Excavation behind wall	Working space of wall	Front face battering	Trapezoidal wall back	Sensitivity of marginal bearing capacity	Sensitivity of differential settlement	Lateral movement	Marginal backfill material	Unstable slope	Scour and flood	High water table/seepage	Load-carrying structural facing	Active earth pressure condition	Construction-dependent loads	Noise/water pollution	Quantity of backfill material	Fill compaction and control	Construction time	Project scale affects cost	Cost of maintenance	Availability of standard design	Labor usage	Facing as an extra cost	System durability problem	Typical illustrations
Cast-in-place	L-walls can be used with counterforts.			L	L	Y	Y	H	H	L	Y	Y	Y	Y	Y	Y	Y	Y	L	H	L	Y	H	Y	H	Y	Y	
				M	M	?	?	M	M	M	?	?	?	?	?	?	?	?	M	M	M	?	M	?	M	?	?	
				S	S	N	N	L	L	S	N	N	N	N	N	N	N	N	S	L	S	N	L	N	L	N	N	
	Invert L-walls can be used with buttresses. Use with toe cover fills.																											
	T-walls on spread footing. Use with counterforts and shear key if applicable.																											
	T-walls or L-walls on deep foundations. Use either drilled caissons or piles.																											
Precast posttension	T-walls with precast posttensioned stem and C.I.P. base on spread footing.																											
	T-walls with precast posttensioned stem and C.I.P. base on deep foundation, either drilled caissons or piles.																											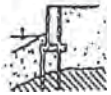

FIGURE 8.3 Semigravity wall worksheet. (*From* Bridge Design Manual, *Section 5, Colorado Department of Transportation, Denver, Colo., with permission*)

www.EngineeringEBooksPdf.com

Measurement indicators:

L Large — H High — Y Yes

M Medium — M Medium — ?

S Small — L Low — N No

System names and descriptions			Spatial factors									Behavior factors									Economic factors						
	Ftg. width (emb. depth) to height ratio	Maximum economical wall height (ft)	Excavation behind wall	Working space of wall	Front face battering	Trapezoidal wall back	Sensitivity of marginal bearing capacity	Sensitivity of differential settlement	Lateral movement	Marginal backfill material	Unstable slope	Scour and flood	High water table/seepage	Load-carrying structural facing	Active earth pressure condition	Construction-dependent loads	Noise/water pollution	Quantity of backfill material	Fill compaction and control	Construction time	Project scale affects cost	Cost of maintenance	Availability of standard design	Labor usage	Facing as an extra cost	System durability problem	Typical illustrations
Generic walls anchored with geofabric grid reinforcements. Gabion walls anchored with geogrids.			L	L	Y	Y	H	H	L	Y	Y	Y	Y	Y	Y	Y	Y	L	H	L	Y	H	Y	H	Y	Y	
			M	M	?	?	M	M	M	?	?	?	?	?	?	?	?	M	M	M	?	M	?	M	?	?	
			S	S	N	N	L	L	S	N	N	N	N	N	N	N	N	S	L	S	N	L	N	L	N	N	
Modular precast L-walls anchored with geofabric grid reinforcements.																											
Geofabric wall(s) stacked on top of T-wall.																											
Either inverted L-wall stacked on MSE wall for bridge abutment applications, or L-wall with rail stacked on top of earth wall for roadway applications.																											
T-wall with anchors added to stabilized zone. Used for wall remodeling or rehabilitation, and for roadway-widening applications.																											
T-wall with precast/posttensioned modular stem elements. Anchored with geogrid or with reinforcements.																											

FIGURE 8.4 Hybrid wall worksheet. (*From* Bridge Design Manual, *Section 5, Colorado Department of Transportation, Denver, Colo., with permission*)

www.EngineeringEBooksPdf.com

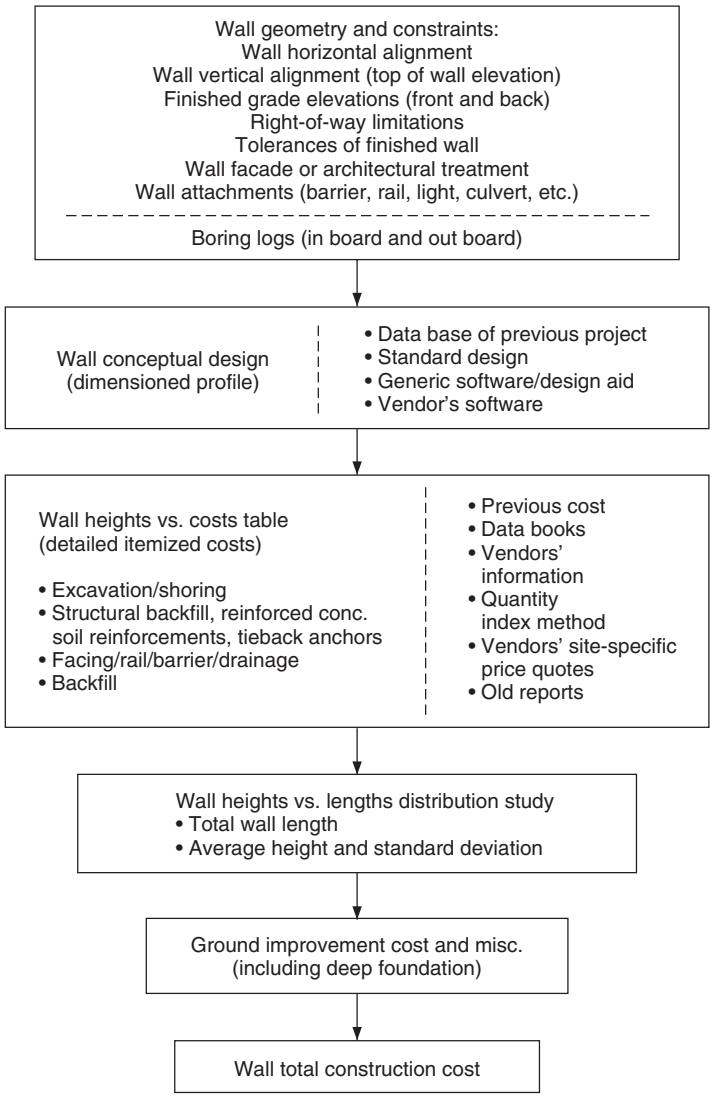

FIGURE 8.5 Requirements for wall cost study. (*From* Bridge Design Manual, *Section 5, Colorado Department of Transportation, Denver, Colo., with permission*)

2. Factors that can be described as "large (high)," "medium (average)," or "small (low)"
  A. Quantitative measurement
    (1) Amount of excavation behind wall
    (2) Required working space during construction
    (3) Quantity of backfill material
    (4) Effort of compaction and control
    (5) Length of construction time

www.EngineeringEBooksPdf.com

(6) Cost of maintenance
(7) Cost of increasing durability
(8) Labor usage
(9) Lateral movement of retained soil

B. Sensitive measurement
(1) Bearing capacity
(2) Differential settlement

3. Factors that can be appraised with "yes," "no," or "question" (insufficient information)
A. Front face battering
B. Trapezoidal wall back
C. Using marginal backfill material
D. Unstable slope
E. High water table or seepage
F. Facing as load-carrying element
G. Active (minimal) lateral earth pressure condition
H. Construction-dependent loads
I. Project scale
J. Noise or water pollution
K. Available standard designs
L. Facing cost
M. Durability

4. Factors that can be approximated from recorded height
A. Maximum wall height
B. Economical wall height

8.2 EARTH PRESSURE CONSIDERATIONS AND DETERMINATION

Once a proper selection has been made of feasible wall types that satisfy the necessary constraints, design consists of determining the earth pressure against the back of the wall and then proportioning the wall so that it will be structurally sufficient to satisfy a number of traditional checks. These checks include stability against sliding and overturning, and foundation bearing pressure limits. Clearly, satisfying the traditional checks would be of no value if the entire structure were to move because of some condition not related to any of these three checks. Therefore, it is also important that the designer be assured that the wall is globally stable—i.e., that no deep-seated slide or slip surface exists.

An important and essential part of the design of retaining walls consists of determining the earth pressure on the back of the wall. The earliest theory of earth pressure traces back to Charles-Augustin de Coulomb, who published his work in 1773. Coulomb's theory presented a method by which a designer could determine the pressure that dry, granular, cohesionless material would exert upon the back of a wall constructed to restrain the material. His work was based on the theory that failure is characterized by a wedge-shaped mass of the supported sand material that slides down along a sloping plane such as is shown in Fig. 8.6.

The Coulomb theory assumes a hydrostatic distribution of pressure such that the resultant forces R (reaction needed to hold wedge in equilibrium) and P (summation of normal pressure times area) act at the lower third point of the planes upon which they act, planes *ab* and *ac,* respectively. The force R acts at an angle of friction of soil on concrete, ordinarily 25°, while P acts at an angle of friction of soil on soil, generally assumed to be 34°. This latter angle will vary significantly from 34° to 40° or more. Because of the different angles of friction, the theory produces an error in the result;

www.EngineeringEBooksPdf.com

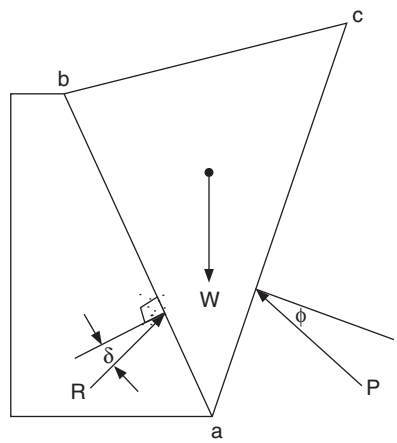

FIGURE 8.6 Forces acting on walls according to Coulomb's theory. W = weight of wedge *abc*; P = intensity of normal pressure; ϕ = angle of internal friction of backfill; δ = angle of friction of resultant force that accounts for difference in friction angle between backfill itself and backfill against concrete wall; R = pressure needed to hold wedge in equilibrium.

however, the error is generally accepted as negligible. In essence, if it is assumed that no friction exists between the earth and the wall, the pressure determined from the Coulomb theory is the same as that determined from the Rankine theory. Thus, because of its simplicity, the tendency is to use the Rankine theory. See Art. 8.2.3 for an example of active pressure calculation.

It is evident that the theory as expressed in Fig. 8.6 does not suggest a particular plane of failure. Thus, the pressure determination of the Coulomb theory is traditionally left to graphical methods, in particular those first developed by J.-V. Poncelet, and later by a German engineer, Culmann. These constructions, which allow for the complete determination of lateral pressure acting on the wall (i.e., magnitude, direction, and point of application), are not further discussed herein. However, several failure planes are usually assumed, pressure from each assumption is graphically determined, and an envelope line of pressure is developed from these pressure points from which the maximum pressure can be determined. The methods are laborious but straightforward and may again gain in popularity with the increasing use of computers.

At approximately the same time as Culmann's construction was developed, a Scottish physicist, W. J. M. Rankine, presented his theory in a work called *On the Stability of Loose Earth,* a theory that remains in active use. Rankine assumed a mass of loose earth of infinite extent, and a planar top surface subjected to its nonweight. The theory assumed granular backfill material without cohesion, but was adapted in 1915 by a British engineer to allow for cohesion.

8.2.1 States of Earth Pressure

Lateral earth pressure loadings are applied in various states—specifically, active, at-rest, and passive states. The state of pressure to be considered varies with the wall type.

www.EngineeringEBooksPdf.com

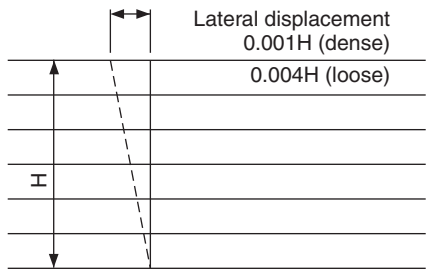

FIGURE 8.7 Lateral displacement to develop active state in cohesionless soils for yielding walls.

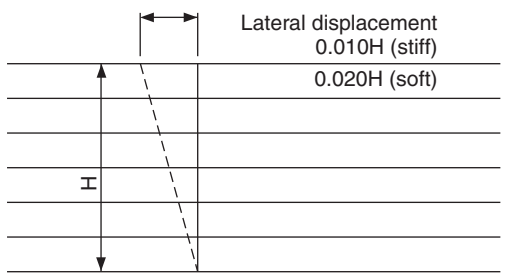

FIGURE 8.8 Lateral displacement to develop active state in cohesive soils for yielding walls.

Yielding Walls. Yielding walls are free to translate or rotate about their top or base. For such walls, the lateral earth pressure may be computed assuming active conditions and wedge theory. In general, the lateral displacement at the top of a rigid wall of height H necessary to develop the active state varies from $0.001H$ in dense cohesionless soils to as much as $0.004H$ in loose cohesionless soils. For clay soils, a greater displacement on the order of $0.01H$ to $0.02H$, for stiff and soft soils, respectively, is necessary to develop an active state. See Figs. 8.7 and 8.8.

Thus, it is noted that the amount of displacement necessary to develop active pressure can vary, say, for a 20-ft-high (6 m) wall, from less than ¼ in (6 mm), in a dense cohesionless material, to as much as 5 in (125 mm), in soft clay. Clearly, the backfill material selected at any location plays a major role in the earth pressure for which a wall must be designed.

Restrained Walls. Restrained walls are walls that are fixed or partially restrained against translation or rotation. Lateral earth pressures are computed assuming at-rest conditions using the following relationship:

$$P_0 = \frac{\gamma H^2 K_0}{2} \tag{8.1}$$

www.EngineeringEBooksPdf.com

where P_0 = resultant of at-rest earth pressure, kips/ft (N/mm)
γ = unit weight of soil or rock, kips/ft^3 (kN/m^3)
H = wall height, ft (mm)
K_0 = at-rest pressure coefficient

This latter condition may occur naturally at walls that are not totally freestanding—for example, at the junction of the wingwall at bridge abutments—or the condition may occur by design. Examples include locations where the lateral deflection cannot be tolerated because it retains a structure, or a heavily reinforced concrete counterfort wall, which is sensitive to settlement, located on material susceptible to settlement, especially differential settlement. In the latter case the designer must evaluate options that may include, depending upon the depth of the material that will settle, (1) removal and replacement, (2) deep foundations to adequate bearing material, or (3) selection of a different wall type, if conditions permit, that will be more tolerant to the potential for the differential settlement.

Should some force be present that tends to push the wall into the earth mass it is intended to retain—which therefore develops a resistance to slip on the failure plane or a resistance to the lateral displacement needed to mobilize the active pressure state—a condition known as *passive pressure* develops. The lateral earth pressure for which the wall must be designed increases significantly, as much as 10 times, and requires special attention. See Fig. 8.9 for a qualitative depiction of the relative lateral displacement.

Rigid Walls. For the case of rigid walls, which involves wall translation or rotation "into the backfill," the movement necessary to develop passive earth pressure behind the wall varies from 0.020H to 0.060H for cohesionless soils, dense to loose, respectively. Also, for stiff to soft cohesive soils, the lateral displacement will vary from 0.020H to 0.040H. It is obvious that passive earth pressures can be developed in these defined conditions. Certainly, the best way for the designer to account for these pressures is to avoid them wherever possible and practical, alleviating the conditions under which such pressures develop. This brief discussion is intended only to generate an awareness in the designer that such conditions can be created. An example would be dead-man type anchorages tying the wall top into solid materials or outside the failure plane of the wedge, thus preventing the movement necessary for development of the active pressure state.

8.2.2 Earth Pressure Calculations

For yielding walls, lateral earth pressures can be computed assuming active conditions and wedge theory, using a planar surface of sliding defined by the Rankine theory. Table 8.1 provides soil properties for computing active earth pressures for five types of soil. Table 8.2 provides friction factors and adhesion for dissimilar materials. See Figs. 8.10 and 8.11 for the magnitude and location of resultant forces on retaining walls considering various types of soil backfill and backslide geometries. The pressures presented in these figures assume mobilization of the soil shear strength along the entire Rankine active failure plane, extending uninterrupted from the ground surface at the base of the wall or to the location on the wall at which the total earth load is being computed. Figure 8.11 shows the failure surface geometry and associated earth pressure distributions for various design conditions. If the soil behind the wall consists of more than one soil type, the design earth pressure should be determined using the weighted average of the properties of the soil types within and along the theoretical failure plane.

AASHTO provides that, for yielding walls, lateral earth pressures should be computed assuming active stress conditions and wedge theory using a planar surface of sliding defined by Coulomb theory. The computational procedures for active pressures are

www.EngineeringEBooksPdf.com

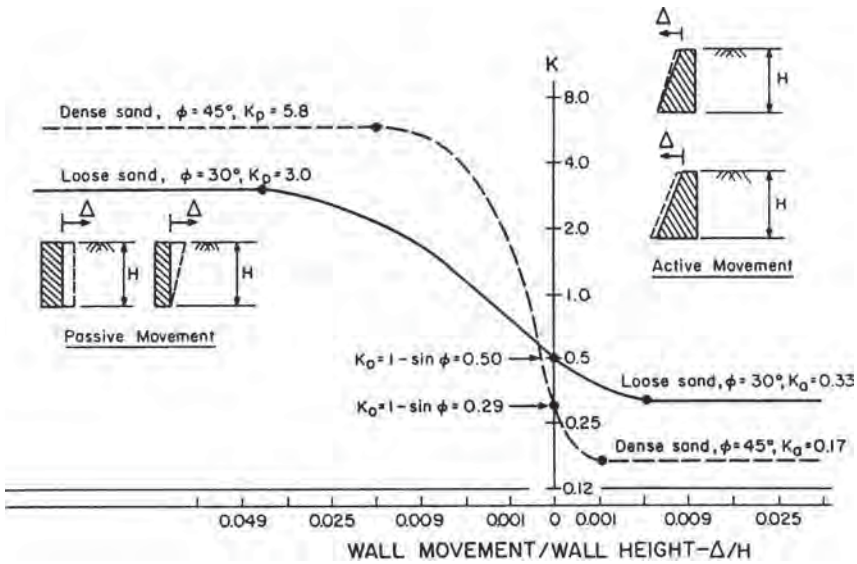

(a)

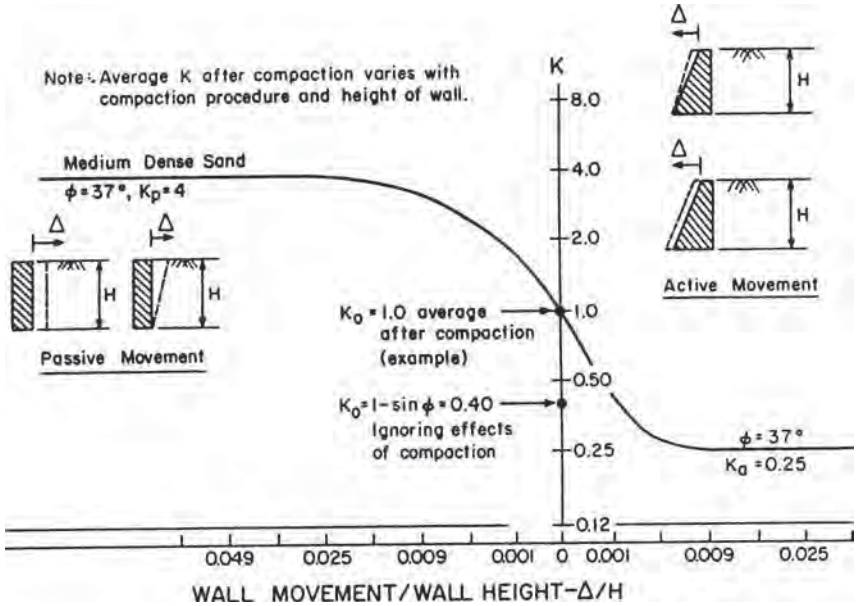

(b)

FIGURE 8.9 Relationship between wall movement and earth pressures. (*a*) Ideal cases where the backfill begins from at-rest pressures; (*b*) case for a sand backfill compacted to a medium-dense condition with no wall movement. (*From* Clough, G. W. and Duncan, J. M., "Earth Pressures," Chap. 6 in *Foundation Engineering Handbook*, Fang, H. Y., *Van Nostrand Reinhold, New York, 1991, with permission*)

www.EngineeringEBooksPdf.com

TABLE 8.1 Soil Properties for Rankine Active Earth Pressure Computation

Soil type number	Soil description	USCS symbol[a]	Unit horizontal soil pressure[b] k_h, lb/ft²/ft (kN/m³)	Rankine active earth pressure coefficient[b] K_a	Total soil unit weight γ, lb/ft³ (kN/m²/m)	Effective angle of friction ϕ', °
1	Sands and gravels with little or no fines	GW, GP, SW, SP (AASHTO A7)	30[c] (4.7)	0.25	120 (18.8)	37
2	Sands and gravels with some silt	GM-GP, GM-GW, SM-SP, SM-SW	35 (5.5)	0.29	120 (18.8)	33
3	Silty and clayey sands and gravels	GM, GC, SM, SC	45 (7.1)	0.45	100 (15.7)	22
4	NOC[d] to LOC[e] silts and clays	ML, MH, CL, CH	100 (15.7)	0.80	125 (19.6)	0[g]
5	HOC[f] clays which can become saturated	CL, CH	120 (18.8)	1.00	120 (18.8)	0[g]

[a]Unified Soil Classification System (see Fig. 8.14).

[b]At $\beta = 0°$, representing a horizontal backslope behind the wall. For a sloping backfill ($\beta > 0$), refer to Figs. 8.10 and 8.11. $k_h = K_a\gamma$.

[c]The minimum value of k_h for design should be 35 lb/ft³.

[d]Normally overconsolidated (OCR = 1).

[e]Lightly overconsolidated (OCR = 1 to 2).

[f]Heavily overconsolidated (OCR > 2).

[g]Undrained shear strength.

Source: From *Design Manual,* Part 4, Pennsylvania Department of Transportation, Harrisburg, Pa., with permission.

www.EngineeringEBooksPdf.com

TABLE 8.2 Ultimate Friction Factors and Adhesion for Dissimilar Materials

Interface materials	Friction factor, tan δ	Friction angle δ, °
Mass concrete on the following foundation materials:		
Clean sound rock	0.70	35
Clean gravel, gravel-sand mixtures, coarse sand	0.55–0.60	29–31
Clean fine to medium sand, silty medium to coarse sand, silty or clayey gravel	0.45–0.55	24–29
Clean fine sand, silty or clayey fine to medium sand	0.35–0.45	19–24
Fine sandy silt, nonplastic silt	0.30–0.35	17–19
Very stiff and hard residual or preconsolidated clay	0.40–0.50	22–26
Medium stiff and stiff clay and silty clay	0.30–0.35	17–19
(Masonry on foundation materials has same friction factors.)		
Steel sheet piles against the following soils:		
Clean gravel, gravel-sand mixtures, well-graded rock fill with spalls	0.40	22
Clean sand, silty sand-gravel mixture, single-size hard rock fill	0.30	17
Silty sand, gravel or sand mixed with silt or clay	0.25	14
Fine sandy silt, nonplastic silt	0.20	11
Formed concrete or concrete sheet piling against the following soils:		
Clean gravel, gravel-sand mixture, well-graded rock fill with spalls	0.40–0.50	22–26
Clean sand, silty sand-gravel mixture, single-size hard rock fill	0.30–0.40	17–22
Silty sand, gravel or sand mixed with silt or clay	0.30	17
Fine sandy silt, nonplastic silt	0.25	14
Various structural materials:		
Masonry on masonry, igneous and metamorphic rocks:		
Dressed soft rock on dressed soft rock	0.70	35
Dressed hard rock on dressed soft rock	0.65	33
Dressed hard rock on dressed hard rock	0.55	29
Masonry on wood (cross grain)	0.50	26
Steel on steel at sheet pile interlocks	0.30	17

Interface materials*	Adhesion C_a, lb/ft^2	Adhesion C_a, kPa
Very soft cohesive soil (0–250 lb/ft^2) (0–12 kPa)	0–250	0–12
Soft cohesive soil (250–500 lb/ft^2) (12–24 kPa)	250–500	12–24
Medium stiff cohesive soil (500–1000 lb/ft^2) (24–48 kPa)	500–750	24–36
Stiff cohesive soil (1000–2000 lb/ft^2) (48–96 kPa)	750–950	36–45
Very stiff cohesive soil (2000–4000 lb/ft^2) (96–192 kPa)	950–1300	45–62

*Cohesion values are shown in parentheses.

Source: From *Design Manual,* Part 4, Pennsylvania Department of Transportation, Harrisburg, Pa., with permission.

www.EngineeringEBooksPdf.com

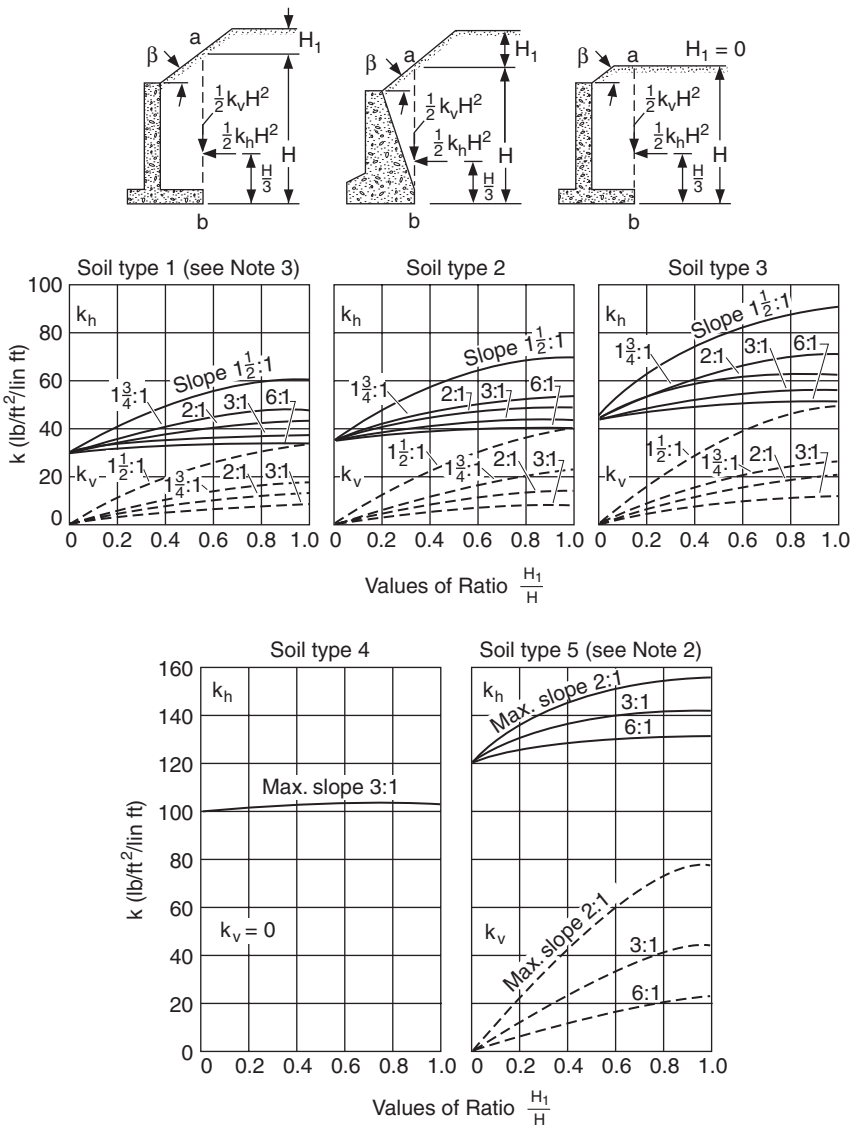

FIGURE 8.10 Charts for estimating Rankine active earth pressures against retaining walls supporting sloped ground of limited height. *Notes:* (1) Soil types shown on curves correspond to soil types described in Table 8.1. (2) For soil type 5, computations of soil pressure may be based on a value of H 4 ft (1.2 m) less than the actual value. (3) The minimum value of k_h for design should be 35 lb/ft^2/lin ft (5.50 kN/m^2/m). (4) Add pressures due to water and surcharge (including 2 ft minimum soil surcharge) to the active earth pressures from these charts. (*From* Design Manual, *Part 4, Pennsylvania Department of Transportation, Harrisburg, Pa., with permission*)

www.EngineeringEBooksPdf.com

DESIGN CONDITION	FAILURE SURFACE GEOMETRY	HORIZONTAL EARTH PRESSURE DISTRIBUTION
Design of stem and evaluation of stability for wall in front of rock face	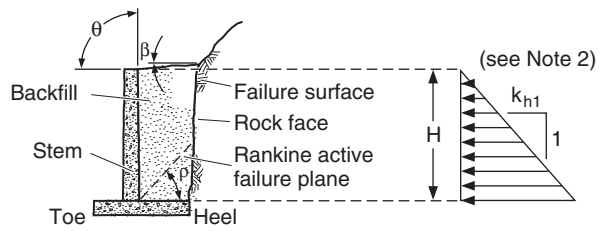	
Design of stem for wall in soil	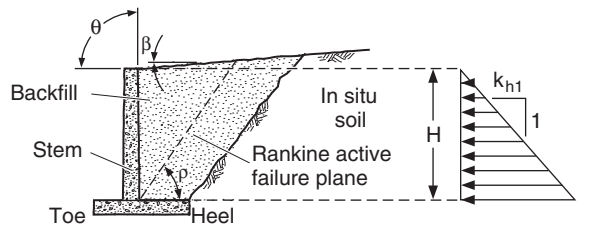	
Evaluation of stability for wall in soil	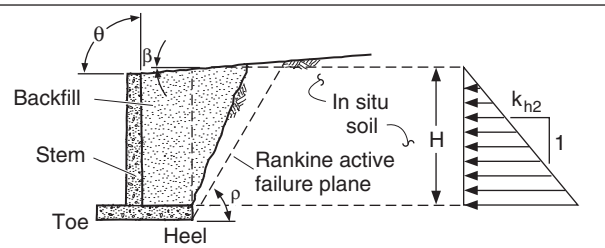	

LEGEND

k_{h1} = unit horizontal soil pressure due to backfill

k_{h2} = unit horizontal soil pressure due to in situ soil

ρ = angle between Rankine active failure plane and horizontal

ϕ' = weighted average effective stress angle of internal friction along failure plane

$$\rho = \tan^{-1}\left(\tan\phi' + \sqrt{1 + \tan^2\phi' - \frac{\tan\beta}{\sin\phi'\cos\phi'}}\right)$$

NOTES

(1) Obtain values of k_{h1}, k_{h2}, and vertical component of soil pressure.

(2) The earth pressure resultant for this condition can be more accurately determined by Culmann's graphical construction.

(3) Add pressures due to water and surcharge (including 2-ft minimum soil surcharge).

FIGURE 8.11 Assumed failure surfaces and horizontal earth pressure distributions. (*From* Design Manual, *Part 4, Pennsylvania Department of Transportation, Harrisburg, Pa., with permission*)

www.EngineeringEBooksPdf.com

given below. An alternative to the computation for active pressures using the Coulomb theory for yielding walls and for cohesionless soils is to define the lateral pressures utilizing the Rankine theory.

The above procedures for developing the design pressures on yielding walls are based on the following assumptions:

1. The backfill soils are compacted with lightweight hand-compaction equipment.
2. The soil within the theoretical failure zone is made up entirely of the backfill soil.
3. No point or line loads act on the backfill surface.
4. The retaining wall deflections are consistent with the deflections required to develop the design active earth pressure.

8.2.3 Example of Active Pressure Calculations

The active pressure coefficient K_a is given by Coulomb theory as

$$K_a = \frac{\sin^2(\theta + \phi')}{\sin^2\theta \sin(\theta - \delta)\left[1 + \sqrt{\dfrac{\sin(\phi' + \delta)\sin(\phi' - \beta)}{\sin(\theta - \delta)\sin(\theta + \beta)}}\right]^2} \tag{8.2}$$

where θ = angle of slope of back wall to horizontal, degrees
ϕ' = effective angle of internal friction, degrees
δ = angle of wall friction, degrees
β = angle of back slope, degrees

Refer to Figure 8.12 for the force diagram. The resultant horizontal earth force is to be determined for a design case wherein the following assumptions apply:

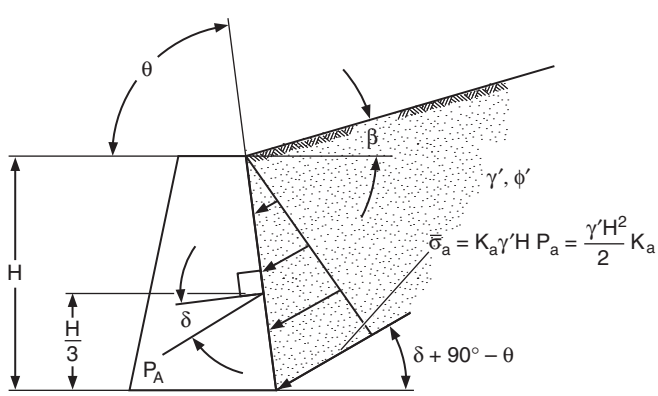

FIGURE 8.12 Forces for active pressure calculations. (*From* Design Manual, *Part 4, Pennsylvania Department of Transportation, Harrisburg, Pa., with permission*)

www.EngineeringEBooksPdf.com

Design assumptions

$$\phi' = 34°$$
$$\delta = 25°$$
$$\beta = 0°$$
$$\theta = 90°$$
$$\gamma' = 125 \text{ lb/ft}^3 \ (19.6 \text{ kN/m}^3)$$
$$H = \text{height of wall} = 20 \text{ ft } (6.1 \text{ m})$$
$$\text{Soil type} = 1 \text{ (see Table 8.1)}$$

Computations

$$\sin(\theta + \phi') = \sin(90° + 34°) = \sin 124° = 0.8290$$
$$\sin^2(\theta + \phi') = \sin^2(90° + 34°) = \sin^2 124° = 0.6873$$
$$\sin(\phi' + \delta) = \sin(34° + 25°) = \sin 59° = 0.8572$$
$$\sin(\phi' - \beta) = \sin(34° - 0°) = \sin 34° = 0.5592$$
$$\sin(\theta - \delta) = \sin(90° - 25°) = \sin 65° = 0.9063$$
$$\sin(\theta + \beta) = \sin(90° + 0°) = \sin 90° = 1.0000$$
$$\sin^2(\theta) = \sin^2(90) = 1.0000$$

$$K_a = \frac{0.6873}{130.9063\left[1 + \dfrac{0.8572 \times 0.5592}{0.9063 \times 1.00}\right]^2}$$

$$= \frac{0.6873}{2.7041} = 0.2542$$

k_a = horizontal active pressure = $K_a \delta' H = 0.2542(125)20$

= 635.5 lb/ft^2 (U.S. Customary units)

= 0.2542 (19.6) 6.1 = 30.4 kPa (SI units)

P_a = force resultant due to horizontal active pressure

$$= \frac{\gamma' H^2 K_a}{2} = \frac{125(20)^2(0.2542)}{2} = 6355 \text{ lb/ft (U.S. Customary units)}$$

$$= \frac{19.6\,(6.1)^2\,(0.2542)}{2} = 92.7 \text{ kN/m (SI units)}$$

www.EngineeringEBooksPdf.com

Alternate calculation. Figure 8.10 gives the horizontal and vertical components of active earth pressure, k_h and k_v, for the five soil types listed in Table 8.1. The pressures are given in terms of the ratio H_1/H, when H_1 is the surcharge height and H is the height of the fill from the base, both as defined by the sketches in Fig. 8.10.

From Fig. 8.10, soil is type 1, $H_1/H = 0$, $k_h = 30$ lb/ft^2/ft. Use 35 lb/ft^2/ft (5.50 kN/m^2/m), per note 3, Fig. 8.10.

$$P_a = \tfrac{1}{2}k_h H^2 = \tfrac{1}{2} \times 35(20)^2 = 7000 \text{ lb/ft (U.S. Customary units)}$$
$$= \tfrac{1}{2} \times 5.50(6.1)^2 = 102 \text{ kN/m (SI units)}$$

8.3 FOUNDATION INVESTIGATIONS AND SOILS ANALYSIS

8.3.1 General Considerations

Since the stability and safety of a structure—more specifically, retaining wall structures—depend upon the proper performance of the foundation, it is important that an adequate foundation investigation be made. The purpose of the investigation is to provide the designer with information concerning the engineering properties of the subsurface conditions. Generally, a retaining wall extends for a considerable length. Accordingly, the amount and type of foundation investigation that should be made and/or which the owner can afford must be considered. The owner must understand that once an exploration crew is dispatched to the site of a proposed wall, the investigation should be sufficiently complete to allow for the selection of an appropriate wall type.

When a rigid concrete retaining wall is to be used, the designer must consider that such a wall can tolerate only minimal differential settlement. If differential settlement is predicted, the designer may have to accommodate this situation by vertical joints in the wall and other systems of articulation in the wall. In many instances, this type of wall, under situations where differential or excessive settlement is anticipated, will require deep foundations such as caissons or piling driven to firm supporting material. Alternatively, subexcavation and replacement of poor material at the base of the wall may be appropriate. When a mechanically stabilized wall is selected under conditions of poor foundation soils, the wall is more tolerant to such a foundation condition. It is important for the owner to realize that while the wall is more tolerant to this condition, the end result as viewed from the finished top surface of the wall may be decidedly different. Therefore, it is important for the owner to set out the requirements of, and acceptance criteria for, the wall prior to the selection process. All alternative wall types evaluated should meet those criteria. Otherwise, the owner is not evaluating equal alternatives.

Subsurface Exploration Plan. Retaining walls are often viewed as subsidiary structures not worthy of any substantial expenditure for subsurface exploration. To the contrary, retaining walls can be costly structures. Further, the ultimate cost of most walls is quite sensitive to the foundation material.

The subsurface exploration plan can include obtaining subsurface data through the use of geophysical methods, such as seismic and electrical resistivity methods. More often the subsurface exploration effort is a simple and traditional boring program.

The boring program can be a simple auger drilling program with an experienced geologist classifying the soil on the basis of the auger cuttings. Clearly, if a physical examination of the type, nature, and characteristics of the subsurface materials is

www.EngineeringEBooksPdf.com

desired, samples will be necessary. The samples can be disturbed or undisturbed. The disturbed sample is generally taken in cohesionless soils and is used for classification and for moisture determination and compaction tests. More commonly, such samples may be taken by driving a heavy walled sampler into a clean hole. The size of the sampler or spoon varies from 2 in (50 mm) O.D. to 4½ in (112 mm) O.D. When a standard penetration test (SPT) is required, the sample is obtained by driving a 2-in (50 mm) O.D. by 1⅜-in (34 mm) I.D. sampler.

Where it is necessary to evaluate the structural properties of the subsurface material in its natural condition, an undisturbed sample is taken. This type of sample will produce a core sample that can be used for such laboratory tests as the triaxial shear, unconfined compression, and consolidation tests. This type of sample is more frequently taken in cohesive soils that contain little or no granular materials. It is often taken with thin-walled tube samplers (Shelby type).

The SPT results may be used to describe soil density and clayey soil consistency as shown in the following table:

Granular soil		Clay	
Blows	Density	Blows	Consistency
0–4	Very loose	0–1	Very soft
5–10	Loose	2–4	Soft
11–24	Medium dense	5–8	Medium stiff
25–50	Dense	9–15	Stiff
Over 50	Very dense	16–30	Very stiff
		31–60	Hard
		Over 60	Very hard

The blows are for the test procedures given in AASHTO Test Designation T-206.

Whenever rock is encountered, core drilling is done to advance the boring and to sample the rock in order to determine the profile and nature of the underlying rock strata. A general method by which the quality of the rock at a site is related to the amount of fracturing and alteration is known as the *rock quality designation* (*RQD*). The procedure consists of summing the total length of core recovered by counting only those pieces of hard and sound core that are 4 in or greater in depth. The ratio of this modified core recovery length to the total core run is the RQD. Rock quality is related to the RQD as follows:

Rock quality designation (RQD)	**Rock quality**
0–25	Very poor
25–50	Poor
50–75	Fair
75–90	Good
90–100	Excellent

Soil Properties. Soils include matter in three states: solid, liquid, and gas. Figure 8.13 shows a diagram of a soil block and presents the fundamental weight-volume relationships among the terms. The following sample problem illustrates application to a soil sample. Refer to Fig. 8.13 for nomenclature.

www.EngineeringEBooksPdf.com

Soil block	Volumes	Weights
Gas (air)	V_g	$W_g = 0$
Water	V_W	$W_W = V_W\gamma_w$
Solids	V_S	$W_S = V_S\gamma_S G_S$

$V = V_V + V_S$ = total volume $\quad V_V = V_g + V_W$ = volume of voids
W = total weight $= V\gamma$
$V/V_V = V_V/V_V + V_S/V_V$ or $1/n = 1 + 1/e$ and $n = e/(1 - n)$
$e = V_V/V_S$ = void ratio $\quad n = V_V/V$ = porosity
where G_S = specific gravity of soil
γ_w = unit weight of water
γ_S = unit weight of solids
γ = unit weight of soil

FIGURE 8.13 Weight-volume relationships for soils.

- Data:

  Clay sample with water content of 31.2 percent by weight.

  Specific gravity of soil particles is 2.80.

  Sample is 98 percent saturated.

- Determine void ratio e and soil unit weight γ; assume 1 cm^3 of solids for calculations; $V_s = 1.00$ cm^3:

$$V_w/V = 0.98$$

$$W_s = 2.80 \times 1 \text{ g/cm}^3 = 2.80 \text{ g}$$

$$W_w = 0.312 \times 2.80 = 0.874 \text{ g}$$

$$W = W_s + W_w = 2.80 + 0.874 = 3.674 \text{ g}$$

$$V_w = W_w/\gamma_w = 0.874 \text{ g}/(1 \text{ g/cm}^3) = 0.874 \text{ cm}^3$$

$$V_v = V_w/0.98 = 0.874/0.98 = 0.892 \text{ cm}^3$$

$$V_g = V_v - V_w = 0.892 - 0.874 = 0.018 \text{ cm}^3$$

$$V = V_s + V_v = 1.00 + 0.892 = 1.892 \text{ cm}^3$$

$$e = V_v/V_s = 0.892/1.00 = 0.892$$

$$\gamma = W/V = 3.674/1.892 = 1.94 \text{ g/cm}^3$$

8.3.2 Soils Analysis

Retaining wall design engineers not fully trained in soil mechanics need to be acquainted with certain basic principles, in order to understand the data developed by the geotechnical engineer or geologist responsible for the subsurface exploration. Soil is a nonhomogeneous earthen material that varies laterally and vertically in mineral context, grain size, density, grain shape, moisture content, strength, consistency, and compressibility. For the design of retaining walls and other structure-type foundations, the engineering properties of the soil must be evaluated. Such an evaluation will

www.EngineeringEBooksPdf.com

FIELD IDENTIFICATION PROCEDURES (excluding particles larger than 3 in. and basing fractions on est. weights)					GROUP[1] SYMBOLS	TYPICAL NAMES	INFORMATION REQUIRED FOR DESCRIBING SOILS	LABORATORY CLASSIFICATION CRITERIA	
COURSE-GRAINED SOILS More than half of material is *larger* than No. 200 sieve size[2]. (The No. 200 sieve size is about the smallest particle visible to the naked eye.)	**GRAVELS** More than half of coarse fraction is *larger* than No. 4 sieve size.	**CLEAN GRAVELS** (Little or no fines)	Wide range in grain size and substantial amounts of all intermediate particle sizes.		GW	Well-graded gravels, gravel-sand mixtures, little or no fines.	Give typical name; indicate approximate percentages of sand and gravel, max. size; angularity, surface condition, and hardness of the coarse grains; local or geologic name and other pertinent descriptive information, and symbol in parentheses. For undisturbed soils add information on stratification, degree of compactness, cementation, moisture conditions and drainage characteristics. EXAMPLE: *Silty sand*, gravelly; about 20% hard, angular gravel particles 1/2 in. max. size rounded and subangular sand grains coarse to fine; about 15% non-plastic fines with low dry strength; well compacted and moist in place; alluvial sand; (SM).	Determine percentages of gravel and sand from grain size curve. Depending on percentage of fines (fraction smaller than No. 200 sieve size), coarse-grained soils are classified as follows: Less than 5%.....GW, GP, SW, SP; More than 12%.....GM, GC, SM, SC; 5% to 12%.....*Borderline* cases requiring use of dual symbols. Use grain size curve in identifying the fractions as given under field identification.	$C_u = D_{60}/D_{10}$ greater than 4; $C_g = (D_{30})^2/D_{10}$ D_{60} between 1 and 3
			Predominantly one size or a range of sizes with some intermediate sizes missing.		GP	Poorly graded gravels, gravel-sand mixtures, little or no fines.			Not meeting all gradation requirements for GW.
		GRAVELS WITH FINES (Appreciable amount of fines)	Non-plastic fines (for identification procedures see ML below).		GM	Silty gravels, poorly graded gravel-sand-silt mixtures.			Atterberg limits below "A" line, or PI less than 7. — Above "A" line with PI between 4 and 7 are *borderline* cases requiring use of dual symbols.
			Plastic fines (for identification procedures see CL below).		GC	Clayey gravels, poorly graded gravel-sand-clay mixtures.			Atterberg limits above "A" line with PI greater than 7.
	SANDS More than half of coarse fraction is *smaller* than No. 4 sieve size. (For visual classifications, the 1/4" size may be used as equivalent to the No. 4 sieve size.)	**CLEAN SANDS** (Little or no fines)	Wide range in grain sizes and substantial amounts of all intermediate particle sizes.		SW	Well-graded sands, gravelly sands; little or no fines.			$C_u = D_{60}/D_{10}$ greater than 6; $C_g = (D_{30})^2/D_{10}$ D_{60} between 1 and 3
			Predominantly one size or a range of sizes with some intermediate sizes missing.		SP	Poorly graded sands, gravelly sands; little or no fines.			Not meeting all gradation requirements for SW.
		SANDS WITH FINES (Appreciable amount of fines)	Non-plastic fines (for identification procedures see ML below).		SM	Silty sands, poorly graded sand-silt mixtures.			Atterberg limits below "A" line, or PI greater than 7. — Above "A" line with PI between 4 and 7 are *borderline* cases requiring use of dual symbols.
			Plastic fines (for identification procedures see CL below).		SC	Clayey sands, poorly graded sand-clay mixture.			Atterberg limits above "A" line with PI greater than 7.
FINE-GRAINED SOILS More than half of material is *smaller* than No. 200 sieve size. (The No. 200 sieve size is about the smallest particle visible to the naked eye.)	Identification procedures on fraction smaller than No. 40 sieve size		**DRY STRENGTH** (crushing characteristics)	**DILANTANCY** (reaction to shaking)	**TOUGHNESS** (consistency near plastic limit)				
	SILTS and CLAYS Liquid limit less than 50		None to slight	Quick to slow	None	ML	Inorganic silts and very fine sands, rock flour, silty or clayey fine sands with slight plasticity.	Give typical name; indicate degree and character of plasticity, amount and max. size of coarse grains; color in wet condition, odor if any, local or geologic name, and other pertinent descriptive information; and symbol in parentheses. For undisturbed soils add information on structure, stratification, consistency in undisturbed and remolded states, moisture and drainage condition. EXAMPLE: *Clayey silt*, brown; slightly plastic; small percentage of fine sand; numerous vertical root holes; firm and dry in place; loss; (ML).	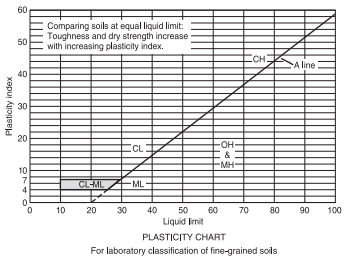 PLASTICITY CHART For laboratory classification of fine-grained soils
			Medium to high	None to very slow	Medium	CL	Inorganic clays of low to medium plasticity, gravelly clays, sandy clays, silty clays, lean clays.		
			Slight to medium	Slow	Slight	OL	Organic silts and organic silt-clays of low plasticity.		
	SILTS and CLAYS Liquid limit greater than 50		Slight to medium	Slow to none	Slight to medium	MH	Inorganic silts, micaceous or diatomaceous fine sandy or silty soils, elastic silts.		
			High to very high	None	High	CH	Inorganic clays of high plasticity, fat clays.		
			Medium to high	None to very slow	Slight to medium	OH	Organic clays of medium to high plasticity.		
HIGHLY ORGANIC SOILS			Readily identified by color, odor, spongy feel, and frequently by fibrous texture.			PT	Peat and other high organic soils.		

1. **Boundary classifications:** Soils possessing characteristics of two groups are designated by combinations of group symbols; *for example:* GW-GC, well-graded gravel-sand mixture with clay binder.
2. All sieve sizes on this chart are U.S. standard.

UNIFIED SOIL CLASSIFICATION CHART

FIGURE 8.14 Unified soil classification chart. (*Adopted by U.S. Army Corps of Engineers and Bureau of Reclamation, January 1952*)

www.EngineeringEBooksPdf.com

always require consideration of foundation soil classification, bearing capacity, and compressibility.

Soil Classification. Since the types of soils are so numerous and variable, a classification system is important. The Unified Soil Classification System (USCS) has been generally accepted by engineers. It is based upon the sizes of the particles, the distribution of the particle sizes, and the properties of the fine-grained portion. Only particle sizes of 3 in (75 mm) or less are included in the USCS. Materials greater in size are generally indicated in the log of borings as cobbles or boulders. Figure 8.14 shows the unified soil classification chart. The basic classifications include coarse-grained and fine-grained soils.

Coarse-Grained Soils. Coarse-grained soils are classified as either gravels or sands, dependent upon the fraction of the material retained on a no. 200 sieve. The classification threshold is 50 percent; i.e., if more than 50 percent of the fraction retained on a no. 200 sieve is retained on a no. 4 sieve, the soil is classified a gravel. If more than 50 percent passes the no. 4 sieve, the soil is classified a sand. There are many groupings of these coarse-grained soils, as indicated in the chart.

Fine-Grained Soils. Fine-grained soils are subdivided by plasticity and compressibility rather than by grain size. Fine-grained soils are classified as silt or clay, and as lowly or highly compressible. Criteria for classification are based upon the relationship between the liquid limit and the plasticity index. The relationship is given in the form of a plasticity chart shown by the inset in Fig. 8.14 and reproduced in Fig. 8.15. The "A" line on the chart divides clays from silts. Soils whose Atterberg limits plot above the line are clays, designated C; limits that plot below the line are silts, designated M.

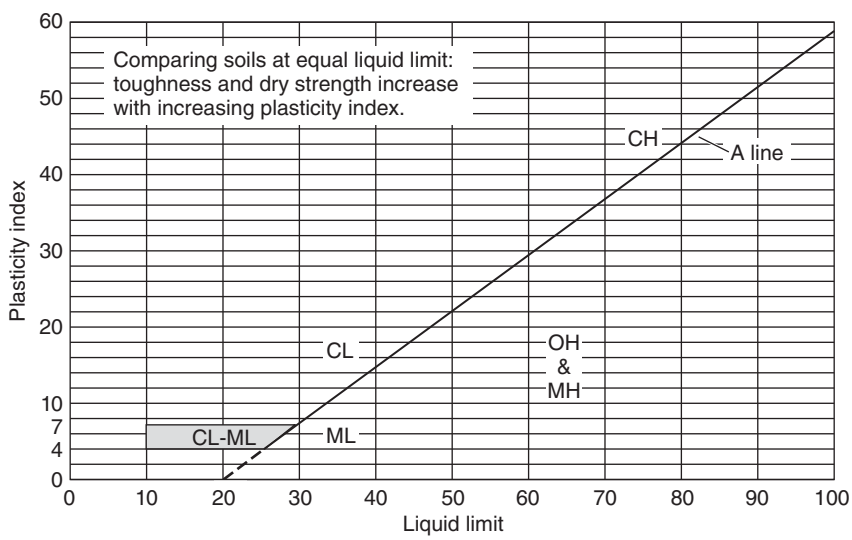

FIGURE 8.15 Plasticity chart for laboratory classification of fine-grained soils. (*Adopted by U.S. Army Corps of Engineers and U.S. Bureau of Reclamation, January 1952*)

www.EngineeringEBooksPdf.com

8.3.3 Bedrock

Bedrock is divided by geologists into three large groups, namely (1) igneous, (2) metamorphic, and (3) sedimentary. Igneous rocks are those that have resulted from the cooling and crystallization of molten masses of mineral matter and gases either at or below the earth's surface. Sedimentary rocks consist of the transported and subsequently indurated products of weathering of previously existing rock types, while metamorphic rocks are frequently defined as those having characteristic textures and mineral compositions that have resulted from high temperatures and pressures and/or hot mineralizing solutions acting on a parent rock. Figures 8.16, 8.17, and 8.18 indicate easily recognizable descriptions for field classification of igneous, metamorphic, and sedimentary rock, respectively.

8.3.4 Soils Laboratory Tests

Grain size, shape, and gradation are generally established by sieve analysis. For the finer clays, a hydrometer analysis is necessary. Figure 8.19 depicts a classification of sediment based on grain size.

Atterberg limit tests are performed on fine-grained soils and represent the amount of water present in the voids. The liquid limit (LL), plastic limit (PL), and plasticity index (PI) constitute the Atterberg limits.

FIELD CLASSIFICATION OF IGNEOUS ROCKS				
ROCK TEXTURE	ROCK COLOR AND ESSENTIAL MINERALS			
	Light gray, white, or pink contains orthoclase and quartz	Dark gray or black contains plagioclase, hornblende, and/or biotite	Dark gray or black contains plagioclase and pyroxene	Black or green contains augite and/or olivene and/or hornblende
Granular or (course-grained)	Granite	Diorite	Gabbro	Peridotite
Porphyritic and aphanitic (coarse and fine)	Rhyolite	Andesite	Basalt	
Aphanitic (fine-grained)	Felsite (light-colored)		Basalt (dark-colored)	
Glassy (amorphous)	Obsidian (black)	Pitchstone (red or brown)	Pumice (a glass froth)	

FIGURE 8.16 Field classification of igneous rock. *Note:* Consolidated volcanic ash is called *tuff* if no large fragments are present. If large fragments are present, it is called *breccia.* (*From C. H. Harned,* Some Practical Aspects of Foundation Studies for Highway Bridges, *U.S. Bureau of Public Roads, January 1959*)

www.EngineeringEBooksPdf.com

FIELD CLASSIFICATION OF METAMORPHIC ROCKS	
NONFOLIATED (no parallel alignment of minerals)	FOLIATED (parallel alignment of minerals)
Quartzite conglomerate (from conglomerate) Quartzite (from sandstone) Marble (from limestone) Serpentine (from basic igneous rocks) Anthracite (from bituminous coal)	Gneiss (individual foliation planes are easily distinguishable with the naked eye) Schist (individual foliation planes are distinguishable with a hand lens) Slate (microfoliated)

ESSENTIAL MINERAL COMPOSITION OF THE COMMON METAMORPHIC ROCKS			
NONFOLIATED		FOLIATED	
ROCK	MINERALS	ROCK	MINERALS
Quartzite	Quartz	Gneiss	Quartz, feldspar, muscovite, biotite, pyroxenes, amphiboles
Marble	Calcite or dolomite	Schist	Garnet, staurolite, talc, muscovite, biotite, chlorite, epidote
Serpentine	Serpentine	Slate	Microscopic quartz, muscovite, biotite, chlorite
Coal	No minerals		
Note: The names of foliated rocks are frequently modified by designating the conspicuous minerals present, e.g., chlorite schist, talc schist, mica schist, staurolite schist.			

FIGURE 8.17 Field classification of metamorphic rock. (*From C. H. Harned,* Some Practical Aspects of Foundation Studies for Highway Bridges, *U.S. Bureau of Public Roads, January 1959*)

The *triaxial shear test* is used to find the shear strength of a soil for the determination of pile lengths and of bearing capacity for spread footings or drilled shafts. Triaxial shear test results are also needed to give soil parameters for the design of retaining walls. High-quality, undisturbed samples are required for triaxial shear tests. Poor samples should be discarded rather than tested, as they will give misleading results.

The *direct shear* test is sometimes performed in lieu of other shear tests, and the use of its results is the same as that noted above for the triaxial shear test. It is important to remember that direct shear test results are usually less reliable than those obtained from the triaxial shear test, since the failure line in the direct shear test is imposed by the method of testing, whereas the triaxial method allows the sample to fail in its weakest plane. On occasion, it is desirable to shear soil or rock along a particular plane. In these cases, a direct shear test may be used. High-quality, undisturbed samples are needed for this test.

www.EngineeringEBooksPdf.com

CLASTIC SEDIMENTARY ROCKS		
RESIDUAL AND /OR MECHANICAL SEDIMENT		
GRAIN SIZE	UNCONSOLIDATED SEDIMENT	CONSOLIDATED ROCK
Coarse	Boulders, cobbles, gravel, and coarse sand	Conglomerate (rounded particles) Breccia (angular particles) Sandstone (coarse)
Medium	Sand	Sandstone Arkose = +25% feldspar Graywacke = dark colored
Fine	Silt and clay	Siltstone and shale

NONCLASTIC SEDIMENTARY ROCKS	
CHEMICAL SEDIMENTS	ORGANIC SEDIMENTS
Gypsum Salt Dolomite Clauconite Some chert (flint) Some iron ores Some phosphate rock	Some limestone Some chert (flint) Some phosphate rock Peat Coal

Note: 1. The cementing agents for sedimentary rocks are calcite, quartz, limonite, hematite, and chalcedony. Clay minerals may also function as binder or semicementing material.

2. Compositional descriptive adjectives such as siliceous, argillaceous, arenaceous, calcareous, carbonaceous, ferrugenous, feldspathic, opaline, and cherty are frequently used.

3. Other descriptive adjectives such as massive, laminated, stratified, varved, cross-bedded, concretionary, and fissile are also used.

FIGURE 8.18 Field classification of sedimentary rock. (*From C. H. Harned,* Some Practical Aspects of Foundation Studies for Highway Bridges, *U.S. Bureau of Public Roads, January 1959*)

The *unconfined compression test* of a soil is a uniaxial compression test in which the test specimen is provided with no lateral support while undergoing vertical compression. The test measures the unconfined, compressive strength of a cylinder of cohesive or semicohesive soil, which, indirectly, may be indicative of the shearing strength. The test is usually performed on an undisturbed sample of soil at its natural moisture content. It may also be performed on a remolded sample to evaluate the effects of disturbance and remolding upon the shearing strength.

Unconfined compression tests are relatively quick to perform and relatively inexpensive. When used in conjunction with the triaxial test, the unconfined compression test is of value. Also, it is sometimes used as an index test because it is easy to conduct.

www.EngineeringEBooksPdf.com

SIZE RANGE (mm)	CLASS NAME
Over 256	Boulder
256–64	Cobble
64–4	Pebble
4–2	Granule
2–1	Very coarse sand
1–0.5	Coarse sand
0.5–0.25	Medium sand
0.25–0.125	Fine sand
0.125–0.0625	Very fine sand
0.0625–0.002	Silt
Less than 0.002	Clay

(a)

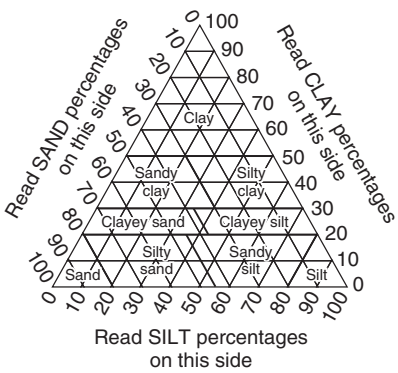

GROUPING USED IN TRIANGULAR CLASSIFICATION			
CLASS NAMES	PERCENT OF SIZES PRESENT		
	SAND	SILT	CLAY
Sand	80–100	0–20	0–20
Silty sand	45–80	0–55	0–20
Sandy silt	0–45	35–80	0–20
Silt	0–20	80–100	0–20
Clayey sand	38–80	0–42	20–30
Clayey silt	0–38	32–80	20–30
Sandy clay	30–70	0–40	30–50
Silty clay	0–30	20–70	30–50
Clay	0–50	0–50	50–100

If gravel is present in appreciable amounts, the term "gravelly" may be added to the class name, vis. "gravelly sand". The terms "coarse", "medium", and "fine", when used to describe gravel, sand, and silt, refer to standard grade size limits.

(b)

FIGURE 8.19 Classification of soil based on (*a*) grain size of sediment and (*b*) standard grain size limits. (*From C. H. Harned,* Some Practical Aspects of Foundation Studies for Highway Bridges, *U.S. Bureau of Public Roads, January 1959*)

8.3.5 Engineering Properties of Soils

The equation for shearing strength S (lb/ft^2 or kPa) of a soil may be taken as follows:

$$S = c + \sigma \tan \phi \tag{8.3}$$

where c = cohesion, lb/ft^2 (kPa)
σ = confining pressure or normal stress, lb/ft^2 (kPa)
ϕ = angle of internal friction of the soil, degrees

The shearing strength of the soil should account for the effect of pore water pressure when present. Equation (8.3) can be modified as:

$$S = c + (\sigma - u) \tan \phi \tag{8.4}$$

where u = pore water pressure, lb/ft^2 (kPa)

www.EngineeringEBooksPdf.com

Soil consolidation is produced by load and is associated with changes in soil moisture. It is also a function of time. The time required for drainage to occur, which results from the change in soil moisture, is a function of the permeability of the soil and the distance the water must travel in the material to be released. It is clear that consolidation of coarse-grained materials will occur fairly rapidly. This explains the often used assumption that consolidation of such materials under applied load, for example, the load of a retaining wall, generally occurs during the construction of the wall. Thus, long-term settlement is not normally considered to occur. On the contrary, clays and/or silts are relatively impermeable, so that long-term settlement should be anticipated in the design. The designer must consider various options to accommodate this projected long-term settlement. For example, the designer may (1) require preloading to effect the settlement before the wall is constructed, (2) accelerate the consolidation by drilling for and placing sand drains, and (3) decide to build the structure with pile or caisson support systems that are independent of the consolidation.

8.4 RIGID RETAINING WALLS

8.4.1 General Criteria

Rigid retaining walls are those that develop lateral resistance primarily from their own weight. Figure 8.20 shows the terms used in the design of this type of wall. On the basis of their overall cross-sections, those walls may be referred to as L walls or T walls. (See insets, Fig. 8.3.)

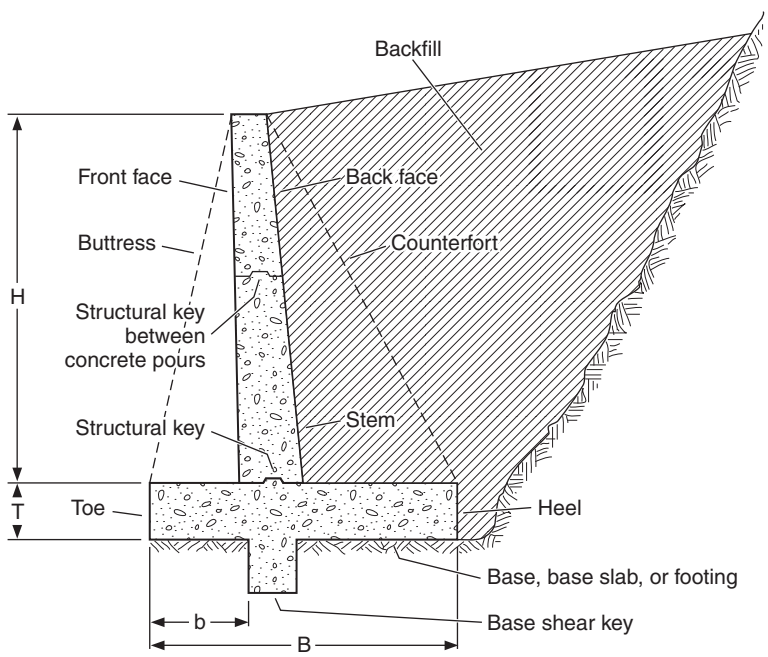

FIGURE 8.20 Terminology for rigid retaining walls. (*From* Design Manual, *Part 4, Pennsylvania Department of Transportation, Harrisburg, Pa., with permission*)

www.EngineeringEBooksPdf.com

Examples of rigid structures typically include concrete gravity walls, thick concrete slurry walls, and gabion walls. Additionally, some Reinforced Earth walls, if designed to be reinforced in such a way that limited lateral movement will occur, can also be categorized as rigid walls. In fact, a wall may have considerable flexibility in its vertical dimension and nevertheless be classified and designed as a "rigid" wall system. Requirements for resistance of these wall types include sliding stability, overturning, bearing pressure evaluation, and settlement considerations. Design criteria for rigid retaining walls are summarized in Fig. 8.21. Overall, or global, stability is an important consideration in that, while the wall itself may adequately retain a soil mass, the soil mass may be unstable because, for example, of a deep-seated failure plane. This type of consideration is evaluated by *slip circle analysis*.

8.4.2 Sliding Stability

To provide adequate resistance against sliding, the base of the wall should be at least 3 ft below ground surface in front and below the depth of frost action, depth of seasonal volume change, and depth of scour. Sliding stability should be adequate without including passive pressure at the toe. If insufficient sliding resistance is available, the designer may increase base width, provide a pile foundation, or lower the base of the wall and consider passive resistance below frost depth. If the wall is supported on rock or very stiff clay, a key may be installed below the foundation to provide additional resistance to sliding. Considerations of the need for the 3-ft depth when dealing with Reinforced Earth walls should be evaluated in that such walls are not as susceptible to frost action as more rigid concrete walls. In any event, it is recommended that some nominal depth below ground line be provided to accommodate changes in natural terrain over the anticipated life of the structure, often 75 to 100 years. Such changes occur as a result of normal soil erosion caused by wind, rainfall, and other natural processes. Of course, in situations where scour may occur, hydrologic and hydraulic evaluations of scour depth must be made.

8.4.3 Settlement and Overturning

For walls on relatively incompressible foundations, apply the overturning criteria of Fig. 8.21. If the foundation is compressible, compute settlement by available methods previously referred to and estimate tilt of a rigid wall from the settlement. If the consequent tilt is anticipated to exceed acceptable limits, proportion the wall to keep the resultant force at the middle third of the base. If a wall settles so that the resulting movement forces it into the soil it supports, then the lateral pressure on the active side increases substantially. Table 8.3 shows the magnitudes of wall rotation required to mobilize active and passive earth pressures for different types of soil.

8.4.4 Overall Stability on Weak Soils

Where retaining walls are underlain by weak soils, the overall stability of the soil mass containing the retaining wall should be checked with respect to the most critical surface of sliding. A minimum safety factor of 2.0 is desirable but may not always be achievable. A technique known as *slip circle analysis* can be used to check for global stability. Refer to standard texts on soils engineering.

www.EngineeringEBooksPdf.com

Type of wall	Load diagram	Design factors
Gravity	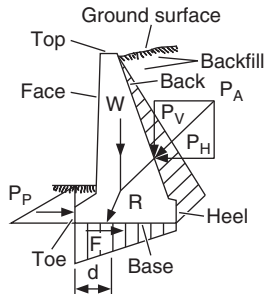	**LOCATION OF RESULTANT** Moments about toe: $d = \frac{W_a + P_V e - P_H b}{W + P_V}$ Assuming $P_P = 0$ **OVERTURNING (GRAVITY AND SEMIGRAVITY)** Moments about toe: $F_S = \frac{W_a}{P_H b - P_V e} \geqq 1.5$ Ignore overturning if R is within middle third (soil), middle half (rock). Check R at different horizontal planes for gravity walls. **RESISTANCE AGAINST SLIDING** $F_S = \frac{(W + P_V)\ \text{TAN}\ \delta + C_a B}{P_H} \geqq 1.5$ $F_S = \frac{(W + P_V)\ \text{TAN}\ \delta + C_a B + P_P}{P_H} \geqq 2.0$ $F_S = (W + P_V)\ \text{TAN}\ \delta + C_a B$ For coefficients of friction between base and soil see Table 8.2. C_a = Adhesion between soil and base TAN δ = Friction factor between soil and base W = Includes weight of wall and soil in front for gravity and semigravity walls. Includes weight of wall and soil above footing, for cantilever and counterfort walls.
Semigravity	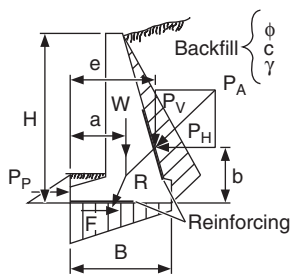	
Cantilever	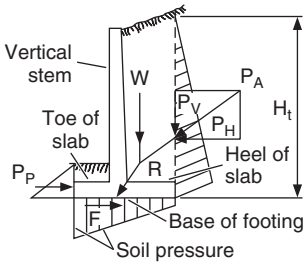	
Counterfort	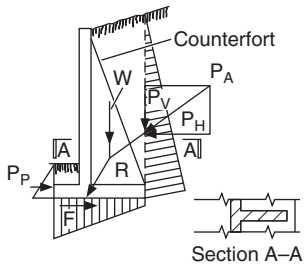	

FIGURE 8.21 Design criteria for rigid retaining walls. (*From* Design Manual, *Part 4, Pennsylvania Department of Transportation, Harrisburg, Pa., with permission*)

www.EngineeringEBooksPdf.com

TABLE 8.3 Relationship between Soil Backfill Type and Wall Rotation to Mobilize Active and Passive Earth Pressures behind Rigid Retaining Walls

	Wall rotation, Δ/H	
Soil type and condition	Active	Passive
Dense cohesionless	0.001	0.020
Loose cohesionless	0.004	0.060
Stiff cohesive	0.010	0.020
Soft cohesive	0.020	0.040

Source: From *Design Manual,* Part 4, Pennsylvania Department of Transportation, Harrisburg, Pa., with permission.

8.4.5 Design Procedures for a Cantilever Retaining Wall

A typical cantilever retaining wall is illustrated by the insert sketch in Fig. 8.21. This rigid-type wall can be constructed with or without a base shear key (see Fig. 8.20) depending on an analysis for resistance to sliding, as discussed later.

The specifications of the owner will govern the selection and use of backfill materials behind retaining walls. In most cases, clean backfill materials having an internal friction angle of at least 34° are assumed in the design of retaining walls, subject to the following considerations:

1. With a proper drainage system and with backfilling controlled so that no compaction-induced lateral loads are applied to the wall, the above-noted or better material may be used in construction. A minimum lateral earth pressure of 30 (lb/ft^2)/ft (4.7 kN/m^3) (equivalent fluid weight) for level backfills, or 40 (lb/ft^2)/ft (6.3 kN/m^3) for 2:1 sloped fills, should be assumed.

2. Backfill is assumed as on-site inorganic material; however, if it is of a lower class designation, the wall must be designed for an equivalent fluid weight lateral pressure suitable for that class. Therefore, should the designer select a backfill material of lower classification, it will be necessary to clearly specify the backfill material by a supplemental project special provision and to use an appropriate equivalent fluid weight lateral pressure for design.

The design aids provided in Figs. 8.22 and 8.23 may be used for preliminary dimensions in the design of a cantilever cast-in-place retaining wall. On the basis of the Rankine theory of earth pressure, final design may proceed with the following steps:

1. Obtain soil parameters for both backfill and foundation. Usually the cohesionless backfill is slightly larger than Rankine zone. This enables the designer to use the properties of backfill material to estimate earth loads; otherwise the properties of retained material must be used.

2. Determine the appropriate design cases and load combinations. Load types are designated as follows: *D,* dead load; *E,* earth load; SC, surcharge; RI, rail impact; and *W,* wind load. Typical load combinations are as follows: sloped or leveled fill without rail, $D + E$; leveled fill without rail, $D + E +$ SC; leveled fill with rail, $D + E +$ RI; and leveled fill with rail and fence, $D + E +$ SC $+ W$.

3. Determine the overall design height including footing thickness T and stem height H, and select a trial footing width dimension B. (See Fig. 8.20.) Usually the toe

www.EngineeringEBooksPdf.com

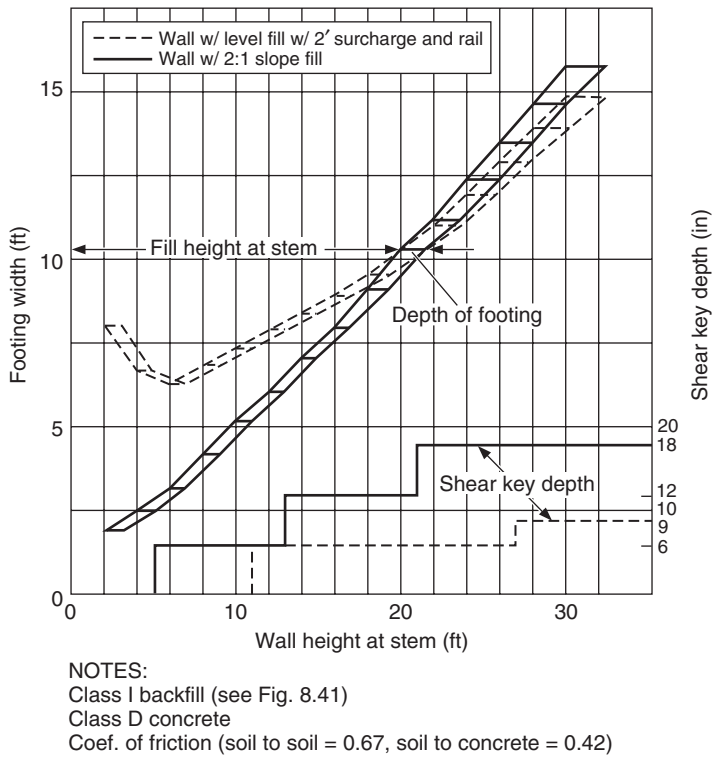

FIGURE 8.22 Aid for preliminary design of cast-in-place concrete retaining walls showing wall and footing dimensions. (*From* Bridge Design Manual, *Section 5, Colorado Department of Transportation, Denver, Colo., with permission*)

width b is approximately one-third to one-half of B. The ratio of footing width to overall height should be in the range from 0.4 to 0.8 for T-shaped walls as shown by the design aids in Figs. 8.22 and 8.23. In these preliminaries, wide-base L-shaped walls (footing width to height ratios larger than 0.8) are used for low wall heights (less than 10 ft or 3 m), and the factor of safety with respect to overturning is relaxed from a minimum of 2.0 to 1.5 when considering the case of $D + E +$ RI.

4. Draw a vertical line from the back face of the footing to the top of the fill. This line serves as the boundary of the free body to which the earth pressure is applied. The applied active earth pressure can be estimated by Rankine theory, and the direction assumed parallel to the backfill surface. Compute the resultant P of the applied earth pressure and associated loads. Resolve P into horizontal and vertical components P_h and P_v, and apply at one-third the total height H_t of the imaginary boundary from the bottom of the footing. (See Fig. 8.21.)

5. Take a free body of the stem and compute the loads applied at the top of the stem as well as loads along the stem (height H), and find the moment and shear envelope to meet all the design cases at several points along the height. The working stress design method and the concept of shear friction can be used to calculate the shear strength at the joint between footing and stem.

www.EngineeringEBooksPdf.com

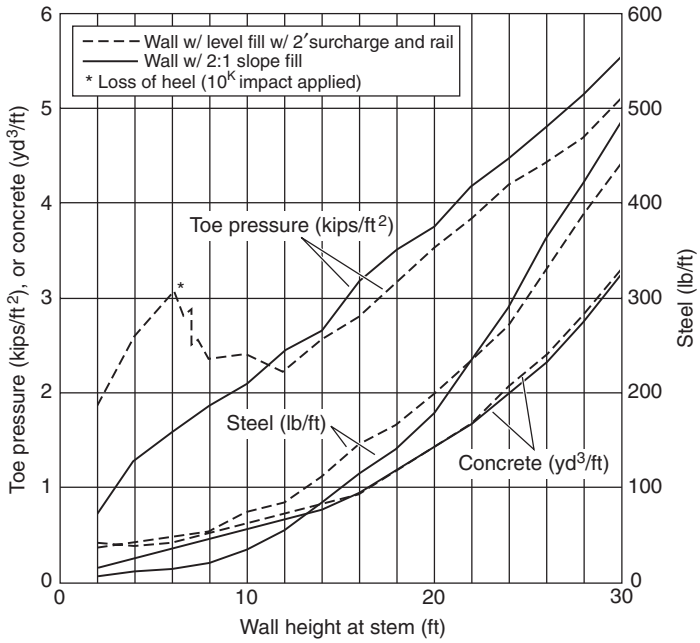

NOTES:
Class I backfill (see Fig. 8.41)
Class D concrete
Coef. of friction (soil to soil = 0.67, soil to concrete = 0.42)

FIGURE 8.23 Aid for preliminary design of cast-in-place concrete retaining walls showing toe pressure and steel and concrete quantities. (*From* Bridge Design Manual, *Section 5, Colorado Department of Transportation, Denver, Colo., with permission*)

6. Calculate the weight *W,* which is the sum of the weight of concrete and the weight of soil bounded by the back of the concrete wall and the vertical line defined by step 4 above. Find the distance from the extremity of the toe to the line of action of *W,* which is the stabilizing moment arm *a.*

7. Calculate the overturning moment M_o applied to the wall free body with respect to the tip of the toe as:

$$M_o = P_h\left(\frac{H_t}{3}\right) \tag{8.5}$$

Calculate the resisting moment M_r with respect to the tip of the toe as:

$$M_r = Wa + P_v B \tag{8.6}$$

The safety factor SF against overturning is

$$\text{SF (overturning)} = \frac{M_r}{M_o} = \frac{Wa + P_v B}{P_h H_t/3} \tag{8.7}$$

www.EngineeringEBooksPdf.com

The required safety factor (overturning) should be equal to or greater than 2.0 unless otherwise accepted and documented by the engineer (see step 3).

8. Compute the eccentricity e of the applied load with respect to the center of the footing based on the net moment:

$$e = \frac{B}{2} \times \frac{M_r - M_o}{W} \tag{8.8}$$

The resultant should be within the middle third of the footing width; i.e., the absolute value of e should be less than or equal to $B/6$ to avoid tensile action at the heel.

9. The toe pressure q can be evaluated and checked by the following equation:

$$q = \frac{W}{B}\left[1 + 6\left(\frac{e}{B}\right)\right] \tag{8.9}$$

The toe pressure must be equal to or less than the allowable bearing capacity based on the soils report. Toe pressure is most effectively reduced by increasing the toe dimension.

10. The footing, both toe and heel, can be designed by working strength design. Soil reactions act upward and superimposed loads act downward. The heel design loads should include the portion of the vertical component P_v of earth pressure that is applied to the heel. For the toe design loads and stability, the weight of the overburden should not be used if this soil could potentially be displaced at some time during the life of the wall.

11. Check the factor of safety against sliding without using a shear key. The coefficient of friction between soil and concrete is approximately tan ($\frac{2}{3}\phi$), where ϕ is the internal friction angle of the soil in radians. Neglect the passive soil resistance in front of the toe. The sliding resistance SR can be evaluated as:

$$\text{SR} = (W + P_v) \tan\left(\frac{2}{3}\phi\right) \tag{8.10}$$

The SF (sliding), which is SR/P_h, should be equal to or greater than 1.5. If SF (sliding) is less than 1.5, then either the width of the footing should be increased or a shear key should be installed at the bottom of the footing.

If a shear key is the choice, the depth of the inert block d_c is computed by the sum of the key depth KD and the assumed effective wedge depth, which is approximately half the distance between the toe and the front face of the shear key ($b/2$). Using the inert block concept, knowing the equivalent fluid weight (γ_p) of passive soil pressure, and neglecting the top 1 ft (300 mm) of the toe overburden T_o, the toe passive resistance P_p is

$$P_p = 0.5\gamma_p[(T_o + T + d_c - 1)^2 - (T_o + T - 1)^2] \tag{8.11}$$

Total sliding resistance F from friction is the sum of the horizontal component of the resistance from toe to shear key and the resistance from shear key to heel. Therefore:

$$F = [\cos^2 (\tfrac{2}{3}\phi)\, R_1 \tan \phi] + R_2 \tan (\tfrac{2}{3}\phi) \tag{8.12}$$

www.EngineeringEBooksPdf.com

where ϕ = internal friction angle of base soil
R_1 = soil upward reaction between toe and key, lb/ft (kN/m)
R_2 = soil upward reaction between key and heel, lb/ft (kN/m)

Sliding resistance is

$$SR = F + P_p \tag{8.13}$$

The SF (sliding), which is SR/P_h, should be equal to or greater than 1.5.

12. Repeat steps 3 through 11 as appropriate until all design requirements are satisfied.

Figure 8.24 represents typical values for equivalent fluid pressures of soils. These values are suggested for use in the absence of a more detailed determination.

Structural backfill class designation	Type of soil (compaction conforms with AASHTO 90–95% T180)	Condition	Typical values for equivalent fluid unit weight of soils, lb/ft^{3a,b,c} (kN/m^3) Level backfill	2:1 (*H*:*V*) backfill
Class I[d]: borrowed, selected, coarse-grained soils	Loose sand or gravel	(Active)	40	50 (6.3/7.9)
		(At rest)	55	65 (8.6/10)
	Medium dense sand or gravel	(Active)	35	45 (5.5/7.1)
		(At rest)	50	60 (6.3/9.4)
	Dense[e] sand or gravel, 95% T180	(Active)	30	40 (4.7/6.3)
		(At rest)	45	55 (7.1/8.6)
Class IIA[f]: on-site, inorganic, coarse-grained soils, low percentage of fines	Compacted, clayed, sand gravel	(Active)	40	50 (6.3/7.9)
		(At rest)	60	70 (9.4/11)
	Compacted, clayed, silty gravel	(Active)	45	55 (7.1/8.6)
		(At rest)	70	80 (11/13)
Class IIB: on-site, inorganic LL < 50%	Compacted, silty/sandy gravelly, low/medium plasticity lean clay	Site-specific material, use with special attention; see geotechnical engineer. Soils report on workmanship of compaction, drainage design, and waterstop membrane is required.		
Class IIC: on-site, inorganic LL > 50%	Fat clay, elastic silt that can become saturated	Not recommended		

[a] At rest, pressure should be used for earth that does not deflect or move.
[b] Active pressure state is defined by movement at the top of wall of 1/240 of the wall height.
[c] The effect of additional earth pressure that may be induced by compaction or water should be added to that of earth pressure.
[d] Class I: 30 percent or more retained on no. 4 sieve and 80 percent or more retained on no. 200 sieve.
[e] Dense: No less than 95 percent density per AASHTO T180.
[f] Class IIA: 50 percent or more retained on no. 200 sieve.

FIGURE 8.24 Typical values for equivalent fluid pressure for soils. (*From* Bridge Design Manual, *Section 5, Colorado Department of Transportation, Denver, Colo., with permission*)

www.EngineeringEBooksPdf.com

8.5 MECHANICALLY STABILIZED EARTH WALLS

8.5.1 Types of MSE Walls

Mechanically stabilized earth (MSE) walls are made up of several elements—specifically, the reinforcement of a soil mass through the use of steel strips, steel or polymeric grids, or geotextile sheets, capable of withstanding tensile forces, and a facing material. Figure 8.25 depicts different types of geosynthetic reinforced walls. The walls depicted range from a sloping geotextile wrapped face, usually used for the more temporary

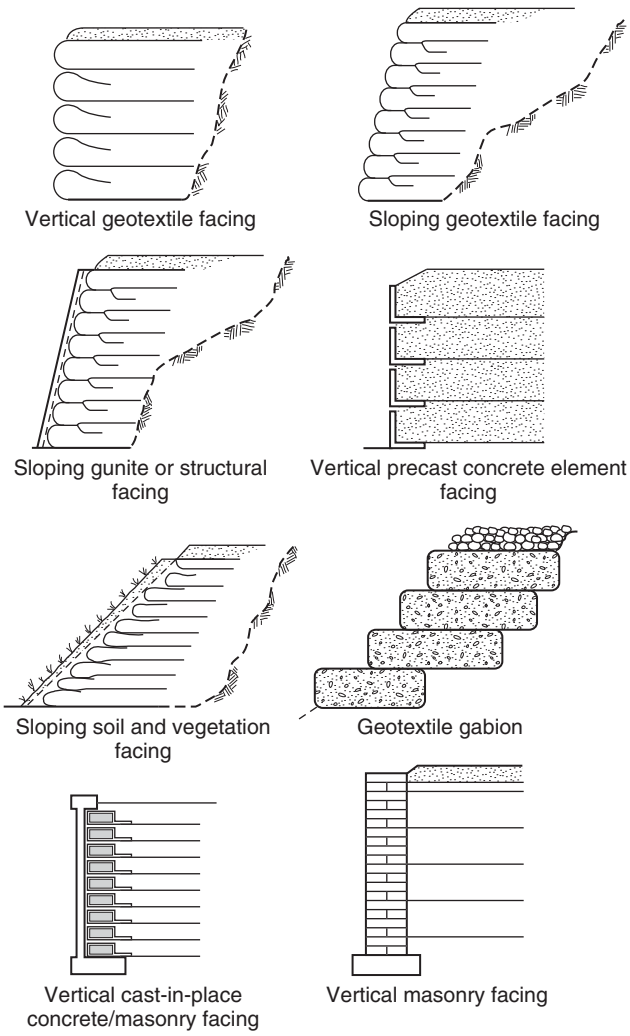

FIGURE 8.25 Facings for geotextile-reinforced walls.

www.EngineeringEBooksPdf.com

conditions, to stabilized soil masses faced with more long-term cast-in-place concrete or masonry block facings.

The advantages of MSE walls over the more conventional reinforced concrete walls include

1. Inherent flexibility to accommodate reasonable differential settlements
2. Lower total cost
3. Less construction time
4. Inherent capability to provide drainage to avoid buildup of hydrostatic forces

The reinforcement elements are characterized as extensible or inextensible. Extensible reinforcements can deform without rupture to develop deformations greater than can the soil in which they are placed. Such reinforcements include polymeric geotextiles and geogrids. Inextensible reinforcements cannot deform to deformations greater than the soil they reinforce. Metallic-strip or grid reinforcements are included in this category.

A summary of the available MSE systems in terms of the reinforcement and facing panel details is included in Table 8.4. The summary includes the major proprietary systems available. Figure 8.26 includes data regarding the geometries and some mechanical properties of the different reinforcement types available for use in MSE walls with geotextile reinforcements.

Reinforced Earth was invented by Henri Vidal, who first published results of his studies in 1963. After a brief period of skepticism, the first significant projects were constructed in 1967. The use of Reinforced Earth then spread rapidly, and by the early 1970s many significant projects were in place in several countries. These included the 23-m-high Peyronnet wall on the Nice-Menton Highway and the coal and ore loading facility at the port of Dunkirk, in France; the major retaining walls built along California Route 39 and along Interstate 70 through Vail Pass in the Colorado Rocky Mountains, in the United States; the Henri Bourassa Interchange in Quebec City, Canada; the several retaining walls on the Bilbao-Behobia Expressway in Spain; and the 11-km-long wall built on the St. Denis coastal road on Reunion Island in the Indian Ocean. Subsequently, Reinforced Earth has been accepted by civil engineers in all of the world's industrialized nations, and its uses have been greatly diversified. Predominant applications are highway and railway retaining walls and bridge abutments.

As indicated in Table 8.4, several other systems have been used since the introduction of Reinforced Earth. The Hilfiker retaining wall, which uses welded wire reinforcement and facing, was developed in the mid-1970s, and the first experimental wall was built in 1975 to confirm its feasibility. The first commercial use was on a wall built for the Southern California Edison Power Company in 1977 for repair of roads along a power line in the San Gabriel Mountains. In 1980, the use of welded wire wall expanded to larger projects, and, over the years, numerous walls have been completed in the United States.

Hilfiker also developed the Reinforced Soil Embankment (RSE) system, which uses continuous welded wire reinforcement and a precast-concrete facing system. The first experimental Reinforced Soil Embankment system was constructed in 1982. The first use of RSE on a commercial project was in 1983, on State Highway 475 near the Hyde Park ski area northeast of Santa Fe, New Mexico. At that site, four reinforced soil structures were constructed totaling 17,400 ft^2 (1600 m^2) of wall face. Many additional RSE systems have been constructed since.

A system using strips of steel grid (or "bar mat") reinforcement, VSL Retained Earth, was first constructed in the United States in 1981 in Hayward, California. Since then, numerous VSL Retained Earth projects have been built in the United States.

www.EngineeringEBooksPdf.com

TABLE 8.4 Reinforcement and Face Panel Details for Several Reinforced Soil Systems Used in North America

System name	Reinforcement detail	Typical face panel detail*
Reinforced Earth (The Reinforced Earth Company, 1700 N. Moore St., Arlington, VA 22209-1960)	Galvanized ribbed steel strips, 0.16 in (4 mm) thick; 2 in (50 mm) wide. Epoxy-coated strips also available.	Facing panels are cruciform shaped precast concrete 4.9 ft × 4.9 ft × 5.5 in (1.5 m × 1.5 m × 14 cm). Half-size panels used at top and bottom.
VSL Retained Earth (VSL Corporation, 101 Albright Way, Los Gatos, CA 95030)	Rectangular grid of W11 or W20 plain steel bars, 24-in × 6-in (61-cm × 15-cm) grid. Each mesh may have 4, 5, or 6 longitudinal bars. Epoxy-coated meshes also available.	Precast concrete panel. Hexagon shaped, 59½ in high, 68⅜ in wide between apex points, 6.5 in thick (1.5 m × 1.75 m × 16.5 cm).
Mechanically stabilized embankment (Calif. Dept. of Transportation, Div. of Engineering Services, 5900 Folsom Blvd., P.O. Box 19128, Sacramento, CA 95819)	Rectangular grid, nine ⅜-in-diameter (9.5-mm) plain steel bars on 24-in × 6-in (61-cm × 15-cm) grid. Two bar mats per panel (connected to the panel at four points).	Precast concrete; rectangular 12.5 ft (3.81 m) long, 2 ft (61 cm) high, and 8 in (20 cm) thick.
Georgia stabilized embankment (Dept. of Transportation, State of Georgia, No. 2 Capitol Square, Atlanta, GA 30334-1002)	Rectangular grid of five ⅜-in-diameter (9.5-mm) plain steel bars on 24-in × 6-in (61-cm × 15-cm) grid, 4 bar mats per panel.	Precast concrete panel; rectangular 6 ft (1.83 m) wide, 4 ft (1.22 m) high with offsets for interlocking.
Hilfiker retaining wall (Hilfiker Retaining Walls, PO Drawer L, Eureka, CA 95501) and Lane retaining wall (Lane Enterprises, Inc., P.O. Box 345, Pulaski, PA 16143)	Welded wire mesh, 2-in × 6-in (5-cm × 15-cm) grid of W4.5 × W3.5 (0.24 in × 0.21 in diameter), W7 × W3.5 (0.3 in × 0.21 in), W9.5 × W4 (0.34 in × 0.23 in), and W12 × W5 (0.39 in × 0.25 in) in 8-ft-wide mats.	Welded wire mesh, wraparound with additional backing mat and 1.4-in (6.35-mm) wire screen at the soil face (with geotextile or shotcrete, if desired).
Reinforced Soil Embankment (The Hilfiker Company, 3900 Broadway, Eureka, CA 95501)	6-in × 24-in (15-cm × 61-cm) welded wire mesh: W9.5 × W20—0.34 to 0.505 in (8.8 to 12.8 mm) diameter.	Precast concrete unit 12 ft 6 in (3.8 m) long, 2 ft (61 cm) high. Cast-in-place concrete facing also used.
Tensar Geogrid system (The Tensar Corporation, 1210 Citizens Parkway, Morrow, GA 30260)	Nonmetallic polymeric grid mat made from high-density polyethylene or polypropylene.	Nonmetallic polymeric grid mat (wraparound of the soil reinforcement grid with shotcrete finish, if desired), precast concrete units.
Miragrid system (Mirafi, Inc., P.O. Box 240967, Charlotte, NC 28224)	Nonmetallic polymeric grid made of polyester multifilament yarns coated with latex acrylic.	Precast concrete units or grid wrap around soil.

(*Continued*)

www.EngineeringEBooksPdf.com

TABLE 8.4 Reinforcement and Face Panel Details for Several Reinforced Soil Systems Used in North America (*Continued*)

System name	Reinforcement detail	Typical face panel detail*
Maccaferri Terramesh system (Maccaferri Gabions, Inc., 43A Governor Lane Blvd., Williamsport, MD 21795)	Continuous sheets of galvanized double-twisted woven wire mesh with PVC coating.	Rock fill gabion baskets laced to reinforcement.
Geotextile reinforced system	Continuous sheets of geotextiles at various vertical spacings.	Continuous sheets of geotextiles wrapped around (with shotcrete or gunite facing). Others possible.

*Many other facing types are possible with any specific system.

Source: From J. K. Mitchell and B. R. Christopher, "North American Practice in Reinforced Soil Systems," *Proceedings, Specialty Conference on Design and Performance of Earth Retaining Structures,* Geotechnical Division, American Society of Civil Engineers, 1990, with permission.

The mechanically stabilized embankment, a bar mat system, was developed by the California Department of Transportation on the basis of its research studies starting in 1973 on Reinforced Earth walls. The first wall using this bar mat type of reinforcement system was built near Dunsmuir, California, about 2 years later. Here, two walls were built for the realignment and widening of highway I-5. Since then, California has built numerous reinforced soil walls of various types.

Another bar mat reinforcing system, the Georgia stabilized embankment system, was developed more recently by the Georgia Department of Transportation, and the first wall using its technology was built for abutments at the I-85 and I-285 interchange in southwest Atlanta. Many additional walls have been constructed using this system.

Polymeric geogrids for soil reinforcement were developed after 1980. The first use of geogrid in earth reinforcement started in 1981. Extensive marketing of geogrid products in the United States was started about 1983 by the Tensar Corporation. Since then, many projects have been constructed using this type of reinforcement.

The use of geotextiles in reinforced soil walls started after the beneficial effect of reinforcement with geotextiles was noticed in highway embankments over weak subgrades. The first geotextile reinforced wall was constructed in France in 1981, and the first structure of this type in the United States was constructed in 1974. Since about 1980, the use of geotextiles in reinforced soil has increased significantly.

8.5.2 Facing Systems

The types of facing elements used in the different reinforced soil systems control their aesthetics, since they are the only visible parts of the completed structure. A wide range of finishes and colors can be provided in the facing. In addition, the facing provides protection against backfill sloughing and erosion, and provides drainage paths. The type of facing influences settlement tolerances. In multianchored structures, the facing is a major structural element. Major facing types include the following:

1. *Segmental precast-concrete panels.* Examples of these are found in Reinforced Earth, the Georgia stabilized embankment system, the California mechanically stabilized embankment system, the VSL Retained Earth system, the Hilfiker

www.EngineeringEBooksPdf.com

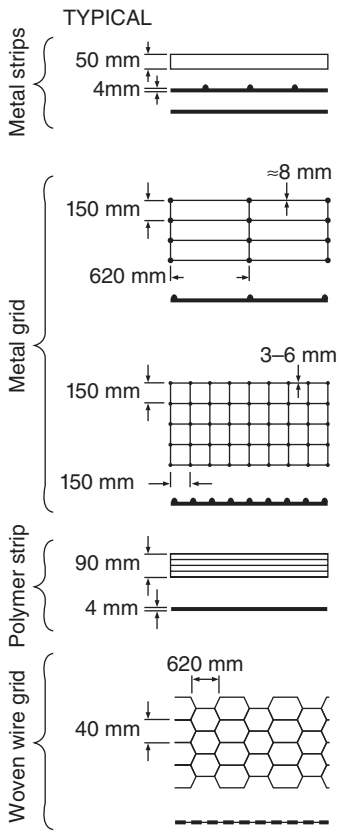

TYPE	TYPICAL MECHANICAL PROPERTIES		
	J MODULUS* (kN/m)	TENSILE† CAPACITY (kN/m)	STIFFNESS RATIO (S_V=0.6m) (kN/m/m)
Ribbed smooth	830,000	540	90,000
Bar mat (strip)	80,000–90,000	60	40,000–60,000
Welded wire mesh (continuous sheet)	10,000–40,000	10–30	17,000–67,000
	20,000	300	3,000
Woven wire mesh (continuous sheet)	2,000–10,000	20–30	3,000–16,000‡

J represents the modulus in terms of force per unit width of the reinforcement.

* $J = E(A_c/b)$ where: A_c = total cross section of reinforcement material
b = width of reinforcement
E = modulus of material

† Allowable values with no reduction for durability considerations

‡ Confined

FIGURE 8.26 Types of reinforcement and mechanical properties. (*From J. K. Mitchell and B. R. Christopher, "North American Practice in Reinforced Soil Systems,"* Proceedings, Specialty Conference on Design and Performance of Earth Retaining Structures, *Geotechnical Division, American Society of Civil Engineers, 1990, with permission*)

www.EngineeringEBooksPdf.com

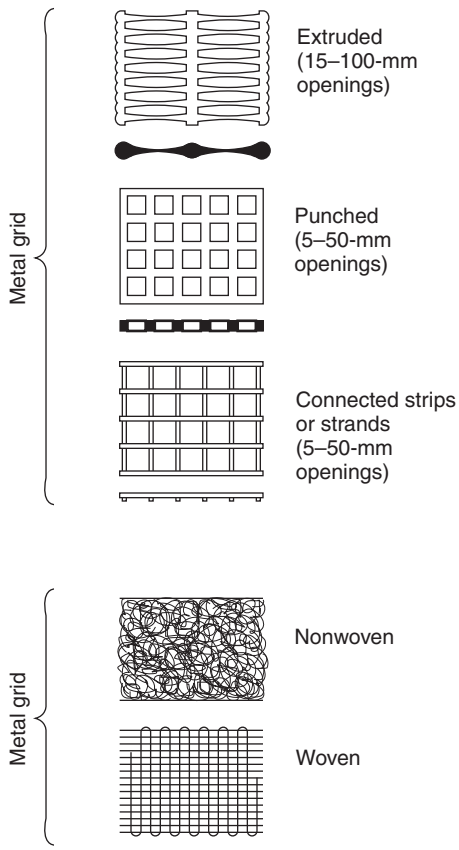

TYPE	MECHANICAL PROPERTIES		
	J MODULUS* (kN/m)	TENSILE† CAPACITY (kN/m)	STIFFNESS RATIO ($S_V = 0.6$m) (kN/m/m)
Extruded (15–100-mm openings)	75–2,000	5–50	125–3,000
Punched (5–50-mm openings)			
Connected strips or strands (5–50-mm openings)			
Nonwoven	2–800‡	2–25	3–1,300
Woven	75–10,000	5–40	125–17,000

FIGURE 8.26 (*Continued*)

Reinforced Soil Embankment, Tensar GeoWall, the American Geo-Tech system, the Stress Wall systems, the TRES system, the WEBSOL system, the Tensar system, and the York system of the Department of Environment, United Kingdom. (See Fig. 8.27.)

2. *Cast-in-place concrete, shotcrete, or full-height precast panels.* This type of facing is available in the Hilfiker and Tensar systems. Shotcrete is the most frequently used system for permanent soil nailed retaining structures. (See Fig. 8.28.)

3. *Metallic facings.* The original Reinforced Earth system had facing elements of galvanized steel sheet formed into half cylinders. Although precast concrete panels are now usually used in Reinforced Earth walls, metallic facings are still used in structures where difficult access or difficult handling requires lighter facing elements. Preformed metallic facings are also used in some soil nailing systems.

www.EngineeringEBooksPdf.com

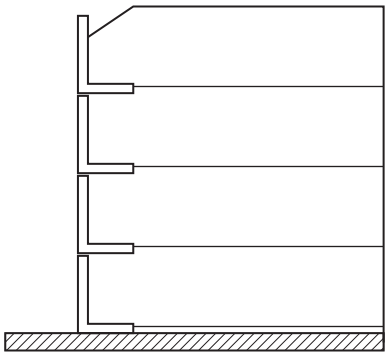

FIGURE 8.27 Sloping or vertical wall with reinforcement attached to precast-concrete facing elements.

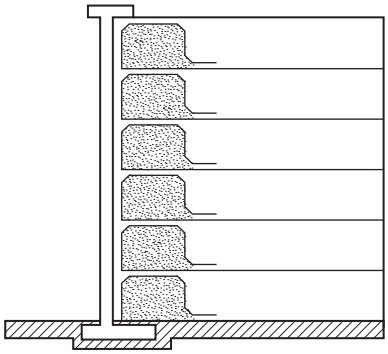

FIGURE 8.28 Vertical wall with cast-in-place concrete facing. Reinforcement is wrapped around fill used for drainage.

4. *Welded wire grids.* Wire grid can be bent up at the front of the wall to form the wall face. This type of facing is used in the Hilfiker and Tensar retaining wall systems. Welded wire grid facing is also commonly used with soil nailing in fragmented rocks or intermediate soils (chalk, marl, shales).

5. *Gabion facing.* Gabions (rock-filled wire baskets) can be used as facing with reinforcing strips consisting of welded wire mesh, welded bar mats, polymer geogrids, or the double-twisted woven mesh used for gabions placed between the gabion baskets.

6. *Fabric facing.* Various types of geotextile reinforcement are looped around at the facing to form the exposed face of the retaining wall. These faces are susceptible to ultraviolet light degradation, vandalism (e.g., target practice), and damage due to fire.

7. *Plastic grids.* A plastic grid used for the reinforcement of the soil can be looped around to form the face of the completed retaining structure in a similar manner to welded wire mesh and fabric facing. Vegetation can grow through the grid structure and can provide both ultraviolet light protection for the polymer and a pleasing appearance.

www.EngineeringEBooksPdf.com

8. *Postconstruction facing.* For wrapped faced walls, whether geotextiles, geogrids, or wire mesh, a facing can be attached after construction of the wall by shotcreting, guniting, or attaching prefabricated facing panels made of concrete, wood, or other materials. Shotcrete is the most frequently used system for permanent soil nailed retaining structures.

Precast elements can be cast in several shapes and provided with facing textures to match environmental requirements and to blend aesthetically into the environment. Retaining structures using precast-concrete elements as the facings can have surface finishes similar to any reinforced concrete structure. In addition, the use of separate panels provides the flexibility to absorb differential movements, both vertically and horizontally, without undesirable cracking, which could occur in a rigid structure.

Retaining structures with metal facings have the disadvantage of shorter life because of corrosion unless provision is made to compensate for it.

Facings using welded wire or gabions have the disadvantages of an uneven surface, exposed backfill materials, more tendency for erosion of the retained soil, possible shorter life from corrosion of the wires, and more susceptibility to vandalism. These can, of course, be countered by providing shotcrete or hanging facing panels on the exposed face and compensating for possible corrosion. The greatest advantages of such facings are low cost; ease of installation; design flexibility; good drainage (depending on the type of backfill), which provides increased stability; and possible treatment of the face for vegetative and other architectural effects. The facing can easily be adapted and well blended with the natural environment in the countryside. These facings, as well as geosynthetic wrapped facings, are especially advantageous for construction of temporary or other short-term design life structures.

8.5.3 Structure Dimensions

MSE walls should be dimensioned as required by AASHTO. The soil reinforcement length must be at least 70 percent of the wall height, as measured from the leveling pad, but not less than 8 ft (2.4 m) for both strip and grid type reinforcement. AASHTO requires the reinforcement length to be uniform throughout the entire height of the wall. The specification does allow deviation from this uniform length requirement, subject to the availability of substantiating evidence.

MSE walls must be designed for both external stability and internal stability. The recommended minimum factors of safety in various areas of external stability are noted in AASHTO as follows:

External stability	Factor of safety
Overturning	2.0 for footings on soil, ≥1.5 for footings on rock
Ultimate bearing capacity	≥2.5 for Group 1 loadings, ≥2.0 if justified by geotechnical analysis
Sliding	1.5
Overall stability (deep-seated failure)	≥1.5 for bridge abutment walls; ≥1.3 for walls with static loads; ≥1.1 for seismic loads
Seismic (overturning and sliding)	>75% static safety factor

In lieu of the overturning check, the eccentricity e of the force resultant R must be located such that $e \leq L/6$ where L is the base length (see Fig. 8.33). In calculating bearing

www.EngineeringEBooksPdf.com

capacity, bearing pressures should be calculated using the Meyerhof distribution, which considers a uniform base pressure distributed over an effective base width of $L - 2e$. Settlement should be investigated based on a geologic study.

In regard to internal stability, AASHTO notes the following:

Internal stability	Factor of safety
Pullout resistance	≥ 1.5
Rupture strength reinforcement	Allowable tension [see Eqs. (8.14*a*) and (8.14*b*)]
Durability	According to design life [see Eqs. (8.14*a*) and (8.14*b*)
Seismic stability	$>75\%$ static safety factor

Figures 8.29 and 8.30 indicate the two basic failure modes for internal stability analysis—specifically, rupture or creep failure of the reinforcement and a pullout failure mode. These failure modes suggest the use of the tied-back wedge analysis approach depicted in Fig. 8.31, which represents the basic method of analysis included in the AASHTO specifications.

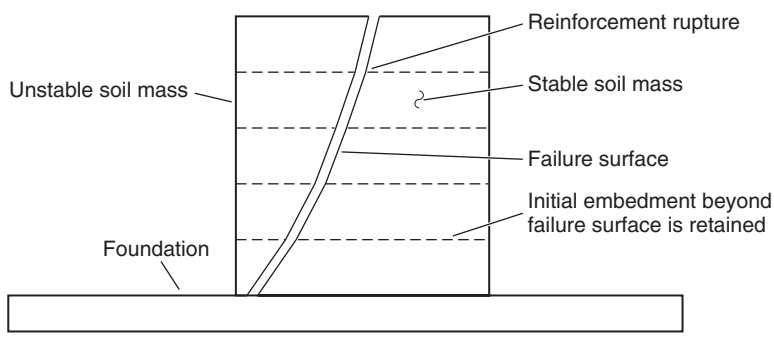

FIGURE 8.29 Reinforcement rupture or creep failure mode for internal stability evaluation.

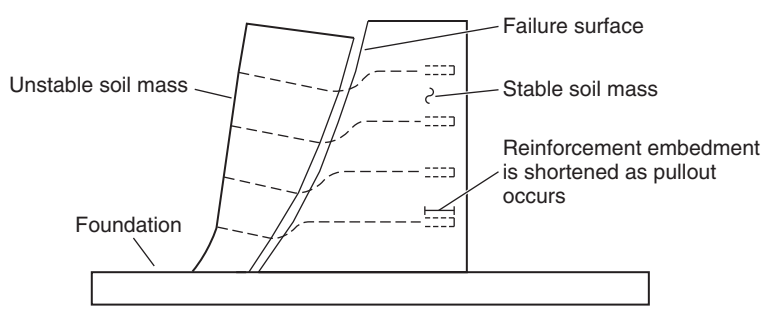

FIGURE 8.30 Reinforcement pullout failure mode for internal stability evaluation.

www.EngineeringEBooksPdf.com

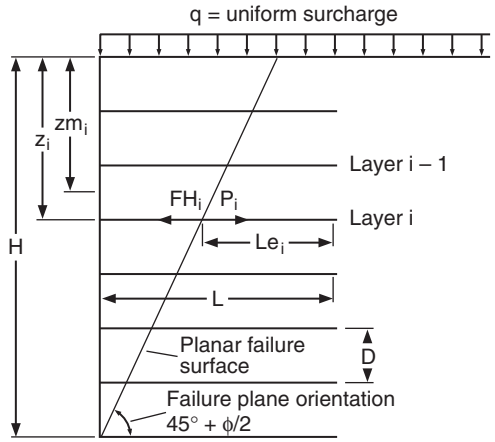

FIGURE 8.31 Parameters for tied-back wedge analysis.

8.5.4 Reinforced Fill Materials

Well-graded, free-draining granular material is usually specified for permanent-placed soil reinforced walls. Lower-quality materials are sometimes used in reinforced embankment slopes. Experience with cohesive backfills is limited. However, low strength, creep properties, and poor drainage characteristics make their use undesirable. Some current research is focused on the use of cohesive soil backfills.

The following gradation and plasticity limits have been established by the AASHTO-AGC-ARTBA* Joint Committee Task Force 27 for mechanically stabilized embankments:

U.S. sieve size	Percent passing
4 in (100 mm)	100
No. 40	0–60
No. 200	0–15
Plasticity index (PI) less than 6 percent	

It it recommended that the maximum particle size be limited to ¾ in (19 mm) for geosynthetics and epoxy-coated reinforcements unless tests show that there is minimal construction damage if larger particle sizes are used.

Metallurgical slag or cinders should not be used except as specifically allowed by the designer. Material should be furnished that exhibits an angle of internal friction of 34° or more, as determined by AASHTO T-236, on the portion finer than the No. 10 sieve. The backfill material should be compacted to 95 percent of AASHTO T-99, method C or D, at optimum moisture content. See Art. 8.5.7 for backfill requirements that are important in relation to the durability of the steel reinforcement.

On-site or local material of marginal quality can be used only with the discretion and approval of the designer.

*AGC, Associated General Contractors; ARTBA, American Road and Transportation Builders Association.

www.EngineeringEBooksPdf.com

8.5.5 Design Methodology for MSE Walls

Figure 8.32 shows the general design equations given by AASHTO for MSE walls with a horizontal backslope and a traffic surcharge. Included is the calculation of safety factors for overturning and sliding, and the maximum base pressure. Inclusion of a traffic surcharge is required only in those instances where traffic loadings will actually surcharge the wall. Separate surcharge diagrams are applied for the two conditions shown. For stability of the mass, the traffic surcharge should act at the end of the reinforced zone so as to eliminate the "stabilizing" effect of this loading. However, for purposes of determining horizontal stresses, which are increased as a result of this surcharge, the loading is

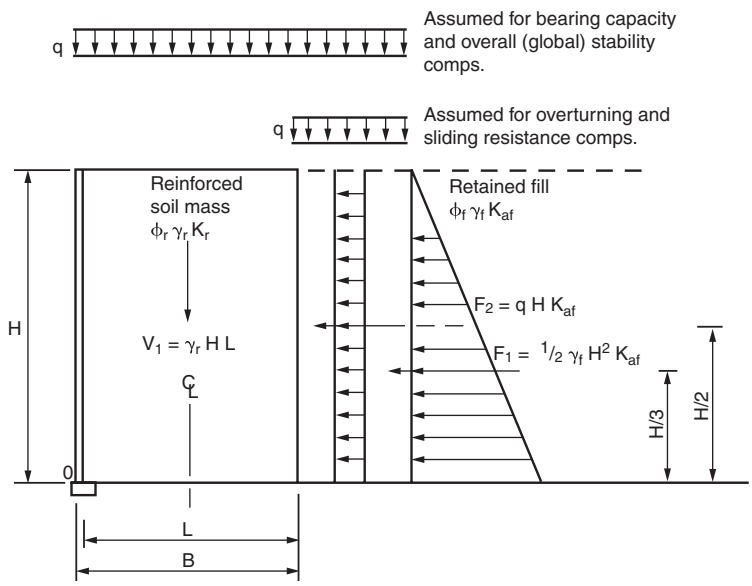

FACTOR OF SAFETY AGAINST OVERTURNING (MOMENTS ABOUT POINT 0):

$$FS_{OT} = \frac{\Sigma \text{ moments resisting } (M_r)}{\Sigma \text{ moments overturning } (M_o)} = \frac{V_1\,(L/2)}{F_1\,(H/3) + F_2\,(H/2)} \geq 2.0$$

FACTOR OF SAFETY AGAINST SLIDING:

$$FS_{SL} = \frac{\Sigma \text{ horizontal resisting force(s)}}{\Sigma \text{ horizontal driving force(s)}} = \frac{V_1\,(\tan\rho \text{ or } \tan\phi)^*}{F_1 + F_2} \geq 1.5$$

ϕ = friction angle of reinforced backfill or foundation, whichever is lowest

where q = traffic live load

*tan ρ is for continuous soil reinforcement (e.g., grids and sheets).
For discontinuous soil reinforcements (e.g., strips) use tan ϕ. ρ is the soil/reinforcement interface friction angle. Use the lower of tan ϕ at the base of the wall or tan ρ at the lowest reinforcement layer for continuous reinforcements.

Note: For relatively thick facing elements (e.g., segmental concrete facing blocks), it may be desirable to include the facing dimensions and weight in sliding and overturning calculations (i.e., use B in lieu of L).

FIGURE 8.32 General design requirements for MSE walls with horizontal backfill and traffic surcharge. (*From* Standard Specifications for Highway Bridges, *American Association of State Highway and Transportation Officials, Washington, D.C., 2002, with permission*)

www.EngineeringEBooksPdf.com

deemed to apply over the entire surface of the wall backfill. Figure 8.33*a* and *b* shows the AASHTO equations for the sloping backfill case and the broken backfill case.

While the conventional analysis of a mechanically stabilized earth wall assumes a rigid body, field evaluation has shown that the variation and magnitude of the foundation loading exerted by the wall on the underlying soil differ from the traditional trapezoidal

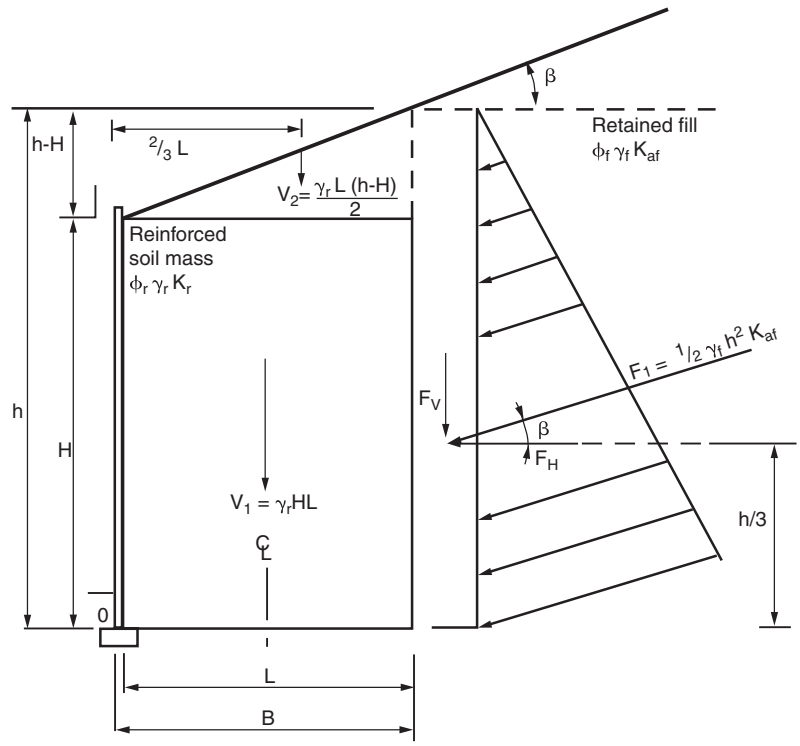

FACTOR OF SAFETY AGAINST OVERTURNING (MOMENTS ABOUT POINT 0):

$$FS_{OT} = \frac{\Sigma \text{ moments resisting } (M_r)}{\Sigma \text{ moments overturning } (M_o)} = \frac{V_1\,(L/2) + V_2\,(2L/3) + F_v\,(L)}{F_H\,(h/3)} \geq 2.0$$

FACTOR OF SAFETY AGAINST SLIDING:

$$FS_{SL} = \frac{\Sigma \text{ horizontal resisting force(s)}}{\Sigma \text{ horizontal driving force(s)}} = \frac{(V_1 + V_2 + F_v)\,(\tan \rho \text{ or } \tan \phi)^*}{F_H} \geq 1.5$$

ϕ = friction angle of reinforced backfill or foundation, whichever is lowest

*tan ρ is for continuous soil reinforcements (e.g., grids and sheets). For discontinuous soil reinforcements (e.g., strips) use tan ϕ. ρ is the soil/reinforcement interface friction angle. Use the lower of tan ϕ at the base of the wall or tan ρ at the lowest reinforcement layer for continuous reinforcements.
Note: For relatively thick facing elements (e.g., segmental concrete facing blocks), it may be desirable to include the facing dimensions and weight in sliding and overturning calculations (i.e., use B in lieu of L).

FIGURE 8.33*a* General design requirements for MSE walls with sloping backfill. (*From* Standard Specifications for Highway Bridges, *2002, American Association of State Highway and Transportation Officials, Washington, D.C., with permission*)

www.EngineeringEBooksPdf.com

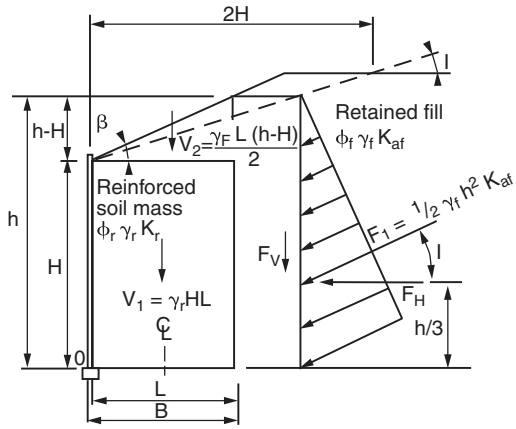

$F_H = F_T \cos(I)$

$F_V = F_T \cos(I)$

For infinite slope $I = \beta$

K_a for retained fill using $\delta = \beta = I$:

$$K_a = \frac{\sin^2(\theta + \phi')}{\sin^2\theta \sin(\theta + \delta)\left[1 + \sqrt{\frac{\sin(\phi' + \delta)\sin(\phi' - I)}{\sin(\theta - \delta)\sin(\theta + I)}}\right]^2}$$

FACTOR OF SAFETY AGAINST OVERTURNING (MOMENTS ABOUT POINT 0):

$$FS_{OT} = \frac{\Sigma \text{ moments resisting } (M_r)}{\Sigma \text{ moments overturning } (M_o)} = \frac{V_1 (L/2) + V_2 (2L/3) + F_v (L)}{F_H (h/3)} \geq 2.0$$

FACTOR OF SAFETY AGAINST SLIDING:

$$FS_{SL} = \frac{\Sigma \text{ horizontal resisting force(s)}}{\Sigma \text{ horizontal driving force(s)}} = \frac{(V_1 + V_2 + F_v)(\tan\rho \text{ or } \tan\phi)^*}{F_H} \geq 1.5$$

ϕ = friction angle of reinforced backfill or foundation, whichever is lowest

*tan ρ is for continuous soil reinforcements (e.g., grids and sheets). For discontinuous soil reinforcements (e.g., strips) use tan ϕ. ρ is the soil/reinforcement interface friction angle. Use the lower of tan ϕ at the base of the wall or tan ρ at the lowest reinforcement layer for continuous reinforcements.
Note: For relatively thick facing elements (e.g., segmental concrete facing blocks), it may be desirable to include the facing dimensions and weight in sliding and overturning calculations (i.e., use B in lieu of L).

FIGURE 8.33*b* General requirements for MSE walls with broken backfill. (*From* Standard Specifications for Highway Bridges, *2002, American Association of State Highway Officials, Washington, D.C., with permission*)

pressure distribution assumed under reinforced-concrete cantilever walls. Tests were performed by placing pressure cells under the base of an MSE wall. The wall was the Fremersdorf wall constructed in Germany, which is depicted in Fig. 8.34 along with the bearing pressure recorded from the pressure cells. Tests on that structure demonstrated that loading is greater toward the front of the structure because of earth pressure imposed

www.EngineeringEBooksPdf.com

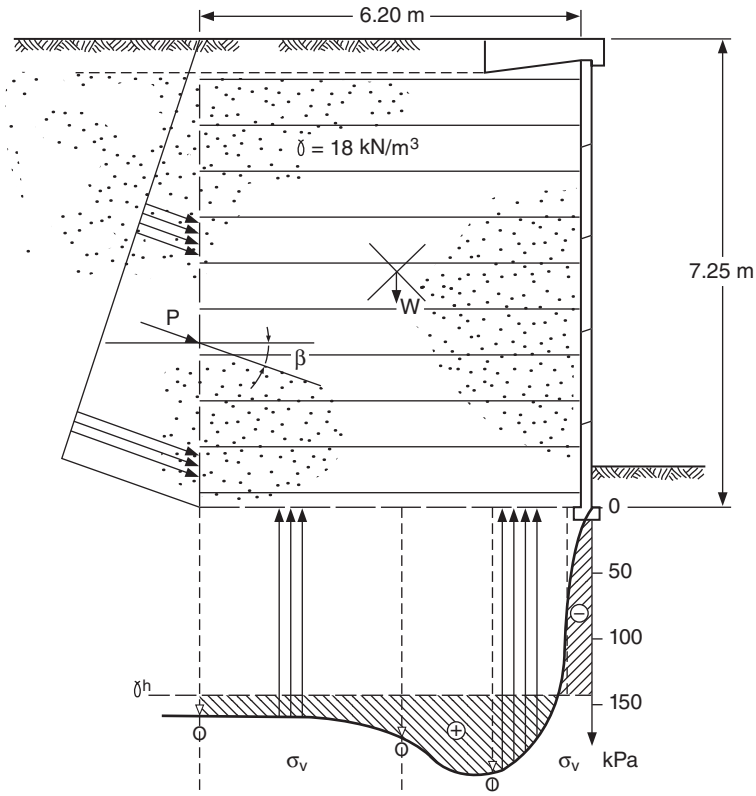

FIGURE 8.34 Fremersdorf MSE wall with foundation pressures from pressure cell readings. (*From the Reinforced Earth Co., with permission*)

by the retained fill behind the wall. In addition, the total load was slightly greater than the total weight of the wall, indicating that the thrust behind the structure was inclined. The difference between total loading and weight, and the location of the resultant, made it possible to compute the thrust angle β.

The bearing pressure distribution from the Fremersdorf wall is idealized in the AASHTO equation for soil pressure (σ_v) shown in Fig. 8.35. A uniform pressure (Meyerhof distribution) is calculated over a width equal to the length of the soil reinforcement elements minus 2 times the eccentricity of the vertical force.

8.5.6 Superimposed versus Terraced Structures

There are instances when one MSE wall is built on top of another. In certain instances, these walls can be considered to be two independent structures, each requiring its own internal design and external stability. The global stability of the slope must be sufficiently stable so as not to undermine the stability of the entire embankment.

Figure 8.36 shows a superimposed structure. The walls are such that the load of the upper wall level serves as a surcharge load on the lower wall. Each wall is independently designed.

www.EngineeringEBooksPdf.com

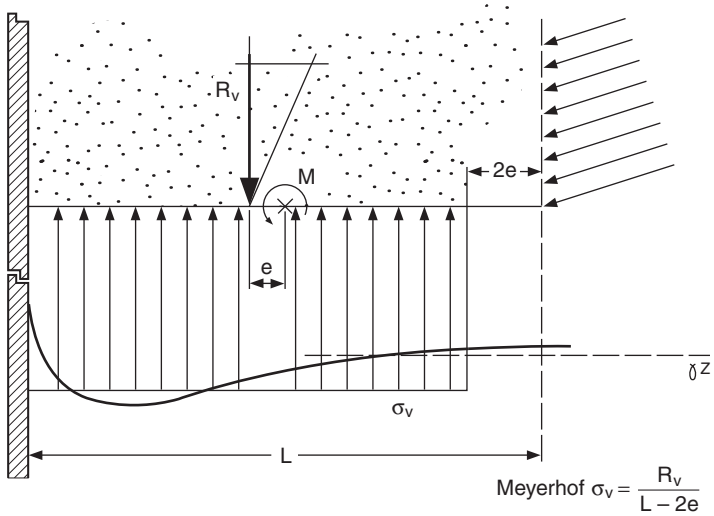

FIGURE 8.35 Foundation pressure for MSE wall calculated by the AASHTO method based on Meyerhof. (*From the Reinforced Earth Co., with permission*)

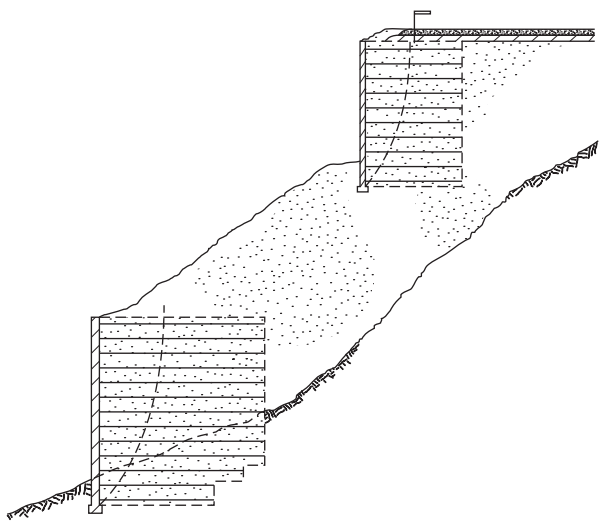

FIGURE 8.36 Superimposed MSE walls. (*From the Reinforced Earth Co., with permission*)

This design approach does not hold when the MSE structures are directly superimposed, one on another, as shown in Fig. 8.37. Such terraced arrangements are sometimes used for high walls. These offset structures are obviously similar to a single embankment with a sloping face. They exhibit essentially the same overall behavior, and are designed as sloping faced walls.

www.EngineeringEBooksPdf.com

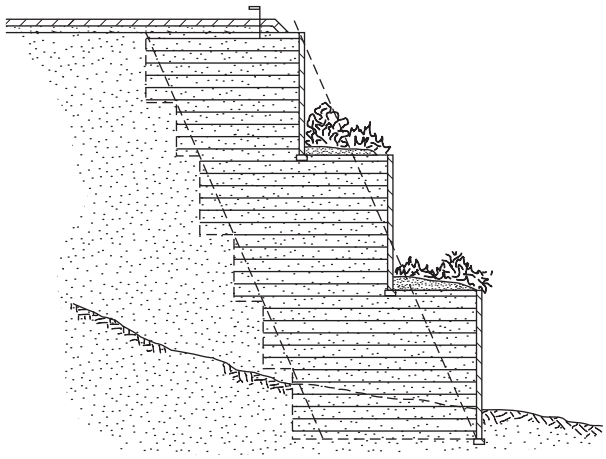

FIGURE 8.37 Terraced MSE wall. (*From the Reinforced Earth Co., with permission*)

8.5.7 Durability Considerations for MSE Walls with Metal Reinforcement

Where metallic reinforcement is used, the life of the structure will depend on the corrosion resistance of the reinforcement. Practically all the metallic reinforcements used in construction of embankments and walls, whether they are strips, bar mats, or wire mesh, are made of galvanized steel. Epoxy coating can be used for additional corrosion protection, but it is susceptible to construction damage, which can significantly reduce its effectiveness. PVC coatings on wire mesh also provide corrosion protection, provided again that the coating is not significantly damaged during construction. When PVC or epoxy coatings are used, the maximum particle size of the backfill should be restricted to ¾ in (19 mm) or less to reduce the potential for construction damage.

For the purpose of determining the sacrificial metal required (corrosion allowance), the following design life is provided, pursuant to recommendations of Task Force 27 of AASHTO-AGC-ARTBA:

Structure classification	Design life, yr
Permanent structure	75
Abutments	100
Rail supporting structures	100
Marine structures	75

The required cross-sectional area of steel reinforcement is calculated using the relationships given in Fig. 8.38 for the selected type of reinforcement (strips or grids). The corrosion loss assumed is based on the following.

In 1985, an FHWA study was initiated to develop practical design and construction guidelines from a technical review of extensive laboratory and field tests on buried

www.EngineeringEBooksPdf.com

STEEL STRIPS

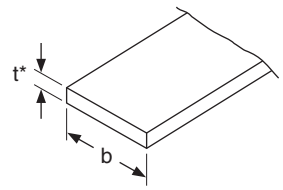

$A_c = b \bullet t^*$ Where t^* = thickness corrected for corrosion loss
A_c = cross section area

STEEL GRIDS

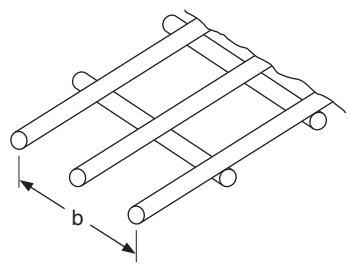

$A_c = \text{number of bars} \bullet \pi \frac{(d^*)^2}{4}$ Where d^* = diameter of bar or wire corrected for corrosion loss

FIGURE 8.38 Metallic reinforcement for MSE walls showing correction for corrosion loss. (*From the Reinforced Earth Co., with permission*)

metals. The results of this research were published in December 1990 in the Federal Highway Administration report FHWA-RD-89-186, "Durability/Corrosion of Soil Reinforced Structures":

For structures constructed with carefully selected and tested backfills to ensure full compliance with the electrochemical requirements, the maximum mass presumed to be lost per side due to corrosion at the end of the required service life may be computed by assuming a uniform loss model which considers the following loss rates:

1. Zinc corrosion rate for first 2 years: 15 μm/yr
2. Zinc corrosion to depletion: 4 μm/yr
3. Carbon steel rate: 12 μm/yr

The resulting sacrificial thickness for a 75-year life based on initial galvanization of 2 oz/ft^2 (86 μm) is approximately 1.5 mm of total sacrificial thicknesses. Since this is a *maximum* loss rate, it is presently assumed that the reduced minimum thickness remains proportional to tensile strength and therefore no further reduction is necessary. (See Fig. 8.39.)

The select backfill materials shall meet the following requirements:

Internal friction angle. The material shall exhibit an internal friction angle of not less than 34 degrees as determined by the standard direct shear test, AASHTO T-236, utilizing a sample of the material compacted to 95 percent of AASHTO T-99, Methods C or D (with oversize correction), at optimum moisture content. Internal friction angle testing is not required for

www.EngineeringEBooksPdf.com

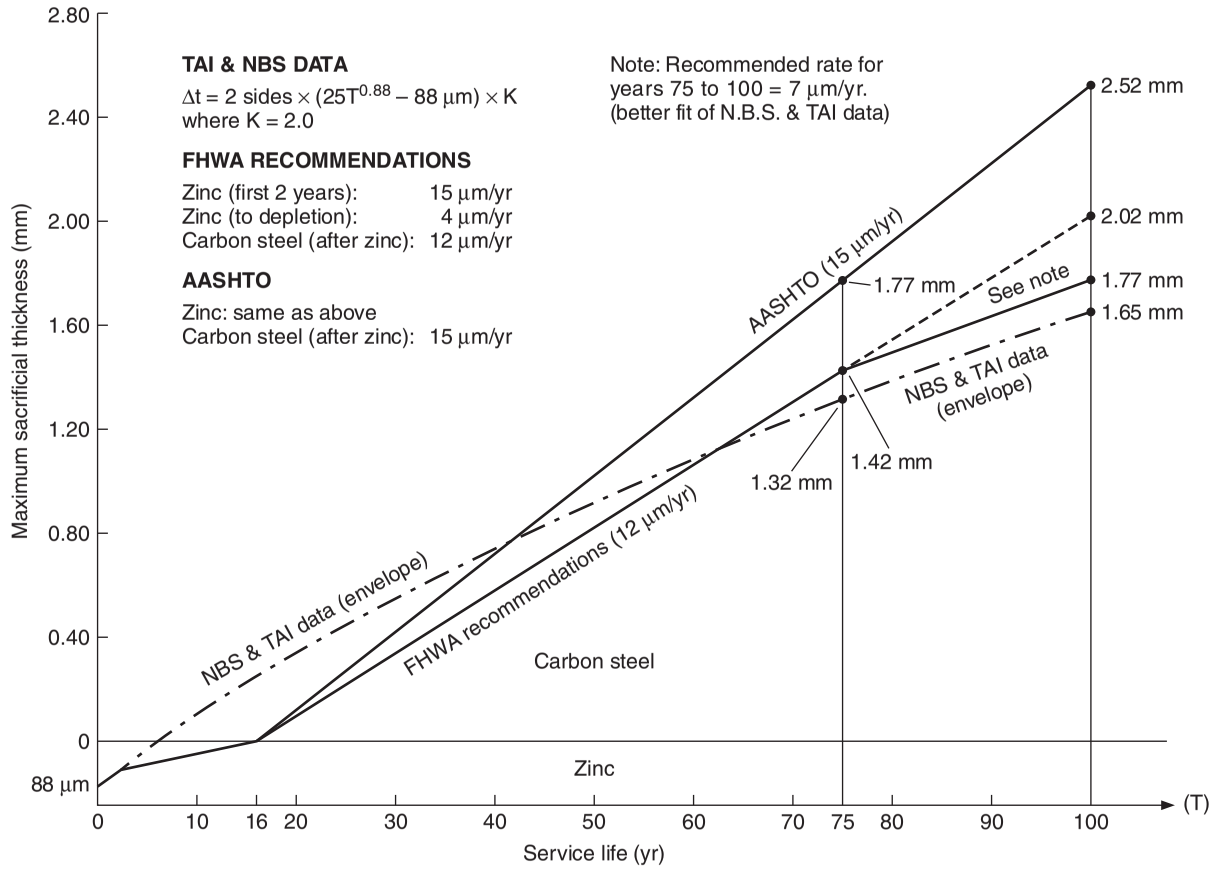

FIGURE 8.39 Maximum sacrificial thickness for calculating corrosion loss. (*From the Reinforced Earth Co., with permission*)

www.EngineeringEBooksPdf.com

TABLE 8.5 Backfill Requirements Related to Durability of Steel Reinforcement

Property	Requirement	Test method
Resistivity	Minimum 3000 Ω · cm, at 100% saturation	California DOT 643
pH	Acceptable range 5–10	California DOT 643
Chlorides	Maximum 100 ppm	California DOT 422
Sulfates	Maximum 200 ppm	California DOT 417

Source: From the Reinforced Earth Co., with permission.

backfill materials that have at least 80 percent of the material greater than or equal to the ¾-in (19-mm) size.

Soundness. The material shall be substantially free of shale or other soft, poor durability particles. The material shall have a magnesium sulfate soundness loss of less than 30 percent after four (4) cycles, as determined by AASHTO T-104.

Electrochemical requirements. The material shall conform to the electrochemical requirements as described in Table 8.5.

The Contractor shall furnish to the Engineer a Certificate of Compliance certifying that the select granular backfill material complies with this section of the specification. A copy of all test results performed by the Contractor, which are necessary to assure compliance with the specifications shall also be furnished to the Engineer.

Backfill not conforming to this specification shall not be used without the written consent of the Engineer.

The frequency of sampling of select granular backfill material, necessary to assure gradation control throughout construction, shall be as directed by the Engineer.

8.5.8 Durability Considerations for MSE Walls with Polymeric Reinforcement

The durability of polymeric reinforcements is influenced by time, temperature, mechanical damage, stress levels, microbiological attack, and changes in the molecular structure due to radiation or chemical exposure. The effects of aging and of chemical and biological exposure are highly dependent on material composition, including resin type, grade, and additives; manufacturing process; and final product physical structure.

Polymeric reinforcement, although not susceptible to corrosion, may degrade as a result of physicochemical activity in the soil, such as hydrolysis, oxidation, and environmental stress cracking. In addition, it is susceptible to construction damage, and some forms may be adversely affected by prolonged exposure to ultraviolet light. The durability of geosynthetics is a complex subject, and research is ongoing to develop reliable procedures for quantification of degradation effects. Moderate-strength geosynthetics have tensile strengths of about 100 lb/in (17.5 N/mm); some are now available that have strengths well over an order of magnitude higher. Current procedure to account for strength loss due to construction damage, and as a result of aging and chemical and biological attack, is to decrease the initial strength of the intact, unaged material for design.

8.5.9 Design Example of MSE Retaining Wall with Steel Reinforcement

The following design example is provided with the permission of the Reinforced Earth Company. Typical calculations are shown, including the determination of allowable

www.EngineeringEBooksPdf.com

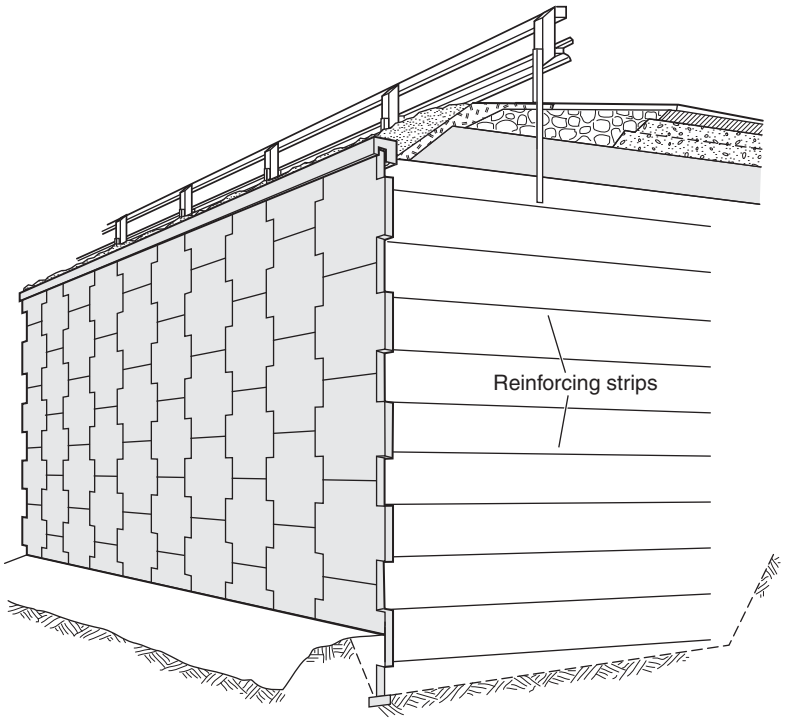

FIGURE 8.40 Cutaway view of typical Reinforced Earth retaining wall. (*From the Reinforced Earth Co., with permission*)

reinforcement tension for galvanized steel reinforcing strips. Figure 8.40 shows a cutaway view of a typical Reinforced Earth retaining wall. Refer to Fig. 8.41 for illustration of calculation steps.

Geometry

$$\text{Height of wall } H = 20 \text{ ft}$$

$$\text{Strip length } B = 20 \text{ ft (AASHTO minimum} = 0.7H = 14 \text{ ft)}$$

Soil Properties

	ϕ	Cohesion, c	Unit weight, γ
R.E. material	34.00°	—	0.125 kip/ft^3
Random fill	25.00°	0.100 kip/ft^2	0.120 kip/ft^3
Foundation	25.00°	0.300 kip/ft^2	—

Other Properties

- Equivalent fill height for traffic surcharge of 0.25 kip/ft^2 =

$$\frac{0.25 \text{ kip/ft}^2}{0.120 \text{ kip/ft}^3} = 2.08 \text{ ft}$$

www.EngineeringEBooksPdf.com

- Maximum value of apparent coefficient of friction (bond) = 1.50.
- Coefficient of friction at foundation level (sliding) = 0.47.
- Surface area of one "A" panel = 24.2 ft^2.
- Maximum reinforcement tension = 7.20 kips per strip.
- Stress at connection = 100 percent of maximum tie tension.

General Calculations. Random fill is used outside the zone filled with R.E. (Reinforced Earth) material.

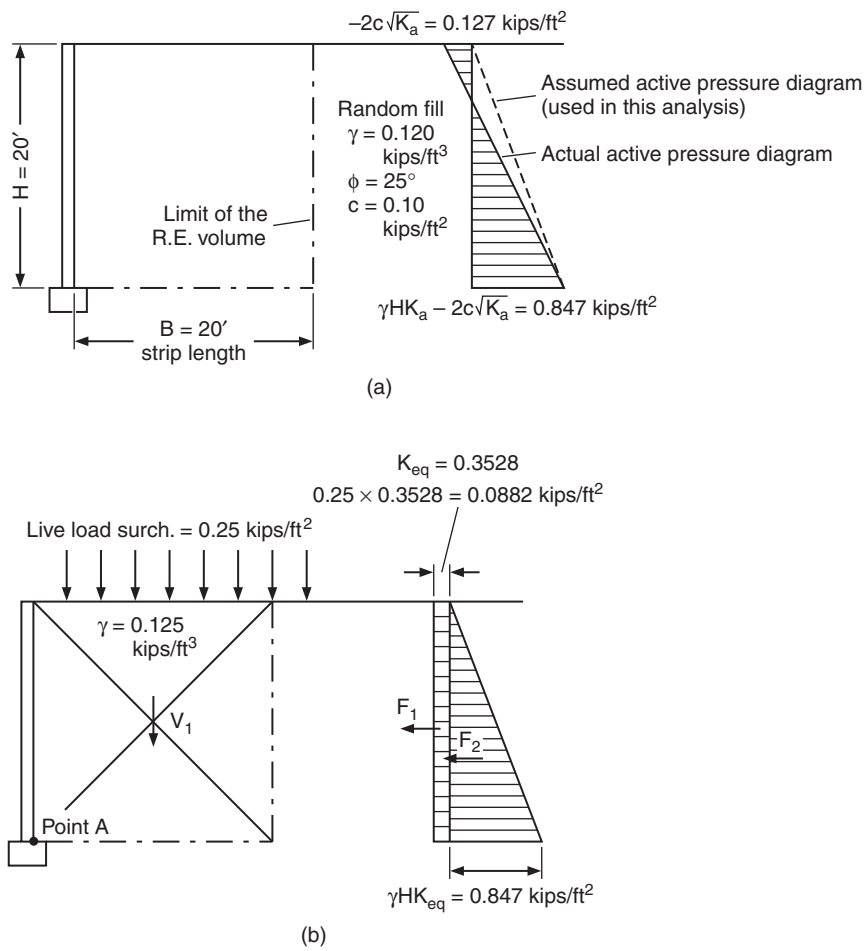

FIGURE 8.41 Design of Reinforced Earth retaining wall showing (*a*) active earth pressure, (*b*) addition of pressure from surcharge, (*c*) analysis at intermediate level, and (*d*) effective strip length. (*From the Reinforced Earth Co., with permission*)

www.EngineeringEBooksPdf.com

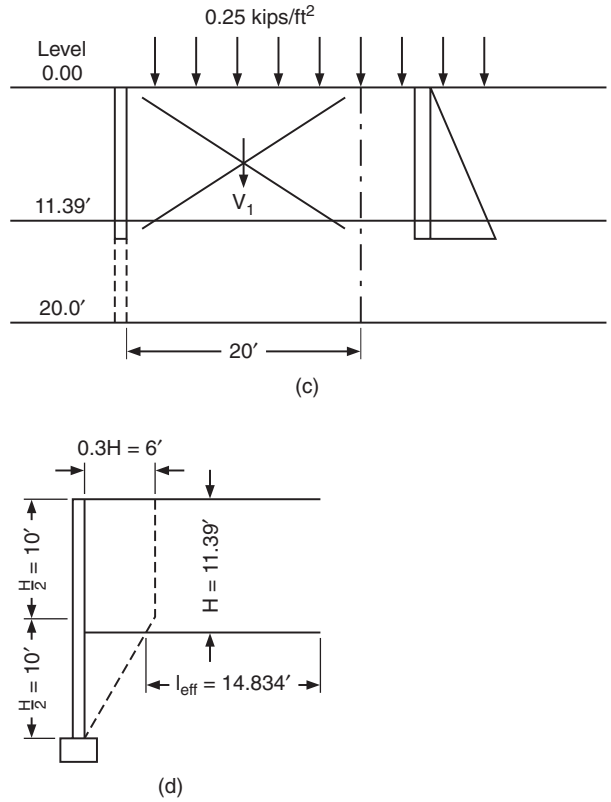

FIGURE 8.41 (*Continued*)

Pressure Coefficient for Random Fill. For the case of level ground at the top of the wall, a vertical backface, and neglecting the effect of wall friction, the pressure coefficient for the fill is given by

$$K_a = \tan^2\left(45° - \frac{\phi}{2}\right)$$

Substituting $\phi = 25°$ gives

$$K_a = \tan^2\left(45° - \frac{25°}{2}\right) = 0.4059$$

To allow for the effects of cohesion in the fill (see Fig. 8.41*b*), define an equivalent pressure K_{eq} such that

$$\gamma H K_{eq} = \gamma H K_a - 2c\sqrt{K_a}$$

Thus

$$K_{eq} = K_a - \frac{2c\sqrt{K_a}}{\gamma H} = \tan^2\left(45° - \frac{\phi_{eq}}{2}\right)$$

www.EngineeringEBooksPdf.com

Solving for ϕ_{eq}, the equivalent soil friction angle can then be calculated as

$$\phi_{eq} = 2\left(45° - \arctan\sqrt{K_a - \frac{2c\sqrt{K_a}}{\gamma H}}\right)$$

$$= 2\left(45° - \arctan\sqrt{0.4059 - \frac{2 \times 0.10\ \text{kip/ft}^2 \times \sqrt{0.4059}}{0.12\ \text{kip/ft}^3 \times 20\ \text{ft}}}\right)$$

$$= 28.58°$$

The calculation of the equivalent pressure coefficient follows as

$$K_{eq} = \tan^2\left(45° - \frac{25.58°}{2}\right) = 0.3528$$

This coefficient is subsequently used to calculate F_1, the horizontal force on the wall caused by the surcharge, and F_2, the horizontal force on the wall caused by the fill.

Vertical Loads and Resisting Moment. The vertical loads to be considered are the weight of the reinforced fill, V_1, and of the surcharge, V_{surch}. These loads are calculated and multiplied by their horizontal moment arm from the base (point A in Fig. 8.41*b*), and the results are summed to determine the resisting moment M_r. The sum of the vertical loads is designated R_v.

Load, kips/ft	Moment arm, ft	Resisting moment M_r, kips · ft/ft
$V_1 = 0.125\ \text{kip/ft}^3 \times 20\ \text{ft} \times 20\ \text{ft} = 50.0\ \text{kips/ft}$	10 ft	500 kips · ft/ft
$V_{surch} = 0.25\ \text{kip/ft}^2 \times 20\ \text{ft} = 5.0\ \text{kips/ft}$	10 ft	50 kips · ft/ft
$R_v = V_1 + V_{surch} = 50 + 5 = 55\ \text{kips/ft}$		Total $M_r = 550$ kips · ft/ft

Horizontal Forces and Overturning Moment. The horizontal force due to the surcharge, F_1, and that due to the random fill, F_2, are illustrated in Fig. 8.41*b*. They are calculated using the value of K_{eq} determined previously and multiplied by their vertical moment arm from the base, and the results are summed to determine the overturning moment M_o.

Load, kips/ft	Moment arm, ft	Overturning moment M_o, kips · ft/ft
$F_1 = 0.3528 \times 0.250\ \text{kip/ft}^2 \times 20\ \text{ft} = 1.764\ \text{kips/ft}$	10 ft	17.64 kips · ft/ft
$F_2 = 0.3528 \times 0.120\ \text{kip/ft}^3 \times (20\ \text{ft})^2 \times (½) = 8.47\ \text{kips/ft}$	20 ft/3 = 6.67 ft	56.44 kips · ft/ft
$F_1 + F_2 = 10.23\ \text{kips/ft}$		$M_o = 74.08$ kips · ft/ft

www.EngineeringEBooksPdf.com

Eccentricity e *(without Surcharge).* The eccentricity without surcharge must be calculated to make sure it is less than one-sixth of the base dimension B, which is the length of the reinforcing strip.

$$e = \frac{B}{2} - \frac{M_r - M_o}{V_1} = \frac{20}{2} - \frac{500 - 74.08}{50} = 1.4816 \text{ ft}$$

$$e < \frac{B}{6} = \frac{20}{6} = 3.33 \text{ ft} \qquad \text{OK}$$

Safety Factors. The safety factor against overturning is the ratio of the resisting moment to the overturning moment. The safety factor against sliding is the ratio of the horizontal resisting forces (weight of reinforced fill times friction factor plus foundation cohesion force) to the horizontal active forces. These safety factors must be calculated to make sure they are within limits.

$$\text{SF (overturning)} = \frac{M_r}{M_o} = \frac{500}{74.08} = 6.75 > 2.0 \qquad \text{OK}$$

$$\text{SF (sliding)} = \frac{V_1 \tan 25° + c \times B}{F_1 + F_2}$$

$$= \frac{50 \times \tan 25° + 0.3 \times 20}{10.23} = 2.87 > 1.50 \qquad \text{OK}$$

Eccentricity e *(with Surcharge; Use Total* M_r*).* The eccentricity calculated with the surcharge should also be less than $B/6$. This value of e will be used to calculate the bearing pressure.

$$e = \frac{B}{2} - \frac{M_r - M_o}{R_v} = \frac{20}{2} - \frac{550 - 74.08}{55} = 1.347 \text{ ft}$$

Bearing Pressure. The bearing pressure σ_v under the reinforced fill can be calculated from Meyerhof's equation. The pressure must be within the allowable value for the site.

$$\sigma_v = \frac{\Sigma V}{B - 2e}$$

$$= \frac{55 \text{ kips}}{20 \text{ ft} - 2 \times 1.347 \text{ ft}} = 3.18 \text{ kips/ft}^2$$

Design at Intermediate Level. Design is illustrated for a level 11.39 ft below the top of the wall. (See Fig. 8.41*c* and *d.*) The same procedure is used for other levels.

$$\Sigma V_1 = 0.25 \text{ kip/ft}^2 \times 20 \text{ ft} + 0.125 \text{ kip/ft}^3 \times 11.39 \text{ ft} \times 20 \text{ ft}$$
$$= 33.475 \text{ kips/ft}$$

$$\text{Resisting moment} = 33.475 \text{ kips} \times 10 \text{ ft} = 334.75 \text{ kips} \cdot \text{ft/ft}$$

www.EngineeringEBooksPdf.com

$$\text{Overturning moment } \Sigma M_o = 0.3528 \times [0.25 \text{ kip/ft}^2 \times (11.39)^2 \times \tfrac{1}{2} + 0.120 \text{ kip/ft}^3 \times (11.39)^3 \times \tfrac{1}{6}] = 16.15 \text{ kips} \cdot \text{ft/ft}$$

$$\text{Safety factor for overturning} = \frac{334.75}{16.15} = 20 > 2.0 \qquad \text{OK}$$

$$e = \frac{20}{2} - \frac{334.75 - 16.15}{33.475} = 0.482 \text{ ft}$$

$$e \leq \frac{20}{6} = 3.33 \text{ ft} \qquad \text{OK}$$

$$\sigma_v = \frac{\Sigma V_1}{B - 2e} = \frac{33.475 \text{ kip}}{20 \text{ ft} - 2 \times 0.482 \text{ ft}} = 1.759 \text{ kips/ft}^2$$

The pressure coefficient K is assumed to vary linearly between K_0 (the coefficient of earth pressure at rest) at the top of the wall and K_a (the coefficient of active earth pressure) at a depth of 20 ft. Below a 20-ft depth, $K = K_a$. The distance below the top of the wall is d.

$$\text{Maximum horizontal pressure } \sigma = K\sigma_v$$

$$K_0 = 1 - \sin 34° = 0.4408$$

$$K_a = \tan^2\left(45° - \frac{34°}{2}\right) = 0.2827$$

$$K = K_0 - \frac{K_0 - K_a}{20 \text{ ft}} \times d$$

$$= 0.4408 - \frac{0.4408 - 0.2827}{20 \text{ ft}} \times 11.39 \text{ ft}$$

$$K = 0.3508$$

$$\sigma_h = 0.3508 \times 1.759 \text{ kips/ft}^2 = 0.617 \text{ kip/ft}^2$$

The area of a standard "A" panel is 24 ft^2. Use four strips per panel.

$$\text{Reinforcing strip tension} = \frac{0.617 \times 24}{4} = 3.73 \text{ kips per strip}$$

$$3.73 \text{ kips/strip} < 7.2 \text{ maximum tension for 75-yr design life} \qquad \text{OK}$$

(See subsequent calculations for maximum tension allowable for strip and connections.)

Check length of strip:

$$V = 0.125 \text{ kip/ft}^2 \times 11.39 \text{ ft} \times 20 \text{ ft} = 28.475 \text{ kips (without surcharge)}$$

www.EngineeringEBooksPdf.com

$$\text{Resisting moment} = 28.475 \text{ kips} \times 10 \text{ ft} = 284.75 \text{ kips} \cdot \text{ft/ft}$$

$$\text{Overturning moment } \Sigma M_o = 16.15 \text{ kips} \cdot \text{ft}$$

$$\text{Safety factor for overturning} = \frac{284.75}{16.15} = 18 > 2.0 \qquad \text{OK}$$

$$e = \frac{20}{2} - \frac{284.75 - 16.15}{28.475} = 0.567 \text{ ft}$$

$$e \leq {}^{20}\!/_{6} = 3.33 \text{ ft} \qquad \text{OK}$$

$$\sigma_v = \frac{28.475 \text{ kips}}{20 \text{ ft} - 2 \times 0.567 \text{ ft}} = 1.509 \text{ kips/ft}^2$$

$$\sigma_h = 0.3508 \times 1.509 \text{ kips/ft}^2 = 0.5295 \text{ kip/ft}^2$$

$$T = \text{tension on an "A" panel} = \sigma_h \times A = 0.5295 \text{ kip/ft}^2 \times 24.2 \text{ ft}^2$$

$$= 12.81 \text{ kips}$$

$$R = \text{frictional resistance of reinforcing strips}$$

$$= 2b \times l_{\text{eff}} \times H \times \delta \times f^* \times N$$

$$\text{where } 2b = \frac{2 \times 1.97}{12} = 0.328 \text{ ft} = \text{width of top and bottom surface of one strip}$$

$H = 11.39$ ft = overburden
$l_{\text{eff}} = 14.834$ ft = effective strip length
$\delta = 0.125$ kip/ft^3
$f^* = 1.5 - [(1.5 - \tan 34° \times 11.39 \text{ ft})/20 \text{ ft}] = 1.03$
= coefficient of apparent friction
$N = 4$ = number of strips per panel

$$R = 0.328 \text{ ft} \times 14.834 \text{ ft} \times 11.39 \times 0.125 \text{ kip/ft}^3 \times 1.03 \times 4 = 28.54 \text{ kips}$$

$$\text{Effective length safety factor} = \frac{R}{T} = \frac{28.54}{12.81} = 2.23 > 1.5 \qquad \text{OK}$$

Design Summary at Intermediate Levels

Level, ft	Maximum horizontal stress,	Stress at facing, kips/ft^2	Straps per panel	Reinforcing strip tension, kips	Horizontal stress (bond), kips/ft^2	Effective length safety factor	Strip length, ft
2.00	0.21	0.21	4	1.29	0.11	2.52	20.00
4.01	0.31	0.31	3	2.50	0.21	1.84	20.00
6.47	0.42	0.42	3	3.39	0.32	1.76	20.00
8.93	0.52	0.52	3	4.21	0.43	1.67	20.00
11.39	0.62	0.62	4	3.73	0.53	2.23	20.00
13.85	0.70	0.70	4	4.26	0.62	2.28	20.00
16.31	0.79	0.79	4	4.76	0.71	2.29	20.00
18.77	0.86	0.86	4	5.22	0.79	2.25	20.00

www.EngineeringEBooksPdf.com

Calculation of Allowable Reinforcement Tension. The following calculations show the determination of the allowable reinforcement tension for galvanized reinforcing strips in permanent mechanically stabilized earth structures. Allowable stresses in strips and components are based on the AASHTO *Bridge Specifications*. The allowable reinforcement tension is based on maintaining allowable hardware stresses to the end of a 75-year service life. After 75 years, the structure will continue to perform with reinforcement stresses that may or may not exceed allowable levels, depending on the soil environment and the applied reinforcement loads. The calculations are based on the following mechanical properties of the reinforcement components.

- *Reinforcing strips*

  50- × 4-mm ribbed (1.97- × 0.16-in)

  ASTM A572 grade 65

  F_u = 80 kips/in^2 (minimum tensile strength)

  F_y = 65 kips/in^2 (minimum yield point)

- *Tie strips*

  50- × 3.0-mm (1.97- × 0.12-in)

  ASTM A570 grade 50

  F_u = 65 kips/in^2

  F_y = 50 kips/in^2

- *Bolts*

  ½-in-diameter × 1¼ inch long

  ASTM A325

To begin, consider the tie strips at a section where there are no bolt holes (Section A-A, Fig. 8.42). There are two 50- × 3-mm tie strip plates with 2 oz/ft^2 (86 μm) of zinc. Calculate the life of the zinc coating (see Art. 8.5.7):

$$T = 2 \text{ yr} + \frac{86\ \mu\text{m} - 2 \text{ yr}(15\ \mu\text{m/yr})}{4\ \mu\text{m/yr}} = 16 \text{ yr}$$

No carbon steel is lost until after depletion of the zinc.

Next, calculate the carbon steel loss in the subsequent 59 years. (See Art. 8.5.7.) The thickness of the carbon steel loss on one side is determined as follows:

$$\Delta e = 59 \text{ yr} \times 12\ \mu\text{m/yr} = 708\ \mu\text{m on each exposed side}$$

The outside surfaces of the tie strip plates are in contact with soil; the inside surfaces are not in contact with soil. Therefore, use one-half the carbon steel loss rate for the inside surfaces. The sacrificial thickness of reinforcement during service life is determined from:

$$E_S = 708\ \mu\text{m} + 354\ \mu\text{m} = 1062\ \mu\text{m per plate}$$

The thickness of the reinforcement at end of service life is the nominal thickness minus the sacrificial thickness:

$$E_C = E_n - E_S = 3000\ \mu\text{m} - 1062\ \mu\text{m} = 1938\ \mu\text{m per plate}$$

www.EngineeringEBooksPdf.com

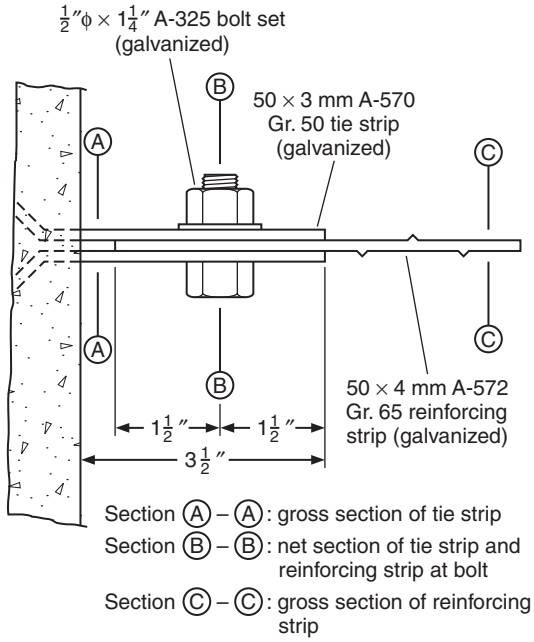

FIGURE 8.42 Structural connection of reinforcing strip to facing panel. (*From the Reinforced Earth Co., with permission*)

The cross-sectional area at end of service life is found from:

$$A_S = \frac{2 \text{ plates} \times 50 \text{ mm} \times 1938\ \mu\text{m/plate}}{25.4 \text{ mm/in} \times 25{,}400\ \mu\text{m/in}} = 0.300 \text{ in}^2$$

The allowable tensile stress is found from:

$$F_T = 0.55F_y = 0.55(50 \text{ kips/in}^2) = 27 \text{ kips/in}^2$$

The allowable tension on reinforcement is:

$$T_{\text{al}} = F_T A_S = 27 \text{ kips/in}^2 \times 0.300 \text{ in}^2 = 8.10 \text{ kips per connection}$$

Now, consider the tie strips at a section through the bolt holes (Section B-B, Fig. 8.42). There are two 50- × 3-mm tie strip plates with 2 oz/ft^2 (86 μm) of zinc. The diameter of each bolt hole is $^9/_{16}$ in (14.3 mm). The life of the zinc is 16 years, as found in the calculation for Section A-A.

Calculate the thickness of carbon steel loss over the subsequent 59 years:

$$\Delta e = 708\ \mu\text{m per exposed side}$$

www.EngineeringEBooksPdf.com

(See the preceding calculation for Section A-A.) Corrosion does not occur on the inside surfaces of the plates, because of protection provided by sandwiching the reinforcing strip. Thus,

$$E_S = 708\ \mu\text{m per plate}$$

Proceed with calculations for thickness at end of service life, cross-sectional area, allowable tensile stress, and allowable tension force:

$$E_C = E_n - E_S = 3000\ \mu\text{m} - 708\ \mu\text{m} = 2292\ \mu\text{m per plate}$$

$$A_S = \frac{2\text{ plates} \times (50\text{ mm} - 14.3\text{ mm}) \times 2292\ \mu\text{m/plate}}{25.4\text{ mm/in} \times 25{,}400\ \mu\text{m/in}} = 0.254\text{ in}^2$$

$$F_T = 0.50F_u = 0.50(65\text{ kips/in}^2) = 32\text{ kips/in}^2$$

$$T_{\text{al}} = F_T A_S = 32\text{ kips/in}^2 \times 0.254\text{ in}^2 = 8.13\text{ kips per connection}$$

Now, consider the reinforcing strip at a section through the bolt holes (Section B-B, Fig. 8.42). The reinforcing strip is 50 × 4 mm with 2 oz/ft^2 (86 μm) of zinc. The diameter of each bolt hole is 9/16 in (14.3 mm). No carbon steel is lost from reinforcing strip surfaces at the net section, because of the sandwiching protection by the tie strip. Thus,

$$E_S = 0$$

$$E_C = E_n = 4000\ \mu\text{m or 4 mm}$$

$$A_S = \frac{50\text{ mm} - 14.3\text{ mm}}{(25.4\text{ mm/in})^2} \times 4\text{ mm} = 0.221\text{ in}^2$$

$$F_T = 0.50F_u = 0.50(80\text{ kips/in}^2) = 40\text{ kips/in}^2$$

$$T_{\text{al}} = F_T A_S = 40\text{ kips/in}^2 \times 0.221\text{ in}^2 = 8.84\text{ kips per connection}$$

The shear strength of each bolt is found as follows. Each bolt is ½ in × 1¼ in, ASTM A325, galvanized. It is assumed that no carbon steel is lost from the bolt shank, because of sandwiching protection by the strips. The bolt head, nut, and washer have more than adequate metal for loss to corrosion.

The allowable shear stress on the bolt (with threads excluded from the shear plane) is

$$F_V = 1.4 \times 19\text{ kips/in}^2 = 27\text{ kips/in}^2\text{ allowable}$$

The nominal cross-sectional area of the ½-in-diameter bolt is 0.196 in^2. The allowable force on each bolt, considering two shear planes, is

$$T_{\text{al}} = F_V A_S = 27\text{ kips/in}^2 \times 0.196\text{ in}^2 \times 2 = 10.60\text{ kips per connection}$$

A check shows that bearing strength does not control for this case.

Next, consider the reinforcing strip at a section where there are no bolt holes (Section C-C, Fig. 8.42). The reinforcing strip is 50 × 4 mm, with 2 oz/ft^2 (86 μm) of zinc. The life of the zinc is 16 years, from previous calculations.

Calculate the thickness of carbon steel loss over the subsequent 59 years.

$$\Delta e = 708\ \mu\text{m per exposed side (see previous calculations)}$$

$$E_S = 2\text{ sides} \times 708\ \mu\text{m/side} = 1416\ \mu\text{m}$$

www.EngineeringEBooksPdf.com

Calculations follow for the thickness of each reinforcing strip at the end of service life, cross-sectional area, allowable tensile stress, and allowable tensile force:

$$E_C = E_n - E_S = 4000\ \mu\text{m} - 1416\ \mu\text{m} = 2584\ \mu\text{m}$$

$$A_S = \frac{50\ \text{mm} \times 2584\ \mu\text{m}}{25.4\ \text{mm/in}} \times 25{,}400\ \mu\text{m/in} = 0.200\ \text{in}^2$$

$$F_T = 0.55F_Y = 0.55(65\ \text{kips/in}^2) = 36\ \text{kips/in}^2$$

$$T_{\text{al}} = F_T A_S = 36\ \text{kips/in}^2 \times 0.200\ \text{in}^2 = 7.20\ \text{kips per connection}$$

Design Summary for Allowable Reinforcement Tension

Component	Section	Allowable force, kips
Tie strip	Main	8.10
Tie strip	Through bolt holes	8.13
Reinforcing strip	Main	7.20
Reinforcing strip	Through bolt holes	8.84
Bolt	Shear planes	10.60

The least value controls the design. In this case, the allowable reinforcement tension (7.20 kips) is governed by the strength of the reinforcing strip at a section where there are no bolt holes.

8.5.10 Material Properties of Polymeric Reinforcement

The tensile properties of polymeric reinforcement are subject to creep under load because properties of the materials are both time- and temperature-dependent. Also, the materials are subject to damage during the construction process and are affected by durability considerations such as aging. Furthermore, characteristics of geosynthetic products made from the same base polymer exhibit the normal variation of most manufactured products.

The allowable long-term reinforcement strength (tension capacity) based on limit state criteria is

$$T_a = \frac{T_{\text{ult}}}{\text{FS} \times \text{RF}} = \frac{T_{\text{ult}}}{\text{FS} \times \text{RF}_{\text{ID}} \times \text{RF}_{\text{CR}} \times \text{RF}_{\text{D}}} \tag{8.14a}$$

where T_a = allowable limit state tensile load, load per unit width basis
T_{ult} = ultimate tensile strength of reinforcement from wide-strip tensile test (ASTM D4595) for geotextile and geogrids, or rib tensile tests for geogrids (at a strain rate 10 percent/min); the value selected for T_{ult} shall be the minimum average roll value (MARV) for the product to account for statistical variance in the material strength
FS = 1.5 (minimum) is an overall factor of safety to account for uncertainties in structure geometry, fill properties, reinforcement manufacturing variations, and externally applied loads
RF = a combined reduction factor (multiplication of $\text{RF}_{\text{ID}} \times \text{RF}_{\text{CR}} \times \text{RF}_{\text{D}}$)
RF_{ID} = strength reduction factor to account for construction damage
RF_{D} = strength reduction factor to prevent rupture of reinforcement due to chemical and biological degradation
RF_{CR} = strength reduction factor to prevent long-term creep rupture of reinforcement

www.EngineeringEBooksPdf.com

Values of RF_{ID}, RF_{CR}, and RF_D must be determined from the results of prescribed product specific tests, and RF_{ID} and RF_D should be no less than 1.1 each. Alternatively, in lieu of product-specific tests, a default reduction factor RF for certain geosynthetic products that meet AASHTO minimum requirements may be used. The default reduction factor for "applications not having severe consequences should poor performance or failure occur" is 4.0 for permanent applications and 2.5 for certain temporary applications.

The allowable connection strength (T_{ac}) between the wall facing and the reinforcement on a load per unit reinforcement width basis is

$$T_{ac} = \frac{T_{ult} \times CR_u}{FS \times RF_c} \leq \frac{T_{ult} \times CR_s}{FS} \tag{8.14b}$$

where $RF_c = RF_{CR} \times RF_D$ (as defined previously); product-specific long-term degradation data at the environment shall be considered
CR_u = reduction factor to account for reduced ultimate strength resulting from the connection
CR_s = reduction factor to account for reduced strength due to connection pullout
FS = 1.5 (minimum) overall factor of safety as defined previously

ASTM designation D4595, "Standard Test Method for Tensile Properties of Geotextiles by the Wide-Width Strip Method," serves as a quality control test from which a "minimum average roll value (MARV)" is determined and certified by the manufacturer to the user of the product. The MARV value is a measure of the ultimate tensile strength of the polymeric material under the stated test conditions.

As noted, the manufacturing process is subject to variation. The minimum value the manufacturer certifies must therefore meet or exceed the design minimum value. The manufacturer must also be able to meet this minimum value at a specific confidence level. The ASTM and the industry have adopted a 95 percent confidence level. A normal distribution of the test results is assumed.

ASTM Designation D4595. Test method ASTM 4595, which is prescribed by AASHTO, covers the measurement of tensile properties of geotextiles using a wide-width strip specimen. The test is also applied to geogrids. A relatively wide specimen is gripped across its entire width in the clamps of a constant-rate-of-extension (CRE) type tensile testing machine operated at a prescribed rate of extension, applying a longitudinal force to the specimen until the specimen ruptures. The distinctive feature of this test is that the width of the specimen is greater than the length, and this tends to minimize the contraction (neck-down) effect that is present with other test methods for measuring strip tensile properties of geotextiles. It is believed that the test will provide a closer relationship to expected geotextile behavior in the field. Tensile strength, elongation, initial and secant modulus, and breaking toughness of the test specimen can be calculated from the results.

The determination of the wide-width strip force-elongation properties of geotextiles provides design parameters for reinforcement applications such as reinforced MSE walls. D4595 may be used for acceptance testing of commercial shipments of geotextiles, although an individual owner may specify other acceptance criteria.

This test method is generally used by manufacturers, but when it is not, it should be required by owners in order to provide supporting data for the manufacturer's stated MARV. To the end user, MARV is a minimum value that exceeds design requirements.

www.EngineeringEBooksPdf.com

To account for testing variation, the manufacturer is required to take a sufficient number of specimens per fabric swatch that the user may expect, at the 95 percent probability level, that the test result will not be more than 5.0 percent of the average above or below the true average of the swatch for both the machine and the cross-machine direction.

The number of tests required to establish a MARV depends upon whether a reliable estimate of the coefficient of variation v of individual observation exists, in the laboratories of either the manufacturer or the end user. Specifically, when there is a reliable estimate of v based upon extensive past records for similar materials tested as directed in the method, the required number of specimens is calculated using the equation:

$$n = \left(\frac{tv}{A}\right)^2 \tag{8.15}$$

where n = number of specimens (rounded upward to a whole number)
v = reliable estimate of coefficient of variation of individual observations on similar materials in user's laboratory under conditions of single-operator precision, %
t = value of Student's t for one-sided limits (see Table 8.6), a 95% probability level, and degrees of freedom associated with the estimate of v
A = 5.0 percent of average, the value of allowable variation

When there is no reliable estimate of v for the manufacturer's or user's laboratory, the equation should not be used directly. Instead, specify the fixed number of six specimens each for the machine direction and the cross-machine direction tests. The number of specimens is calculated using $v = 7.4$ percent of the average. This value for v is somewhat larger than usually found in practice. When a reliable estimate of v for the user's laboratory becomes available, the above equation will usually require fewer than the fixed number of specimens.

D4595 specifically includes formulas for determining the initial tensile modulus and the offset tensile modulus. Additionally, the formula for breaking toughness is included. The appendix to the designation contains graphical representations for the determination of the modulus values.

TABLE 8.6 Values of Student's t for One-Sided Limits and 95% Probability

df	One-sided	*df*	One-sided	*df*	One-sided
1	6.314	11	1.796	22	1.717
2	2.920	12	1.782	24	1.711
3	2.353	13	1.771	26	1.706
4	2.132	14	1.761	28	1.701
5	2.015	15	1.753	30	1.697
6	1.943	16	1.746	40	1.684
7	1.895	17	1.740	50	1.676
8	1.860	18	1.734	60	1.671
9	1.833	19	1.729	120	1.658
10	1.812	20	1.725	∞	1.645

df = degrees of freedom = number of samples − 1.
Source: From *Geotextiles* magazine, with permission.

www.EngineeringEBooksPdf.com

8.5.11 Design Example of MSE Retaining Wall with Geogrid Reinforcement

The following design example (provided courtesy of Tensar Earth Technologies) illustrates an application of AASHTO specifications and the tieback wedge method of analysis.

Step 1: Qualify Design Assumptions. Review plans, specifications, and available information to confirm feasibility, to determine if the information is adequate to continue with design, and to ascertain that the wall layout is clearly understood.

Step 2: Define Parameters for Soil, Reinforcement, Geometry, and Loading. On the basis of the information provided, clearly state the design parameters and factors of safety that will be used for design. Provide a diagram for the geometry of the wall that will be designed indicating slopes above and below the wall, any surcharge loadings and their locations, magnitude and direction of application, and hydrostatic and seismic loading conditions.

For this example, refer to Fig. 8.43 for geometry. Design parameters are as follows:

1. Soil

Zone	ϕ', °	c	γ, lb/ft^3
Reinforced fill	34	0	120
Retained fill	30	0	120
Foundation	30	0	120

Allowable foundation bearing stress is 6000 lb/ft^2.

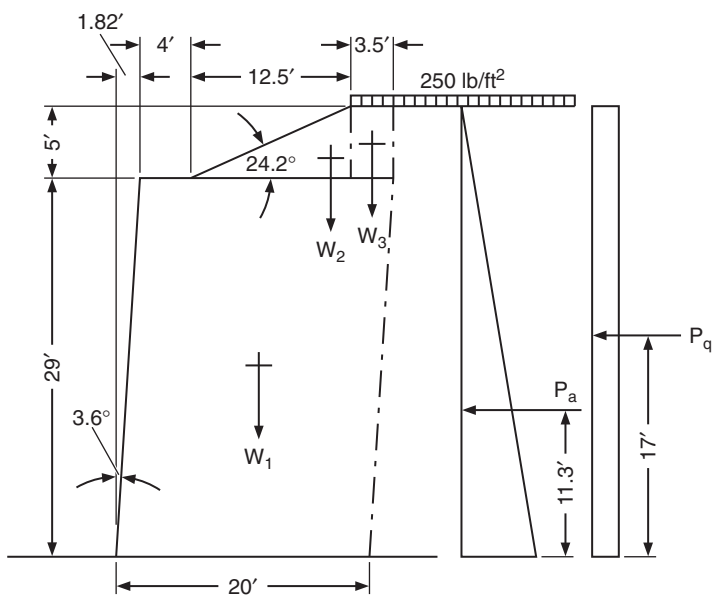

FIGURE 8.43 Design example of MSE retaining wall with geogrid reinforcement. (*From Tensar Earth Technologies, with permission*)

www.EngineeringEBooksPdf.com

2. Groundwater: none
3. Surcharge: 250 lb/ft^2 uniform
4. Seismic loading: none

Step 3: Calculate External Stability. First calculate the coefficient of active earth pressure, K_a. The slope angle β is zero above the wall because the slope levels before reaching the end of the reinforcement. Had the slope extended beyond the tail of the reinforcement, a trial wedge solution or infinite slope calculation would be required, depending on the distance of the slope extension.

For the following calculation, refer to Art. 8.2.3 for equation and nomenclature:

For $\phi' = 30°$, $\beta = 0$, $\theta = 93.6°$ (face has 3.6° batter), $\delta = 0$: $K_a = 0.31$.

Minimum embedment length $L \approx 0.7H = 0.7(29) = 20.3$ ft. Use 20 ft.

Sum moments and forces about the toe of the wall and solve for external safety factors (SF) as follows:

Item, Fig. 8.43	Force, lb	Moment arm, ft	Moment, ft · lb
W_1	69,600	10.91	759,336
W_2	3,750	14.15	53,075
W_3	2,099	20.07	42,127
W_4	875	20.07	17,661
P_a	21,502	11.33	243,613
P_q	2,635	17.00	44,795

$R_v = W_1 + W_2 + W_3 = 76{,}325$ lb
$R_h = P_a + P_q = 24{,}137$ lb
Resisting moment $= M_1 + M_2 + M_3 = 854{,}538$ ft · lb
Overturning moment $= 243{,}613 + 44{,}795 = 288{,}408$ ft · lb
SF overturning $= 854{,}538/288{,}408 = 2.96 \geq 2.0$ OK
SF sliding $= R_v C_i \tan 30°/R_h = 76{,}325 \times 0.5774/24{,}137$
$= 1.82 \geq 1.5$ OK

The safety factor for sliding should be calculated in at least two locations: at the interface of the foundation and the reinforced fill, and at the lowest geogrid. In this case, C_i, the coefficient of interaction between the geogrid and the reinforced fill, is 1.0 according to test data supplied by the geogrid manufacturer. Because the reinforced fill is stronger than the foundation soils, the lowest safety factor for sliding is at the foundation interface.

Next check bearing. The eccentricity of the vertical reaction is

$$e = \frac{L}{2} - \frac{M_r - M_{ot}}{R_v} = \frac{20}{2} - \frac{872{,}188 - 288{,}408}{76{,}325} = 2.35 \leq \frac{L}{6}$$

The maximum bearing stress is then

$$\sigma_v = \frac{R_v}{L - 2e} = \frac{76{,}325}{20 - 2 \times 2.35} = 4990 \text{ lb/ft}^2 \leq 6000 \text{ lb/ft}^2 \qquad \text{OK}$$

All external safety factors are satisfied. Next, calculate internal safety factors for geogrid tension, pullout at face, and pullout past the Rankine failure plane.

www.EngineeringEBooksPdf.com

TABLE 8.7 Calculations for Tension in Geogrid Reinforcement of MSE Retaining Wall

No.	Height, ft	Depth, ft	W_1, lb	W_2, lb	W_3, lb	W_4, lb	P_a, lb/ft^2	P_q, lb/ft^2	σ_v, lb/ft^2	v_i, ft^2	T, lb/ft	Grid, UX-
13	26.67	2.33	6,692	3750	2099	875	999	568	492	3.99	509	1500
12	23.35	5.65	13,560	3750	2099	875	2,108	826	895	3.34	774	1500
11	20.00	9.00	21,600	3750	2099	875	3,643	1084	1326	3.34	1148	1500
10	16.67	12.33	29,592	3750	2099	875	5,582	1342	1782	3.00	1387	1600
9	14.00	15.00	36,000	3750	2099	875	7,434	1549	2175	2.67	1504	1600
8	11.34	17.66	42,384	3750	2099	875	9,543	1755	2598	2.33	1570	1600
7	9.34	19.66	47,184	3750	2099	875	11,302	1910	2940	2.00	1525	1600
6	7.34	21.66	51,984	3750	2099	875	13,210	2065	3309	1.67	1433	1600
5	6.00	23.00	55,200	3750	2099	875	14,571	2168	3573	1.34	1237	1600
4	4.67	24.33	58,392	3750	2099	875	15,988	2271	3851	1.33	1328	1600
3	3.34	25.66	61,584	3750	2099	875	17,471	2374	4146	1.34	1436	1600
2	2.00	27.00	64,800	3750	2099	875	19,032	2478	4463	1.34	1545	1600
1	0.67	28.33	67,992	3750	2099	875	20,647	2581	4801	1.34	1662	1600
0		29.00	69,600	3750	2099	875	21,502	2635	4989			

www.EngineeringEBooksPdf.com

Step 4: Calculate Internal Stability. The calculation of K_a for this check is similar to the external calculation, except that the slope angle above the wall (if any) is always assumed to be zero. Thus, $K_a = 0.31$ in this example. The additional forces contributed by the sloping surface are accounted for in the summation of forces and moments in determining bearing stress. Calculation of internal stability and tension in reinforcements is similar to the preceding calculations. At each level of reinforcement, the vertical stress σ_i is calculated on the basis of the resultant of the forces and moments of both the reinforced fill and the external forces. This stress is then multiplied by K_a and the vertical tributary area v_i to calculate the tension in the reinforcement. If the calculated tension T exceeds the allowable tension T_{al}, either a stronger reinforcement or a reduced vertical spacing must be adopted.

The allowable design stress for the geogrids is determined from AASHTO criteria, considering both ultimate strength and serviceability. Both the geogrid and the connection of the grid to the face must be considered. In this case the following allowable tension values have been determined for two geogrids:

$$\text{Geogrid UX1500: } T_{al} = 1267 \text{ lb/ft}$$

$$\text{Geogrid UX1600: } T_{al} = 1731 \text{ lb/ft}$$

The calculations for tension in Table 8.7 can now be made; the last column indicates the reinforcement selected.

Check pullout in the top geogrid layer. Geogrids must extend beyond the failure plane ($45° - \phi/2$) by at least 3 ft.

$$L_e = 20 - [26.67 \tan (45° - 34/2) + 26.67 \tan (3.6°)]$$

$$= 7.50 \text{ ft} \geq 3.0 \qquad \text{OK}$$

Calculate pullout resistance by friction (two grid sides) based on weight acting beyond the failure plane:

$$\text{Minimum pullout capacity} = 2[7.5 \text{ ft} \times 2.33 \text{ ft} \times 120 \text{ lb/ft}^3 + W_3]C_i \tan \phi$$

$$= 2(2097 + 2099)1.00 \tan 34°$$

$$= 5660 \text{ lb/ft}$$

$$\text{FS} = 5660/508 = 11.1 \geq 2.0 \qquad \text{OK}$$

8.5.12 K_0-Stiffness Method—A Unified Method for Both Metallic and Polymeric Reinforced Soil Walls

Allen and Bathurst (2001) developed a new methodology for estimating reinforcement loads in both steel and geosynthetic reinforced soil walls known as the K_0-Stiffness Method. Figure 8.44*a* and *b,* for polymeric and metal reinforcements, respectively, are provided for estimating the reinforcement load distribution with respect to the magnitude of maximum reinforcement tension from the top to the bottom of the wall. The soil reinforcement load distribution factor ($D_{t_{max}}$) in these two figures was determined empirically from all of the available field wall case histories. There were empirical databases consisting of measured reinforcement strains and loads from nine full-scale field geosynthetic wall cases (13 different wall sections and surcharge conditions, and 58 individual data points) and 19 full-scale field steel reinforced soil wall cases

www.EngineeringEBooksPdf.com

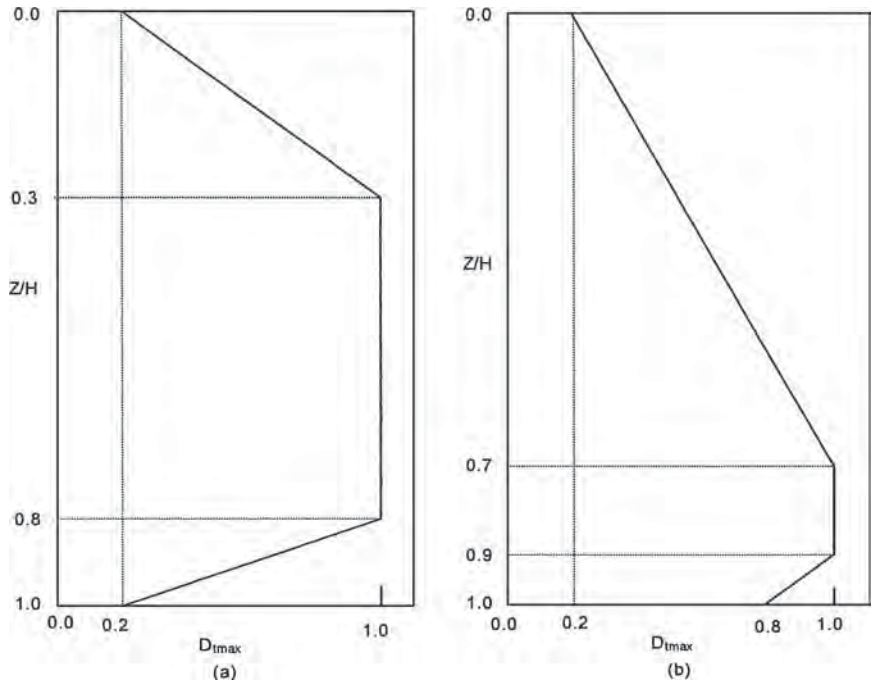

FIGURE 8.44 Distribution of maximum tension force in a reinforcement layer T_{max} with normalized depth below top of wall. (*a*) For geosynthetic-reinforced soil walls; (*b*) for steel-reinforced soil walls. (*From* Research Report WA-RD 528.1, *Washington State Department of Transportation, Olympia, Wash., with permission*)

(24 different wall sections and surcharge conditions, and 102 individual data points). The resulting factor is shown in Fig. 8.44*a* for geosynthetic-reinforced soil walls and in Fig. 8.44*b* for steel-reinforced soil walls. This factor, $D_{t_{max}}$, is the ratio of the maximum tension force T_{max} in a reinforcement layer to the maximum reinforcement loads in the wall, T_{mxmx} (the maximum value of T_{max} within the wall). The two parts of Fig. 8.44 provide the distributions of load, but the magnitude of T_{max} is evaluated by the equations of the K_0-Stiffness Method in Art. 8.5.13. Empirical reinforcement load distributions provided in Fig. 8.44*a* and *b* apply only to walls constructed on a firm soil foundation. The distributions that would result for a rock or soft-soil foundation may differ from those shown. The two parts of the figure demonstrate the differences in reinforcement load distributions between geosynthetic- and steel-reinforced soil walls. The long recognized fact of nontriangular load distribution is clarified, especially for the geosynthetic-reinforced soil wall. Though two different drawings have been used to determine the reinforcement load distribution, this new method provides an improved load estimation for both steel- and geosynthetic-reinforced soil walls and a unified approach.

This new method was developed empirically through analyses of many full-scale wall case histories. In most cases, reinforcement loads had to be estimated from measured reinforcement strain converted to load through a properly estimated reinforcement modulus. For metal-reinforced soil walls, the use of Young's modulus to convert strain to stress and load is relatively straightforward. However, to accurately determine the

www.EngineeringEBooksPdf.com

reinforcement loads for geosynthetic-reinforced soil walls, the correct modulus, considering time and temperature effects, had to be estimated accurately. The creep modulus generated from long-term laboratory creep data through regular product analysis was considered accurate enough for estimating reinforcement loads from measured strains.

Once the correct load levels in the reinforcement layers were established, the reinforcement loads obtained from the full-scale walls were compared to what would be predicted with the new method and the current methodologies found in design guidelines and design codes, including the simplified coherent gravity approach in article 5.8.4.1 of AASHTO. All existing design methodologies were found to provide inaccurate load predictions, especially for geosynthetic-reinforced walls. Considering all available case histories, Allen and Bathurst (2001) reported that the average and coefficient of variation (COV) of the ratio of the predicted to measured T_{max}, the peak reinforcement load in each layer, for the simplified method were as follows: 2.9 and 85.9 percent, respectively, for geosynthetic walls, and 0.9 and 50.6 percent, respectively, for steel-reinforced soil walls. The average and COV of the ratio for the K_0-Stiffness Method were as follows: 1.12 and 40.8 percent, respectively, for geosynthetic walls, and 1.12 and 35.1 percent, respectively, for steel-reinforced soil walls. This indicates a marked improvement and shows that the calculated loads can be estimated more closely with the $D_{t_{max}}$ factors and the K_0-Stiffness Method.

In the determination of the magnitude of T_{max} in the wall, the stiffness of all wall components (facing type, facing batter, reinforcement stiffness, and spacing) relative to soil stiffness is evaluated. By the nature of extensibility of soil reinforcement, the reinforcement load distributions ($D_{t_{max}}$) are differentiated by two unique figures. From working load to ultimate load up to incipient soil failure, this methodology covers the full range of strain and load predictions. The method is workable to estimate reinforcement responses for both the serviceability and strength limit state. It also includes the estimate of wall deformation from reinforcement strain prediction, load, and resistance factors that account for the uncertainty in the method and material properties.

8.5.13 Estimating Maximum Reinforcement Load Using the K_0-Stiffness Method

According to the K_0-Stiffness Method, with reference to $D_{t_{max}}$ from Fig. 8.44*a* and *b,* the peak load, T_{max} (lb/ft), in each reinforcement layer can be calculated with the procedure summarized below (Allen and Bathurst, 2001):

$$T_{max} = 0.5\, S_v K_0 \gamma\, (H + S)\, D_{t_{max}} \Phi_{local}\, \Phi_{fb} \Phi_{fs}\, 0.27 \left(\frac{S_{global}}{P_a} \right)^{0.24} \tag{8.16}$$

where S_v = tributary height (ft) (assumed equivalent to the average vertical spacing of the reinforcement at each layer location when analyses are carried out per unit length of wall)
K_0 = at-rest lateral earth pressure coefficient for the reinforced backfill
γ = unit weight of fill material (lb/ft^3)
H = vertical wall height at the wall face (ft)
S = average soil surcharge height above wall top (ft)
$D_{t_{max}}$ = distribution factor to estimate T_{max} for each layer as a function of its depth below the wall top relative to T_{mxmx} (the maximum value of T_{max} within the wall)
S_{global} = global reinforcement stiffness (lb/ft^2)
Φ_{local} = local stiffness factor

www.EngineeringEBooksPdf.com

Φ_{fb} = facing batter factor
Φ_{fs} = facing stiffness factor
P_a = atmospheric pressure (a constant to preserve dimensional consistency equal to 2110 lb/ft^2 for the indicated units)

S_{global}, Φ_{local}, Φ_{fb}, Φ_{fs}, and $D_{t_{max}}$ are further defined below.

K_0 can be determined from the coefficient of lateral at-rest earth pressure for normally consolidated soil:

$$K_0 = 1 - \sin \Phi' \tag{8.17}$$

where Φ' (degrees) is the peak angle of internal soil friction for the wall backfill. For steel reinforced systems, K_0 for design should be 0.3 or greater. This equation for K_0 has been shown to work reasonably well for normally consolidated sands, and can be modified by using the overconsolidation ratio (OCR) for sand that has been preloaded or compacted. However, because the OCR is very difficult to estimate for compacted sands, especially at the time of wall design, the K_0-Stiffness Method was calibrated using only Eq. (8.17) to determine K_0. Because the K_0-Stiffness Method is empirically based, it can be argued that the method implicitly includes compaction effects, and therefore modification of Eq. (8.17) to account for compaction is not necessary. Note also that the method was calibrated using measured peak shear strength data corrected to peak plane strain shear strength values.

Global stiffness S_{global} considers the stiffness of the entire wall section, and is calculated as follows:

$$S_{global} = \frac{J_{ave}}{H/n} = \frac{\text{sum of } J_i}{H} \tag{8.18}$$

where J_{ave} (lb/ft) is the average modulus of all reinforcement layers within the entire wall section, J_i (lb/ft) is the modulus of an individual reinforcement layer, H is the total wall height, and n is the number of reinforcement layers within the entire wall section.

Local stiffness S_{local} (lb/ft^2) considers the stiffness and reinforcement density at a given layer, and is calculated as follows:

$$S_{local} = \frac{J}{S_v} \tag{8.19}$$

where J is the modulus of an individual reinforcement layer, and S_v is the vertical spacing of the reinforcement layers near a specific layer.

The local stiffness factor Φ_{local} is defined as

$$\Phi_{local} = \left(\frac{S_{local}}{S_{global}}\right)^a \tag{8.20}$$

where a is a coefficient that is also a function of stiffness. Observations from available data suggest that setting $a = 1.0$ for geosynthetic-reinforced walls and $a = 0.0$ for steel-reinforced soil walls is sufficiently accurate.

The wall face batter factor Φ_{fb} which accounts for the influence of the reduced soil weight on reinforcement loads, is determined as follows:

$$\Phi_{fb} = \left(\frac{K_{abh}}{K_{avh}}\right)^d \tag{8.21}$$

www.EngineeringEBooksPdf.com

where K_{abh} is the horizontal component of the active earth pressure coefficient accounting for wall face batter, K_{avh} is the horizontal component of the active earth pressure coefficient, and d is a constant coefficient (recommended to be 0.5 to provide the best fit to the empirical data). The wall is assumed to be vertical.

The facing stiffness factor Φ_{fs} was empirically derived to account for the significantly reduced reinforcement stresses observed for geosynthetic walls with segmental concrete block and propped panel wall facings. It is not yet known whether this facing stiffness correction is fully applicable to steel-reinforced wall systems. On the basis of data available, Allen and Bathurst (2001) recommend that this value be set equal to the following:

0.5 for segmental concrete block and propped panel faced walls

1.0 for all other types of wall facings (e.g., wrapped face, welded wire or gabion faced, and incremental precast concrete facings)

1.0 for all steel-reinforced soil walls

Note that the facings defined above as flexible still have some stiffness and some ability to take a portion of the load applied to the wall system internally. It is possible to have facings that are more flexible than the types listed above, and consequently walls with very flexible facings may require a facing stiffness factor greater than 1.0.

The maximum wall heights available where the facing stiffness effect could be observed were approximately 20 ft (6 m). Data from taller walls were not available. It is possible that this facing stiffness effect may not be as strong for much taller walls. Therefore, caution should be exercised when using those preliminary Φ_{fs} values for walls taller than 20 ft (6 m). Detailed background information as well as several numerical examples for both steel and geosynthetic reinforced soil walls are provided by Allen and Bathurst (2001).

The following is a numerical example of applying the preceding equations for the evaluation of T_{max} at reinforcing layers 4 ft (1.2 m), 10 ft (3 m), and 18 ft (5.5 m) from the top of the wall.

- *Design assumptions*
  A 20-ft-high (6-m) segmental concrete block MSE wall has a vertical facing and 10 layers (2-ft or 0.6 m uniform spacing) of the same grade polyester (PET) geogrid reinforcements. Thus, $H = 20$ ft (6 m), $\Phi_{fs} = 0.5$, $n = 10$, $S_v = 2$ ft (0.6 m), and $J_{ave} = 28{,}780$ lb/ft (420 kN/m) for PET. Since the wall is vertical, $K_{abh}/K_{avh} = 1.0$. The wall has a 2-ft earth surcharge, soil with 125 lb/ft^3 unit weight, and 34° peak soil friction angle. Thus, $S = 2$ ft, $\gamma = 125$ lb/ft^3, $\Phi = 34°$, and $P_a = 101$ kPa = 101 kN/m^2 = 2110 lb/ft^2.

- *Computations*
  From Eq. (8.17), $K_0 = 1 - \sin 34° = 0.441$.
  From Eq. (8.18), $S_{global} = (28{,}780)/(20/10) = 14{,}390$ lb/ft^2.
  From Eq. (8.19), $S_{local} = 28{,}780/2 = 14{,}390$ lb/ft^2.
  From Eq. (8.20), $\Phi_{local} = (14{,}390/14{,}390)^1 = 1.0$.
  From Eq. (8.21), $\Phi_{fb} = (1.0)^{0.5} = 1.0$.
  From Eq. 8.16, for the K_0-Stiffness Method, $T_{max} = 0.5\ (S_v)(0.441)(125)(20 + 2)(D_{t_{max}})(1.0)\ (1.0)(0.5)(0.27)(14{,}390/2110)^{0.24} = (129.8)(S_v)(D_{t_{max}})$.
  Next, evaluate T_{max} at distances Z from the top of the wall, obtaining the distribution factor $D_{t_{max}}$ from Fig. 8.44 for each Z/H ratio: At 4 ft, $Z/H = 0.2$, $D_{t_{max}} = 0.733$, $T_{max} = 95.1\ (S_v)$ lb/ft^2 = 190.2 lb/ft; at 10 ft, $Z/H = 0.5$, $D_{t_{max}} = 1.00$, $T_{max} = 129.8\ (S_v)$ lb/ft^2 = 259.6 lb/ft; and at 18 ft, $Z/H = 0.9$, $D_{t_{max}} = 0.60$, $T_{max} = 83.8\ (S_v)$ lb/ft^2 = 167.6 lb/ft.

www.EngineeringEBooksPdf.com

If the results for this example are compared with those obtained by the AASHTO method (Art. 8.5.11), it will be seen that the total required reinforcement forces for the K_0-Stiffness Method are only about one-quarter of those for the AASHTO method.

With the assumption that all the 10 reinforcement layers have the same stiffness, the calculation of reinforcement forces demonstrated above is a first trial. The global stiffness factor (S_{global}) should be revised according to the actual reinforcing stiffness distribution. To avoid the iterative nature of the K_0-Stiffness Method, Allen and Bathurst (2001) also provide a simplified methodology with different combined global stiffness curves according to the type of reinforcing material as well as the height of wall.

8.6 NONGRAVITY CANTILEVERED WALL DESIGN

Nongravity cantilevered walls are those that provide lateral resistance through vertical elements embedded in soil, with the retained soil between the vertical elements usually supported by facing elements. Such walls may be constructed of concrete, steel, or timber. Their height is usually limited to about 15 ft (4.6 m), unless provided with additional support anchors.

8.6.1 Earth Pressure and Surcharge Loads

Lateral earth pressure can be estimated assuming wedge theory using a planar surface of sliding as defined by Coulomb's theory. For permanent walls, effective stress methods of analysis and drained shear strength parameters for soils can be used for determining lateral earth pressures. Alternatively, the simplified earth pressure distributions shown in Figs. 8.45 and 8.46 can be used. Nomenclature and notes for Fig. 8.45 are given in Table 8.8.

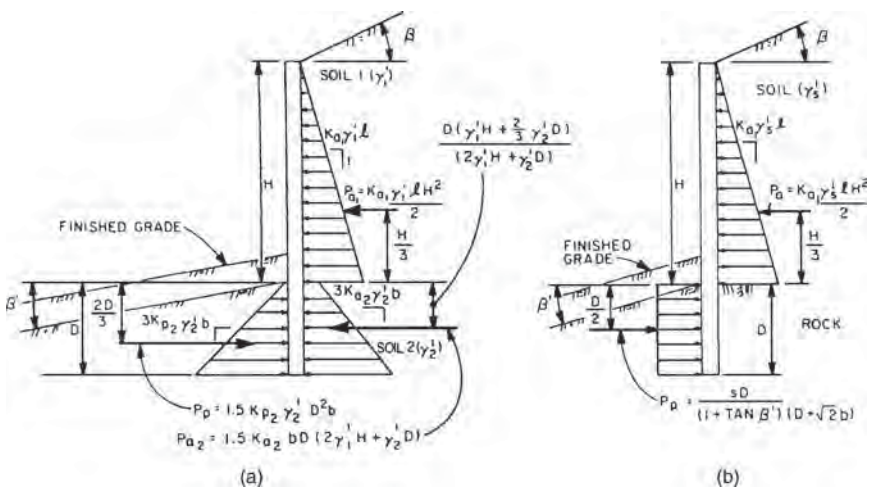

FIGURE 8.45 Simplified earth pressure distributions for permanent flexible cantilevered walls with discrete vertical wall elements. (*a*) Embedment in soil; (*b*) embedment in rock. *Note:* Refer to Table 8.8 for general notes and legend. (*From* Standard Specifications for Highway Bridges, *2002, American Association of State Highway and Transportation Officials, Washington, D.C., with permission*)

www.EngineeringEBooksPdf.com

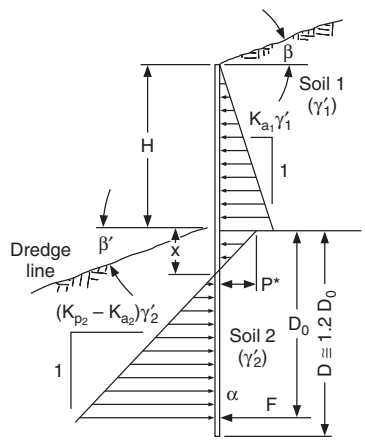

(a) Pressure distribution

1. Determine the active earth pressure on the wall due to surchage loads, the retained soil, and differential water pressure above the dredge line.
2. Determine the magnitude of active pressure at the dredge line (P*) due to surcharge loads, retained soil, and differential water pressure, using the earth pressure coefficient K_{a2}.
3. Determine the value of $x = P^*/[(K_{p2} - K_{a2})\gamma'_2]$ for the distribution of net passive pressure in front of the wall below the dredge line.
4. Sum moments about the point of action of F to determine the embedment (D_0) for which the net passive pressure is sufficient to provide equilibrium.
5. Determine the depth (point α) at which the shear in the wall is zero (i.e., the point at which the areas of the driving and resisting pressure diagrams are equivalent).
6. Calculate the maximum bending moment at the point of zero shear.
7. Calculate the design depth, $D = 1.2\ D_0$ to $1.4\ D_0$, for a safety factor of 1.5 to 2.0.

(b) Simplified design procedure

Notes: (1) Surcharge and water pressures must be added to the above earth pressures.
(2) Forces shown are per horizontal foot of vertical wall element.

FIGURE 8.46 Simplified earth pressure distributions and design procedures for permanent flexible cantilevered walls with continuous vertical wall elements. (*From* Standard Specifications for Highway Bridges, *2002, American Association of State Highway and Transportation Officials, Washington, D.C., with permission*)

For temporary applications in cohesive soils, total stress methods of analysis and undrained shear strength parameters apply. The simplified earth pressure distributions shown in Figs. 8.46 and 8.47 can alternatively be used with the following limitations:

1. The ratio of overburden pressure to undrained shear strength must be less than 3. This ratio is referred to as the stability number $N = \gamma H/c$.
2. The active earth pressure must not be less than 0.25 times the effective overburden pressure at any depth.

Nomenclature and notes for Fig. 8.47 are given in Table 8.8.

Where discrete vertical wall elements are used for support, the width of each vertical element should be assumed to equal the width of the flange or diameter of the element for driven sections, and to equal the diameter of the concrete-filled hole for sections encased in concrete.

For permanent walls, Figs. 8.45 and 8.46 show the magnitude and location of resultant loads and resisting forces for discrete vertical elements embedded in soil and rock. The procedure for determining the resultant passive resistance of a vertical element assumes that net passive resistance is mobilized across a maximum of 3 times the element width or diameter (reduced, if necessary, to account for soft clay or discontinuities in the embedded depth of soil or rock). Also, a depth of 1.5 times the width of an element in soil, and 1 ft (300 mm) for an element in rock, is ineffective in providing passive lateral support.

www.EngineeringEBooksPdf.com

TABLE 8.8 General Notes and Legend for Simplified Earth Pressure Distributions for Permanent and Temporary Flexible Cantilevered Walls with Discrete Vertical Wall Elements, Figs. 8.45 and 8.47

Legend:

γ' = effective unit weight of soil
b = vertical element width
l = spacing between vertical wall elements, center to center
S_u = undrained shear strength of cohesive soil
s = shear strength of rock mass
P_p = passive resistance per vertical wall element
P_a = active earth pressure per vertical wall element
β = ground surface slope behind wall } + for slope up from wall
β' = ground surface slope in front of wall } − for slope down from wall
K_a = active earth pressure coefficient; refer to Art. 8.2.3
K_p = passive earth pressure coefficient; refer to *Standard Specifications for Highway Bridges,* AASHTO, 2002.
ϕ' = effective angle of soil friction

Notes:

1. For temporary walls embedded in granular soil or rock, refer to Fig. 8.45 to determine passive resistance and use diagrams on Fig. 8.47 to determine active earth pressure of retained soil.
2. Surcharge and water pressures must be added to the indicated earth pressures.
3. Forces shown are per vertical wall element.
4. Pressure distributions below the exposed portion of the wall are based on an effective element width of $3b$, which is valid for $l \geq 5b$. For $l < 5b$, refer to Figs. 8.46 and 8.48 for continuous wall elements to determine pressure distributions on embedded portions of the wall.

Source: From *Standard Specifications for Highway Bridges,* 2002, American Association of State Highway and Transportation Officials, Washington, D.C., with permission.

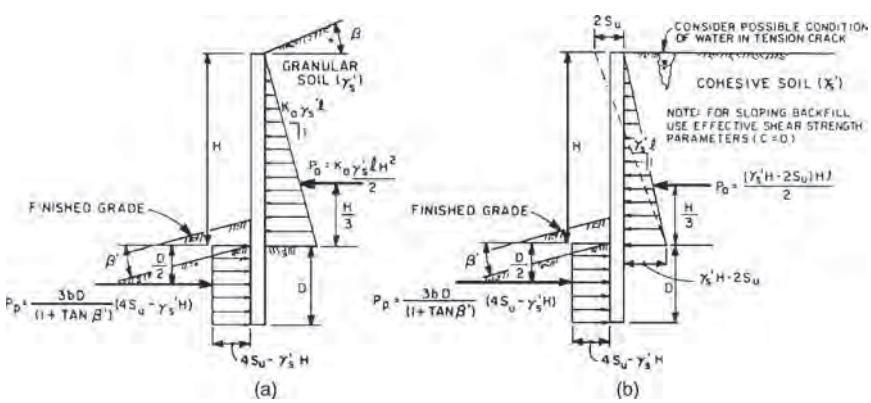

FIGURE 8.47 Simplified earth pressure distributions for temporary flexible cantilevered walls with discrete vertical wall elements. (*a*) Embedment in cohesive soil retaining granular soil; (*b*) embedment in cohesive soil retaining cohesive soil. *Note:* Refer to Table 8.8 for general notes and legend. (*From* Standard Specifications for Highway Bridges, *2002, American Association of State Highway and Transportation Officials, Washington, D.C., with permission*)

www.EngineeringEBooksPdf.com

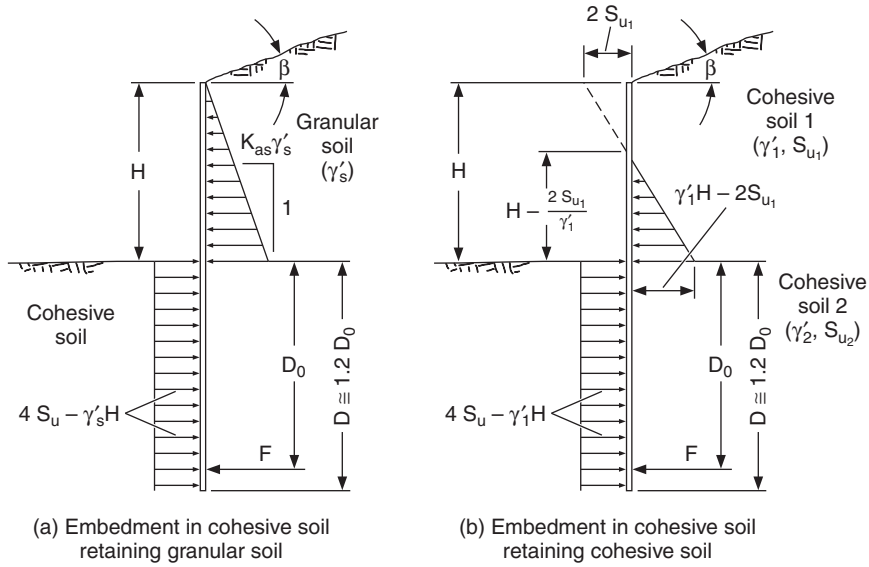

Notes: (1) For walls embedded in granular soil, refer to Fig. 8.46 and use above diagram for retained cohesive soil when appropriate.

(2) Surface and water pressures must be added to the above earth pressures.

(3) Forces shown are per horizontal foot of vertical wall element.

FIGURE 8.48 Simplified earth pressure distributions for temporary flexible cantilevered walls with continuous vertical wall elements. (*From* Standard Specifications for Highway Bridges, *2002*, *American Association of State Highway and Transportation Officials, Washington, D.C., with permission*)

The design lateral pressure must include lateral pressure due to traffic, permanent point and line surcharge loads, backfill compaction, or other types of surcharge loads, as well as the lateral earth pressure.

8.6.2 Water Pressure and Drainage

Flexible cantilevered walls must be designed to resist the maximum anticipated water pressure. For a horizontal static groundwater table, the total hydrostatic water pressure can be determined from the hydrostatic head by the traditional method. For differing groundwater levels on opposite sides of the wall, the water pressure and seepage forces can be determined by net flow procedures or other methods. Seepage can be controlled by installation of a drainage medium. Preformed drainage panels, sand or gravel drains, or wick drains can be placed behind the facing with outlets at the base of the wall. It is important that drainage panels maintain their function under design earth pressures and surcharge loadings. AASHTO requires that they extend from the base of the wall to a level 1 ft (300 mm) below the top of the wall.

Where thin drainage panels are used behind walls, saturated or moist soil behind the panels may be subject to freezing and expansion. In such cases, insulation can be provided on the walls to prevent soil freezing or the wall can be designed for the pressures that may be exerted on it by frozen soil.

www.EngineeringEBooksPdf.com

8.6.3 Structure Dimensions and External Stability

Flexible cantilevered walls should be dimensioned to ensure stability against passive failure of embedded vertical elements using a factor of safety of 1.5 based on unfactored loads. Vertical elements must be designed to support the full design earth, surcharge, and water pressures between the elements. In determining the depth of embedment to mobilize passive resistance, consideration should be given to planes of weakness (such as "slickensides," bedding planes, and joint sets) that could reduce the strength of the soil or rock from that determined by field or laboratory tests. AASHTO recommends that for embedment in intact rock, including massive to appreciably jointed rock, which should not be allowed to fail through a joint surface, design should be based on an allowable shear strength of 0.10 to 0.15 times the uniaxial compressive strength of the intact rock.

8.6.4 Structure Design

Structural design of individual wall elements may be performed by service load or load factor design methods.

The maximum spacing L between vertical supporting elements depends on the relative stiffness of the vertical elements and facing, the design pressure P_a, and the type and condition of soil to be supported. Design the facing for the bending moment M_{max} at any level, as determined by the following equations:

Simple span (*no soil arching*)*:*

$$M_{max} = \frac{P_a L^2}{8} \tag{8.22}$$

Simple span (*soil arching*)*:*

$$M_{max} = \frac{P_a L^2}{12} \tag{8.23}$$

Continuous:

$$M_{max} = \frac{P_a L^2}{10} \tag{8.24}$$

Equation (8.22) is applicable for simply supported facings where the soil will not arch between vertical supports (e.g., in soft cohesive soils or for rigid concrete facing placed tightly against the in-place soil). Equation (8.23) is applicable for simply supported facings where the soil will arch between vertical supports (e.g., in granular or stiff cohesive soils with flexible facing, or rigid facing behind which there is sufficient space to permit the in-place soil to arch). Equation (8.24) is applicable for facings that are continuous over several vertical supports (e.g., reinforced shotcrete).

8.6.5 Overall Stability

The overall stability of slopes in the vicinity of walls is considered part of the design of retaining walls. The overall stability of the retaining wall, retained slope, and foundation soil or rock can be evaluated for all walls using limiting equilibrium methods of analysis. AASHTO gives the following requirements:

www.EngineeringEBooksPdf.com

A minimum factor of safety of 1.3 shall be used for walls designed for static loads, except the factor of safety shall be 1.5 for walls that support abutments, buildings, critical utilities, or other installations with a low tolerance for failure. A minimum factor of safety of 1.1 shall be used when designing walls for seismic loads. In all cases, the subsurface conditions and soil/rock properties of the wall site shall be adequately characterized through in-situ exploration and testing and/or laboratory testing…

8.6.6 Corrosion Protection

Prestressed anchors and anchor heads must be protected against corrosion that would result from ground and groundwater conditions at the site. The level of corrosion protection depends on both the ground environment and the potential consequences of an anchor failure. Also, anchors for permanent walls require a higher level of corrosion protection than those for temporary walls.

8.7 ANCHORED WALL DESIGN

Anchored walls are made up of the same elements as cantilevered walls but are furnished with one or more tiers of anchors for additional lateral support. Anchors may be either prestressed or dead-man type. Tendons or bars extend from the wall face to a region beyond the active zone where they are grouted in place or mechanically anchored. Such walls are typically constructed from the top down in cut situations rather than fill conditions. Figure 8.49 illustrates an anchored wall and defines terminology.

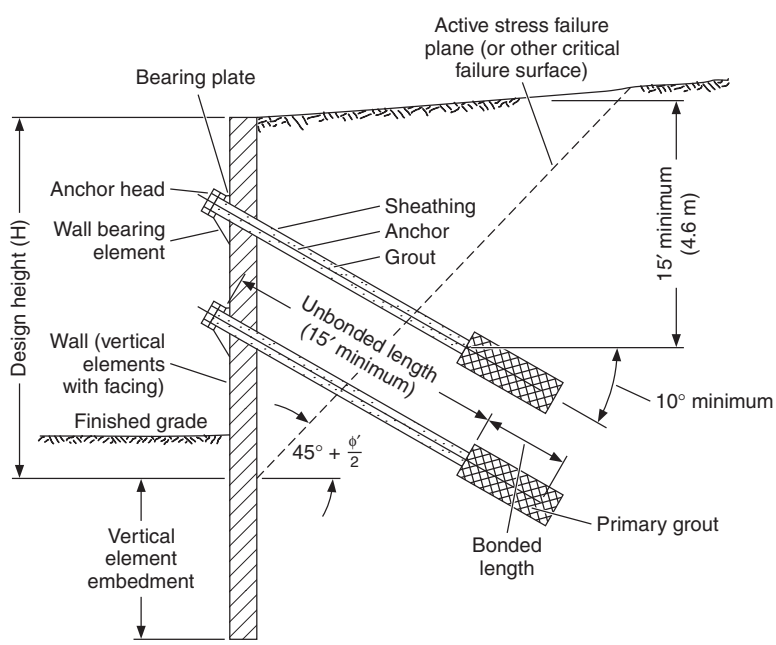

FIGURE 8.49 Terms used in flexible anchored wall design. (*From* Standard Specifications for Highway Bridges, *2002, American Association of State Highway and Transportation Officials, Washington, D.C., with permission*)

www.EngineeringEBooksPdf.com

8.7.1 Earth Pressure and Surcharge Loadings

The choice of lateral earth pressures used for design should take into account the method and sequence of construction, rigidity of the wall-anchor system, physical characteristics and stability of the ground mass to be supported, allowable wall deflections, space between anchors, anchor prestress, and potential for anchor yield. For stable ground masses, the final lateral earth pressures on a completed wall with two or more levels of anchors constructed from the top down can be calculated using the apparent earth pressure distributions shown in Fig. 8.50. For unstable or marginally stable ground masses, design earth pressures will be greater than those shown in Fig. 8.50. Therefore, loads

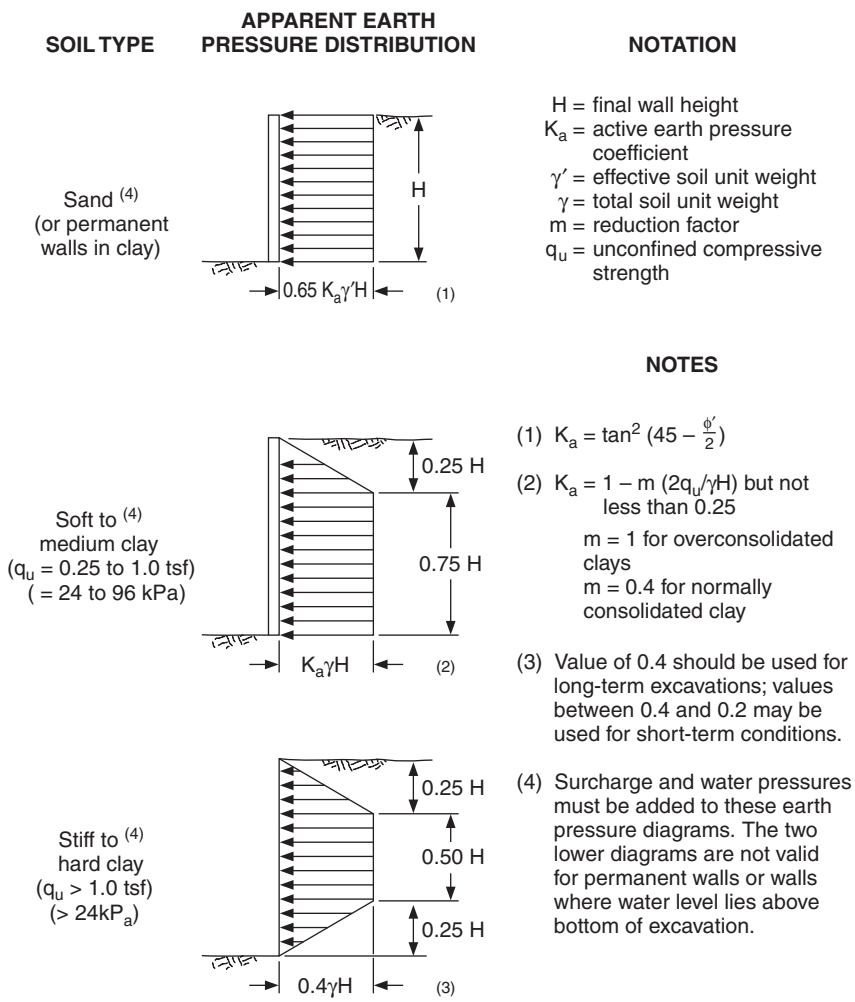

FIGURE 8.50 Guidelines for estimating earth pressures on walls with two or more levels of anchors constructed from the top down. (*From* Standard Specifications for Highway Bridges, *2002, American Association of State Highway and Transportation Officials, Washington, D.C., with permission*)

www.EngineeringEBooksPdf.com

should be estimated using methods of slope stability analysis that include the effects of anchors, or that consider "interslice" forces.

In developing design earth pressures, consideration should be given to wall displacements that may affect adjacent structures or underground utilities. Rough estimates of settlement adjacent to braced or anchored flexible walls can be made using Fig. 8.51. If wall deflections estimated using Fig. 8.51 are excessive, a more detailed analysis can be made using beam-on-elastic-foundation, finite element, or other methods of analysis that consider soil-structure interaction effects. Where a structure or utility particularly sensitive to settlement is located close to a wall, wall deflections should be calculated on the basis of the loading, soil properties, anchor spacing, and wall element stiffness.

The distribution of earth pressure loading for anchored walls with one level of anchors can be assumed to be triangular and to be based on a lateral earth pressure coefficient (i.e., K_a, K_0, or K_p) consistent with the expected wall deflection. To consider the case where excavation has advanced down to the first anchor level but the anchors have not yet been installed, the wall can be treated as a nongravity cantilevered wall and the earth pressure distribution assumed triangular. Overstressing of anchors

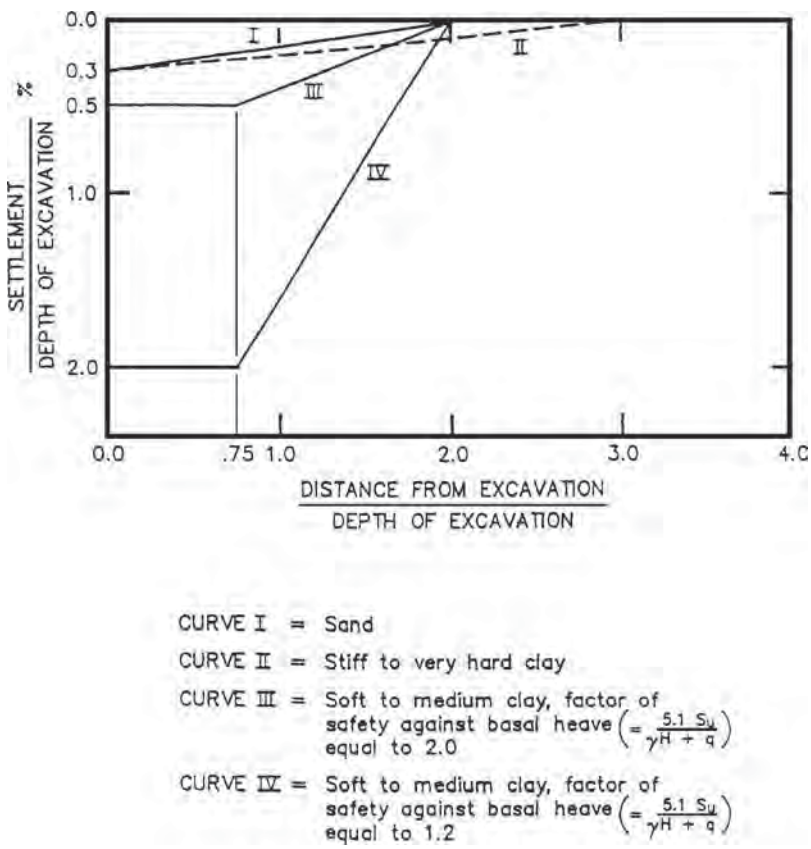

FIGURE 8.51 Settlement profiles behind braced or anchored walls. (*From* Standard Specifications for Highway Bridges, *2002*, *American Association of State Highway Officials, Washington, D.C., with permission*)

www.EngineeringEBooksPdf.com

should be avoided, because excessive anchor loads, relative to the capacity of the retained ground mass, can cause undesirable deflections, or passive failure of the wall into the retained soil. As with other walls, design lateral pressures for walls constructed from the top down must include the lateral pressure due to traffic or other surcharge loading.

Where there is no anchor level or only one, the magnitude and distribution of lateral resisting forces for embedded vertical elements in soil or rock can be determined as described in Art. 8.6.1. When two or more levels of anchors have been installed, the lateral resistance provided by embedded vertical elements will depend on the element stiffness and deflection under load.

Earth pressures on anchored walls constructed from the bottom up (fill construction) are affected by the construction method and sequence. These must be well specified, and the basis for lateral earth pressures fully documented. For walls with a single anchor level, consider a triangular distribution, defined by $K_a\gamma$ per unit length of wall height, plus surcharge loads. For walls with multiple anchor levels, consider a rectangular pressure distribution, derived by increasing the total force from the triangular pressure distribution just described by one-third and applying the force as a uniform pressure distribution.

Drainage considerations for anchored walls are similar to those discussed in Art. 8.6.2.

8.7.2 Structure Dimensions and External Stability

The design of anchored walls involves a determination of several factors. Included are the size, spacing, and depth of embedment of vertical wall elements and facing; the type, capacity, spacing, depth, inclination, and corrosion protection of anchors; and the structural capacity and stability of the wall, wall foundation, and surrounding soil mass for all intermediate and final stages of construction. The bearing capacity and settlement of vertical wall elements under the action of the vertical component of the anchor forces and other vertical loads must also be evaluated.

AASHTO provides the following guidance:

> For walls supported in or through soft clays with $S_u < 0.3\gamma' H$, continuous vertical elements extending well below the exposed base of the wall may be required to prevent heave in front of the wall. Otherwise, the vertical elements are embedded several feet as required for stability or end bearing. (Where significant embedment of the wall is required to prevent bottom heave, the lowest section of wall below the lowest row of anchors must be designed to resist the moment induced by the pressure acting between the lowest row of anchors and the base of the exposed wall, and the force $P_b = 0.7(\gamma H B_e - 1.4cH - \pi c B_e)$ acting at the mid-height of the embedded depth of the wall.)

In the above, the following definitions apply:

B_e = width of excavation perpendicular to wall
c = cohesion of soil
H = design wall height
S_u = undrained shear strength of cohesive soil
γ = soil unit weight
γ' = effective unit weight of soil

8.7.3 General Design Procedures for Anchored Walls

For a typical wall with two or more rows of anchors constructed from the top down, the general procedure is to (1) design for the final condition with multiple rows of anchors and

www.EngineeringEBooksPdf.com

(2) check the design for the various stages of construction. The required horizontal component of each anchor force can be calculated using apparent earth pressure distributions such as given in Fig. 8.50. Any other applicable forces such as horizontal water pressure, surcharge, or seismic forces must be included where applicable. The anchor inclination must be considered in calculating the anchor force. The horizontal anchor spacing and anchor capacity must provide the required total anchor force.

Vertical wall elements must be designed to resist all applicable forces such as horizontal earth pressure, surcharge, water pressure, and anchor and seismic loadings, as well as the vertical component of earth pressure due to wall friction and the vertical component of anchor loads and any other vertical loads. In the analysis, supports may be assumed at each anchor location and at the bottom if the vertical element extends below the bottom of the wall.

All components should be checked for the various earth pressure distributions and other loading conditions that may exist during construction.

8.7.4 Anchor Design

Anchor design includes the selection of a feasible anchor system, estimation of anchor capacity, determination of unbonded length, and consideration of corrosion protection. In determining the feasibility of employing anchors at a particular location, considerations include the availability of underground easements, proximity of buried facilities to anchor locations, and the suitability of subsurface soil and rock conditions within the anchor stressing zone.

Ultimate anchor capacity per unit length may be estimated from Tables 8.9 and 8.10 for soil and rock, respectively. The values are based on straight-shaft anchors

TABLE 8.9 Ultimate Values of Load Transfer for Preliminary Design of Anchors in Soil

Soil type	Relative density or consistency*	Estimated ultimate transfer load, kips per lineal foot (N/mm)
Sand and gravel	Loose	10 (1.46)
	Medium dense	15 (2.19)
	Dense	20 (2.92)
Sand	Loose	7 (1.02)
	Medium dense	10 (1.46)
	Dense	13 (1.90)
Sand and silt	Loose	5 (0.73)
	Medium dense	7 (1.02)
	Dense	9 (1.31)
Silt-clay mixture with minimum LL, PI, and LI restrictions, or fine micaceous† sand or silt mixtures	Stiff	2 (0.29)
	Hard	4 (0.58)

*Values corrected for overburden pressure.

†The presence of mica tends to increase the volume and compressibility of sand and soft deposits due to bridging action and subsequent flexibility under increased pressures.

Source: From *Standard Specifications for Highway Bridges,* 2002, American Association of State Highway and Transportation Officials, Washington, D.C., with permission.

www.EngineeringEBooksPdf.com

TABLE 8.10 Ultimate Values of Load Transfer for Preliminary Design of Anchors in Rock

Rock type	Estimated ultimate transfer load, kips per lineal foot (N/mm)
Granite or basalt	50 (7.30)
Dolomitic limestone	40 (5.84)
Soft limestone	30 (4.38)
Sandstone	30 (4.38)
Slates and hard shales	25 (3.65)
Soft shales	10 (1.46)

Source: From *Standard Specifications for Highway Bridges*, 2002, American Association of State Highway and Transportation Officials, Washington, D.C., with permission.

installed in small-diameter holes using a low grout pressure. Other anchor types and installation procedures may result in different anchor capacities. Allowable anchor capacity for small-diameter anchors may be estimated by multiplying the ultimate anchor capacity per unit length by the bonded (or stressing) length and dividing by a factor of safety. AASHTO suggests 2.5 for anchors in soil and 3.0 for anchors in rock.

Bearing elements for anchors must be designed so that shear stresses in the vertical wall elements and facing are within allowable limits. The capacity of each anchor should be verified as part of a stressing and testing program.

Determination of the unbonded anchor length should consider the location of the critical failure surface farthest from the wall, the minimum length required to ensure minimal loss of anchor prestress due to long-term ground movements, and the depth to adequate anchoring strata. As shown in Fig. 8.49, the unbonded (or free) anchor length should not be less than 15 ft (4.6 m) and should extend 5 ft (1.5 m) or one-fifth of the design wall height, whichever is greater, beyond the critical failure surface in the soil mass being retained by the wall. For granular soils or drained cohesive soils, the critical failure surface is typically assumed to be the active failure wedge. This wedge is defined by a plane extending upward from the base of the wall at an angle of $45° + \phi'/2$ from the horizontal, where ϕ' is the effective angle of soil friction. Longer free lengths may be required for anchors in plastic soils or where critical failure surfaces are defined by planes or discontinuities with other orientations.

Selection of anchor inclination should consider the location of suitable soil or rock strata, the presence of buried utilities or other geometric constraints, and constructibility of the anchor drill holes. AASHTO suggests that anchors be located on a minimum inclination of 10° below horizontal and the bonded zone be located a minimum depth of 15 ft (4.6 m) below the ground surface. The component of vertical load resulting from anchor inclination must be included in evaluating the end bearing and settlement of vertical wall elements.

AASHTO suggests that the minimum horizontal spacing of anchors be either 3 times the diameter of the bonded zone or 4 ft (1.2 m), whichever is larger. If small spacings are required, consideration can be given to different anchor inclinations between alternating anchors.

www.EngineeringEBooksPdf.com

8.8 SOIL NAILED STRUCTURES

8.8.1 Development and General Considerations

Figure 8.52 shows a cross-section of the first soil nailed wall, which was a temporary wall built in France (1972–1973) for a railroad project. Such walls are constructed from the top down during excavation. Reinforcing bars are either inserted in drilled holes and grouted into place, or driven into place. Then a facing of cast-in-place concrete or shotcrete is installed as the work progresses.

The wall in France was built in Fontainebleau sand using a high density of short nails of two different lengths: 13 ft (4 m) for nails in the upper portion of the wall and 20 ft (6 m) for those in the lower portion. The first full-size experimental wall was constructed in Germany in 1979 using grouted nails and loaded to failure. In 1981, a prefabricated-concrete-facing soil nailed wall was used in a commercial application in France. An extensive national research project conducted in France during the years 1986–1990 resulted in a noted publication titled *Recommendations Clouterre.*

A soil nailed wall is constructed as an integral part of the construction of an excavation as illustrated in Fig. 8.53. (See Art. 8.8.7.) The soil is reinforced as the slope excavation progresses. Reinforcement generally consists of bars inserted parallel to one another and placed at a downward-sloping angle. The bars are inserted in a passive state; however, as the skin friction between the soil and the nails is mobilized, the nails are placed into tension. Figure 8.54 compares the action of soil nails and ground anchors.

The work is carried out from the top downward in increments, gradually building up a reinforced soil mass. Some type of facing is generally necessary to keep the soil from caving between the soil nails. In the case of the Fontainebleau sand (effective friction angle of 38° and some cohesion), the distance for stability of the excavation

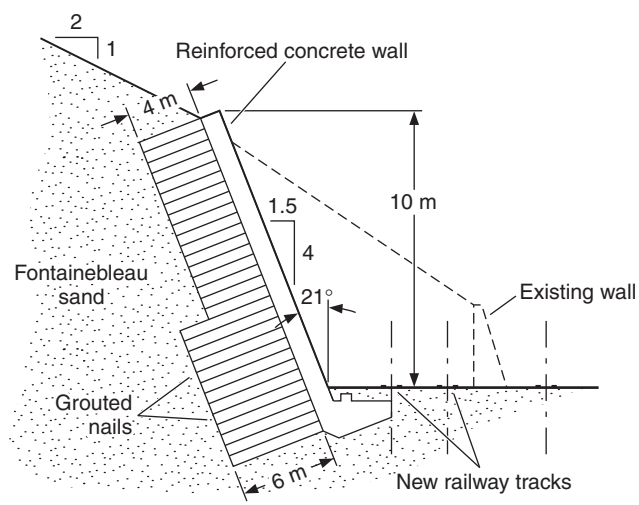

FIGURE 8.52 First soil nailed wall, constructed at Versailles, France, 1972–1973. (*F. Schlosser, Behavior and Design of Soil Nailing,* Proceedings of Symposium on Soil and Rock Improvement Techniques, *Bangkok, 1982, with permission*)

www.EngineeringEBooksPdf.com

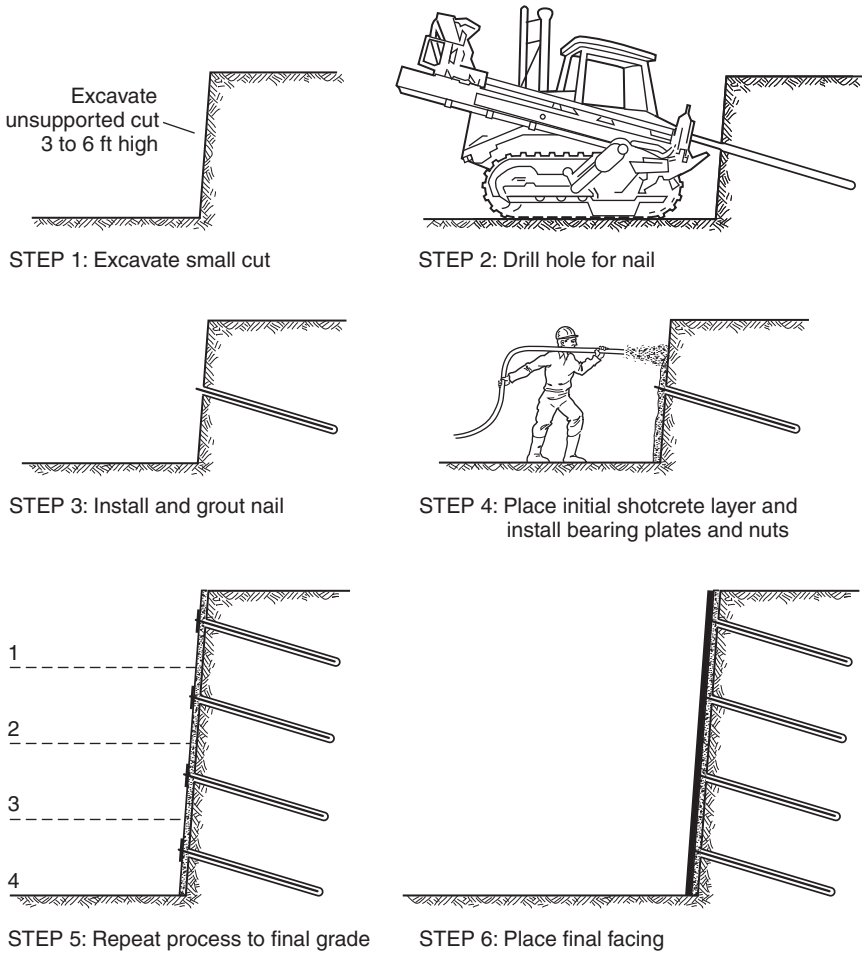

FIGURE 8.53 Typical construction sequence for soil nailed wall.

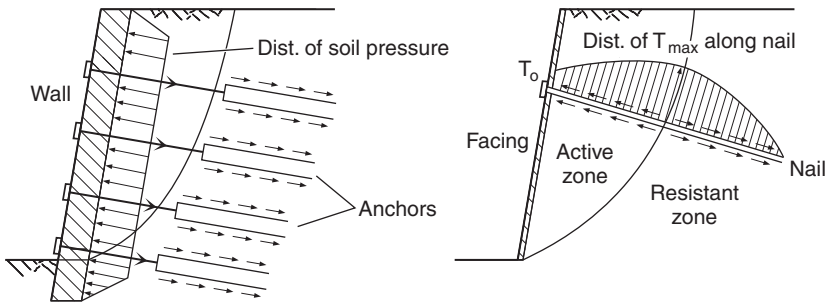

FIGURE 8.54 Resisting forces for (*left*) ground anchors and (*right*) soil nails.

www.EngineeringEBooksPdf.com

between soil nails was about 6.6 ft (2 m) with failure occurring at about 9.8 ft (3 m). The sand between the nails will slough until an "arching" action occurs within the soil. The point where this action can no longer occur because the internal friction capacity of the soil has been exceeded defines the temporary facing limit.

The concept of soil nailing has not been patented, nor is it patentable; however, numerous technologies have been patented. For soil nail walls to be cost-effective, the ground must be capable of standing unsupported while the nails and shotcrete are installed. The success of soil nail walls depends upon:

1. Selection of good applications in ground suitable for nailing
2. Ability to quickly respond to changed ground conditions
3. Use of a rational design procedure for the wall and each of its components
4. Use of good construction specifications
5. Ability of the owner and contractor to work together in a partnering concept
6. Handling of work performance on-site by knowledgeable personnel representing each of the parties, including the owner

8.8.2 Suitable Soils

Most research to date has been done in homogeneous soils. However, there is no reason why the concept cannot be applied to heterogeneous soil masses if proper consideration of soil properties is made and rationally applied to the selection of nail length and spacing.

To be economical, soil nailed walls should be constructed in ground that can stand unsupported on a vertical or steeply sloped cut of 3 to 6 ft (1 to 2 m) for one to two days, and can maintain an open drill hole for a few hours. Soils considered favorable to soil nailing are as follows:

1. Naturally cohesive materials (silts and low-plasticity clays that are not prone to creep)
2. Naturally cemented sands and gravels
3. Weathered rock
4. Fine to medium, homogeneous sand with capillary cohesion of 60 to 100 lb/ft^2 (2.9 to 4.8 kPa) associated with a water content of at least 5 to 6 percent

According to FHWA Report RD-89-108, soil nailing is generally *not* considered cost-effective or applicable in the following soils:

1. Loose granular soils with field standard penetration N values lower than about 10 or relative densities of less than 30 percent
2. Granular cohesionless soils of uniform size (poorly graded) with uniformity coefficient (D_{60}/D_{10}) less than 2, unless found to be very dense; nailing of these soils may be impractical because of the necessity of stabilizing the cut face (by grouting or another permanent technique) prior to excavation
3. Soft cohesive soils with undrained shear strengths of less than 500 lb/ft^2 (24 kPa), because of the inability to develop adequate pullout resistance
4. Highly plastic clays (LL $>$ 50 and PI $>$ 20 percent), because of their potential for excessive creep deformation
5. Expansive (swelling) and highly frost-susceptible soils

www.EngineeringEBooksPdf.com

Soil nailing is also *not* recommended for the following conditions:

1. In ground with water pressure present at the face
2. Below the groundwater table, unless the slope can be effectively dewatered prior to excavation
3. Loose fill, granular soil with no apparent cohesion

8.8.3 Comparison with MSE Walls

Soil nailed walls have some similarities with MSE walls but also some fundamental differences. The main *similarities* are:

1. The major mechanism in both MSE and soil nailed retaining structures is the development of tensile forces in the reinforcements due to frictional interaction and, consequently, restrainment of lateral deformations of the structures.
2. The reinforced soil mass is separated into two zones based on the points of maximum tension in the reinforcement (Fig. 8.54): an "active" zone close to the facing, where the shear stresses exerted on the surface of the reinforcement are directed outward and have a tendency to pull out the reinforcements, and a "resistant" zone, where the shear stresses are directed inward and prevent the sliding of the reinforcements.
3. The reinforcement forces are sustained by a frictional bond between the soil and the reinforcing element; the reinforced zone is stable and resists the thrust from the unreinforced soil it supports, much like a gravity retaining structure.
4. The facing of the retained structure is relatively thin, with prefabricated elements used for MSE walls and, usually, shotcrete for soil nailed walls.

The main *differences* are:

1. *The construction procedure.* Although at the end of construction the two structures may look similar, the construction sequence is radically different. Soil nailed walls are constructed "top down" by staged excavations, while MSE walls are constructed "bottom up." Thus, the wall deformation pattern is different during construction. This also results in differences in the distribution of the forces that develop in the reinforcement, particularly during the construction period. In an MSE structure (built bottom up), the working forces that develop in the reinforcement layers generally increase from top to bottom. In a nailed structure (built top down), the working loads that develop in the reinforcement layers are generally of uniform magnitude, similar to those in a braced excavation.
2. *Nature of the soil.* Soil nailing is an in situ reinforcement technique exploiting *natural ground,* the properties of which cannot be preselected and controlled as they are for MSE fills. MSE walls usually utilize clean, low-water-content granular backfills, which have a known friction angle and little to no cohesion. On the contrary, nails are installed into soil and rock (natural ground) whose strength properties (friction angle and cohesion) and water content can vary through a wide range.
3. *Soil-reinforcement bond.* Grouting techniques are usually employed to bond the nail reinforcement to the surrounding ground, with the load transferred along the grout to the soil interface. In MSE structures, friction is generated directly along the reinforcement-soil interface.

www.EngineeringEBooksPdf.com

8.8.4 Wall Drainage Systems

Almost all shotcrete failures in slope stabilization applications have resulted from inadequate drainage. Therefore, drainage is a *critical* design and construction element. Drainage from behind the shotcrete face can be provided by the following methods:

1. *Surface interceptor ditch.* Excavate a shallow ditch along the crest of the excavation to lead away surface water. Drainage gutters or lined ditches are recommended immediately behind the top of the wall.
2. *Prefab geotextile drains.* Place 12-in-wide (300-mm) prefabricated geotextile drain strips (Miradrain 6000, Amerdrain 200, etc.) vertically prior to applying the shotcrete. Typical spacings are the same as the horizontal nail spacing. Extend the drain mats down the full height of the excavation and discharge into a collector pipe at the base.
3. *Weep holes and horizontal drains.* Install 2-in-diameter (50-mm) PVC pipe weep holes on approximately 10-ft (3-m) centers through the shotcrete face where heavier seepage is encountered. Plug the pipe temporarily when shotcrete is applied. Longer PVC horizontal drain pipes can also be installed in heavy seepage areas.

8.8.5 Wall Facing Systems

Temporary walls are typically left with a rough shotcrete face—"gun" finish—with weep holes and protruding nail heads. For permanent walls, where the rough finish is aesthetically unacceptable, the following face options are available:

1. *Separate fascia wall.* As an alternative to the exposed shotcrete finish, the shotcrete can be covered with a separate concrete fascia wall, either cast in place (CIP) or constructed of precast panels. The CIP section is typically a minimum of 6 to 8 in (150 to 200 mm) thick. Precast face panels can be smaller modular panels or full-height fascia panels such as those used to cover permanent slurry walls. A disadvantage of the smaller modular face panels is difficulty of attaching the face panels to the nail heads and some proprietary patent restrictions. A disadvantage of full-height precast panels is that, because of practical constructibility weight and handling limitations, their use is limited to wall heights less than 25 ft (8 m).

2. *Permanent exposed shotcrete facing.* Present technology for shotcrete placement is such that the final shotcrete layer can be controlled to close tolerances, and with nominal hand finishing, an appearance similar to a CIP wall can be obtained (if desired). The shotcrete, whether left in the natural gun finish or hand-textured, can also be colored either by adding coloring agent to the mix or by applying a pigmented sealer or stain over the shotcrete surface. *Only* experienced, well-qualified structural shotcrete specialty contractors should place and finish the permanent structural shotcrete. "Wet-mix" shotcrete should be specified instead of dry-mix because good quality control is easier with wet-mix. Also, wet-mix shotcrete can be air-entrained for improved freeze-thaw durability, whereas dry-mix cannot.

8.8.6 Design of Soil Nailed Retaining Structures

The stability of a soil nailed structure relies on (1) transfer of resisting tensile forces generated in the inclusions in the active zone into the ground in the resistant zone, through friction or adhesion mobilized at the soil-nail interface, and (2) passive resistance developed against the face of the nail. Ground nailing using closely spaced inclusions

www.EngineeringEBooksPdf.com

produces a composite coherent material. As shown in Fig. 8.54, the tensile forces generated in the nails are considerably greater than those transmitted to the facing.

The design procedure for a nailed retaining structure includes (1) estimation of nail forces and location of the potential sliding surface, (2) selection of the reinforcement type, cross-sectional area, length, inclination, and spacing, and (3) verification that stability is maintained during and after excavation with an adequate factor of safety. Methods for determining tensile, bending, and shear stresses in the nails are given by FHWA based on a limit equilibrium analysis.

The majority of soil nailed retaining structures constructed in France are based on two distinct technologies: (1) the method of Hurpin, with nails driven into the ground on close spacing, i.e., vertical and horizontal spacing equal to or less than 3 ft (1 m), and (2) widely spaced grouted nails. With the method of Hurpin, the nails (generally reinforcing bars) are relatively short and are driven into the ground by percussion or vibratory methods. The relatively high nail density permits thinner wall facings. In walls with widely spaced nails, the nails are generally longer. Typical data for soil nailed walls with a vertical facing and a horizontal earth pressure are shown in Table 8.11. The "nailing density" listed in Table 8.11 is a dimensionless parameter representing soil nails placed in a uniform pattern. It is defined as

$$\chi = \frac{T_r}{\gamma S_h S_v L} \tag{8.25}$$

where T_r = ultimate tensile force that can be mobilized at head of nail
S_h = horizontal spacing between nails
S_v = vertical spacing between nails
L = length of nails
γ = total unit weight of soil

This parameter represents the maximum tensile force in a nail as it relates to the weight of the soil reinforced with a chosen grid spacing.

A full set of preliminary design charts is included in the FHWA translation of *Recommendations Clouterre,* 1991. Diagrams for an angle of installation of the nails of $i = 20°$ are shown in Fig. 8.55 for illustration.

Figure 8.55 provides a preliminary chart for a soil nailed wall. It seeks to define in approximate terms the lengths, spacings, and resistance values of the nails to ensure

TABLE 8.11 Typical Characteristics of Soil Nailed Walls with Vertical Facing and Horizontal Earth Pressure

	Nails at close centers (method of Hurpin)	Widely spaced nails
Length of nails	0.5 to 0.7H	0.8 to 1.2H
Number of nails per m^2 of facing	1 to 2	0.15 to 0.4
Perimeter of nail	150 to 200 mm (6 to 8 in)	200 to 600 mm (8 to 24 in)
Tensile strength of reinforcing bar (nail)	120 to 200 kN (34 to 45 kips)	100 to 600 kN (22 to 135 kips)
Nailing density	0.4 to 1.5	0.13 to 0.6

Source: From *Recommendations Clouterre, French National Research,* 1991, (English translation by Federal Highway Administration, 1993), with permission.

www.EngineeringEBooksPdf.com

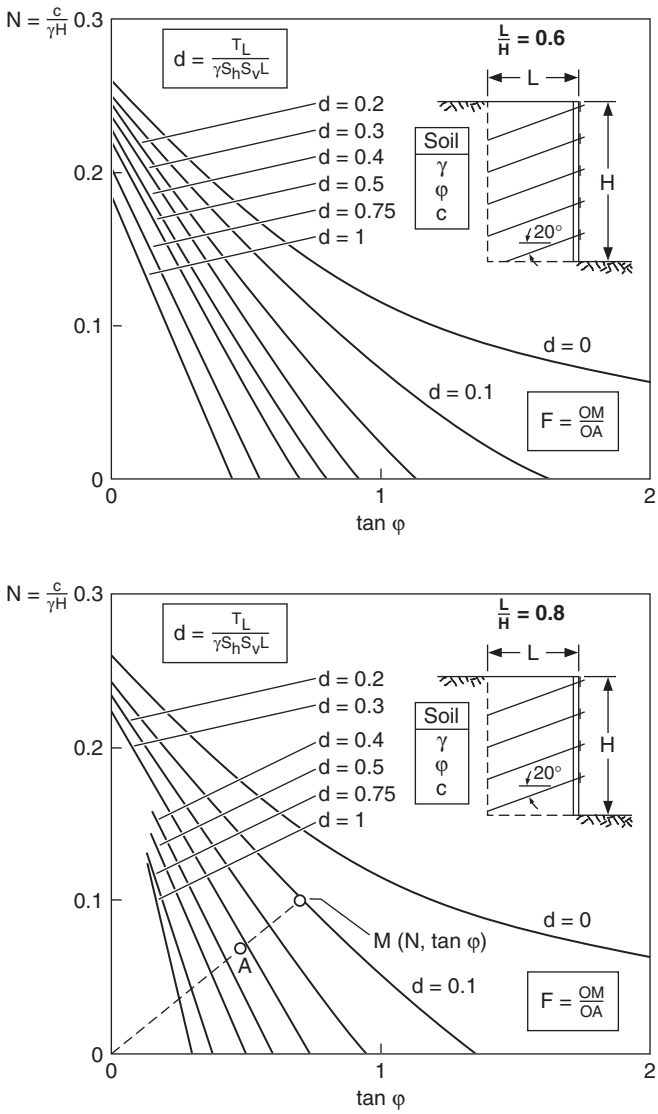

FIGURE 8.55 Preliminary design charts for soil nailed walls. (*From* Recommendations Clouterre, *French National Research, 1991, translation by Federal Highway Administration, 1993, with permission*)

internal and external stability. It may be used in an early evaluation stage based on macro assumptions such as homogeneous soil, identical and evenly spaced loads in the nails, and pure tension in the nails; the bending stiffness of the nails is neglected, regardless of the angle of incidence of the potential failure surface. This approach is based on the classic method of vertical slices with circular potential failure surfaces. The charts are based on a system of coordinates that characterize the shear resistance of the soil.

www.EngineeringEBooksPdf.com

Consider the following example: height $H = 10$ m, $\gamma = 20$ kN/m^3, $\phi = 35°$, $c = 20$ kPa. Assume $L/H = 0.8$. Calculate coordinates and plot as point M on the chart.

$$N = \frac{c}{\gamma H} = \frac{20}{20 \times 10} = 0.10 \qquad \tan\phi = \tan 35° = 0.70$$

Draw a line from the origin O to M. The safety factor F is the ratio OM/OA. Therefore, for a safety factor of $^3/_2$, locate point A two-thirds of the distance along the line OM. Interpolation gives the required nailing density d as 0.33. Thus:

$$\frac{T_L}{\gamma S_h S_v L} = 0.33$$

$$\frac{T_L}{S_h S_v L} = 0.33 \times 20 \times 0.8 \times 10 = 52.8 \text{ kPa}$$

Thus, for a nail tensile force T_L, the spacings S_h and S_v can be determined. The result from the chart should be generally conservative and used only for preliminary evaluation.

The final design for stability of a soil nailed wall is analyzed either by calculating the deformations or by using limit equilibrium design. The first method uses finite element calculation and has not been refined to the point where there is an "acceptable" procedure. In Europe to date, there has been considerable diversity in some details among the various design approaches, both within and across national boundaries. A most significant factor is the postulated mechanism by which nails are considered to reinforce a soil mass. For nails installed nearly parallel to the direction of maximum soil tensile strain (e.g., near-horizontal nails and a near-vertical excavation face), the prevailing opinion is that the reinforcing action is predominantly related to tensile loading within the nails. Under service load conditions, the contribution of shear or bending is considered negligible. As failure conditions are approached, the contribution of shear or bending action is more significant but still small. From a practical point of view, however, it is recognized that the soil nails should exhibit ductile behavior in response to bending in order to minimize the potential for sudden failures related to brittleness. Where reinforcing elements are used as dowels and are oriented nearly perpendicular to the direction of maximum shear strain, the shearing, bending, and tensile action of the reinforcement should be considered.

All design methods are based on concepts of limiting equilibrium or ultimate limit states. Various types of potential slip surface are considered, including circular, log spiral, and bilinear wedge. In general, each of the methods appears to provide a satisfactory representation for design purposes. Consistent with the above, most design computer codes consider only the tensile action of the nails, but some also permit consideration of the shear or bending action of the nails. Almost all of the design methods do not explicitly consider the potential for pullout of the reinforcing nails within the active block between the facing and the slip surface. It is implicitly assumed that the nail-soil adhesion within this zone, together with the structural capacity of the facing, will be sufficient to prevent this type of failure. Some design approaches offer strict guidelines for the required structural wall capacity to prevent such active-zone failures, but others appear to rely on experience and do not directly address this issue.

On the basis of the overall reinforcing requirements determined from the limiting equilibrium design calculations, the reinforcing steel is empirically proportioned. In general, designers use nails of uniform length and cross-sectional area, on a uniform spacing. For drilled and grouted nails, the nail spacing is typically in the 3- to 6-ft (1- to 2-m) range. For driven nails, much higher densities (typically 1.5 to 2 nails per

www.EngineeringEBooksPdf.com

square meter) are used. The nail lengths are typically in the range of 60 to 80 percent of the height of the wall, but may be shorter in very competent rocklike materials and longer for heavy surface surcharge or high seismic or other operational loading.

As noted above, facing design requirements are empirically determined using a variety of techniques. German practice requires the use of a uniform facing pressure equivalent to 75 to 85 percent of the active Coulomb loading. The Clouterre recommendations require designing the facing and connectors to support between 60 and 100 percent of the maximum nail loading (for both ultimate and serviceability limit states), depending on the nail spacing.

8.8.7 Construction Considerations for Soil Nailed Walls

The construction sequence is typically to excavate, nail, and shotcrete the face in increments from the top down. Figure 8.56 shows a schematic of a sequence for underpass widening. Where face stability is a concern, a flashcoat of shotcrete may be applied before nail installation. The most common method of nail installation in

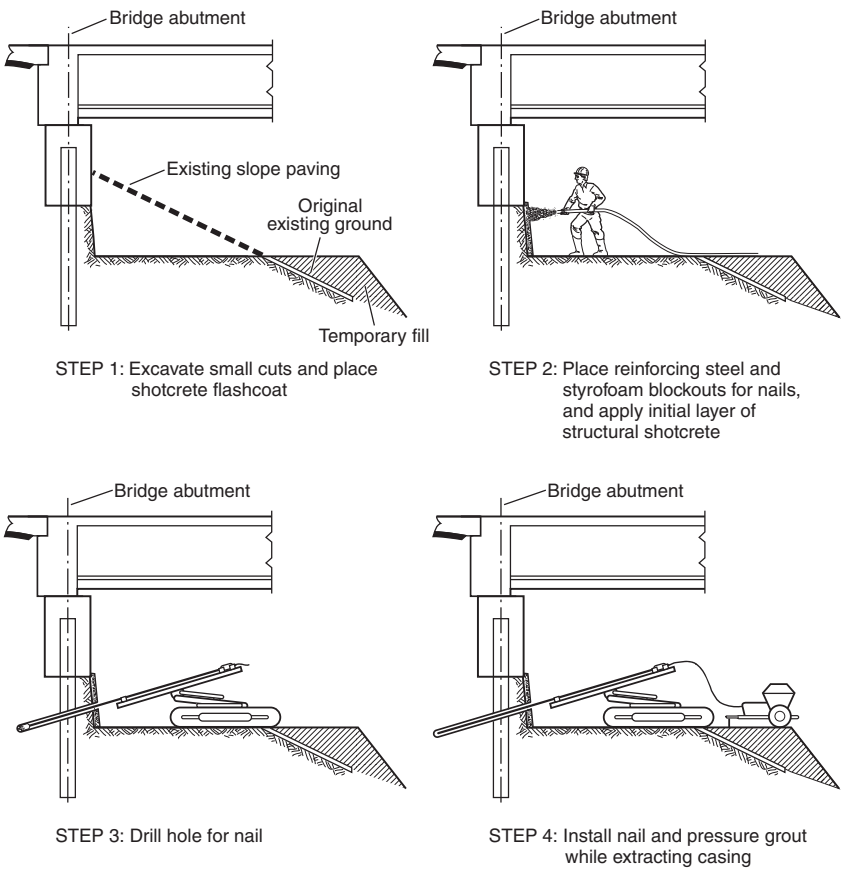

FIGURE 8.56 Construction sequence for soil nailed wall used in widening of underpass. (*From Oregon Department of Transportation, with permission*)

www.EngineeringEBooksPdf.com

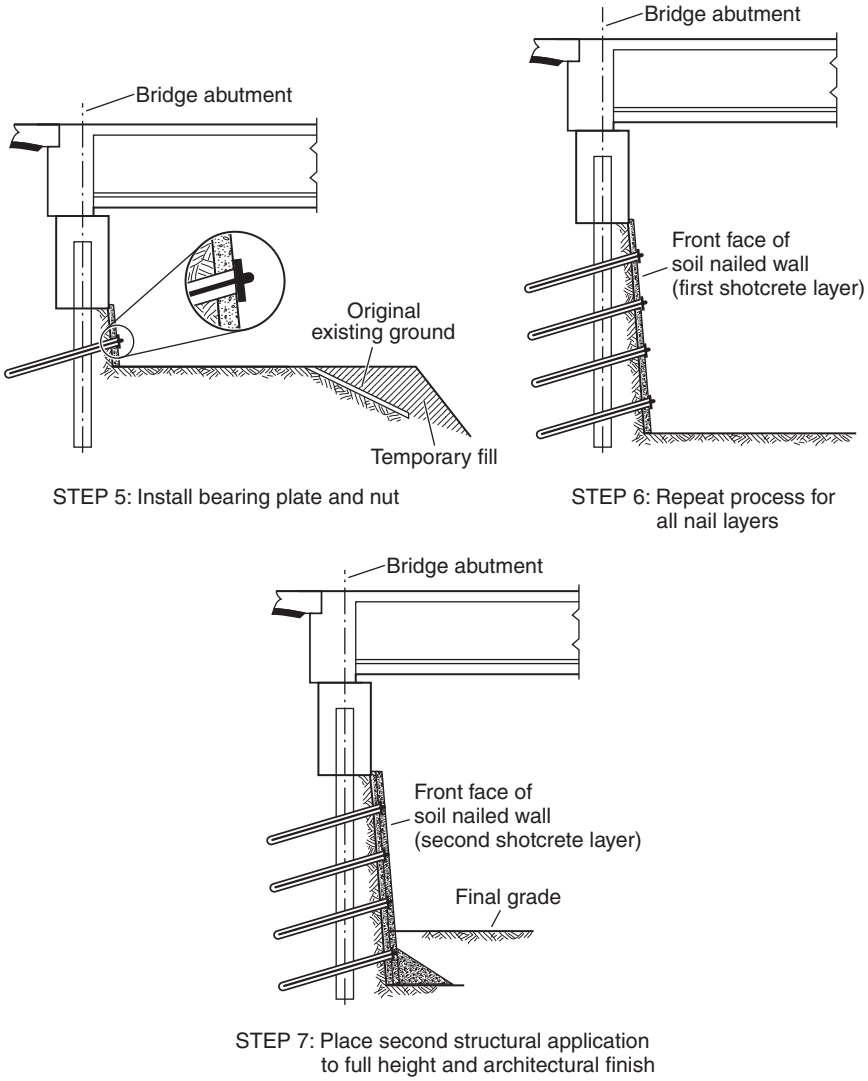

FIGURE 8.56 (*Continued*)

Europe, as in the United States, is the drill-and-grout method. Most commonly, the steel tendon is installed prior to grouting, although this sequence is sometimes reversed. In France, however, very significant use is also made of driven nails without grouting. Other specialty techniques for installing nails include jet grout nailing (France), driven nails with an oversize head and subsequent grouting of the annulus (Germany), and compressed-air explosive injection of nails (United Kingdom).

Small hydraulic, track-mounted drill rigs of the rotary-percussive type are most commonly used to install nails. These rigs can work in relatively confined surroundings and are therefore compatible with many of the constraints associated with crowded urban

www.EngineeringEBooksPdf.com

environments. Open-hole drilling methods are predominant, with cased-hole methods used in particularly difficult ground conditions. The most common grouting method used with open-hole drilling is the low-pressure tremie method. Where extensive use of casing is required, alternative methods of construction are often more cost-competitive.

Steel tendons typically used for drill-and-grout soil nails usually consist of ¾- to 2-in-diameter (20- to 50-mm) bars with a yield strength in the range of 60 to 70 kips/in^2 (420 to 500 N/mm^2). These steels exhibit ductile behavior under bending action. The driven nails used commonly in France are typically steel angle sections, which show better ability to deal with subsurface obstructions such as cobbles and small boulders than do circular steel sections.

Drainage is a critical aspect of soil nail wall construction. Face drainage is virtually always used with permanent walls, and very commonly used with temporary walls. Face drainage usually consists of synthetic drainage elements placed between the shotcrete and the retained soil, and may be typically 8- to 12-in-wide (200- to 300-mm) synthetic strips or perforated pipes. Depending on the site groundwater conditions, face drainage may be supplemented with weep holes through the facing and longer horizontal perforated drain pipes. Control of surface water is also an important element of the drainage system.

Temporary soil nail wall facings generally consist of shotcrete 3 to 4 in (80 to 100 mm) thick and a single layer of wire mesh. Permanent shotcrete walls 6 to 10 in (150 to 250 mm) thick are very common in Germany, and these walls typically include a second layer of wire mesh. For architectural reasons, permanent walls of precast panels and cast-in-place concrete are also commonly used in France and Germany.

Testing and monitoring during construction are an important aspect of soil nail wall construction in Europe. Nail bond testing is almost universally performed, to confirm the assumptions made during design or to enable redesign in the event that the design assumptions cannot be realized. For relatively homogeneous sites, typically 3 to 5 percent of the nails will be tested, depending on the size of the job. Testing is also undertaken whenever changed geologic or construction conditions occur. Wall performance monitoring usually consists of measuring horizontal wall movements during construction. Some contractors make more use of inclinometers for displacement monitoring. Maximum horizontal displacements are typically in the range of 0.1 to 0.3 percent of the height of the wall, depending on ground conditions. Strain gauging of nails, together with the use of load cells at the nail head, is usually reserved for experimental walls.

The level of quality assurance and control monitoring varies significantly. In Germany, for example, the QA-QC inspector might be on the job from 10 percent to full time.

Overall, soil nail wall performance in Europe has been very good. Problems during construction have typically been associated with encountering loose fill, granular soil with no apparent cohesion, water, and constructed obstructions such as utility trenches. Other problems have been associated with a contractor's failing to construct the wall in accordance with the plans and specifications (e.g., eliminating nails, overexcavation of lifts). Frost action on fully bonded nails has also resulted in development of very large loads near the head of the nail, where no insulating protection has been provided in the wall design.

8.8.8 Soil Nailed Wall Facing Design Procedure

The following typical details and design procedure are based primarily on Caltrans' method for use on highway construction, but the method is very similar to other methods presently in practice. Design facing pressures are based on the French Clouterre empirical method. The cast-in-place portion of the facing is designed for this pressure for permanent

www.EngineeringEBooksPdf.com

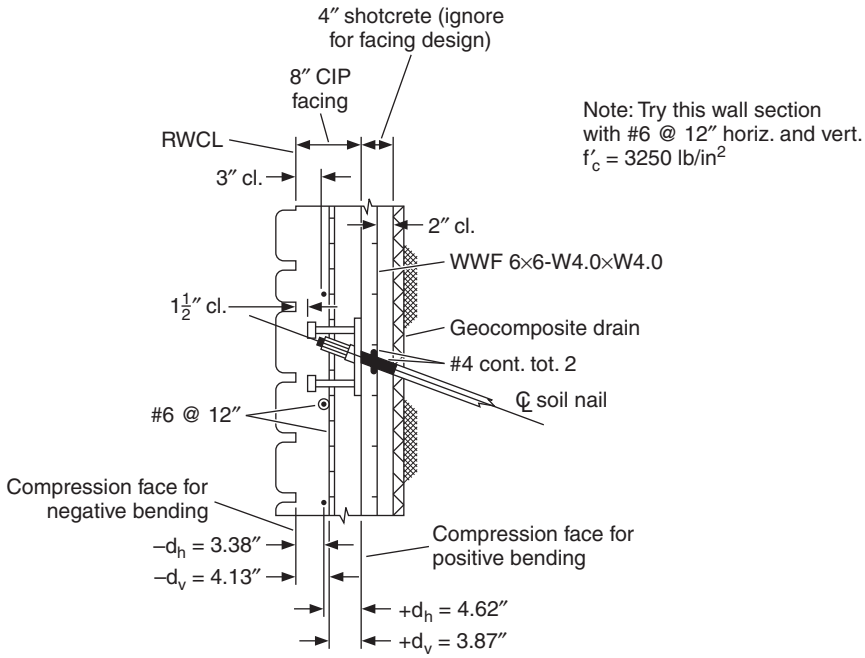

Negative steel

$-d_h = 3 + \frac{0.75}{2} = 3.38''$ ← Controls

$-d_h = 3 + 1.5 \times 0.75 = 4.13''$

Positive steel

$+d_h = 8 - 3.38 = 4.62''$

$+d = 8 - 4.13 = 3.87''$

Note: d_h and d_v are effective horizontal distances to the horizontal and vertical steel, respectively.

FIGURE 8.57 Section through facing of soil nailed wall showing concrete reinforcement and soil nail connection. (*From J. W. Keeley,* Soil Nail Wall Facing: Sample Design Calculations, *Federal Highway Administration, 1993, with permission*)

walls only. The strength of the shotcrete construction facing is ignored. Only the ultimate limit state is addressed; no serviceability calculations are made for cracking or deflections. Sample design calculations are illustrated following the presentation of the procedure.

Typical Details. (See Figs. 8.57 to 8.59.)

1. Use a shotcrete layer with a 4-in (100-mm) minimum thickness.
2. Include a single layer of welded wire fabric at mid-thickness. Common options are:

   6 × 6-W4.0 × W4.0 (4 gauge wire; diameter, 0.225 in; cross-section area = 0.080 in²/ft or 0.17 mm²/mm)

   4 × 4-W2.9 × W2.9 (6 gauge wire; diameter, 0.192 in; cross-section area = 0.087 in²/ft or 0.18 mm²/mm)
3. Use two continuous horizontal no. 4 grade 60 reinforcing steel bars at each nail.

www.EngineeringEBooksPdf.com

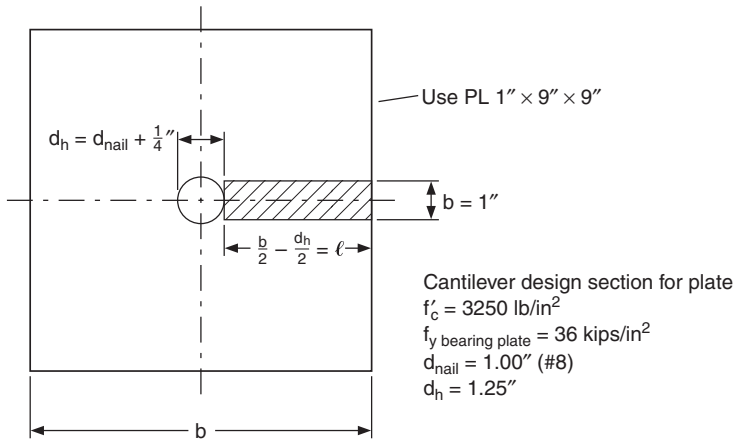

FIGURE 8.58 Bearing plate for soil nailed wall showing cantilever strip for calculations. (*From J. W. Keeley,* Soil Nail Wall Facing: Sample Design Calculations, *Federal Highway Administration, 1993, with permission*)

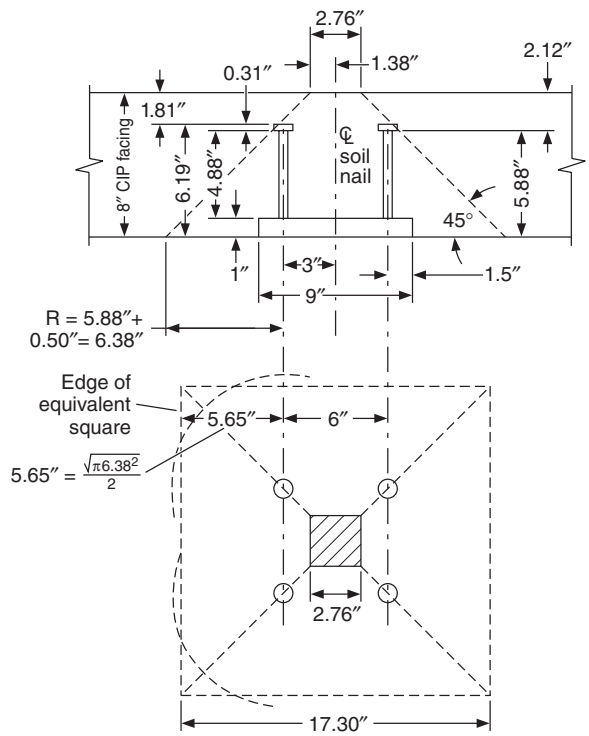

Effective stress area = $A_{cp} = 17.30^2 - 2.76^2 = 291.7$ in^2

FIGURE 8.59 Bearing plate for soil nailed wall showing effective stress area for embedment design capacity. (*From J. W. Keeley,* Soil Nail Wall Facing: Sample Design Calculations, *Federal Highway Administration, 1993, with permission*)

www.EngineeringEBooksPdf.com

4. Use 1-ft-wide (300-mm) vertical geocomposite drain between nails; connect the geocomposite drain to a 2-in-round (600-mm) plastic weep hole outlet drain just above finished grade near the bottom of the wall.
5. Place the ASTM A36 steel nail bearing plate, 1 in × 9 in × 9 in (25 × 225 × 225 mm) with wedge washer and nut on the outside face of the shotcrete; set into place before the shotcrete hardens. Add studs to this plate to engage permanent facings that are placed over this initial shotcrete layer.

Step 1: 4-in (100-mm) Shotcrete Construction Facing. This is the only facing required for temporary walls (service life less than 18 months) and the first portion required for permanent walls. It is placed immediately after each stage of excavation and nail placement. Current AASHTO and American Concrete Institute (ACI) codes do not address the loadings or the structural capacities for this facing. Therefore, many current designs rely on details that have shown good performance on previous projects rather than design calculations.

Step 2: 8-in (200-mm) CIP Permanent Facing—Compute Design Nail Load and Pressure at Facing. The design nail load at the facing is computed for the given nail size, steel grade, and nail spacing according to the French Clouterre empirical method. The French determined through field tests that the nail load at the facing (T_0) did not exceed about one-half the maximum nail load (T_{max}) near the soil failure surface. They established a design nail load for the facing that varies from 0.6 times T_{max} for closely spaced nails to 1.0 times T_{max} for larger nail spacings. T_{max} is the ultimate limit state established for the nail tension (Caltrans procedure) at $0.75 \times f_y$ ($T_{max} = A_{nail} \times 0.75 \times f_y$), where f_y is the yield strength of the nail. The design pressure for the facing is then simply the design nail load at the facing (T_0) divided by the nail tributary facing area (i.e., horizontal nail spacing times vertical nail spacing).

Step 3: 8-in CIP Permanent Facing—Design for Flexure. The cast-in-place facing is designed so that its ultimate strength is greater than the moments in the facing computed by simple continuous beam equations for the facing pressure from T_0. Only one layer of grade 60 reinforcing steel placed near the middle of the section is used. (See Fig. 8.57.) The controlling d is used for the ultimate strength computation.

Step 4: 8-in CIP Permanent Facing—Nail Connection Design. The connection of the nail to the cast-in-place facing is designed to carry the nail's ultimate limit state in tension, T_{max}. The nail bearing plate is sized to limit the bearing pressure from T_{max} to the ultimate value allowed by AASHTO ($0.6f'_c$). The plate thickness is determined to provide sufficient bending strength for the moment from the bearing pressure about the nail nut. Studs are welded to the bearing plate to carry T_{max} entirely by the 8-in (200-mm) CIP permanent facing. The ultimate punching shear capacity of the steel embedment is computed according to American Concrete Institute specifications.

Sample Design Calculations for Soil Nail Wall Facing (Based on Caltrans Methods)

Step 1: 4-in Shotcrete Construction Facing. Details as previously described may be used.

Step 2: 8-in CIP Permanent Facing—Concrete Design Nail Load and Pressure at Facing. Given No. 8 nails; $f_y = 60$ kips/in^2; $A_{nail} = 0.79$ in^2; horizontal nail spacing $S_h = 6$ ft; and vertical nail spacing $S_v = 6$ ft.

Begin by calculating the design nail loads.

$$T_{max} = \text{design nail load at soil failure surface at ultimate limit state}$$
$$= 0.75 f_y A_{nail} = 0.75 \times 60 \times 0.79 = 35.6 \text{ kips}$$

www.EngineeringEBooksPdf.com

T_0 = design nail load at facing at ultimate limit state

$$\frac{T_0}{T_{max}} = 0.5 + \frac{0.3S_{max} - 0.5}{5} \quad \text{for} \quad S_{max} \text{ in ft}$$

(*Note:* This is the French Clouterre equation.)

$$T_0 = T_{max}\left(0.5 + \frac{0.3S_{max} - 0.5}{5}\right)$$

$$= 35.6\left(0.5 + \frac{0.3 \times 6 - 0.5}{5}\right) = 27.0 \text{ kips}$$

The design nail load T_0 is then used to calculate the facing design pressure.

W_u = facing design pressure at ultimate limit state

$$= \frac{T_0}{S_h S_v} = \frac{27.0}{6 \times 6} = 0.75 \text{ kip/ft}^2$$

Step 3: 8-in CIP Permanent Facing—Design for Flexure. *Note:* Try this wall section with No. 6 reinforcing bars spaced at 12 in horizontally and vertically; f'_c = 3250 lb/in^2.

Required ultimate moment per foot (*horizontal and vertical; positive and negative*)

$$M_u = W_u \frac{l^2}{10} = 0.75\left(\frac{6^2}{10}\right) = 2.7 \text{ ft} \cdot \text{kips/ft}$$

Ultimate design capacity for trial section

8-in CIP permanent facing

b = 12 in per ft of design width
f'_c = 3250 lb/in^2
f_y = 60 kips/in^2
d = 3.38 in (see Fig. 8.57)
A_s = 0.44 in^2 (No. 6 @12 in) = area of steel

$$a = \frac{A_s}{0.85} \frac{f_y}{f'_c b} = \frac{0.44 \times 60}{0.85 \times 3.25 \times 12} = 0.80 \text{ in}$$

= depth of concrete compression

www.EngineeringEBooksPdf.com

A strength reduction factor of $\phi = 0.90$ is applied to the nominal moment strength M_n as follows:

$$\phi M_n = \phi A_s f_y \left(d - \frac{a}{2}\right)$$

$$= 0.9 \times 0.44 \times 60 \times \left(3.38 - \frac{0.80}{2}\right) \times \frac{1}{12} = 5.9 \text{ ft} \cdot \text{kips/ft} \geq 2.7 \qquad \text{OK}$$

Check of minimum steel requirements. According to AASHTO, the tension reinforcement must be equal to or greater than the lesser of that required to develop a moment (1) 1.2 times the cracking moment (based on the gross section modulus S_g) and (2) 1.33 times that required by analysis for the specified loading conditions. This leads to the following equations for the cross-section area of the reinforcement:

$$A_s = \frac{1.2 \times S_g \times 7.5\sqrt{f'_c}}{\phi f_y \times 0.9d}$$

$$A_s = \frac{1.33\, M_u}{\phi f_y \times 0.9d}$$

The strength reduction factor ϕ is 0.90. Substitution gives the following results:

$$A_s = \frac{1.2(12 \times 8^2/6)7.5\sqrt{3250}}{0.9 \times 60{,}000 \times 0.9 \times 3.38} = 0.40 \text{ in}^2/\text{ft}$$

and

$$A_s = \frac{1.33(2.7 \times 12{,}000)}{0.9 \times 60{,}000 \times 0.9 \times 3.38} = 0.26 \text{ in}^2/\text{ft}$$

Thus, A_s must be at least 0.26 in^2/ft to meet these requirements. For temperature and shrinkage, minimum A_s is 0.13 in^2/ft (No. 4 @18 in). The final selection is No. 6 reinforcing bars spaced at 12 in, which provides A_s of 0.44 in^2/ft, a nominal level of reinforcing. For complete designs, also check cantilever sections at the top and bottom of the wall and any other special facing sections, such as at expansion or contraction joints.

Step 4: 8-in CIP Permanent Facing—Nail Connection Design

Design bearing plate at ultimate limit state for T_{max}

$$T_{\max} = 0.75 f_y A_{\text{nail}} = 0.75 \times 60 \times 0.79 = 35.6 \text{ kips}$$

Calculate the ultimate concrete bearing strength under the plate using a strength reduction factor of $\phi = 0.70$. Therefore,

$$\text{Ultimate concrete bearing strength} = 0.85\phi f'_c$$

$$= 0.60 f'_{c\,\min}$$

$$\text{“A” bearing} = b^2 - \frac{\pi d_h^{\,2}}{4}$$

www.EngineeringEBooksPdf.com

$$\text{Required "A" bearing} = \frac{35.6}{0.6 \times 3.25} = 18.26 \text{ in}^2$$

$$\text{Available "A" bearing} = 9^2 - \frac{\pi 1.25^2}{4} = 79.8 \text{ in}^2 \qquad \text{OK}$$

$$\text{Bearing stress under plate} = \frac{35.6}{79.8} = 0.45 \text{ kip/in}^2$$

$$\text{Allowable stress} = 0.6 \times 3.25 = 1.95 \qquad \text{OK}$$

$$l = \frac{1}{2}(b - d_h) = \frac{1}{2}(9 - 1.25) = 3.875 \text{ in}$$

$$t \text{ required} = l\sqrt{\frac{3.33w}{f_y}} = 3.875\sqrt{\frac{3.33 \times 0.45}{36}} = 0.79 \text{ in}$$

$$t \text{ available} = 1 \text{ in} \qquad \text{OK}$$

Note:

$$\frac{wl^2/2}{t^2/6} = 0.9f_y$$

Therefore,

$$t = l\sqrt{\frac{3.33w}{f_y}}$$

where w = ultimate bearing pressure.

Required steel area for studs to resist T_{max}. The design strength of the stud f_{ds} is determined as the lesser of (1) the stud yield strength (f_y = 50 kips/in^2) multiplied by a strength reduction factor of $\phi = 0.90$ and (2) 80 percent of the stud tensile strength (f_u = 60 kips/in^2). Therefore,

$$f_{ds} = \min\,[\phi f_y;\, 0.8f_u]$$
$$\phi f_y = 0.9 \times 50 = 45 \text{ kips/in}^2$$
$$0.8f_u = 0.8 \times 60 = 48 \text{ kips/in}^2$$

Therefore

$$f_{ds} = 45 \text{ kips/in}^2$$

$$\text{Required stud area } A_s = \frac{T_{\max}}{f_{ds}}$$

$$= \frac{35.6}{45} = 0.79 \text{ in}^2$$

www.EngineeringEBooksPdf.com

Try 4½-in ϕ studs.

$$A_s = 4 \times 0.196 = 0.79 \text{ in}^2 \qquad \text{OK}$$

Check of anchor head bearing for ½-in ϕ stud. $d_s = 0.5$ in. Determine head area A_h.

$$A_h = \pi\left(\frac{d_h}{2}\right)^2 = 0.79 \text{ in}^2 \text{ (manufacturer's data, } d_h = 1)$$

$$\frac{A_h}{A_s} = \frac{0.79}{0.196} = 4 > 2.5 \qquad \text{OK}$$

$$T_h = 0.312 \text{ in} > 0.25 \text{ in}$$

Head thickness is OK.

Ultimate connection embedment design capacity P_d

$$P_d = 4\phi\sqrt{f'_c}A_{cp}$$

$$f'_c = 3250 \text{ lb/in}^2$$

$$\phi = 0.65 = \text{strength reduction factor in this case}$$

$$A_{cp} = 291.7 \text{ in}^2 = \text{effective stress area (see Fig. 8.59)}$$

$$P_d = 4 \times 0.65 \times \sqrt{3250} \times 291.7 \times \frac{1}{1000} = 43.2 \text{ kips}$$

$$P_d > T_{\max} = 35.6 \text{ kips} \qquad \text{OK}$$

8.8.9 Global Stability

Evaluation of a global safety factor that includes the nailed soil and the surrounding ground requires determination of the critical sliding surface. This surface may be located totally inside, totally outside, or part inside and part outside the nailed zone. Limit equilibrium methods are usually used, and the Davis method is recommended because of its simplicity and availability in the public domain (C. K. Shen et al., "Field Measurements of an Earth Support System," *Journal of the Geotechnical Division, American Society of Civil Engineers,* vol. 107, no. 12, 1981). The Davis method has been modified (V. Elias and I. Juran, "Soil Nailing," Report for FHWA, DTFH 61-85-C, 1988) to permit input of interface limit lateral shear forces obtained from pullout tests, separate geometric and strength data for each nail, facing inclination, and a ground slope at the top of the wall. The concrete facing elements (shotcrete, cast-in-place concrete, or prefabricated panels) are considered for design to be analogous to a beam or raft of a unit width equal to the nail spacing supported by the nails.

8.8.10 Contracting Practices

Although procurement and contracting practices vary among the European countries, there are some common elements that tend to distinguish European practices from those in the United States. These include (1) strong industry, academic, and government

www.EngineeringEBooksPdf.com

cooperation in research and development and the introduction of new technologies; (2) a partnering approach among all parties involved in a particular project; (3) less litigation; and (4) a high level of contractor involvement in the conceptualization and design phases, as well as during construction.

In France, the contractor design-build approach appears to be dominant. For public agency work, a prequalified group of contractors are typically asked to prepare a final design and bid, based on a preliminary design prepared by the owner or the owner's consultant. Alternative designs may also be prepared by the contractor at this time, and may be selected if they are technically and financially viable and meet the overall performance and scheduling requirements of the project. French contractors tend to be much larger and stronger than their U.S. counterparts, and the major groups tend to support significant research and development efforts. Contractor-consultant-academic-government cooperation in areas requiring major research and development is particularly well developed in France.

In Germany, public agency work is again usually bid on a conceptual or preliminary design prepared by or for the agency, with the contractor required to submit a bid on the original design and also encouraged to submit any alternative design that will provide an equivalent wall at a reduced price. Ultimately, award is made for the lowest-cost responsive bid. Soil nailing in Germany requires the involvement of one of a small group of prequalified or "licensed" contractor organizations. As in France, these contractors tend to be technically and financially very strong. Private work, like public work, tends to be awarded on the basis of low bid.

Based on the European, and particularly the French, experience, two main recommendations are offered for encouraging the development of innovative construction methods and improving the construction performance for such methods. First, stronger and more formal government-academic-industry cooperation should be established to develop new technologies and disseminate the information in a nonproprietary manner. This should also include participating in corresponding European programs when the opportunity arises and when the information will be of mutual benefit. Second, alternative bidding, including contractor design-build alternatives, performance-oriented specifications, and the use of carefully prequalified specialty contractors, should be encouraged.

8.9 PREFABRICATED MODULAR WALLS

There are also a number of prefabricated modular wall systems in use. Such systems are generally composed of modules or bins filled with soil, and function much like gravity retaining walls. The bins may be of concrete or steel, and can be used in most cases where conventional gravity, cantilever, or other wall systems are considered. AASHTO indicates that such walls should not be used on curves less than 800 ft in radius, unless a series of chords can be substituted; or where the calculated longitudinal differential settlement along the face of the wall is excessive. Also, durability considerations must be addressed, particularly where acidic water or deicing spray is anticipated.

8.10 MSE BRIDGE ABUTMENT WALLS

The abutment wall is an earth-retaining wall supporting traffic surcharge load and heavy loads from the bridge superstructure. The geosynthetic-reinforced soil (GRS) earth-retaining wall is a subset of the MSE wall. The technology of GRS systems has

www.EngineeringEBooksPdf.com

been used extensively in transportation systems including earth-retaining walls, roadway pavement subgrades, and foundation improvement for heavy traffic loads such as bridge abutments. The increasing use and acceptance of geosynthetic soil reinforcement has been triggered by a number of factors, including cost savings, aesthetics, simple and fast construction techniques, and excellent performance. A comparatively new application of this technology is the use of GRS in bridge abutments and roadway approaches. When compared to conventional bridge substructures involving the use of deep foundations to support bridge abutments, the use of geosynthetic-reinforced soil systems has the potential for alleviating the "bump at the bridge" problem caused by differential settlements between the bridge abutment and the approaching roadway. It is especially effective where the GRS can be extended beyond the typical rectangular reinforcing zone of the wall and truncated gradually into a trapezoidal reinforcing zone toward the approach roadway. The FHWA published preliminary design details for bridge superstructures directly supported by MSE walls with panel facings and steel reinforcements in 1997 (Elias and Christopher, 1997), and it was included in the AASHTO 1998 *Standard Specifications for Highway Bridges*. A recently published FHWA report (FHWA, 2000) describes three studies on GRS bridge-supporting structures: a load test of the Turner-Fairbank pier in McLean, Virginia, in 1996; a load test of the Havana Yard piers and abutment in Denver, Colorado, in 1996–1997; and a study of a production bridge abutment constructed in Black Hawk, Colorado, in 1997. These studies have demonstrated excellent performances with negligible creep deformations of GRS bridge-supporting structures constructed with closely spaced reinforcements and well-compacted granular backfill. The maximum surcharge pressure was 4.2 kip/ft^2 (200 kPa). This FHWA report concluded that the GRS abutments are clearly viable and adequate alternatives to bridge abutments supported by deep foundations or by metallic reinforced soil abutments. A complete literature overview of studies on GRS structures supporting high-surcharge loads has been presented (Abu-Hejleh et al., 2000).

The most prominent GRS abutment for bridge support in the United States is the new Founders/Meadows Parkway structure, located 20 mi south of Denver, Colorado, which carries Colorado State Highway 86 over U.S. Interstate 25 (Fig. 8.60). This is the first major bridge in the United States built on spread footings supported by a concrete block facing geosynthetic-reinforced soil system, eliminating the use of traditional deep foundations (piles and caissons) altogether. Figure 8.61 shows the bridge superstructure supported by the "front GRS wall," which extends around a 90° curved corner in a "lower GRS wall" that supports a "concrete wing wall" and a second-tier "upper GRS wall." Figure 8.62 shows a plan view of the completed two-span bridge and approaching roadway structures. Each span of the new bridge is 113 ft (34.5 m) long and 113 ft (34.5 m) wide, with 20 side-by-side, precast, prestressed, concrete box girders. There are three monitored cross-sections (sections 200, 400, and 800) along the faces of the "front GRS wall" and "abutment wall." Figure 8.63 depicts a typical monitored cross-section with various wall components and drainage features in the backfill. To keep the water out of the GRS, several drainage systems were used in the trapezoidal extended reinforcing zone, including an impervious membrane and collecting drain at the top and a drainage blanket and pipe drain near the toe of the embankment cut slope. Figure 8.63 also illustrates how the bridge superstructure loads (from bridge deck to girders) are transmitted through the girder seat to a shallow strip footing placed directly on the top of a geogrid-reinforced concrete block facing earth retaining wall. The centerline of the abutment bearing and edge of the footer are located 10 ft (3.1 m) and 4.4 ft (1.35 m), respectively, from the facing of the front GRS wall. This short reinforced-concrete abutment wall supports the bridge superstructure, including two winged walls cantilevered from the abutment. This wall, with a continuous neoprene sliding and bearing interface at the bottom, rests on the center of the spread footing.

www.EngineeringEBooksPdf.com

FIGURE 8.60 View of Founders/Meadows Bridge near Denver, Colorado. (*From* Research Report, *Colorado Department of Transportation, Denver, Colo., with permission*)

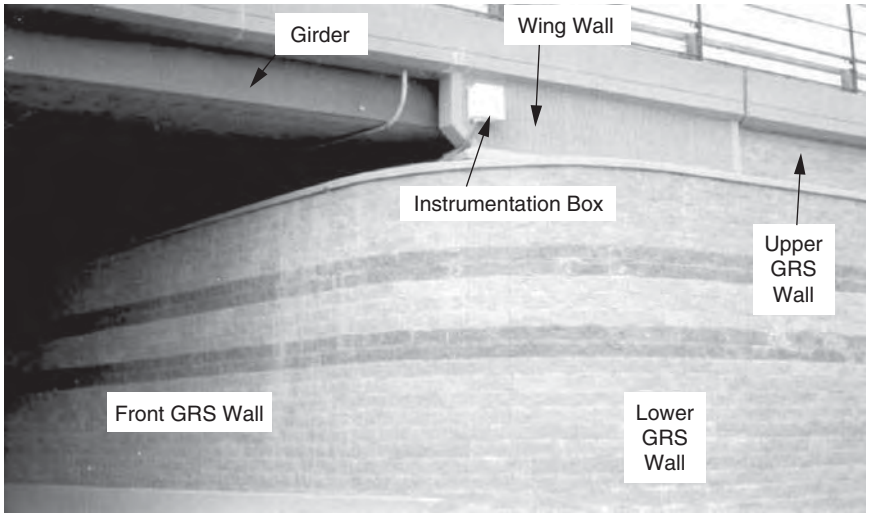

FIGURE 8.61 View of southeast side of the Founders/Meadows bridge abutment. (*From* Research Report, *Colorado Department of Transportation, Denver, Colo., with permission*)

www.EngineeringEBooksPdf.com

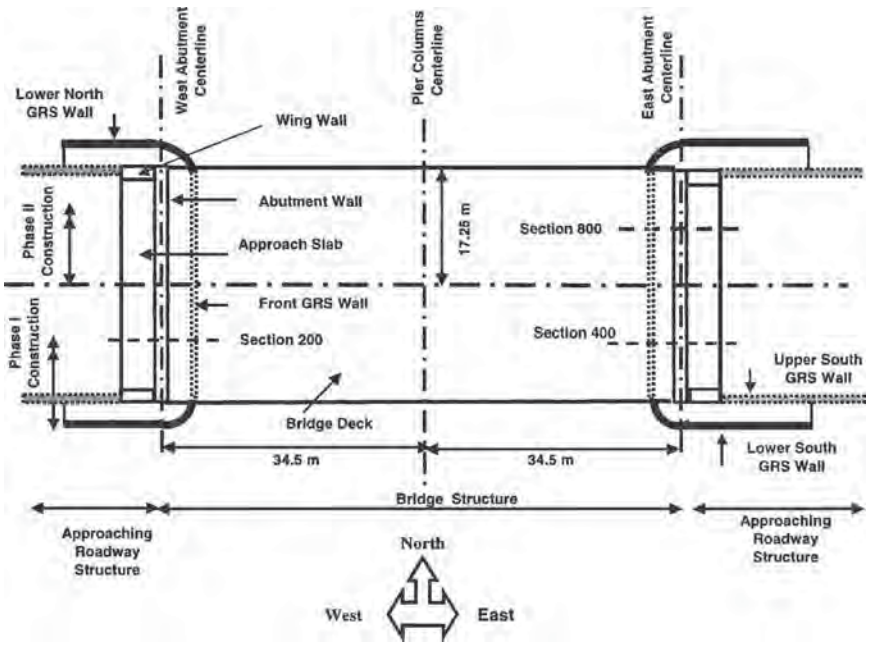

FIGURE 8.62 Plan view of the Founders/Meadows structure showing the locations of monitored sections (200, 400, and 800) and construction phases (I and II). (*From* Research Report, *Colorado Department of Transportation, Denver, Colo., with permission*)

It confines the reinforced backfill soil behind the bridge abutment (see Figs. 8.61 and 8.63) and also partially supports the bridge approach slab. The old bridge was maintained in service during construction of the new bridge. A phased construction of the almost 9-m-high (29-ft), two-tier, U-shaped abutments began in July 1998, and the bridge was completed in just 12 months. This included a temporary bracing at the south side of the replaced bridge and a temporary GRS wall at the north of phase 1 of the partial new bridge. The Colorado Department of Transportation (CDOT) designed the Founders/Meadows structure in 1996, 1 year before the FHWA report of Elias and Christopher (1997) was published. It was expected that water could be kept out of the claystone bedrock formation below the base of the reinforced backfill, and that the use of an extended reinforced transition zone (Fig. 8.63) would lead to adequate overall stability for the structure and minimize settlements of the GRS wall system.

Several of the common causes for development of bridge bumps were avoided or eliminated completely in the design of the Founders/Meadows structure. The main cause of uneven settlements in typical systems is the use of different foundation types. While the approaching roadway structure is constructed on compacted backfill, deep foundations such as steel H piles typically are adopted to transfer the heavy bridge abutment loads to bedrock or competent bearing strata. At the Founders/Meadows structure, in order to minimize uneven settlements between the bridge and the approaching roadway, the approach embankment and the bridge abutment wall backfills were further integrated into an extended reinforced soil zone (Fig. 8.63). A second cause of differential settlements is erosion of the fill material behind and around the abutment wall induced by the surface water runoff collected from the bridge deck.

www.EngineeringEBooksPdf.com

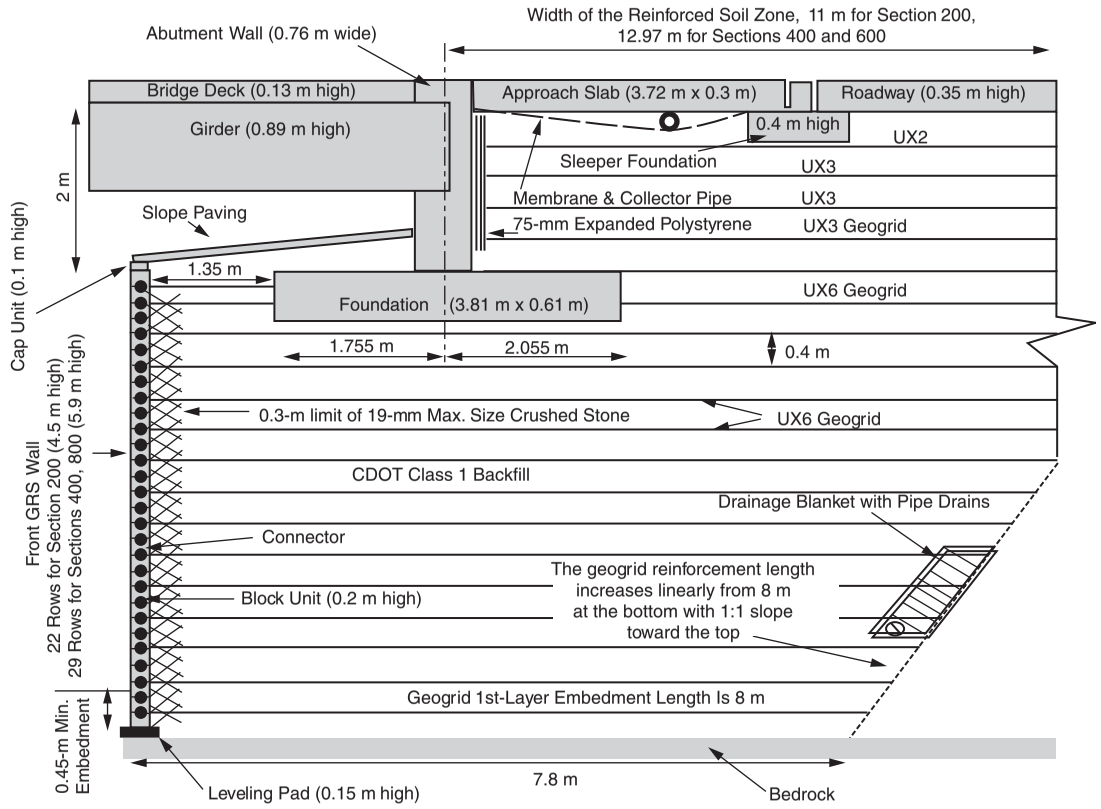

FIGURE 8.63 Typical monitored cross-section through front and abutment GRS walls showing layout and materials. (*From* Research Report, *Colorado Department of Transportation, Denver, Colo., with permission*)

www.EngineeringEBooksPdf.com

Several measures were implemented to prevent the peculation of surface water, as well as intercepted groundwater, from reaching the reinforced soil mass and the bedrock at the base of the fill (e.g., placement of impervious membranes with collector pipes as shown in Fig. 8.63). Finally, a third potential cause of differential settlements is seasonal temperature changes, which may induce expansion and contraction of the bridge superstructure with the abutment back wall pushed against the reinforced fills. A 3-in-thick (75-mm) low-density, compressible expanded polystyrene sheet spacer was installed between the reinforced backfill and the abutment back walls (see Fig. 8.63). It was expected that this system would isolate the thermally induced cyclic movements of the bridge superstructure without affecting the retained reinforced backfill.

The performance of bridge structures supported by GRS abutments had not been tested under actual service conditions to merit acceptance without reservation in highway construction. Consequently, the Founders/Meadows structure was considered experimental and comprehensive material testing, instrumentation, and monitoring programs were incorporated into the construction operations. Three sections of the GRS system were instrumented to provide information on the structure movements, soil stresses, geogrid strains, and moisture content during construction and even after opening the structure to traffic. The results gathered from the instrumentation program verified the suitability of CDOT and AASHTO design procedures and assumptions regarding the use of GRS walls to support bridge abutments and as a measure to alleviate the bridge bump problem. Several CDOT research reports present a summary, analysis, and assessment of all the movement results of the Founders/Meadows structure, collected at various construction stages and while the structure was in service for approximately 35 months after opening to traffic. These results include displacements of the front wall facing, settlement of the bridge footing, and differential settlements between the bridge and approaching roadway structures. These reports also provide recommendations for future design and construction of GRS abutments directly supporting bridge and approaching roadway structures. The unique features of the Founders/Meadows Bridge, and other perceived advantages of GRS walls commonly used in Colorado, as well as the excellent performance of full-scale GRS abutments and piers in monitoring programs, convinced CDOT engineers of the feasibility of GRS earth-retaining walls and abutments.

8.11 REFERENCE MATERIAL

The following reference sources were helpful in developing this chapter:

Abu-Hejleh, N., Outcalt, S., Wang, T., and Zornberg, J., "Performance of Geosynthetic-Reinforced Walls Supporting the Founders/Meadows Bridge and Approaching Roadway Structures, Report 1: Design, Materials, Construction, Instrumentation, and Preliminary Results," Report No. CDOT-DTD-R-2000-5, Colorado Department of Transportation, 2000.

Allen, T., and Bathurst R., "Application of The K_0-Stiffness Method to Reinforced Soil Wall Limit States Sesign," Report No. WA-RD 528.1, Washington State Department of Transportation, 2001.

Bridge Design Manual, Colorado Department of Transportation, Section 5, "Earth Retaining Wall Design Requirements."

Claybourn, A. F., *Comparison of Design Methods for Geosynthetic-Reinforced Soil Walls,* Woodward-Clyde Federal Services.

Clough, G. W. and Duncan, J. M., "Earth Pressures," Chapter 6 in *Foundation Engineering Handbook*, Fang, H. Y., Van Nostrand Reinhold, New York, 1991.

Design Manual, Part 4, "Structures," Section 5, "Retaining Walls," Commonwealth of Pennsylvania, Department of Transportation.

www.EngineeringEBooksPdf.com

"Durability/Corrosion of Soil Reinforced Structures," Federal Highway Administration Report RD-89-186, December 1990.

Elias, V., and B. R. Christopher, "Mechanically Stabilized Earth Walls and Reinforced Soil Slope, Design and Construction Guidelines," FHWA Demo Project 82-1, Washington, D.C., 1997.

Elias, V., and I. Juran, "Soil Nailing," report for Federal Highway Administration, DTFH 61-85-c, 1988.

FHWA, "GRS Bridge Pier and Abutments," FHWA-RD-00-038 (sponsored by Turner-Fairbanks Highway Research Center), Washington, D.C., 2000.

Geosystems for Highways and Transportation Structures: Guide to Selection, Design and Construction, Colorado Department of Transportation, June 1992.

Harned, C. H., *Some Practical Aspects of Foundation Studies for Highway Bridges,* Bureau of Public Roads, January 1959.

Keeley, J. W., *Soil Nail Wall Facing: Sample Design Calculations,* Federal Highway Administration, 1993.

LRFD Bridge Design Specifications, 2007, American Association of State Highway Officials.

Mitchell, J. K., and B. R. Christopher, "North American Practice in Reinforced Soil Systems," *Proceedings, Specialty Conference on Design and Performance of Earth Retaining Structures,* Geotechnical Division, American Society of Civil Engineers, 1990.

Recommendations Clouterre, 1991, French National Research, Project Clouterre (English translation, 1993, U.S. Department of Transportation, Federal Highway Administration).

Shen, C. K., et al., "Field Measurements of an Earth Support System," *Journal of the Geotechnical Division, American Society of Civil Engineers,* vol. 107, no. 12, 1981.

Standard Specifications for Highway Bridges, 2002, American Association of State Highway and Transportation Officials, Section 5, "Retaining Walls."

www.EngineeringEBooksPdf.com

www.EngineeringEBooksPdf.com

CHAPTER 9
NOISE BARRIERS

James J. Hill, P.E.
Structural Engineer
Consultant
Anoka, Minnesota

Roger L. Brockenbrough, P.E.
President
R. L. Brockenbrough & Associates, Inc.
Pittsburgh, Pennsylvania

During recent years, there has been increasing concern over noise generated by highway traffic in urban areas. Noise abatement programs have been implemented by many agencies. Source control methods have included the development of quieter pavements, quieter tire tread patterns, and speed restrictions. In some regions, noise levels have been reduced by depressing roadways or building tunnels, or by special designs of adjacent buildings. In many cases, however, noise reduction has been achieved through controlling the noise path by the design and construction of noise barriers. Sometimes referred to as sound barriers or noise walls, these longitudinal walls are built specifically to reduce traffic noise. In addition to their primary purpose, noise barriers are sometimes adopted to shield unsightly areas from the public and restore a feeling of visual privacy. A noise barrier project involves many areas including acoustical evaluations, consideration of aesthetics, cost evaluations, roadway safety design, structural design, foundation design, and construction.

This chapter includes information from the following sources: S. H. Godfrey and B. Storey, *Highway Noise Barriers: 1994 Survey of Practice,* Transportation Research Board, Washington, D.C., 1995; D. Byers, "Noise Wall Aesthetics: New Jersey Case Study," presentation, Transportation Research Board, Washington, D.C., 1995; *Guide on Evaluation and Abatement of Traffic Noise,* American Association of State Highway and Transportation Officials (AASHTO), Washington, D.C., 1993; *Guide Specifications for Structural Design of Sound Barriers,* AASHTO, Washington, D.C., 1989, and *Interim Revisions*, 1992 and 2002; and *Road Design Manual,* Minnesota Department of Transportation, 2008.

www.EngineeringEBooksPdf.com

9.1 ACOUSTICAL CONCEPTS

Figure 9.1 illustrates the fundamental function of a noise barrier. The noise source is traffic, particularly large truck traffic, which generates noise by the action of tires on pavement, the drive train, the engine, and the exhaust. The receiver or receptor can be defined as the location where land use results in exposure to highway traffic noise for an hour or more per day. It may typically be set at 5 ft (1.5 m) above ground or at window level. Acoustical design includes controlling noise that passes over the wall and is diffracted to the receiver, noise that is transmitted through the wall, and noise that is reflected from the wall.

Noise levels are expressed in dBA, decibels measured with a frequency weighting network corresponding to the A scale on a standard sound-level meter. The ease of attaining increasing levels of attenuation has been estimated as follows:

5 dBA: simple

10 dBA: attainable

15 dBA: very difficult

20 dBA: nearly impossible

Designs for reductions greater than 15 dBA are usually not considered feasible because of unpredictable and uncontrollable atmospheric and terrain surface effects, scattering from trees and buildings, and other unknowns.

Diffracted Noise. The noise that passes over the barrier, which is the most important of the three types of noise, depends on the location and height of the barrier. Attenuation is directly related to the difference between the length of the path from the source to the receiver in the absence of a noise barrier, and the length of the path from the source over the top of the wall to the receiver by diffraction. At a given distance from the roadway, increasing the barrier height increases the attenuation achieved. However, this relationship is obviously nonlinear, and as the height of the barrier increases above some reasonable value, the attenuation that can be achieved decreases rapidly. Assuming a barrier height that just breaks the line of sight from the source to the receiver, and assuming that such a barrier provides a 5-dBA attenuation, a rule of thumb is to assume that an attenuation of ½ dBA can be achieved with each additional foot of barrier height. But because the relationship is actually nonlinear, this approximation holds for only a limited range. Sometimes it is possible to take advantage of local terrain and locate a noise barrier on a

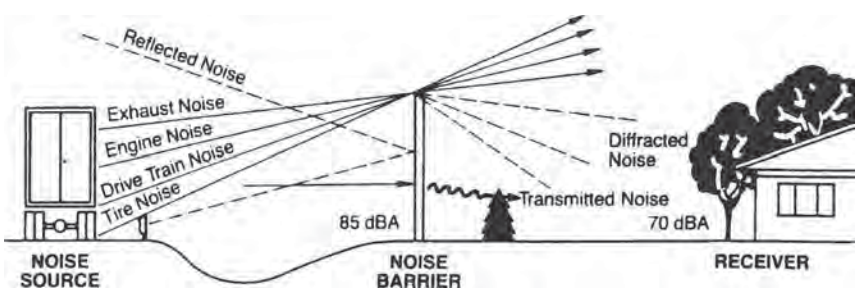

FIGURE 9.1 Acoustical concept of noise wall. (*From* Handbook of Steel Drainage and Highway Construction Products, *American Iron and Steel Institute, Washington, D.C., 1994, with permission*)

www.EngineeringEBooksPdf.com

stretch of land at a higher elevation. This reduces the required height and cost. Barrier heights are generally in the range of 6 to 25 ft (2 to 7.5 m). They are generally effective in reducing noise for receptors within approximately 200 ft (60 m) of a highway.

Traffic generates sound waves longitudinally as well as laterally. Thus, care must be taken to extend the length of the barrier sufficiently to achieve the desired end result. A rule of thumb states that the noise barrier should extend, in each direction from the boundaries of the receiver, 4 times the distance from the receiver to the noise wall. This length can be reduced by combining the ends of the barrier with other features, such as natural knolls, or by flaring the wall toward the land use area to form a barrier to the longitudinal sound waves.

Transmitted Noise. The noise that passes through the barrier depends on its surface characteristics and composition (density). Acoustical performance can be determined by testing in accordance with standards of the American Society for Testing and Materials (Test Designation E90). It is important that the wall not contain gaps or holes. Overlapping sections can be used to accommodate access through the wall for maintenance or other personnel when applicable. In such cases, the overlap should be at least 2.5 to 3 times the width of the opening.

Reflected Noise. There is a possibility that noise barrier effectiveness can be reduced by reflected noise, such as where longitudinal walls are located on either side of the roadway. To avoid this situation, it has been recommended that the width between two parallel barriers be at least 10 times the average height of the barrier above the roadway.

9.2 ACOUSTICAL STANDARDS AND DESIGN

Federal Highway Administration (FHWA) regulations for mitigation of highway traffic noise in the planning and design of federally aided highways are contained in Title 23 of the United States Code of Federal Regulations, Part 772. Requirements during the planning and design of a highway project include identification of traffic noise impacts, examination of potential mitigation measures, inclusion of reasonable and feasible noise mitigation measures, and coordination with local officials. The regulations contain noise abatement criteria for different types of land uses and human activities. Reasonable and feasible efforts must be made to provide noise mitigation when the criteria are exceeded. Compliance with the regulations is a prerequisite for securing federal-aid highway funds for construction or reconstruction of highways. Further details may be found in the FHWA *Noise Standards*.

Computer programs based on mathematical models have proven very useful for predicting noise levels and designing noise barriers. The FHWA has released an entirely new, state-of-the-art computer program known as TNM® that provides a traffic noise model for predicting noise impacts in the vicinity of highways. Replacing older models (Stamina and Optima), the new program uses advances in personal computers and software to improve the accuracy and ease of modeling highway noise, and the design of effective, cost-efficient highway noise barriers. Included are the following components:

- Modeling of five standard vehicle types, including automobiles, medium trucks, heavy trucks, buses, and motorcycles, as well as user-defined vehicles
- Modeling of both constant-flow and interrupted-flow traffic using a 1994/1995 field-measured database
- Modeling of the effects of different pavement types, as well as the effects of graded roadways

www.EngineeringEBooksPdf.com

- Sound level computations based on one-third octave-band database and algorithms
- Graphically interactive noise barrier design and optimization
- Attenuation over/through rows of buildings and dense vegetation
- Multiple diffraction analysis
- Parallel barrier analysis
- Contour analysis, including sound level contours, barrier insertion loss contours, and sound-level difference contours

Local criteria may be more restrictive than federal criteria. In Minnesota, for example, daytime criteria in residential areas are an hourly L_{10} of 65 dBA and an hourly L_{50} of 60 dBA. L_{10} refers to the sound level that is exceeded 10 percent of the time over the period under consideration (1 h, in this case); L_{50} refers to the level exceeded 50 percent of the time. Noise abatement projects strive for a minimum reduction of 10 dBA in L_{10} and 6 dBA in L_{50} from existing traffic noise levels.

9.3 TYPES OF NOISE BARRIERS

Except for berms and brick or masonry construction, most noise barriers are of post-and-panel construction, that is, vertical posts spaced a distance apart with horizontal or vertical panels running in between. Rails or girts may also run between the posts to support the panels. Posts are embedded in the foundation soil to design depth, which depends on wind loading, soil properties, and frost depth. Brick and masonry walls generally require spread footings, underlain with uniform layers of soil.

According to a 2006 FHWA survey, the main materials that have been used for noise wall construction, in order of usage, are the following:

- Concrete
- Block and brick
- Wood
- Metal
- Earth berms

Other materials sometimes used include plastic, glass, composites, and gabions (rock-filled wire baskets). Glass and clear plastic are alternatives where it is desirable to not block scenic views.

Concrete. Users indicate that selection has been based on cost, durability, low maintenance, surface treatments available, and acoustical properties. Concrete walls can be precast, cast in place, or of post-and-panel construction. Precast concrete panels may be of either prestressed or reinforced construction. Various surface finishes such as texturing are available and are relatively inexpensive. A 4-in-thick (100 mm) wall provides a relatively high transmission reduction of 32 dBA.

Block and Brick. Brick and masonry construction is also popular, mainly because of its pleasing appearance and acoustical properties. However, initial cost is likely to be higher, depending upon the geographic location, as well as repair cost if damaged. Slump block, cinder block, stone, and brick have all been used. Units can be arranged to produce various patterns. The typical transmission loss is 33 dBA, and this can be improved by the addition of mineral wool or fiberglass to the wall interior.

www.EngineeringEBooksPdf.com

Wood. Attributes that favor selection include favorable cost, ease of construction, aesthetic appeal, and availability. Disadvantages include shrinkage, warpage, deterioration, difficulty of quality control, discoloration around fasteners, and low resistance to vandalism. Wooden walls have been constructed from timbers, planks, plywood, and laminated products. Often, these materials are used for the panels or facing and concrete or steel is used for the posts. Tongue-and-groove construction should be used for panels running between posts to eliminate gaps. The durability of wooden walls can be enhanced by using materials that have received a pressure preservative treatment. Wood provides a transmission loss of 18 to 23 dBA/in (0.72 to 0.92 dBA/mm) of thickness.

Metal. Metal walls, primarily of cold-formed steel sheet, can be used as stand-alone barriers or in combination with berms. Low cost, maintainability, and ease of construction favor use of steel. Disadvantages include vibration problems, denting, and ineffectiveness in the low-frequency range. For steel construction, the panels are fluted (have rectangular corrugations) vertically or horizontally, with a channel-shaped cap at the top. Prepainted galvanized sheet and weathering steel have been used, and other durability treatments are available. The transmission reduction is generally between 10 and 22 dBA.

Earth Berms. Earth berms or mounds are preferred by some. Natural appearance, favorable cost, ready availability of the material, low maintenance cost, and acoustical efficiency favor their selection. A disadvantage is the space needed for construction, particularly in view of safety requirements. Sometimes soil is used in combination with a wall where space is limited. For example, if there is not enough space to achieve the full desired height with a berm, a noise barrier can be located on top of a berm of lower height. Berm side slopes of 4:1 or flatter are desirable on the basis of considerations of safety (see Art. 6.2), roadside maintenance, and wall stability. Some states permit up to 3:1, depending on lateral location. Both acoustics and aesthetics can be improved when the berm is combined with a dense planting of vegetation. Vegetation with a minimum depth of 100 ft (30 m) (perpendicular to roadway), height of 15 ft (4.5 m), and density such that there is no clear path between the highway and the adjacent land use areas can result in a noise level reduction of up to 5 or 6 dBA. Existing soils must be capable of supporting the added berm load.

Proprietary Systems. There are a number of proprietary systems on the market. Some products have included recycled materials such as tire rubber, wood processing waste, and plastics. Of course, steel and aluminum products contain a very high level of recycled metal.

9.4 NOISE BARRIER SELECTION

Presuming acoustical requirements are met, selection is usually based on cost and aesthetics. Costs that must be considered include site preparation, the barrier material itself, foundations, fabrication, erection, and maintenance. Aesthetics should be judged with the involvement of personnel with diverse backgrounds, and public participation should be encouraged. However, there are numerous factors that go into the final selection. Some factors that should be considered in wall selection are summarized in Table 9.1.

The reasonableness of constructing a noise barrier can be judged from a cost-benefit analysis. For example, Minnesota uses the following procedure. The benefit is based on the summed insertion loss (noise reduction) for each residence in the first two rows

www.EngineeringEBooksPdf.com

TABLE 9.1 Factors to be Considered in Noise Wall Selection

Site
Site geometry
Right-of-way width
Relation to source height
Configuration, single or parallel
Noise source
Traffic type and volume
Noise frequencies
Extraneous noise sources
Material
Structural integrity
Durability and maintenance
Susceptibility to vandalism
Acoustical properties
Cost
Site preparation
Wall material
Foundations
Fabrication
Erection
Maintenance
Aesthetics
Scale relationship
Environmental relationship
Line form
Color
Texture
Community preferences

of homes nearest the noise wall where the insertion loss is greater than 5 dBA. The ratio of this sum in dBA to the cost of the barrier in thousands of dollars must be greater than 0.4 for the benefit to be considered reasonable.

9.5 AESTHETICS

Often, a detailed study is required to address the question of aesthetics. Alternative systems can be compared, with sketches, renderings, plan drawings, and other visual aids prepared to assist in the process. A multidiscipline team approach is desirable, including design engineers, planners, landscape architects, and environmental personnel. Public input to the selection system helps achieve acceptance of the final system. Designers should be concerned with the visual impact from both the driver's side and the land user's side of the wall.

Some of the important aspects of aesthetics include scale relationship, relationship to environmental setting, line form, color, and texture. A high barrier alongside a row of single-story houses is not desirable, nor is one placed so close to the residences that unwanted shadows are created. A rule of thumb is to locate the barrier at a distance of

www.EngineeringEBooksPdf.com

atleast 4 times its height from the residences. Barriers higher than 16 ft (5 m) should be critically evaluated for potential unsightly impact.

Evergreens and other plantings are often used with noise barriers to enhance appearance. Vines, encouraged to grow up the posts and across the top, have been appreciated by the public. Most agree that walls with extensive landscaping are the most visually appealing.

When the elevation changes along the length of the wall, it is generally considered more pleasing to step the wall rather than to taper it. Ordinarily, the wall will be constructed vertically. There has been some use of walls that have the top tilted away from the roadway in an effort to reduce echo, but such walls tend to give the appearance of instability when viewed from the back side.

On concrete panel walls, etc., it is necessary to place steel brackets or similar devices at the top of the joints between panels to hold the panels in alignment. A slight horizontal difference of 1 or 2 in (25 or 50 mm) between the tops of adjacent panels may give the illusion that some panels are in distress. This illusion is greatly enhanced by sun shadow lines that, under certain conditions, cast increasing shadows as one looks along the panels. For walls already in place, maintenance forces can tilt panels back in place with a backhoe or similar equipment and add the brackets.

If a barrier is located in an area with dominant architectural features, this should be considered in the selection of barrier material, texture, and color. On the other hand, if located near dominant roadside features such as bridges, there should be an effort to create a strong visual relationship to such features.

In most cases, there should be some consistency in color and surface treatment. For example, some agencies use color scheme and architectural treatment to distinguish between particular corridors.

In general, barriers with darker colors are preferred to lighter ones because they tend to blend better with the background. Although it is usually desirable to avoid visual dominance, murals painted on noise barriers have been well received in some urban regions. The murals tend to discourage graffiti, and in some cases, youth groups have been active in restoring murals defaced by graffiti.

With concrete barriers, a textured appearance can give the effect of shadows and is often considered desirable. Deep textures are more effective than shallow ones. Such treatments can be achieved by a raking technique on the surface of the newly placed concrete. Colors can be obtained with additions to the mix, or by applying a pigmented sealer after the barrier is constructed. The latter technique helps take care of small color variations between panels and minor field problems. Also, coatings can aid in removing graffiti and restoring the intended surface.

For a pleasing visual effect, as well as for safety and acoustic considerations, barriers should not begin or end abruptly. To achieve this, they may be stepped down, flared, or tied into an earth berm, a hillside, a bridge abutment, or another feature. Tapering or stepping is particularly desirable where the height of the barrier exceeds 6 ft (1.8 mm).

Views of several noise walls are shown in Figs. 9.2 through 9.5 to illustrate some of the effects that can be achieved. Figure 9.2 shows concrete-block construction and deep texturing with vertical grooves. The wall is stepped rather than tapered in height. Figure 9.3 shows timber tongue-in-groove construction, with a natural finish and a stepped height. In Fig. 9.4, the alignment of the timber barrier has been changed to a buttress configuration, and extensive plantings have been added. A much different effect has been obtained with concrete post construction, in Fig. 9.5, where the light posts make a distinct contrast with the darker timber.

Making use of variant sun shadow lines on tops of concrete posts yields a changing view of the posts and wall as the sun direction changes during the day. Morning and afternoon shadow lines are greater and thus tend to make aesthetically pleasing wall tops. Also, early morning and late evening sun glare is reduced by north-south noise walls.

www.EngineeringEBooksPdf.com

FIGURE 9.2 Concrete-block noise barrier with vertical groove treatment, stepped in height.

FIGURE 9.3 Timber noise barrier with tongue-in-groove construction, stepped in height.

www.EngineeringEBooksPdf.com

FIGURE 9.4 Timber noise barrier with buttress-type alignment.

FIGURE 9.5 Timber noise barrier with concrete posts showing effect of contrasting hues.

www.EngineeringEBooksPdf.com

9.6 SAFETY CONSIDERATIONS

Care must be taken not to install a noise barrier in such a way that it will be a safety hazard. The general considerations presented in Chap. 6, Safety Systems, apply here. Noise barrier design should incorporate all of the safety design techniques used in the basic roadway design. Examples of features that should be considered include transverse location to provide required clear zone, slopes of berms, sight distances, wall ends, plantings, and transitions.

Ideally, noise barriers should be located beyond the clear zone. If not, a traffic barrier may be warranted. It is usually best to design the traffic barrier as part of the noise barrier. If a wall is located at or near the edge of the shoulder, the portion of the wall above the traffic barrier should be capable of withstanding the force of an occasional vehicle that may ride up above the top of the barrier. Concrete or masonry construction would often be used in this case. However, laminated wood construction may also be used.

At locations such as ramps, intersections, and merge areas, care must be taken to avoid blocking the line of sight between vehicles. The AASHTO *Guide on Evaluation and Abatement of Traffic Noise* gives the following suggestions for placement of noise barriers:

> For on and off ramps, the minimum set back of a noise barrier is based upon the stopping sight distance, which is a function of the design speed and radius of curvature of the ramp. For ramp intersections, proper barrier location is set by the sight distance corresponding to the time required for a stopped vehicle to execute a left-turn maneuver (approximately 7.5 s). For intersecting roadways, barrier placement is determined from stopping sight distance, which depends on driver reaction time and deceleration rate.

The AASHTO *Guide Specifications for Structural Design of Sound Barriers* indicate that, when locating a sound barrier near a gore area, the wall should begin or end at least 200 ft (60 m) from the theoretical curb nose location.

Protrusions that could constitute a hazard must be avoided near traffic lanes, as well as facings that could become missiles in the event of a crash. Also, surfaces must not create excessive glare.

Sometimes it is necessary to store plowed snow between the roadway and the barriers over a width of 6 to 10 ft (1.8 to 3.0 m). In such cases, it should be removed as soon as practical to avoid blowing on the roadway and freezing. Also, there has been some occasional damage to wall panels from the pressure created by snowplows, and this should be avoided as well. Aside from snow storage, highway engineers should consider the potential for roadway icing problems resulting from deep shadows cast by walls.

The end of a noise barrier or earth berm can be a hazard to approaching traffic. When exposed to approaching traffic within the clear zone area, it should be treated with protection similar to that for other fixed objects. Barrier rails or crash cushions may be appropriate. End slopes for earth berms should be 6:1 or flatter, with 10:1 or 15:1 desirable.

9.7 MAINTENANCE CONSIDERATIONS

It is wise to keep a stock of compatible replacement materials on hand to repair damage from impact or vandalism. Consideration should be given to keeping replacement

www.EngineeringEBooksPdf.com

materials where they can weather to match installed barriers, such as for pressure-treated timber components. Also, if color is added to concrete panels during manufacture, it is desirable to make future replacement panels in the same operation.

The control of graffiti remains a problem in some urban areas. There are some anti-graffiti surface treatments available, but they are generally costly. Power washing and repainting are current options.

Plantings should be tolerant of roadside environments and require little or no maintenance. Access must be provided to both sides of the barrier for mowing, general maintenance, etc. Sometimes this may require backside access from city streets, or overlap openings along the length of the barrier. In some cases, arrangements can be made with abutting property owners to maintain the area behind the barrier. If the noise barrier is over 5 ft (1.5 m) high, the right-of-way fence can usually be eliminated.

Some block masonry noise walls and retaining wall combinations made of 2000- to 3000-lb/in^2 (14- to 21-MPa) dry cast units have exhibited extensive disintegration after 3 to 5 years. This disintegration is caused by salt spray from winter driving traffic during removal of snow and ice from the roadways. Testing of blocks removed from barriers showed similar disintegration and chloride ion content on the front and back or fill side. Application of treatments to seal only the front or exposed surfaces will not be effective for the back surfaces. Sealing the surfaces must be repeated and becomes a costly maintenance item. Work is underway to evaluate high-strength (5000-lb/in^2) (35 MPa) dry cast blocks that should reduce susceptibility to chloride contaminants.

9.8 PROJECT DEVELOPMENT STEPS

Table 9.2 outlines the major steps required in the development of final construction plans for a noise abatement project on an existing highway. Considerations in several of these steps are as follows.

TABLE 9.2 Project Development Steps for Noise Barriers for Existing Highways

1. Preliminary engineering
   a. Identify project limits
   b. Collect data
   c. Identify alternatives
2. Public and municipal involvement
   a. Discuss alternatives
   b. Decide on system
3. Preparation of preliminary plans
4. Preliminary approvals
   a. Municipal
   b. State DOT
   c. FHWA
5. Final design
6. Final approval and processing
7. Contract letting

www.EngineeringEBooksPdf.com

Preliminary Engineering. During the preliminary engineering step, the following actions should take place:

- Develop a basic noise abatement plan, and determine barrier height and location.
- Develop alternative methods of abatement such as walls, earth berms, berm-wall combinations, etc.
- Develop alternative locations for abatement facilities.
- Develop alternative material types such as concrete, timber, masonry, or steel.
- Develop a conceptual landscaping plan for each alternative.
- Develop cost estimates for alternatives.
- Develop a general environmental plan.
- Make preliminary arrangements for public informational meetings.

Items to be considered in selecting proposed alternatives include aesthetics, traffic safety, sight distance, drainage, maintenance, existing utilities, lighting, signing, potential soil problems, compatibility with surrounding terrain and land use, and restrictions imposed by available right-of-way. Consider any requirements for snow storage, future construction of sidewalks, trails, etc.

Layouts, cross-sections, and wall profiles should be prepared for each alternative. Aerial photography contour maps should provide sufficient accuracy for determining ground elevations. Supplementary field information may be required in problem areas. Drainage away from both sides of the noise barrier should be provided, with a minimum slope of 0.04. Ditches or culverts may be required where walls or berms alter natural drainage patterns.

Public and Municipal Involvement. Local officials and the affected public should be informed of the scope of the proposed work and the alternative methods being considered to achieve noise abatement. Work through these groups to achieve a consensus. Provide sketches, renderings, plan drawings, and other visual aids to assist in the process. With this input, a public corridor plan should be developed with a consistent theme that considers aesthetics and avoids conflicts with adjacent barriers.

Preparation of Preliminary Plans. Preliminary plans must be prepared for design and safety review. The plans should include a layout with the wall placement and profiles of the ground line and the top of the barrier. Supplemental layouts for sight distance requirements may be required.

Preliminary Approvals. Local approval of the preliminary plan developed is sought at this time. Where applicable, municipal acceptance of maintenance responsibility of back slopes or other areas outside the noise barrier should be obtained. Subsequent approval by the state DOT and FHWA is then sought.

Final Design. Information on soil conditions at the final noise barrier location should be obtained from the soils engineer. The required depth of the investigation should correspond to the depth of post embedment or depth of spread footings. For construction in new embankment areas, care must be taken to avoid excessive differential settlement, because of concern for wall tilting, rotation, or cracking (of rigid systems). If a combination wall and berm is to be constructed, consider specifying an embankment material that will result in an economical wall design. It may be desirable to use a cohesive material of uniform thickness that does not move when saturated with water for the upper portion of the berm.

www.EngineeringEBooksPdf.com

Wall alignment can be modified slightly when necessary to make adjustments for standard panel sizes or material sizes; to fit with existing features such as trees, signs, lights, or utilities; or to better meet safety or drainage requirements.

Often, wall designs are based on standard agency plans. Special designs may be required where a wall ties into a bridge abutment or retaining wall, where the wall height exceeds the standards, where lights or signs are constructed integrally with the wall, where the wall must also serve as a retaining wall, or where soil properties are outside the range of those anticipated in the design standards.

State and local government agencies sometimes mandate that noise wall corridors be developed. As part of roadway improvement, they anticipate a need by local residents that will help approve the roadway system.

9.9 STRUCTURAL DESIGN

9.9.1 Noise Barrier Design Loads

Wind Loads. In most cases, the wind load represents the main load. The design pressure depends upon the wind velocity, which should be based upon a 50-year mean recurrence interval (Fig. 9.6). The wind pressure is applied perpendicular to the wall surface to develop the design wind load. On the basis of AASHTO *Guide Specifications for Structural Design of Sound Barriers,* the pressure may be calculated from

$$\text{U.S. Customary units:} \quad P = 0.00256(1.3V)^2 C_d C_c \tag{9.1a}$$

$$\text{SI units:} \quad P = 0.613(1.3V)^2 C_d C_c \tag{9.1b}$$

where P = wind pressure, lb/ft^2 (N/m^2)
V = wind velocity, mi/h (m/s)
C_d = drag coefficient = 1.2 for noise walls
C_c = combined height, exposure, and location coefficient

The factor of 1.3 in Eq. (9.1) provides for wind gusts. Values of C_c and calculated wind pressures are given in Table 9.3 A and B. The following four conditions with increasing levels of wind pressure are included:

1. *Noise barriers not located on structures and having exposure B1.* This includes urban and suburban areas with numerous closely spaced obstructions having the size of single-family dwellings or larger that prevail in the upwind direction from the noise wall for a distance of at least 1500 ft (457 m).
2. *Noise barriers not located on structures and having exposure B2.* This includes urban areas with more open terrain that does not meet exposure B1.
3. *Noise barriers located on bridge structures, retaining walls, or traffic barriers* (*exposure C*). This is based on open terrain with scattered obstructions.
4. *Noise barriers not located on structures and having exposure D.* This includes coastal regions.

The interpretation of the surrounding terrain and identification of local conditions that may have increased effect on wind loads are left to the design engineer.

www.EngineeringEBooksPdf.com

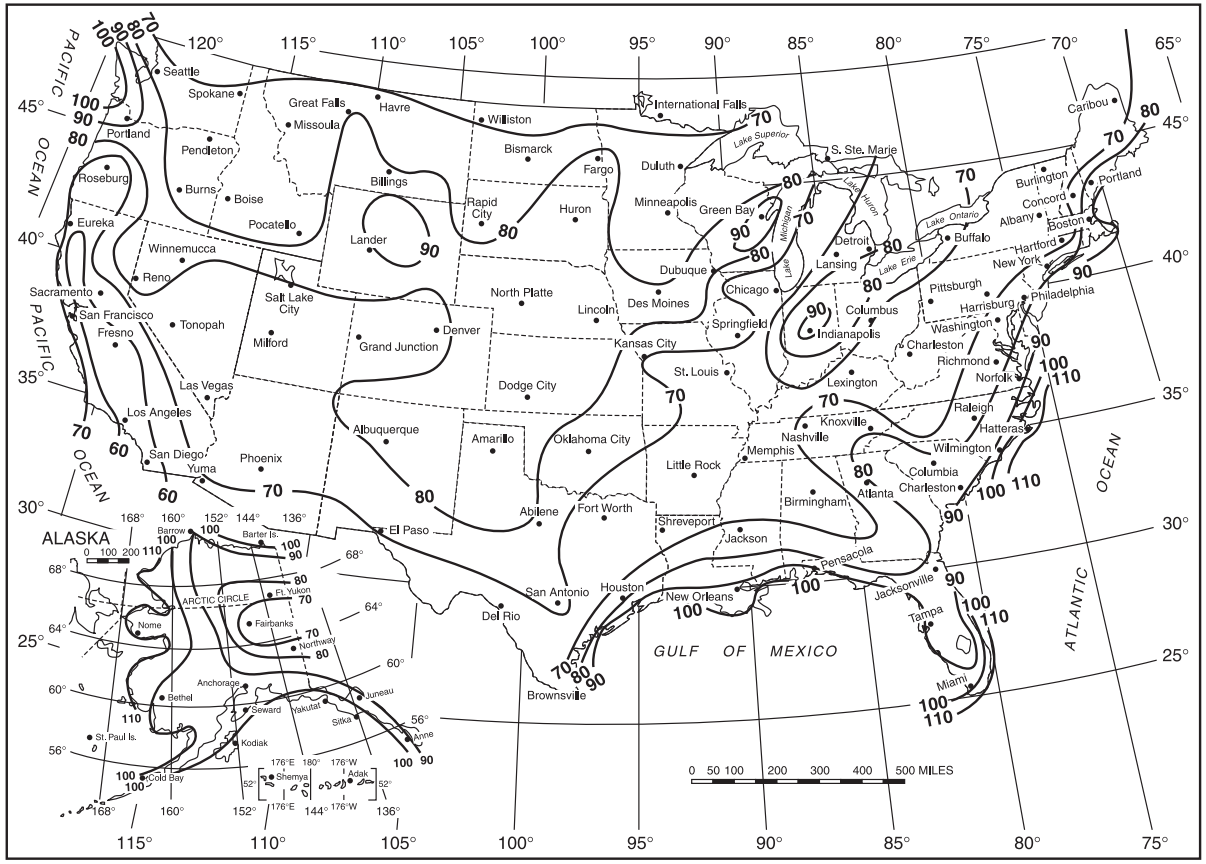

FIGURE 9.6 Wind velocities (mi/h) based on annual extreme-mile, 30 ft (9 m) above ground, 50-year mean recurrence interval. (*From* Guide Specifications for Structural Design of Sound Barriers, *AASHTO, Washington, D.C., 1989, with permission*)

www.EngineeringEBooksPdf.com

TABLE 9.3A Design Wind Pressures on Noise Walls

Location/ exposure	Height,* ft	Coefficient C_c	Pressure for indicated wind velocity, lb/ft^2				
			70 mi/h	80 mi/h	90 mi/h	100 mi/h	110 mi/h
Ground/B1	≤14	0.37	9	12	16	19	23
	14–29	0.50	13	17	21	26	31
	>29	0.59	15	20	25	31	37
Ground/B2	≤14	0.59	15	20	25	31	37
	14–29	0.57	19	25	32	39	37
	>29	0.85	22	28	36	44	53
Structure†/C	≤14	0.80	20	27	34	42	50
	14–29	1.00	25	33	42	52	63
	>29	1.10	28	37	46	57	69
Coastal/D	≤14	1.20	31	40	50	62	75
	14–29	1.37	35	46	58	71	87
	>29	1.49	38	50	63	77	94

**Height* refers to distance from average level of adjoining ground surface to centroid of loaded area in each height zone.

†*Structure* refers to noise walls on bridge structures, retaining walls, or traffic barriers.

Source: Adapted from AASHTO *Guide Specifications for Structural Design of Sound Barriers,* 1989, and *Interim Specifications*, 1992 and 2002, Washington, D.C.

TABLE 9.3B Design Pressures on Noise Barriers

Location/ exposure	Height,* m	Coefficient C_c	Pressure for Indicated wind velocity, N/m^2				
			30 m/s	35 m/s	40 m/s	45 m/s	50 m/s
Ground/B1	≤4.3	0.37	414	563	736	931	1150
	4.3–8.8	0.50	559	761	995	1259	1554
	>8.8	0.59	660	898	1174	1485	1834
Ground/B2	≤4.3	0.59	660	898	1174	1485	1834
	4.3–8.8	0.57	638	868	1134	1435	1772
	>8.8	0.85	951	1294	1691	2140	2642
Structure†/C	≤4.3	0.80	895	1218	1591	2014	2486
	4.3–8.8	1.00	1119	1523	1989	2517	3108
	>8.8	1.10	1231	1675	2188	2769	3419
Coastal/D	≤4.3	1.20	1343	1827	2387	3021	3729
	4.3–8.8	1.37	1533	2086	2725	3449	4258
	>8.8	1.49	1667	2269	2964	3751	4631

**Height* refers to distance from average level of adjoining ground surface to centroid of loaded area in each height zone.

†*Structure* refers to noise walls on bridge structures, retaining walls, or traffic barriers.

Source: Adapted from AASHTO *Guide Specifications for Structural Design of Sound Barriers,* 1989, and *Interim Specifications*, 1992 and 2002, Washington, D.C.

www.EngineeringEBooksPdf.com

Seismic Loads. AASHTO requires that, where structures are designed for seismic load, noise walls also be designed for such. They define the seismic load (EQD) as

$$\text{EQD} = A \times f \times D \tag{9.2}$$

where A = acceleration coefficient (varies from 0.05 to 0.40 depending on geographical location; see AASHTO *Guide Specifications,* Fig. 1-2.1.3)
D = dead load
f = dead load coefficient (2.50, on bridges; 0.75, not on bridges; 8.0, connections of prefabricated walls to bridges; 5.0, connections of prefabricated walls to retaining walls)

The product of A and f must not be taken as less than 0.10.

Other Loads. In addition to dead load, other loads that might be encountered include earth load, live load surcharge, and ice and snow load. When encountered, these loads can be developed from information in the AASHTO *Standard Specifications for Highway Bridges.* Increased allowable stress levels may be used for certain combinations, as discussed below.

9.9.2 Load Combinations

Noise barriers can be designed by working-stress design methods or load factor design. For the working-stress design method, the following load combinations should be considered:

$$\text{Group I: } D + E + \text{SC}$$

$$\text{Group II: } D + W + E + \text{SC}$$

$$\text{Group III: } D + \text{EQD} + E$$

$$\text{Group IV: } D + W + E + I$$

where D = dead load
E = lateral earth pressure
SC = live load surcharge
W = wind load
EQD = seismic load
I = ice and snow load

For load combination I, the stresses are limited to 100 percent of the basic allowable stresses. For load combinations II, III, and IV, the stresses are limited to 133 percent.

9.9.3 Design Criteria

The AASHTO *Guide Specifications* state that, for the design of noise barriers in concrete, timber, or steel, the design should conform to either the AASHTO *Bridge Specifications* or an industry-recognized design specification. Such sources may be referred to for allowable stress values and other details. For masonry walls, detailed design criteria are presented in the AASHTO *Guide Specifications.* Other materials can be designed using established engineering principles and appropriate industry specifications.

www.EngineeringEBooksPdf.com

9.10 FOUNDATION DESIGN

The capacity of the foundation soil should be determined using accepted engineering principles and measurement of material parameters such as cohesion and angle of friction, or on the basis of field data such as the standard penetration test or the shear vane test. (See Chap. 8 for pertinent information.) One agency uses the following for default values:

1. Use angle of friction $\phi = 30°$ for granular soils and a cohesion value of $c = 1000$ lb/ft^2 (48 kPa) for plastic soils to determine post embedment. Water encountered in soils above embedment depths will require special designs.
2. Use 2000 lb/ft^2 (96 kPa) for allowable bearing capacity unless higher values are approved by the soils engineer.
3. A maximum of 2 ft (600 mm) of unbalanced fill on one side of the noise wall will be allowed. Good compaction must be achieved on the low side of the wall prior to placing unbalanced fill.

The AASHTO *Guide Specifications* recommend the following safety factors for the design of spread footings that support noise walls:

Group	Overturning	Sliding
I	2.0	1.5
II	1.5	1.2
III	1.5	1.2
IV	1.5	1.2

For walls supported on two or more rows of piles, the design should follow procedures in *Standard Specifications for Highway Bridges* (AASHTO, Washington, D.C., 2004). For walls supported on a single row of piles, the pile must be designed as a column, considering both axial loads and bending. Also, the pile must be designed for the shear from the lateral loads.

For panel-and-post type walls, the embedment depth of the post can be determined using Rankine or Coulomb earth pressure theories. The following equation follows from static equilibrium analysis and applies for a pile or post on level ground:

$$0 = \frac{Rd^3}{12} - \frac{2Pd}{3} - \frac{P^2}{3Rd} - Ph \tag{9.3}$$

where P = applied ultimate lateral load, lb (N)
h = vertical distance from lateral load to top of embedment, ft (mm) (disregard upper 6 in (150 mm) of soil at ground surface)
R = net horizontal ultimate lateral soil pressure limit, lb/ft^2 (Pa) per ft (mm) of depth
d = required depth of embedment, ft (mm)

Note that both P and R are ultimate values. The design load must be increased by an appropriate load factor, and the resisting soil pressure decreased by an appropriate load factor.

Example—U.S. Customary units. $P = 200$ lb, $h = 6$ ft, and $R = 600$ (lb/ft^2)/ft. Determine d.

By trial and error, it is found that $d = 3.2$ ft satisfies Eq. (9.3). The final trial gives

$$0 = \frac{600(3.2)^3}{12} - \frac{2(200)(3.2)}{3} - \frac{200^2}{3(600)(3.2)} - 200(6)$$

www.EngineeringEBooksPdf.com

$$0 = 1638 - 427 - 7 - 1200$$

$$0 \approx 4 \qquad \text{(close enough; OK)}$$

The post should be embedded a distance of 3.2 + 0.5 = 3.7 ft below the ground surface.

The maximum moment in the pile or post can be expected to occur at a depth of 0.25*d*. In this case, the maximum moment is

$$M = P(h + 0.25d)$$

$$= 200(6 + 0.25 \times 3.2)$$

$$= 1360 \text{ ft} \cdot \text{lb}$$

Example—SI units. $P = 890$ N, $h = 1830$ mm, and $R = 0.0287$ Pa. Determine d.

By trial and error, it is found that $d = 975$ mm satisfies Eq. (9.3). The final trial gives

$$0 = \frac{0.0287(975)^3}{12} - \frac{2(890)(975)}{3} - \frac{(890)^2}{3(0.0287)(975)} - 890(1830)$$

$$0 = 2{,}216{,}739 - 578{,}500 - 9{,}436 - 1{,}628{,}700$$

$$0 \approx 103 \qquad \text{(close enough; OK)}$$

9.11 CONSTRUCTION

The following material is presented in the format of a typical specification used by one agency for the construction of noise barriers (noise walls). In addition to the type of wall included—timber wall with concrete posts—it can be adapted to walls of other types.

A. Miscellaneous Structure Removal

Abandoned structures and other obstructions shall be removed from the right-of-way and disposed of in accordance with DOT provisions except as modified below:

All debris resulting from the removal items and all other materials that become the property of the contractor and are not recycled into the project shall be disposed of outside the right-of-way in accordance with DOT provisions. This work shall be incidental to removal and salvage operations, and no direct compensation will be made therefor.

The contractor's attention is directed to possible privately owned appurtenances adjacent to the construction site that may need to be removed. If the private appurtenances are damaged, the contractor will be required to reinstate the appurtenances to satisfaction of owner. This work shall be considered incidental to the removal operations, and no direct compensation will be made therefor.

www.EngineeringEBooksPdf.com

B. Clearing and Grubbing at Construction Site

The engineer shall have authority to limit the surface area of erodible earth material exposed by clearing and grubbing, excavation, and borrow and fill operations and to direct the contractor to provide immediate permanent or temporary control measures to prevent contamination of adjacent streams and other watercourses, lakes, ponds, and areas of water impoundment. Cut slopes shall be seeded and mulched as the excavation proceeds to the extent considered desirable and practicable.

The contractor will be required to incorporate all permanent erosion control features into the project at the earliest practicable time as outlined in his/her accepted schedules. Temporary pollution control measures will be used when needed to correct conditions that develop during construction but were not foreseen during the design stage, when needed prior to installation of permanent erosion control features, or when needed temporarily to control erosion that develops during normal construction practices; by definition, such temporary measures are not associated with the permanent control features on the project.

Where erosion is likely to be a problem, clearing and grubbing operations should be so scheduled and performed that grading operations and permanent erosion control features can follow immediately thereafter if the project conditions permit; otherwise, temporary erosion control measures may be required between successive construction stages. Under no conditions shall the surface area of erodible earth material exposed at one time by clearing and grubbing exceed 750,000 ft^2 (70,000 m^2) without approval of the engineer.

C. Furnishing Concrete Post and Wood Noise Wall

This work shall consist of furnishing all materials for and constructing wood noise attenuator walls complete with concrete posts, and wood retaining wall, all in accordance with the plan details, the applicable DOT Standard Specifications, the required specifications for pigmented sealer and exterior wood surface stain, and the following:

1. General. All thickness and width dimensions of solid sawn wood for timber facing material indicated in the plans for wood wall construction shall be construed to be nominal dimensions unless otherwise indicated in the plans or these special provisions.

2. Materials

a. Concrete Posts. Concrete posts shall be constructed as detailed in the plan and the required specification on pigmented sealer.

b. Wood Noise Walls. The facing lumber and battens shall be any species of southern pine conforming to the applicable provisions of DOT, modified to the extent that the lumber shall contain no holes and have tight knots. No intermixing of lumber species will be permitted within any continuous section of wall. If the wall abuts any earth fill greater than 2 ft (600 mm), the facing planks installed below the top of the fill shall be 8- × 3-in (200- × 75-mm) or 6- × 3-in (150- × 75-mm) lumber with the 3-in (75-mm) dimension being rough-sawn. All facing lumber and battens shall be pressure preservative–treated with an approved waterborne preservative as provided hereinafter. Lumber treated with Millbrite will not be acceptable.

Facing boards shall be surfaced on two sides, and shall be tongue-and-grooved. All plank facing lumber shall be no. 1 structural grade or better. Facing lumber and battens shall be stamped with the appropriate grade mark.

c. Hardware. All hardware for noise wall shall be galvanized and meet the requirements of the American National Standards Institute (ANSI) and ASTM as to strength and testing.

www.EngineeringEBooksPdf.com

D. Preservative Treatment

All lumber shall be pressure-treated with a preservative in accordance with the provisions of AASHTO M133 and the American Wood Protection Association (AWPA) manual.

1. All wall facings and battens shall be treated with a pressure preservative as approved by AWPA.
2. Wood materials shall be treated as required for aboveground installation, or for installation in contact with ground or water, in accordance with the applicable provisions of AASHTO M133 with a retention level of 0.60 lb/ft^3 (9.6 kg/m^3).
3. All southern pine materials shall be free of sap stain (blue stain).
4. All wood members shall be kiln-dried to a moisture content of 15 percent or less after preservative treatment.
5. After completion of the preservative treatment, all lumber materials shall be protected from any increase in moisture content by covering or any other approved method until incorporated into the wall.
6. The same preservative treatment shall be used to treat bolt holes, saw cuts, etc., if any, and for any additional dressing deemed necessary by the engineer.
7. All treated wood members shall be cared for in accordance with the applicable provisions of AWPA *Standard for the Care of Preservative Treated Wood Products.*

E. Construction Requirements

1. Construction of wood noise attenuator walls, together with appurtenant posts, etc., shall be accomplished in accordance with the plan details, the applicable DOT Standard Specifications, these special provisions, or as otherwise approved by the engineer.
2. Nailing and fastening shall be accomplished in a manner that will avoid splitting boards. A 4-mil (0.10-mm) polyethylene sheeting may be placed between the planks and the earth for added protection when fill is being retained.
3. Joints shall be constructed in a manner that will completely arrest the passage of light. No daylight shall be visible through the joints 120 days after completion of the wall. The contractor is advised to take whatever measures are necessary to avoid excessive shrinkage or shifting that would cause the passage of light. Where passage of light does occur, the contractor shall take corrective action, in the form of caulking, or other means to the satisfaction of the engineer, at his/her own expense.
4. Storage of materials within the right-of-way will be permitted only as approved by the engineer.
5. Debris shall be disposed of outside the right-of-way as specified by the engineer. Posts shall be plumb after installation.
6. The trench and trench backfill shall be compacted by the ordinary compaction method. The trench bottom shall be compacted to 90 percent of maximum density, and the bedding to 95 percent and 90 percent on each side of the footing. The density control shall not apply to the topsoil. The layers of material to be compacted shall be placed and compacted simultaneously so that the backfill material will be raised uniformly throughout the entire embedment depth.

www.EngineeringEBooksPdf.com

F. Noise Wall Measurement and Payment

1. Concrete posts of each size will be measured separately by the length of the posts furnished and installed complete in place as specified. Payment will be made at the contract bid price per linear foot, which shall be compensation in full for all costs relative thereto.
2. Noise wall construction will be measured by the total front face area of the wall constructed (i.e., the area between the centers of end posts, and between the top of the wall and 6 in (150 mm) below the tabulated ground line).
3. Payment will be made for noise attenuator wall at the contract bid price per square foot, which price shall be compensation in full for all costs of constructing the wall complete in place as specified, except the appurtenant concrete posts, which shall be compensated for separately under the appropriate contract item provided.
4. Instead of the hand-driven "full-head" nail as shown in the plan, a reduced-head power-driven nail may be used to meet one of the following modifications:
   a. Use a nail one gauge heavier.
   b. Increase the number of nails used in each pattern by a minimum of 50 percent. For example, use 3 nails instead of 2, 5 instead of 3, 2 instead of 1.
5. In case of failure on the part of the contractor to control erosion, pollution, and siltation as ordered, the DOT reserves the right to employ outside assistance or to use its own forces to provide the necessary corrective measures. All expenses so incurred by the department, including its engineering costs, that are chargeable to the contractor as his/her obligation and expense, will be deducted from any monies due or coming due the contractor.

www.EngineeringEBooksPdf.com

www.EngineeringEBooksPdf.com

CHAPTER 10
VALUE ENGINEERING AND LIFE CYCLE COST

Harold G. Tufty, CVS, FSAVE
Editor and Publisher
Value Engineering and Management Digest
Washington, D.C.

Value engineering (VE) may be defined as a systematic method for identifying the function of a product or service, establishing its worth, and generating alternatives to provide the required function at the least life cycle cost. A discipline that evolved out of the necessity for finding alternative materials for manufacturing during the 1940s, it was originally applied to projects in the Department of Defense and in industry. First adopted for highways in California and Florida in the early 1970s, it has been used with increasing success for highway projects nationwide. Virginia's pioneering VE legislation in 1990 set a standard that resulted in a savings of over $565,000,000 over the next 17 years.

The impetus for using VE increased in 1995 when Congress passed the National Highway System (NHS) Designation Act, which included a provision requiring the Secretary of Transportation to establish a program that would require states to carry out a VE analysis for federal-aid projects of $25,000,000 or more. The Federal Highway Administration (FHWA) subsequently published its regulation (23 CFR Part 627) establishing the program on February 14, 1997.

Life cycle costing, or least-cost analysis, is an integral part of VE. It provides a rational means of comparing the costs of alternatives in terms of today's dollars, including the effects of initial cost, maintenance cost, and rehabilitation cost.

This chapter reviews the policies of the Federal Highway Administration on VE, and guidelines offered by the American Association of State Highway and Transportation Officials (AASHTO). It also explains the fundamentals of the process, provides detail on implementation methods, and cites examples of successful VE programs.

10.1 FHWA ROLE IN VALUE ENGINEERING

The FHWA's VE program applies to the federal-aid program under which authorized funds are distributed to states for state Department of Transportation (DOT) projects. According to the FHWA, the program is designed to (1) encourage state DOTs to use VE,

www.EngineeringEBooksPdf.com

TABLE 10.1 Summary of Savings in Federal-Aid Highway Programs, Fiscal Years 2003–2007

	2007	2006	2005	2004	2003
Number of studies	316	251	300	324	309
Cost of studies including administration, $ millions	$12.54	$8.15	$9.80	$7.67	$8.42
Estimated construction cost, $ billions	$24.81	$21.53	$31.58	$18.7	$20.48
Number of recommendations	2861	1924	2427	1794	1909
Value of recommendations, $ billions	$4.60	$3.06	$6.76	$3.04	$1.97
Number of approved recommendations	1233	996	1077	793	794
Value of approved recommendations, $ billions	$1.97	$1.785	$3.187	$1.115	$1.110
Return on investment	157:1	219:1	325:1	145:1	132:1

(2) ensure that National Highway System projects required by law and regulation (currently greater than $25,000,000 for federal-aid highway projects or $20,000,000 for bridges) receive VE reviews, (3) encompass a variety of VE activities focused on education and training, technical assistance, liaison with industry and states, promotional activities, and active participation in studies, and (4) focus on training federal, state, and local highway employees through the National Highway Institute's VE workshop.

Table 10.1 summarizes past VE savings in the federal-aid program over a 4-year period as reported by the FHWA. Savings in 2007 on highway programs totaled nearly $2,000,000,000. In addition to these savings, other federal departments generated significant VE savings.

Articles 10.1.1 through 10.1.4 are based on information excerpted from the website www.fhwa.dot.gov/ve. Further information is available in the FHWA text, "Value Engineering for Highways," available in each state DOT or FHWA office or from the FHWA VE coordinator.

10.1.1 Goals and Objectives

The FHWA states the following regarding VE goals and objectives:

> The goal of a VE study is to achieve design excellence. Its objectives are to improve quality, minimize total ownership costs, reduce construction time, make the project easier to construct, insure safe operations, and assure environmental and ecological goals. The VE team is looking for the optimum blend of scheduling, performance, constructability, maintainability, environmental awareness, safety, and cost consciousness. The VE process is not meant to criticize today's designs or insinuate that the regular highway design process is not providing acceptable designs. This is not the case. The designs being prepared today are good designs, they can be built, and they will function as intended. Highway designers do not deliberately design poor value into a project; yet, it happens.

10.1.2 Reasons for Poor Quality

Reasons cited for poor quality in some highway designs are as follows:

Lack of information
- Failure to get sufficient facts before starting.
- Lack of knowledge or misunderstanding of the full requirements of the original project plan.
- Decisions based on "educated guesses."

www.EngineeringEBooksPdf.com

Wrong beliefs
- Erroneous interpretations or conclusions of the facts.
- Unfortunate experiences with past applications of materials, etc.
- Bias against proven technology.

Habitual thinking
- Doing things "the same way we've always done them."
- Tendency to reuse what worked the last time.
- Copying standards of other agencies.
- Lack of attention to the current state-of-the-art.

Risk of personal loss
- Anything done over and over again minimizes risk through trial and error.
- Risk associated with trying something that you have not tried before.
- Decisions based on "nearly related" data, rather than the actual case.

Reluctance to ask for advice
- Designers are often very reluctant to seek advice from others in their field.
- Failure of designers to admit that they might not know all the answers.

Time pressures
- Need to provide a project design as quickly as humanly possible, sometimes even quicker.
- Pressure becomes so great that anything with a reasonable chance of working is designed into the project.
- Acceptance of the first workable solution in order to complete the design on time.
- No time to sit and contemplate.
- No time to sit and think up alternative approaches.

Negative attitudes
- Some people are reluctant to consider a change of any type regardless of its merit.
- Most designers feel they always provide the best, the first time, regardless of how much time they spend developing the design.

Rapidly changing technology
- Rapid strides taking place in the development of processes, products, and materials.
- Technology is constantly changing.
- No one person can be expected to be completely current in any field.

Strict adherence to "requirements"
- Requirements are often unrelated to required performance, materials, safety, or procedures.
- Assumed requirement when not specifically specified.
- Concentration on the development of a reliable system that exceeds all known and assumed requirements.
- Each unnecessary requirement that is met in a design costs money, but worse still, increases the chance of failure of the overall system.

Poor human relations
- Poor communications.
- Misunderstandings.
- Jealousy.
- Normal friction between human beings.

www.EngineeringEBooksPdf.com

10.1.3 Steps in VE Review Process

The VE review process uses a team of individuals representing different disciplines who do not have a vested interest in the project. The teams break down a project into its basic functions and then use creativity to find different ways to perform these functions. The teams provide management with as many recommendations as practicable. The recommendations are then evaluated by staff offices in specialty areas that may be impacted. Management must then decide, based on all available information, whether or not to approve the recommendations.

The following steps are used in every VE review:

- Identify the major elements of a project.
- Analyze the functions these project elements perform.
- Use brainstorming to develop several design alternatives to perform those functions.
- Evaluate the alternatives to ensure they do not degrade the project.
- Assign costs (including life cycle costs) to each of the most promising alternatives.
- Develop the promising alternatives into acceptable recommendations.

10.1.4 FHWA VE Policy Guide

The FHWA has developed the following federal-aid policy guide that provides much useful information for the application of VE:

1. *PURPOSE.* To provide policy guidance on the application of value engineering in the federal-aid highway program.
2. *AUTHORITY.*
   - ***a.*** Section 106(e) of Title 23, United States Code provides: "For such projects as the Secretary determines advisable, plans, specifications, and estimates for proposed projects on any Federal-aid system shall be accompanied by a value engineering or other cost reduction analysis."
   - ***b.*** Section 106(g) of Title 23, United States Code provides: "The Secretary shall establish a program to require States to carry out a value engineering analysis for all projects on the National Highway System [NHS] with an estimated total cost of $25,000,000 or more." The Federal Highway Administration published its regulation establishing this program on February 14, 1997.
   - ***c.*** Paragraph 6b(2) of DOT Order 1395.1A, Use of Value Engineering in the Department of Transportation, dated May 8, 1992, provides: "Each DOT Operating Administration should strongly encourage the use of VE in its grant awards or Federally assisted programs for major transportation projects throughout the planning, design and/or construction phases. This may include the use of VE proposals as a result of VE studies/analyses as well as VE incentive clauses in construction contracts."
   - ***d.*** Paragraph 9 of the Office of Management and Budget's (OMB) Value Engineering Circular A-131, dated May 21, 1993, provides: "Each agency shall report Fiscal Year results of using VE annually to OMB, except those agencies whose total budget is under $10 million or whose total procurement obligations do not exceed $10 million in a given fiscal year." The Circular also describes what VE data must be submitted and the format for submitting the data to OMB.

www.EngineeringEBooksPdf.com

3. *DEFINITIONS.*

a. *Life cycle cost:* The total cost of an item's ownership over its life cycle. This includes initial acquisition costs (right-of-way, planning, design, construction), operation, maintenance, modification, replacement, demolition, financing, taxes, disposal, and salvage value as applicable.

b. *Project:* A portion of a highway that a state proposes to construct, reconstruct, or improve as described in the preliminary design report or applicable environmental document. A project may consist of several contracts or phases over several years.

c. *Product or service:* Any element of a highway project from concept through maintenance and operation. In all instances, the required function should be achieved at the lowest life cycle cost consistent with requirements for performance, maintainability, safety, and aesthetics.

d. *Value engineering:* The systematic application of recognized techniques by a multidisciplinary team to identify the function of a project or service, establish a worth for that function, generate alternatives through the use of creative thinking, and provide the needed functions to accomplish the original purpose of the project, reliably, and at the lowest life cycle cost without sacrificing safety, necessary quality, and environmental attributes of the project.

e. *Value Engineering Change Proposal (VECP) clause:* A construction contract provision that encourages the contractor to propose changes in the contract requirements which will accomplish the project's functional requirements at less cost or improve value or service at no increase or a minor increase in cost. The net savings of each proposal is usually shared with the contractor at a stated reasonable rate.

4. *POLICY.* The FHWA will ensure that a VE study is performed on all federal-aid-funded NHS projects with an estimated cost (includes design, right-of-way, and construction costs) of $25 million or more, and on other federal-aid projects where its employment has high potential for cost savings. In addition, FHWA will strongly encourage state departments of transportation to use VE throughout highway project development, design, and construction.

5. *CHARACTERISTICS.* To be considered VE, the analysis process should incorporate each of the following characteristics:

a. A multidisciplinary team approach

b. The systematic application of a recognized technique (VE job plan)

c. The identification and evaluation of function, cost, and worth

d. The use of creativity to speculate on alternatives that can provide the required functions (search for solutions from new and unusual sources)

e. The evaluation of the best and lowest life cycle cost alternatives

f. The development of acceptable alternatives into fully supported recommendations

g. The presentation/formal reporting of all VE recommendations to management for review, approval, and implementation.

6. *APPLICATION.*

a. A VE analysis shall be applied to all federal-aid-funded NHS projects with estimated costs of $25 million or more; however, VE should not be limited to only projects of this scope. It can also be highly effective when used on other projects when there is potential for a significant ratio of savings to the cost of the VE study or substantial improvements in project or program effectiveness.

b. For maximum benefit, VE should be employed as early as possible in the project development/design process so valid VE recommendations can be implemented without delaying the progress of the project or causing significant

www.EngineeringEBooksPdf.com

rework of completed designs. States should schedule VE routinely into the project development/design process. While all projects will not necessarily benefit from the application of VE, the review process should be set up to consider all projects and a VE analysis should be applied to those projects offering the greatest potential for improvement and/or savings.

c. Recommendations from VE studies and VECPs should receive prompt reviews by state officials to determine their acceptability. States should also develop procedures for implementing accepted recommendations.

7. *BACKGROUND INFORMATION.* The FHWA's text "Value Engineering for Highways" provides further details on the VE technique and its applicability to highway projects and functions. It has been widely distributed as a part of FHWA's training effort and a copy should be available in each state DOT and FHWA office. Additional copies may be obtained from the FHWA VE coordinator. The American Association of State Highway and Transportation Officials (AASHTO) *Guidelines for Value Engineering* (AASHTO, Washington, D.C., 2001) also provides an excellent description of VE.

8. *FHWA RESPONSIBILITIES.*

a. Division office

(1) Designate a VE coordinator and encourage state to host VE training provided by the FHWA, a qualified VE consultant, and/or develop its own VE training.

(2) Encourage state to use VE by actively participating in VE studies and advising it that VE study costs are eligible (as preliminary engineering costs) for federal-aid participation.

(3) Ensure all applicable NHS projects receive a VE analysis and encourage additional studies of other projects.

(4) Ensure the state has an active VE program and encourage it to include a VECP clause in its construction contracts.

(5) Summarize the state's VE activity on all federal-aid projects annually and provide the information to the FHWA VE coordinator.

b. FHWA VE coordinator

(1) Promote VE and serve as the technical expert on VE matters for FHWA, state, and local highway agencies.

(2) Provide VE briefings to FHWA, state, and local executives and upper management.

(3) Provide VE training and technical expertise to FHWA, state, and local highway agencies. Assist states to develop VE programs.

(4) Coordinate VE with other FHWA activities aimed at cost reduction or product improvement.

(5) Compile VE activity data received from the division offices and prepare annual report for DOT.

(6) Represent FHWA in VE forums with the U.S. DOT and other federal and state governmental agencies, including membership in SAVE International (formerly the Society of American Value Engineers). Serve as FHWA's representative to the AASHTO VE Task Force.

9. *STATE DOT RESPONSIBILITIES.*

a. Each state shall establish a continuing VE program that ensures all applicable NHS projects will receive a VE analysis and provides for the review, approval, implementation, and documentation of the VE study recommendations. Individuals knowledgeable in VE shall be assigned the responsibility to coordinate and monitor the program. States should also develop a VE training program, a tracking and/or record keeping system, and a process to disseminate

www.EngineeringEBooksPdf.com

and publicize their VE results. This work may include the use of qualified VE specialists on a consulting basis.

b. States should include a VECP clause in their construction contracts to encourage contractors to propose changes in contract requirements which will do the following:

(1) Reduce project cost(s) or improve value or service at no increase or a minor increase in cost.

(2) Provide states with innovative contractor ideas or techniques to be considered when preparing plans, specifications, and estimates on future projects.

The net savings of each proposal should be shared with the contractor at a stated reasonable rate. Reimbursement for such share is eligible for pro rata reimbursement with federal-aid funds. States should retain the right to accept or reject all proposals and acquire all rights to use accepted VE proposals in current and future projects without restriction. An example VECP provision is contained in the AASHTO *Guidelines for Value Engineering.*

10. *USE OF CONSULTANTS.* States may employ qualified VE consultants to conduct VE studies on federal-aid projects or elements of federal-aid projects. Consulting firms should not apply VE to their own designs (the law prohibits persons involved in the project from being on the VE team). It is strongly recommended that consultants be qualified VE practitioners, be experienced in performing and leading VE studies (have participated in several VE studies as a team member and as a team leader), and have sufficient VE training, education, and experience to be recognized by SAVE International as meeting the requirements for certification.

11. *REPORTING.*

a. All VE studies and VECP conducted on federal-aid projects shall be used to prepare an annual VE summary report. At the end of the fiscal year, each division office and/or state DOT will prepare the annual VE summary report and submit it to the FHWA VE coordinator. Reports are due by November 10 of each year.

b. The FHWA VE coordinator shall prepare an annual report including an assessment of the effectiveness of efforts to encourage VE on federal-aid projects to the U.S. DOT by December 10 of each year.

10.2 AASHTO ROLE IN VALUE ENGINEERING

To assist state DOTs in the application of VE, the AASHTO Task Force on Value Engineering, originally organized in 1985, has developed the publication, *Guidelines for Value Engineering,* already cited. Portions of the publication* are summarized in Arts. 10.2.1 through 10.2.6. The AASHTO value engineering technical committee maintains a useful website, www.wsdot.wa.gov/partners/AASHTOVE. Also, a VE engineering conference is sponsored every 2 years.

AASHTO has taken the position that every member state should establish an ongoing VE program to improve design excellence and achieve cost and quality control. VE is seen as a means for addressing the problem of rising costs and diminishing resources through applications in many areas such as project development, construction, traffic operations, and maintenance.

*The portions of Art. 10.2 taken from this source are used with the permission of AASHTO.

www.EngineeringEBooksPdf.com

10.2.1 Elements of a Successful VE Program

AASHTO suggests the following as important elements of a successful VE program:

- A firm commitment of resources and support by executive management is the most important element for ensuring the success of a VE program.
- All levels of management must understand and support VE.
- A state VE program requires the development of a policy directive describing where, when, how, and to what specific areas of work the VE effort should be directed.
- It is essential to provide some degree of VE training and program familiarization at every level within the state organization.
- For optimal results in the project development phase, VE should be performed as follows:

  Early in the planning-design process to maximize potential product improvement and cost savings.

  On high-cost and/or complex projects.

  By a multidisciplinary team of professionals trained in VE techniques.
- A value engineering change proposal program to encourage contractors to develop construction VE proposals allows the state to benefit from a contractor's design and construction ingenuity, experience, and ability to work through or around bureaucratic restrictions. Some important elements of a successful, ongoing VECP program are the following:

  Processing of proposals must be kept simple and done quickly.

  Cost savings are shared with the contractor.

  Change proposals become the property of the state, and the concept may be used on future projects.

  Change proposals should not compromise any essential design criteria or preliminary engineering commitments.

  Change proposals cannot be the basis for a contract claim. The state agency has the option to reject, with good justification, contractors' proposals.
- It is essential that all VE team recommendations and contractor proposals be fairly reviewed and expeditiously evaluated for implementation.
- VE techniques can also be used to improve productivity in other areas of a state's transportation program, including traffic operations, maintenance processes, procedures and operations, standard plans and specifications, and design criteria and guidelines.
- VE programs within the state organization should be closely monitored, evaluated, and modified to ensure the program's effectiveness.

It is also emphasized that understanding and support of VE by top management are the most important factors in a successful VE program. Such support is needed initially to ensure adequate funding for training of staff and establishment of the program. Once the VE program is established, the continuing active involvement of top management is needed to create and maintain positive attitudes.

10.2.2 Benefits of a VE Program

The main benefit of a VE program is improvement of the benefit-to-cost ratio throughout state transportation programs. Other perceived benefits are as follows:

www.EngineeringEBooksPdf.com

- Design, construction, and maintenance standards are constantly being reviewed through VE team activities.
- The structured, functional approach using a job plan (see Arts. 10.3 and 10.4) provides trained employees with a new method of approaching problems.
- VE team members develop an appreciation for the concerns and issues of other functional areas or disciplines, and communications are often improved.
- Team work skills and team dynamics are enhanced in the design process.
- Designers improve or develop their skills in preparing and delivering to management logical, organized presentations supporting their views.
- After gaining VE experience, many designers find it comparatively easy to apply the principles in the regular design process.
- Implementing a VECP program has a potential for improving state/contractor relations through more cooperative processing of change proposals.
- Proven VE designs or techniques and VECP-accepted changes often have applications for numerous future projects or contracts, thereby providing continuing savings and other benefits.

10.2.3 Training

AASHTO recommends that orientation and training be provided at nearly every level within the organization, including team members, team leaders, and management. Executive management must understand and support the fundamentals and principles of VE for the program to be successful. VE administrators, team leaders, and team members need basic and subsequent training to ensure success of the VE process and the implementation of recommendations. An overview of the procedures and the benefits of VE should be provided to staff not directly involved to encourage understanding and support.

Training in VE is available from various sources, including the National Highway Institute and consultants. A combination of VE theory and hands-on experience is desirable. SAVE International (formerly Society of American Value Engineers) offers several forms of VE certification. (See www.value-eng.com.) To become certified, one must meet all of the employment, VE performance standards, formal training, professional growth, and professional contribution requirements established by SAVE. The following certifications are available:

- *A value methodology practitioner.* Individuals who are familiar with VE but whose primary occupation is not VE.
- *An associate value specialist.* Individuals familiar with VE, but who have not acquired enough points to become a certified value specialist.
- *A certified value specialist (CVS).* Individuals whose principal occupation is VE.

To become a CVS, one must attend a 40-h SAVE-certified Mod I VE workshop and a 24-h SAVE-certified Mod II VE workshop, have 50 percent or more of the job description relate to VE, perform a number of VE studies as a team member and as a team leader, write a paper on VE, and take a test. Normal time to become certified is 4 to 5 years.

10.2.4 Study Selection and Scheduling

As previously indicated, states must perform a VE analysis on all federal-aid-funded projects on the National Highway System having an estimated total cost (design,

www.EngineeringEBooksPdf.com

construction, right-of-way, and utilities) of $25 million or more. However, additional projects should be selected for study, based on providing the maximal opportunity to improve the public investment by quality enhancement or life cycle cost savings. AASHTO has identified the following typical characteristics of potential VE projects:

- Projects substantially exceeding initial cost estimates
- Complex or multipart projects or processes providing unique, but costly functions
- Items using critical or high-cost materials
- Items requiring difficult construction or fabrication procedures
- Items performing a questionable function
- Items appearing too costly to build, operate, or maintain
- Projects that have grown complex, possibly by development over a long period of time
- Major structures
- Projects with complicated or costly traffic control or detours

For optimal results, VE should be applied as early as possible after basic design elements and preliminary cost information have been developed. This way, design recommendations can be more readily incorporated; the earlier VE is applied, the greater the potential for savings. With proper timing and planning, the VE administrator can ensure that specific VE studies are accomplished without conflicting with the project schedule.

10.2.5 Team Structure

AASHTO gives the following guidance on structuring the VE team. A team of five to seven persons with diverse areas of expertise usually produces the best results. A team of fewer than five tends to limit the amount and variety of creative input, and a team of more than seven can be unwieldy. Teams should be structured so there is appropriate expertise to evaluate the major problem areas anticipated within the project, e.g., traffic, right-of-way, structures, soils, paving, etc. Including general expertise from the areas of design, construction, right-of-way, maintenance, or traffic operations makes for a good team balance.

Team Leader. One individual should be appointed as team leader to guide the team in its efforts and be responsible for its actions during the study. The team leader should be an individual who is very knowledgeable of, and proficient in, the VE process and able to direct the team's activities toward its goal. Additional training in motivation and leadership techniques may be warranted for team leaders. A VE consultant serving as team leader should be a certified value specialist with highway experience.

Team Members. Representatives from disciplines other than engineering can provide greater objectivity to a team effort. Expertise from outside the state organization (e.g., local agency, citizen groups, United States Forestry Service (USFS), FHWA, consultants, etc.) may be appropriate on certain projects. Federal law prohibits individuals directly involved in the design of a project from being on the VE team analyzing the project; however, the original designer is an excellent resource individual for the team to consult. Specific training in the concepts, application, and techniques of VE is highly desirable for those working as VE team members. Occasionally, a team may include one or two members who are untrained in VE, but highly skilled in disciplines that are vital to the study.

www.EngineeringEBooksPdf.com

10.2.6 Value Engineering Change Proposals

As described by AASHTO, VECP programs differ from other VE programs in that the construction contractors develop the recommendations. The contractors choose whether or not to participate, with the incentive for sharing in any cost savings realized. Thus, the states must create and manage a program that will be attractive to the contractors. This program is called by different names in various states, for example, Value Engineering Incentive Provision (VEIP), Value Engineering Incentive Clause (VEIC), and Cost-Reduction Incentive Proposal (CRIP).

A contractor's participation in a VECP program involves a certain amount of risk. It costs money to search for realistic savings that will be shared by the state, and the contractor cannot expect all proposals to be accepted. However, the program offers an opportunity for contractors to demonstrate ingenuity, innovation, and construction excellence, and to receive financial benefit.

Care should be taken to ensure that a VECP does not compromise any essential design criteria or any preliminary engineering commitments such as environmental mitigation measures. Specific construction elements, such as bridge-span lengths or type of noise barriers, may be excluded from consideration for a VECP, but such exclusions will limit potential savings opportunities. Any exclusions should be delineated in the specifications or other contract documentation.

Benefits. The VECP must not result in impairment of essential functions and characteristics of any part of the project including, but not limited to, service life, reliability, economy of operation, ease of maintenance, desired aesthetics, and safety. The VECP program offers benefits to the state when it (1) enhances the design at reduced cost to the state, (2) results in a net savings over the contract cost, or (3) advances the project completion date. The program offers a low-cost opportunity to use the experience and creative talents of the contractor. Contractors participating in the VECP program take pride in contributing actively to the final development and construction of the project.

Contract Documents. To invite proposals from the contractors, the state should include in the contract document a VECP section, specifically defining basic requirements and evaluation criteria. Before initiating a VECP program, a state may want to secure an interpretation from the attorney general or other appropriate source as to the legality of their VECP provisions. VECP specifications and requirements are described in Section 104.07 of the latest version of AASHTO's *Guide Specifications for Highway Construction* (visit the website www.aashto.org for information on how to obtain a copy). In an effort to promote a higher VECP participation, some states are studying the application of the VE job plan (see Arts. 10.3 and 10.4) in facilitated sessions with contractors that can include state employees.

Review Process. The review process for a VECP should include the development of a review schedule to ensure the reviewing agency can meet the contractor's time frame. VECPs occur during the construction phase of a project and time is usually short. A schedule must be developed for those offices and/or persons who must review and comment on the VECP before final disposition. There should be a single point of contact for each state, to ensure no required office or person is omitted from the review process. The single point of contact also can act to enforce the review schedule. All comments resulting from the review should be compiled and resolved, with a final accept/reject recommendation to management. Proper documentation is essential. Complete and accurate estimates are required for correct savings calculations. The final step in the review process is justification. This is not a trivial step. Timely, accurate notification of all parties involved may reduce confusion and litigation, which also can be avoided by adding language to the state's VECP provision.

www.EngineeringEBooksPdf.com

Securing Adequate Contractor Participation. The first step in securing adequate contractor participation is to be certain the VECP program encourages, rather than discourages, such participation. For instance, the sharing percentage must be equitable. The VECP requirements, policies, and procedures should not be so legalistic, stringent, or cumbersome as to discourage contractors from participating, and there should be flexibility to meet changing conditions. Past experience indicates contractors need to be oriented to the VECP program and educated about VE methodology and procedures. A state initiating a VECP program should do what is necessary to ensure an effective contractor orientation and education program is developed and conducted. Otherwise, many contractors probably will be reluctant to participate. AASHTO suggests the following approaches to contractor orientation and education:

- The state should work closely with contractor organizations during the whole of the VECP program planning process. It is important to allow contractors the opportunity to review all elements of the program and provide input. The payoffs from this kind of a joint effort, in contractor support and participation, can be considerable.
- The state should encourage contractors to develop and conduct VE training courses. Where the state is conducting VE training for its own staff, contractor staff also could attend such programs.
- The contractor orientation, education, and promotion program should be a continuing one. Continuing efforts could include regular and periodic distribution of VE information and discussion of VE during preconstruction conferences.

Most of these approaches are obvious, and certainly many others could be developed to fit particular conditions. It is important to provide a well-planned, aggressive, and imaginative contractor VE program to enhance the probability of the success of the VECP effort.

Even though initial contractor participation is secured through this type of promotion, the VECP program will not be successful unless a high level of participation is maintained. AASHTO offers the following considerations for maintaining contractor participation:

- The state must ensure adequate opportunities for participation by providing a broad incentive clause in contractors' standard specifications.
- Contractors must be assured of a fair and objective evaluation of their proposals. The state should take all reasonable measures to create positive attitudes toward contractor change proposals. It may be beneficial to involve the VE administrator in the day-to-day VECP.
- Contractors must be assured of timely processing of change proposals. To satisfy this requirement, the state must allocate adequate resources to the program. Additionally, to reduce the time and effort required by a contractor to submit a proposal, the proposal may be submitted first for evaluation. This initial proposal would outline the general technical concepts and the estimated savings.

10.3 VALUE ENGINEERING JOB PLAN CONCEPT

As discussed by Wilson (see David C. Wilson, "Value Engineering Applications in Transportation," NCHRP Synthesis 352, Transportation Research Board, 2005), the VE process may be referred to as the job plan, a defined sequence of activities that are undertaken before, during, and after a VE workshop. During the VE workshop, the VE

www.EngineeringEBooksPdf.com

team learns about the background issues, defines and classifies the project (or product or process) functions, identifies creative approaches to provide the functions, and then evaluates, develops, and presents the VE proposals to key decision makers. It is the focus on the functions that the project, product, or process must perform that sets VE apart from other quality-improvement or cost-reduction approaches.

The job plan consists of three work streams that are performed sequentially: the pre-workshop stage, workshop stage, and post-workshop stage. As defined by the SAVE Value Methodology Standard (see "Value Standard and Body of Knowledge," SAVE, 2007), the workshop stage includes the following six sequential phases. The terminology may differ from that used by some agencies.

- *Information phase*. The team collects and reviews project information to gain an appreciation of issues, concerns, and opportunities. This typically includes developing data models that will highlight high-cost or poor-performing aspects of the project.
- *Function analysis phase*. The team determines and classifies functions that the project, product, or process being studied must deliver. The team defines the project functions using a two-word active verb/measurable noun context. The team reviews and analyzes these functions to determine those that need improvement, elimination, or creation to meet project goals.
- *Creativity phase*. The team generates a broad range of ideas to achieve functional performance, typically using brainstorming techniques.
- *Evaluation phase*. Following a structured evaluation process, the team reviews and selects the ideas that offer the best potential for value improvement. Proper attention must be paid to determining project functions, performance requirements, and resource limits.
- *Development phase*. The team prepares VE proposals based on one or more ideas. Each proposal should provide an overview of how the idea is anticipated to work, a balanced assessment of its characteristics, and usually some measure of cost impacts (first or life cycle costs).
- *Presentation phase*. The team develops a report and presentation that documents the alternative(s) developed and the value improvement opportunity.

10.4 VALUE ENGINEERING JOB PLAN DETAIL

The VE job plan outlines those tasks or functions necessary to properly perform a VE study. Adherence to a definite plan is essential to achieving optimum results. Good results come from a good system, and a good system is one that covers all aspects of a problem or situation to the necessary degree. Use of the job plan provides

1. A vehicle to carry the study from inception to conclusion
2. A convenient way to maintain a written record of the effort as it progresses
3. Assurance that consideration has been given to facts that may have been neglected in the creation of the original design
4. A logical separation of the study into units that can be planned, scheduled, budgeted, and assessed
5. Assurance that proper emphasis is given to the essential creative work of a study and its analysis so that superior choices can be made for further development

www.EngineeringEBooksPdf.com

The job plan attempts to generate, identify, and select the best-value alternative(s) by making specific recommendations supported with the proper data and identifying the actions necessary for implementation. Further, it provides a proposed implementation schedule and a summary of benefits to the user. The VE job plan is a planned program that has been tested, is being used, and has been proved to work.

The VE effort must include all phases of the job plan. However, the proper share of attention given to each phase may differ from one application to another. Judgment is required in determining the depth to which each phase is performed, with consideration given to the resources available and the results expected.

An orientation (pre-workshop stage) is usually conducted by a VE manager prior to the assembling of a VE task team. This activity relates to the selection of ideas for VE projects and their planning and authorization. The VE team follows the VE job plan starting with the information phase after the item to be studied has been selected. The number of members of the VE team varies considerably, but usually the job plan is completed by a team of at least five persons.

10.4.1 Information Phase

Objectives. The first phase of the job plan has two basic objectives:

To obtain thorough understanding of the project, system, operation, or item under study by a rigorous review of all of the pertinent factual data

To define the value problem by means of functional description accompanied by an estimate of the cost and worth of accomplishing each basic function

Key questions. During this phase, the following key questions must be answered:

What is it?

What does it do?

What must it do?

What does it cost?

What is it worth? (What is the least the function could cost?)

Procedure

1. *Use good human relations.* The matter of human relations is of utmost importance to the success of any VE study. "People" problems are sometimes more difficult to resolve than technical problems. The effectiveness of a VE team leader's efforts depends upon the amount of cooperation the leader obtains from the engineers, designers, estimators, managers, etc. If one is skillful in approach, diplomatic when resolving opposing viewpoints, and tactful in questioning a design requirement or specification, one will minimize the problems of obtaining the cooperation necessary to do the job effectively.

2. *Collect information.* All pertinent facts concerning the project, system, operation, or item must be drawn together. Getting all the relevant facts and getting them from the best sources are of paramount importance. The VE team should gather complete information consistent with the study schedule. All relevant information is important, regardless of how disorganized or unrelated it may seem when gathered. The data gathered should be supported by tangible evidence in the form of copies of all appropriate

www.EngineeringEBooksPdf.com

documents. Where supported facts are not obtainable, the opinions of knowledgeable persons should be documented.

In addition to specific knowledge of the item, it is essential to have all available information concerning the technologies involved, and to be aware of the latest technical developments pertinent to the subject being reviewed. Knowledge of the various construction processes that may be employed is essential. The more information brought to bear on the problem, the more likely the possibility of a substantial cost reduction. Having all the above information would be the ideal situation, but if all of this information is not available, it should not preclude the performance of the VE effort.

10.4.2 Function Analysis Phase

The determination of functions is a requisite for all value studies. The decision to pursue the project through the remaining phases of the job plan can be made only by determining function, placing a worth on each required function, and then comparing worth against actual or estimated cost. The determination of function should take place as soon as sufficient information is available to permit determination of true requirements. All members of the VE study team should participate in this exercise because the determination of required function is vital to subsequent phases of the job plan.

10.4.3 Creativity Phase

Objective. The objective is to generate, by creative techniques such as brainstorming, numerous alternative means for accomplishing the basic function(s) identified.

Key Question. Accomplishing this phase should result in answering the question "What else will do the job, that is, perform the basic function(s)?" The completeness and comprehensiveness of the answer to this question determine to a very high degree the effectiveness and caliber of value work. The greater the number and quality of alternatives identified, the greater the likelihood of developing an outstanding solution. Additional alternatives that have not been considered will usually exist regardless of the skill and proficiency of the study team.

Procedure. Consideration of alternative solutions should not formally begin until the problem is thoroughly understood. All members of the VE study team should participate, for the greater the number of ideas conceived, the more likely that really effective, less costly alternatives will be among them. A proper frame of mind is important at this stage of the study; creative thinking should replace the conventional. It should be a unique flight of the imagination, undertaken to generate numerous alternative methods of providing the necessary function(s).

Judicial thinking does not belong in this phase. As an aid to speculative thought, the techniques of creative thinking, such as brainstorming, should be employed. Every attempt should be made during this phase to depart from ordinary patterns, typical solutions, and habitual methods. Experience indicates that it is often the new, fresh, and radically different approach that uncovers the best-value solution. The individual or group members may supplement their ideas with those of others—everyone is expected to make a contribution.

The best solution may be complete elimination of the present function or item. This possibility should not be overlooked during the initial phases of this step. Perhaps some aspect can be modified which will permit elimination of the function under study. Only

www.EngineeringEBooksPdf.com

after determining that the function must remain should the study group look for alternative ways to perform the same function at the lowest conceivable cost. Free use of imagination is encouraged so that all possible solutions are considered.

A partial list of questions that can be used to stimulate and trigger ideas is given in Table 10.2. The questions shown can be rephrased by substituting terms like *project, system, item,* or *procedure* for the words *it* or *part* when appropriate.

Techniques

1. *Blast, create, and refine.* This theme has often been used by value engineers. *Blast*—get off the beaten path. *Create*—rally for an unusual idea; reach way out for another approach. *Refine*—strengthen or add to develop an idea to perform basic functions in a new or unique manner.
2. *Functional comparison.* Conduct a creative problem-solving session (brainstorming) in which new and unusual contributions of known things or processes are combined and/or rearranged to provide different ways to perform basic functions.
3. *Simple comparison.* Conduct a thorough search for other items that are similar in at least one significant characteristic to the study item. Determine whether they can be modified to satisfy basic functions.
4. *Scientific search.* Conduct a search for other scientific disciplines capable of performing the same basic function. This often involves interviewing specialists in disciplines that did not previously contribute to solving the problem. An industry (or its representatives) that specializes in some highly skilled technique can often make a substantial contribution when called upon for technical assistance.

10.4.4 Evaluation Phase

Objectives. The purpose of this phase is to select the most promising alternatives from among those generated during the previous phase. During the creativity phase there is a conscious effort to prohibit any judicial thinking so as not to inhibit the creative process. But in the evaluation phase, all the alternatives must be critically evaluated because many of them may not be feasible. The alternatives are studied individually and/or grouped for the best solution. Identifying function may seem like a simple process—so simple, in fact, that it seems only a "simple" mind would be required to get the job done. In some ways this is true; a mind that can work in a simple, direct way is required—a mind with the ability to reduce concepts, ideas, and analyses to their best common denominators. The emphasis on function in this phase is what makes the VE approach radically different from any other cost reduction effort.

Key Questions. The following questions must be answered about all alternatives being developed during this phase:

What does each alternative cost?

Will each perform the basic functions?

Techniques. Several techniques are available by which alternative ideas can be evaluated and judged. Comparisons can be made between the various advantageous and disadvantageous features of the alternatives under consideration. Advantages and disadvantages of each alternative can be listed and then the ideas sorted according to the relative numbers of advantages and disadvantages. A system of alternately using creative

www.EngineeringEBooksPdf.com

TABLE 10.2 Questions to Stimulate Ideas

A. Idea stimulators
Eliminate—combine:
Can it be eliminated entirely?
Can part of it be eliminated?
Can two parts be combined into one?
Is there duplication?
Can the number of different lengths, colors, types be reduced?
Standardize—simplify:
Could a standard part be used?
Would a modified standard part work?
Does the standard contribute to cost?
Does anything prevent it from being standardized?
Is it too complex?
Can connections be simplified?
Challenge—identify:
Does it do more than is required?
Does it cost more than it is worth?
Is someone else buying it at lower cost?
What is special about it?
Is it justified?
Can tolerances be relaxed?
Have drawings and specifications been coordinated?
Maintain—operate:
Is it accessible?
Are service calls excessive?
Would you like to own it and pay for its maintenance?
Is labor inordinate to the cost of materials?
How often is it actually used?
Does it cause problems?
Have users established procedures to get around it?
Requirements—cost:
Are any requirements excessive?
Can less expensive materials be used?
Is it proprietary?
Are factors of safety too high?
Are calculations always rounded off on the high side?
Would a thinner material work?
Could a different finish be used?

B. Analysis techniques
Review all phases of the program being evaluated (speculation phase).
Designate the subordinate problems requiring solution (analysis phase).
Determine the data that might help with the evaluation (speculation phase).
Determine the most likely sources of data (analysis phase).
Conceive as many ideas as possible that relate to the problem (speculation phase).
Select for further study ideas most likely to lead to a solution (analysis phase).
Consider all possible ways to test the ideas chosen (speculation phase).
Select the soundest ways of testing the ideas (analysis phase).
Decide on the final idea to be used in the program (analysis phase).

(*Continued*)

www.EngineeringEBooksPdf.com

TABLE 10.2 Questions to Stimulate Ideas (*Continued*)

C. Analysis criteria
Will the idea work?
Can it be modified or combined with another?
What is the savings potential?
What are the chances for implementation?
What might be affected?
Who might be affected?
Will it be relatively difficult or easy to make the change?
Will it satisfy all the user's needs?

and judicial thinking processes for each basic idea to be evaluated can be applied according to the steps shown in the Analysis Techniques portion of Table 10.2.

Procedure. Evaluation may be accomplished either by the generating group or by an independent group. Authorities disagree upon which approach is better. The disagreement grows out of the question of whether people who generate ideas can be objective enough in evaluating them.

1. *Establish criteria.* The first step is to develop a set of evaluation criteria or standards by which to judge the ideas. In developing these criteria, the team should try to anticipate all effects, repercussions, and consequences that might occur in trying to accomplish a solution. The resultant criteria should, in a sense, be a measure of sensitivity to problems (which might be inherent in changes caused by the new idea). In Table 10.3, three sets of criteria that could be used in the analysis phase are presented under Possible ratings. Factors such as these are really the yardsticks by which the effectiveness of each idea can be tested.

2. *Screen ideas.* The next step in the procedure is the actual ranking, or rating, of ideas according to the criteria developed. No idea should be summarily discarded; all should be given this preliminary evaluation as objectively as possible. In Table 10.3, a three-part system that can be used to rate ideas is presented under Alternative idea. Ratings and their weights are based on the judgment of persons performing the evaluation. This initial analysis will produce a shorter list of alternatives, each of which has passed the evaluation standards set by the team.

TABLE 10.3 Typical Analysis Rating System

Alternative idea	Possible ratings
Ability to perform basic function	Excellent Good Fair Poor
Usability of the idea	Use now Modify Hold Reject
Ease of idea implementation considering complexity and schedule	Simple idea Moderately complex Complex idea

www.EngineeringEBooksPdf.com

3. *Define alternatives.* The remaining alternatives can be ranked according to an estimate of their relative cost reduction potential. The ranking may be based on nothing more than relative estimates comparing the elements, materials, and processes of the alternatives and the original or present method of providing the function. The surviving alternatives are then developed further to obtain more detailed cost estimates. The cost estimating for each alternative proceeds only if the preceding step indicates it still to be a good candidate. Although the analysis phase is the responsibility of the VE team, authorities and specialists should be consulted in estimating the potential of these alternatives. Cost estimates must be as complete, accurate, and consistent as practicable to minimize the possibility of error in assessing the relative economic potential of the alternatives. Specifically, the method used to determine the cost of the original should also be used to cost the alternatives.

4. *Make final selection.* After the detailed cost estimates are developed for the remaining alternatives, one or more are selected for further study, refinement, testing, and information gathering. Normally, the alternative with the greatest savings potential will be selected. However, if several alternatives are not decisively different at this point, all should be developed further.

10.4.5 Development Phase

Objective. In the development phase, the alternatives that have survived the selection process are developed into firm, specific recommendations for change. The process involves not only detailed technical and economic testing but also an assessment of the probability of successful implementation.

Key Questions. Several questions must be answered about each alternative during the development of specific solutions:

Will it work?

Will it meet all necessary requirements?

Who has to approve it?

What are the implementation problems?

What are the costs?

What are the savings?

Procedures

1. *General.* To satisfy the questions above, each alternative must be subjected to:
- ***a.*** Careful analysis to ensure that the user's needs are satisfied
- ***b.*** A determination of technical adequacy
- ***c.*** The development of estimates of costs and implementation expenses, including schedules and costs of all necessary tests
- ***d.*** Consideration of changeover requirements and their impact

2. *Develop convincing facts.* As in the information phase, the use of good human relations is of considerable importance to the success of the development phase. In developing answers to the questions above, the VE team should consult with personnel knowledgeable about what the item must do, within what constraints it must perform, how dependable the item must be, and under what environmental conditions it must operate. Technical problems related to design, implementation, procurement, or

www.EngineeringEBooksPdf.com

operation must be determined and resolved. Consideration must also be given to impact in areas such as safety, fire protection, maintenance, and supply support.

3. *Develop specific alternatives.* Those alternatives that stand up under close technical scrutiny should be followed through to the development of specific designs and recommendations. Work on specifics rather than generalities. Prepare drawings or sketches of alternative solutions to facilitate the identification of problem areas remaining in the design, and to facilitate detailed cost analysis. Perform a detailed cost analysis for proposed alternatives to be included in the final proposal.
4. *Development implementation plans.* Anticipate problems relating to implementation, and propose specific solutions to each. Particularly helpful in solving such problems are conferences with specialists. Develop a specific recommended course of action for each proposal that details the steps required to implement the idea, who is to do it, and the time required. Ask for ideas from the office that will approve or disapprove the recommendation.
5. *Testing.* When testing is involved, the VE team may arrange the necessary testing and evaluation, although normally this will be done by other appropriate personnel in the organization. This testing and evaluation should be planned for and scheduled in the recommended implementation process.
6. *Select first choice.* Finally, one alternative should be selected for implementation as the best-value (best overall cost reduction, usually) alternative, and one or more other recommendations selected for presentation in the event the first choice is rejected by the approval authority. The implementation schedule that will yield the greatest cost reduction should also be indicated.

10.4.6 Presentation Phase

Objective. The presentation phase involves the actual preparation and presentation of the best alternatives to persons having the authority to approve the VE proposals. This phase of the VE job plan includes the following steps:

1. Prepare and present the VE proposals.
2. Present a plan of action that will ensure implementation of the selected alternatives.
3. Obtain a decision of positive approval.

Discussion. A value engineering proposal (VEP) is almost without fail a challenge to the status quo of any organization. It is a recommendation for change. The recommendation was developed through a team effort, and its adoption is dependent upon another team effort. The success of a VE project is measured by the savings achieved from implemented proposals. Regardless of the effort invested and the merits of the proposal, the net benefit is zero, or is negative, if the proposals are not implemented. Presenting a proposal and subsequently guiding it to implementation often requires more effort than its actual generation. We review here some principles and practices that have been successfully used to facilitate the approval of VEPs:

1. *Form.* Presentation of a VEP should always be written. Oral presentation of study results is most helpful to the person who is responsible for making the decision; however, it should never replace the written report. A written report normally demands and receives a written reply, whereas oral reports can be forgotten and overlooked as soon as they are presented. In the rush to wrap up a project, promote a great idea, or save the laborious effort of writing a report, many proposals have fallen by the

www.EngineeringEBooksPdf.com

wayside because the oral presentation came first and was inadequate. The systematic approach of the VE job plan must be followed all the way through to include the systematic, meticulous, careful preparation of a written report. From this will evolve a more concise and successful oral presentation.

2. *Content.* Management responsible for review and approval must base its judgment on the documentation submitted with a proposal. The proposal and supporting documentation should provide all of the data the reviewer will need to reach a decision. Top management is primarily concerned with net benefit and disposition. A manager either may be competent in the areas affected by the proposal or may rely on the advice of a specialist. In either case, completely documented proposals are far more likely to be implemented. Generally, proposals should contain sufficient discussion to ensure the reviewer that performance is not adversely affected, supporting technical information is complete and accurate, potential savings are based on valid cost analysis, and the change is feasible.

3. *VEP acceptance.* There are many hints that may be offered to improve the probability of and reduce the time required for acceptance and implementation of proposals. Those that appear to be most successful are as follows:

a. *Consider the reviewer's needs.* Use terminology appropriate to the training and experience of the reviewer. Each proposal is usually directed toward two audiences. First is the technical authority, who requires sufficient technical detail to demonstrate the engineering feasibility of the proposed change. Second are the administrative reviewers, for whom the technical details can be summarized while the financial implications (implementation costs and likely benefits) are emphasized. Long-range effects on policies, procurement, and applications are usually more significant to the manager than to the engineer.

b. *Prepare periodic progress reports—"no surprises."* The manager who makes an investment in a VE study expects to receive periodic progress reports with estimates of potential results. Reporting is a normal and reasonable requirement of management. It helps ensure top management awareness, support, and participation in any improvement program. There are very few instances where managers have been motivated to act by a one-time exposure at the "final presentation," no matter how "just" the cause. Therefore, it is advisable to discuss the change with the decision makers or their advisors prior to its submittal as a formal VEP. This practice familiarizes key personnel with impending proposals, and enables them to evaluate them more quickly after submittal. No manager likes to be surprised. Early disclosure may also serve to warn the originators of any objections to the proposal. This "early warning" will give the originators opportunity to incorporate modifications to overcome the objections. Often, the preliminary discussions produce additional suggestions that improve the proposal and enable the decision maker to contribute directly. If management has been kept informed of progress, the VEP presentation may be only a concise summary of final estimates and pro and con discussions, and perhaps trigger formal management approval.

c. *Relate benefits to organizational objectives.* The VEP that represents an advancement toward some approved objective is most likely to receive favorable consideration from management. Therefore, the presentation should exploit all of the advantages a VEP may offer toward fulfilling organizational objectives and goals. When reviewing a VEP, the manager normally seeks either lower total cost of ownership, or increased capability for the same or lesser dollar investment. The objective may be not only savings but also the attainment of some other mission-related goal of the manager.

d. *Support the decision maker.* The monetary yield of a VEP is likely to be improved if it is promptly implemented. Prompt implementation, in turn, is

www.EngineeringEBooksPdf.com

dependent upon the expeditious approval by the decision makers in each organizational component affected by the proposal. These individuals should be identified and the entire VE effort conducted under their sponsorship. The VE group becomes the decision maker's staff, preparing information in such a manner that the risk against the potential reward can be weighed. Like any other well-prepared staff report, each VEP should

- Satisfy questions the decision maker is likely to ask
- Respect the decision maker's authority
- Permit the decision maker to preserve professional integrity
- Imply assurance that approval would enhance image
- Include sufficient documentation to warrant a favorable decision with reasonable risk factors (both technical and economic)

e. *Minimize risk.* If VE proposals presented to management are to be given serious consideration, they should include adequate evidence of satisfactory return on the investment. Often, current or immediate savings alone will ensure an adequate return. In other cases, life cycle or total program savings must be considered. Either way, evidence of substantial benefits will improve the acceptability of a proposal.

The cost and time spent in testing to determine the acceptability of a VE proposal may offset a significant portion of its savings potential. Committing such an investment with no guarantee of success constitutes a risk that could deter acceptance of a VEP. In some cases this risk may be reduced by prudent design and scheduling of test programs to provide intermediate assurances indicating the desirability of continuing with the next step. Thus, the test program may be terminated or the proposal modified when the concept first fails to perform at an acceptable level. Major expenditures for implementing proposed VE actions should not be presented as a lump sum aggregate, but rather as a sequence of minimum risk increments. A manager may be reluctant to risk a total investment against total return, but may be willing to chance the first phase of an investment sequence. Each successive investment increment would be based upon the successful completion of the previous step.

f. *Combine testing.* Occasionally, a significant reduction in implementation investment is made possible by concurrent testing of two or more proposals. Also, significant reductions in test cost can often be made by scheduling tests into other test programs scheduled within a desirable time. This is particularly true when items to be tested are part of a larger system also being tested. However, care must be exercised in instances of combined testing to prevent masking the feasibility of one concept by the failure of another.

g. *Show collateral benefits of the investment.* Often VE proposals offer greater benefits than the cost improvements specifically identified. Some of the benefits are collateral in nature and difficult to express in monetary terms. Nevertheless, collateral benefits should be included in the calculations. The likelihood of acceptance of the VEP is improved when all its collateral benefits are clearly identified and completely described.

h. *Acknowledge contributors.* An implemented VE proposal always results from a group effort. There is a moral obligation to identify all individuals and data sources contributing to a proposal. Identification of contributors also provides the reviewers with a directory of sources from which additional information may be obtained. Individuals, departments, and organizations should be commended whenever possible. This recognition promotes cooperation and participation essential to the success of subsequent VE efforts.

i. *Prepare the oral presentation.* The oral presentation can be the keystone to selling a proposal. It gives the VE team a chance to ensure that the written proposal is

www.EngineeringEBooksPdf.com

correctly understood and that proper communication exists between the parties concerned. Effectiveness of the presentation will be enhanced if

- The entire team is present and is introduced
- The presentation is relatively short with time for questions at the end
- The presentation is illustrated through the use of visual aids such as mock-ups, models, slides, or flip charts
- The team is prepared with sufficient backup material to answer all questions during the presentation

10.4.7 Post-Workshop Stage

Objective. The VE manager must ensure that approved recommendations are converted into actions. Until this is done, savings to offset will not be achieved. Three major objectives of this phase are:

1. To provide assistance, clear up misconceptions, and resolve problems that may develop in the implementation process
2. To minimize delays encountered by the proposal in the implementation process
3. To ensure that approved ideas are not modified during the implementation process in such a manner as would cause them to lose their cost-effectiveness or basis for original selection

Implementation Investment. The need to invest in order to save must be emphasized when submitting VEPs. Some degree of investment is usually required if a VE opportunity is to become a reality. Funds and/or personnel for implementation have to be provided. The key to successful implementation lies in placing orders for the necessary actions into the normal routine of business. Progress should be reviewed periodically to ensure that any roadblocks that arise are overcome promptly.

Expediting Implementation. One of the fastest ways to achieve implementation of an idea is to effectively utilize the knowledge gained by those who originated it. Whenever possible, the VE team should be required to prepare first drafts of documents necessary to revise handbooks, specifications, change orders, drawings, and contract requirements. Such drafts will help to ensure proper translation of the idea into action and will serve as a baseline from which to monitor progress of final implementation. To further ensure proper communication and translation of the idea onto paper, the VE team should review all implementation actions prior to final release.

Monitoring Progress. Implementation progress must be monitored just as systematically as the VEP development. It is the responsibility of the management or the VE manager to ensure that implementation is actually achieved. A person should be designated by name with responsibility to monitor all deadline dates in the implementation plan.

Objective. The last phase of the job plan has several objectives; these might seem quite diverse, but when achieved in total, they will serve to foster and promote the success of subsequent VE efforts:

1. Obtain final copies of all completed implementation actions.
2. Compare actual results with original expectations.
3. Submit cost savings achievement reports to management. This will allow calculation of the total return on investment (ROI) of the VE effort.

www.EngineeringEBooksPdf.com

4. Submit technical reports to management for possible use elsewhere.
5. Evaluate conduct of the project to identify problems that arose and recommend corrective action for the next project.
6. Initiate recommendations for potential VE study on ideas evolving from the study just completed.
7. Screen all contributors to the VEP for possible receipt of an award and initiate recommendations for appropriate recognition.

Discussion. A VE project is not completed with implementation of an idea. Full benefit is not derived from a VEP until the follow-up phase is completed. Until then, the records on a project cannot be closed. It is the responsibility of the VE manager to designate some individual to complete this phase. Certain key questions must be answered to assess accomplishments:

1. Did the idea work?
2. Did it save money?
3. Would you do it again?
4. Could it benefit others?
5. Has it been forwarded properly?
6. Has it had proper publicity?
7. Should any awards be made?

10.5 FAST DIAGRAMMING AND THE JOB PLAN

Function analysis system technique (*FAST*) is a diagramming technique to graphically show the logical relationships of the functions of an item, system, or procedure. FAST was developed in 1964 by Charles V. Bytheway at the UNIVAC Division of the Sperry Rand Corporation. Prior to the development of FAST, one had to perform a function analysis of an item by random identification of functions. The basic function had to be identified by trial and error, and one was never quite sure that all functions had been uncovered. FAST provides a system to do a better job in function analysis.

10.5.1 Purpose of the FAST Diagram

The FAST diagram should be created during the information phase of the VE job plan by the whole VE team. When used in conjunction with a value study, the FAST diagram serves the following purposes:

1. It helps organize random listing of functions. When answering the questions "What is it?", "What does it do?", "What must it do?", the study team develops many verb-noun function solutions at all levels of activity, which the FAST diagram can help sort out and interrelate.
2. It helps check for missing functions that might be overlooked in the above random function identification process.
3. It aids in the identification of the basic function or scope of the study.
4. It deepens and guides the involvement, visualization, and understanding of the problem to be solved and the proposed changes.

www.EngineeringEBooksPdf.com

5. It demonstrates that the task team has completely analyzed the subject or problem.
6. It tests the functions through the system of determinate logic.
7. It results in team consensus in defining the problem in function terms and aids in developing more creative valid alternatives.
8. It is particularly helpful in "selling" the resulting changes to the decision makers.

10.5.2 Guidelines for FAST Diagrams

Figure 10.1 depicts the diagramming conventions to be used in preparing a FAST diagram. The relative positions of functions as displayed on the diagram are also levels of activity. The FAST diagram is a horizontal graphical display based on system functions rather than system flowcharting or components. Level 1 functions, the higher-level functions, appear on the left side of the FAST diagram, with lower-level activity successively graphed to the right as shown. In most cases, when conducting a VE study, various levels of activity of verb-noun functions will be automatically suggested as the basic function of an item or a system.

The FAST diagram is just a tool. It is the process used in creating the diagram that is important, not the final diagram itself or its appearance. There is no such thing as a

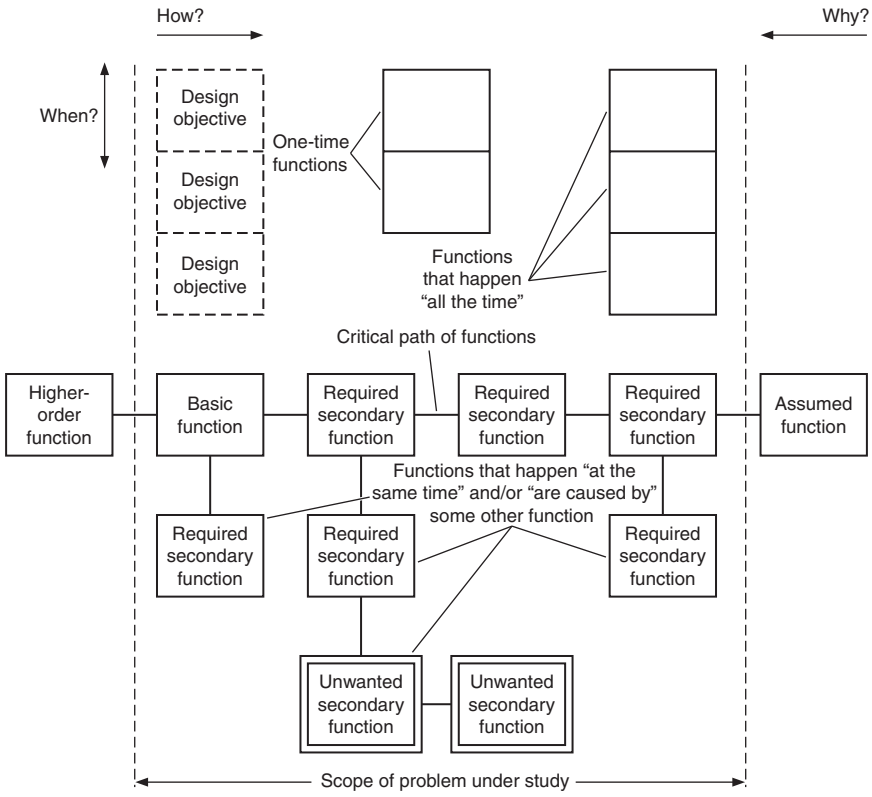

FIGURE 10.1 FAST diagram: functional analysis system technique.

www.EngineeringEBooksPdf.com

"right" or perfect schoolbook solution that each diagrammer should be able to create, if he or she had perfect knowledge of the technique and theory. Yet if the diagram logic is logical to the diagrammer, it will normally be logical to a reviewer. And if it is not, then the FAST diagram will have served another purpose—communication of a misunderstanding in statement of the problem. That is also valuable to know. With these things in mind, consider the following guidelines in preparing a diagram:

1. Show the scope of the problem under study by two vertical dashed lines, one to the extreme left and one to the extreme right of the diagram. Everything that lies between the two scope lines is defined as the problem under study.
2. Every FAST diagram will have a "critical path of functions" going from left to right across the scope lines.
3. On that critical path should be found only required secondary functions, the basic function(s), and the higher-order function.
4. The higher-order function will lie to the immediate left of the left scope line.
5. The basic function(s) will always lie to the immediate right of the left scope line.
6. All other functions on the critical path will lie to the right of the basic function and will be the required secondary functions (not normally aesthetic or unwanted secondary functions).
7. Any "assumed" functions lie to the right of the right-hand scope line.
8. All other secondary functions the item performs will lie either above or below the critical path of functions. These functions can be required secondary functions, aesthetic functions, or unwanted functions.
9. If the function "happens at the same time as" and/or "is caused by" some function on the critical path, place the function below that critical path function.
10. If the function happens "all the time" the system is doing its work, place it above the critical path function to the extreme right of the diagram.
11. If there are specific design objectives or general specifications to keep in mind as the diagram is constructed, place them above the basic function and show them as dotted boxes.
12. All "one-time" actions are placed above the critical path and in the center area of the diagram.
13. All functions that lie on the critical path must take place to accomplish the basic function. All other functions on the FAST diagram are subordinate to the critical path function and may or may not have to take place to accomplish the basic functions.

10.5.3 Steps in Construction of FAST Diagrams

The following steps are recommended in the construction of the FAST diagram:

1. *Function listing.* Prepare a list of all functions, by assembly or by system, using the verb-and-noun technique of identification of function. Do this by brainstorming the questions (*a*) "What does it do?" and (*b*) "What must it do?"
2. *The function worksheet.* Using lined paper, prepare a three-column function worksheet in the format shown in Fig. 10.2. Insert the listed functions from above, one at a time, into the central column. Then, ask of each function the following questions:
   a. How do I (verb) (noun)? Record the answer(s) in the right column.
   b. Why do I (verb) (noun)? Record the answer(s) in the left column.

www.EngineeringEBooksPdf.com

Why?	Function	How?

FIGURE 10.2 Function worksheet for FAST.

3. *The diagram layout.* Next, write each function separately on a small card in verb-and-noun terminology. Select a card with the function that you consider to be the basic function. Determine the position of the next higher and lower function cards by answering the following logic questions:
   - ***a.*** Perform the "how" test by asking of any function the question, "How do I (verb) (noun)?" The function answer should lie to the immediate right. Every function that has a function to its immediate right should logically answer the "how" test. If it does not, either the function is improperly described or a function is in the wrong place.
   - ***b.*** The second test, "why," works in the same way, but in the opposite direction. Ask the question "Why do I (verb) (noun)?" The answer should be in the function to the immediate left and should read, "So that I can (verb) (noun)." The answer must make sense and be logical.

www.EngineeringEBooksPdf.com

4. *The critical path.* To determine whether a function belongs on the critical path, test the functions with these questions:
   a. How is (verb) (noun) actually accomplished, or how is it proposed to be accomplished?
   b. Why must (verb) (noun) be performed?
5. *The support logic block.* A support logic block is a block immediately underneath a given block at the same general level of activity. This contains functions that "happen at the same time as" and/or "are caused by" some other function. They can be determined by answering these questions:
   a. When is (verb) (noun) performed?
   b. If (verb) (noun) is performed, what else must also happen?
6. *Locating the scope lines.* In determining where to place the scope lines, the choice is arbitrary. Actually, moving the left scope line from left to right lowers the level of activity of the problem to be studied. The basic function to be studied shifts, since it is always the function that lies to the immediate right of the left scope line. Locating the right scope line determines the assumptions and "givens" one is willing to accept before starting the study. Location of both scope lines is also subject to the point of view of the owner or user of the problem.

   See NCHRP Synthesis 352 for an example of a FAST diagram for a highway application.

10.5.4 Diagramming Techniques

The following three considerations are general techniques that should be followed:

1. Usually only two FAST diagrams are of interest: the diagram that represents an existing plan, program, or design, and the diagram that represents the proposed concept. When diagramming something that exists, be sure not to slip off on a tangent and include alternatives and choices that are not present in the existing system.
2. When using a FAST diagram to design or propose a new concept, restrict it to a specific concept; otherwise, the answers created in diagramming become meaningless. The "method selected" to perform a function brings many other functions into existence. Therefore, creation of several FAST diagrams during system design is a possibility.
3. The choice of the level of detail of functions to be used in the FAST diagram is entirely dependent on the point of view of the diagrammer, the purpose for which it is to be used, and to whom it will be presented. For presentation of VE study results to management, a very detailed FAST diagram should be simplified.

10.5.5 Summary of FAST Diagramming

1. FAST is a structured method of function analysis that results in analyzing the basic function, establishing critical path functions and supporting functions, and identifying unnecessary functions.
2. FAST diagrams should be constructed at a level low enough to be useful, but high enough to be advantageous to the purpose of creatively seeking alternative methods.
3. FAST diagrams are used to communicate with subject matter experts; to understand the problems of specialists in their own profession; to define, simplify, and clarify problems; to bound the scope of a problem; and to show the interrelated string of functions needed to provide a product or service.

www.EngineeringEBooksPdf.com

4. The FAST procedure will be useful only if thinking outlined in the steps to prepare a diagram is performed. The value of this technique is found not in recording the obvious, but in the extension of thinking beyond usual habits as the study proceeds.
5. A FAST diagram, as first constructed, may not completely comply with "how" and "why" logic. This is because it takes additional thinking to get everything to agree. However, when you are persistent and insist that the logic be adhered to, you will discover that your understanding has expanded and your creativity has led you into avenues that would not otherwise have been pursued. When the "how" and "why" logic is not satisfied, it suggests that either a function is missing or the function under investigation is a supporting function and not on the critical path.
6. A main benefit from using FAST diagramming and performing an extensive function analysis is to correct our ignorance factor, so that we can see the study in its true light. Once this function analysis is performed on a given topic, we can quickly see that the only reason a lower-level function has to be performed is because a higher-level function caused it to come into being. Essentially, whenever we establish one of these functional relationships that is visually presented by a FAST diagram, we correct our ignorance factor and open the door to greater creativity.

10.6 COST MODEL

A *cost model* is a diagrammatic form of a cost estimate. It is used as a tool in the VE process to provide increased visibility of the cost of the various elements of a system or an item, to aid in identifying the item's subelements most suitable for cost reduction attention, and to establish cost targets for comparison of alternative approaches. It also helps define the worth of an element.

A cost model is an expression of the cost distribution associated with a specific item, product, or system. In industry, it is often referred to as a *work breakdown structure.* A cost model is developed by first identifying assembly, subassembly, and major component elements or centers of work. From this, the model can be expanded to include a parts breakdown at more minute levels, as necessary. Next, the costs are developed (actual, estimated, or budgeted) for each of the above categories. These become the cost elements of the model and can be viewed as the cost building blocks of cost buildup from successive levels.

Shown in Fig. 10.3 are five common categories of cost for a government construction program. Some additional items that should be considered, particularly for a commercial project, include cost of land, financing charges, building permits, and taxes.

10.7 WORTH MODEL

The same form of model used to distribute cost of a system can be used to allocate worth. The cost model and the *worth model* should be identical in format. The procedures to follow in creating a worth model are as follows:

1. First, the VE team determines the necessary functions to be performed by each element of work at the lowest level of activity of the cost model.
2. The worth of each of these functions is determined as explained in the job plan.

www.EngineeringEBooksPdf.com

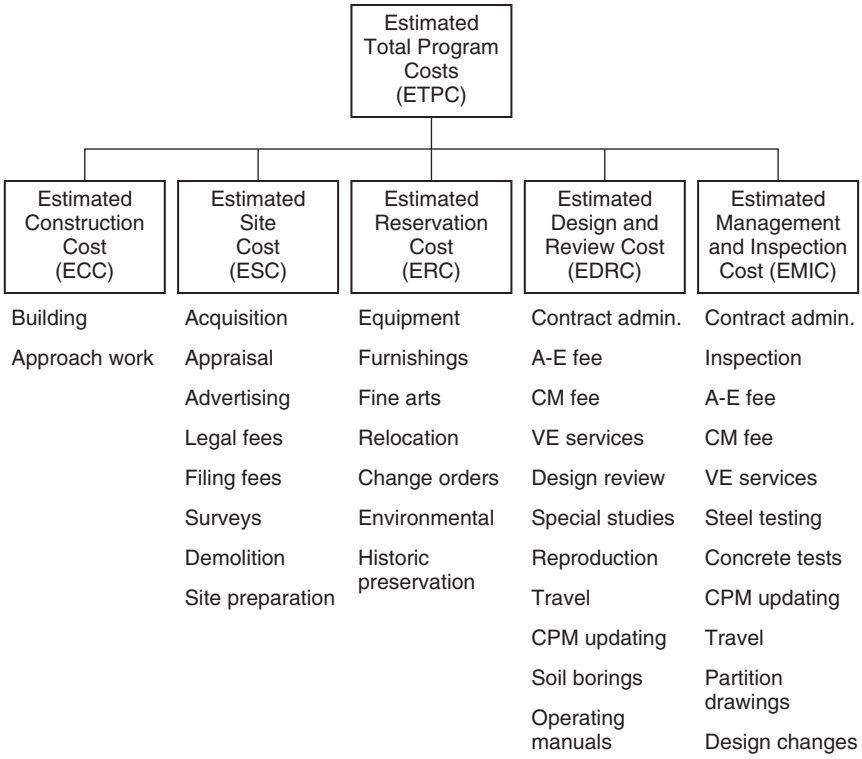

FIGURE 10.3 Cost model for construction program.

3. The worth of all functions for each cost element is totaled and becomes the worth for that element.
4. The sum of the worth of all cost elements becomes the worth of the corresponding cost element at the next higher level.

Thus, the VE team develops the minimum costs it believes are possible for each block of the cost model. The result is a cost model representing minimum costs. These costs become targets to be compared with costs as reflected by the best estimates available. Cost blocks having the greatest differences between target and estimated costs are then selected for VE study.

(H. G. Tufty, *Compendium on Value Engineering,* Indo-American Society, Bombay, 1989.)

10.8 CONSIDERATIONS IN LIFE CYCLE COST ANALYSIS

Life cycle cost (*LCC*) is the total cost of ownership of an item, computed over its useful life. To rationally compare the worth of alternative designs, or different ways to do a job (accomplish a function), an LCC analysis is made of each. For those who follow the

www.EngineeringEBooksPdf.com

VE job plan, a life cycle cost analysis is very easy to perform because the total impact of each recommended VE alternative is an integral part of the total calculations. In reality, an LCC study uses VE techniques to identify all costs related to the subject (functional) area, and VE's special contribution can be the selection of the best alternatives to be "life cycle–costed."

LCC is the development of all significant costs of acquiring, owning, and using an item, a system, or a service over a specified length of time. LCC is a method used to compare and evaluate the total costs of competing solutions to satisfy identical functions based on the anticipated life of the facility or product to be acquired. In performing a value study, an LCC analysis is performed in the development phase of the value engineering job plan to determine the least costly alternative.

The value of an item includes not only consideration of what it costs to acquire it, but also the cost to use it or the cost of performance to the buyer for as long as the item is needed. The buyer, not the seller, pays the life cycle costs and therefore must determine value. One measure of value to the buyer is the calculated total cost of ownership.

Costs of repair, operations, preventive maintenance, logistic support, utilities, depreciation, and replacement, in addition to capital cost, all reflect on the total value of a product to a consumer. Calculation of the LCC for each alternative during performance of a value study is a way to judge whether product quality is being maintained in sufficient degree to prevent degradation of reliability, performance, and maintainability.

Life cycle cost analysis requires the knowledge of several economic concepts. One of these is the concept of equivalent costs in relation to time. Equivalent costs are typically developed by equating all costs to a common time baseline using interest rates to adjust for variable expenditure years. One must also hold the economic conditions constant while the cost consequences of each alternative are being developed. That is, the same economic factors are applied to each alternative using a uniform methodology.

10.8.1 Design Life

The first task one must accomplish in performing an LCC analysis is to determine the period of time for which the analysis of accumulated costs is to occur. This will usually be designated the project design life. The life span of the facility to be analyzed (a bridge, pavement, or culvert pipe) must be determined, together with the associated maintenance and rehabilitation costs. Another consideration that must be addressed is the realization that individual life spans of components of a system may be quite different. For example, in considering a highway system, the life of a bridge will likely be much longer than the life of a pavement. In considering a building, the life of the structural framework may well be 100 years or more, whereas the life of the roof may be only 20 years.

In performing a value study, the project design life or life span that should be selected is the period of time over which the owner or user of a product or facility needs the item. The user's need determines the life span when judging LCC and worth, and when comparing alternatives. The life span should be a realistic, reasonable time, and the same life span must be used for evaluating all choices. Assessment of obsolescence is part of a rational determination of design life. One must estimate how far in the future the functional capacity will be adequate. An unrealistically long design life may result in excessive expenditures on initial costs. On the other hand, an unrealistically short design life may lead to expensive replacement at a premature date.

The salvage or residual value at the end of the project design life must be determined and accounted for in the analysis. This may represent a net scrap value or the value associated with the reuse of a component, if that is feasible.

www.EngineeringEBooksPdf.com

10.8.2 Discount Rates

The discount rate is used to convert costs occurring at different times to equivalent costs in present dollars. The selection of the discount rate to be used in the calculations is very important. If a low discount rate is selected, greater significance is given to future expenditures. If a high discount rate is selected, less significance is given to future expenditures. The discount rate should represent the rate of interest that makes the owner indifferent regarding whether to pay a sum now or at a future time. In government projects, the discount rate may be mandated by policy or law. The Office of Management and Budget prescribes rules for federal projects in Circular A-94. It states that the discount rate represents an estimate of the average rate of return on private investment, before taxes and after inflation. Thus, it may differ from the cost of borrowing. Guidelines on discount rates may be further amplified by federal agencies.

10.9 CATEGORIES OF COSTS

Costs that must be considered depend to some extent upon the system or project analyzed, but can generally be categorized as follows:

1. Initial costs
- ***a.*** *Item costs.* These are costs to produce or construct the item.
- ***b.*** *Development costs.* These are costs associated with conducting the value study, testing, building a prototype, designing, and constructing models.
- ***c.*** *Implementation costs.* These are costs expected to occur after approval of the ideas, such as redesign, tooling, inspection, testing, contract administration, training, and documentation.
- ***d.*** *Miscellaneous costs.* These costs depend on the item and include costs for owner-furnished equipment, financing, licenses and fees, and other one-time expenditures.

2. Annual recurring costs
- ***a.*** *Operation costs.* These costs include estimated annual expenditures associated with the item such as for utilities, fuel, custodial care, insurance, taxes and other fees, and labor.
- ***b.*** *Maintenance costs.* These costs include annual expenditures for scheduled upkeep and preventive maintenance to keep an item in operable condition.
- ***c.*** *Other recurring costs.* These include costs for annual use of equipment associated with an item as well as annual support costs for management overhead.

3. Nonrecurring costs
- ***a.*** *Repair and replacement costs.* These are costs estimated on the basis of predicted failure and replacement of major system components, predicted alteration costs for categories of space related to the frequency of moves, and capital improvements predicted necessary to bring systems up to current standards at given points in time. Each estimated cost is for a specific year in the future.
- ***b.*** *Salvage.* Salvage value is often referred to as *residual value.* Salvage value is not really a cost, in that this factor is entered as a negative amount in the LCC calculation to reduce the LCC amount. Salvage value represents the remaining market value or use value of an item at the end of the selected LCC life span.

www.EngineeringEBooksPdf.com

10.10 METHODS OF CALCULATION

The concepts of annualized cost and present worth are employed in LCC. Using the annualized cost method, all costs incurred are converted to equivalent annual costs using a baseline and a specified life span. For example, initial costs would be amortized over the life cycle and include principal and interest (similar to home mortgage payments). Replacement costs or rehabilitation costs at various points during the life cycle would also be converted to equivalent annual costs (sinking fund). The following steps can be employed:

1. *Annualized initial cost.* Tabulate all initial (acquisition) costs. These include the base cost of each of the alternative systems and any other initial cost. Total these initial expenditures to arrive at the total initial cost (IC). Next, amortize the initial costs (IC) by determining the annual payment necessary to pay off a loan equaling the total initial cost. Using a capital recovery table or the following equation, find the periodic payment (PP) necessary to pay off \$1.00 at a discount rate of r over a period of n years. Each total initial cost is multiplied by this factor to determine the annualized cost for this element.

$$\mathrm{PP} = \frac{r}{1 - (1 + r)^{-n}}$$

2. *Annual recurring cost.* The next step is to tabulate, for each alternative, the average annually recurring costs for operations, maintenance, and other known factors.
3. *Annualized nonrecurring cost.* Next, determine the replacement or rehabilitation costs for all major items, for each alternative, at appropriate times during the life span. Also determine the salvage value at the end of the life span. Each of the replacement costs is then discounted from the point in time where the funds are to be expended. Multiply each cost by the present worth factor (PW) from a table or calculated by the equation

$$\mathrm{PW} = (1 + r)^{-n}$$

   Then, the present worth of these replacement and salvage costs is reduced to a uniform series of payments by applying the same capital recovery periodic payment factor (PP) used in step 1. Salvage or residual values are treated similarly except that the resulting costs are negative.
4. *Total annual cost.* Finally, sum the annualized initial cost, annual recurring cost, and annualized nonrecurring cost for each alternative to determine total annual costs. These costs represent a uniform baseline of comparison for the alternatives over a projected life span at a selected interest rate. The annual differences are then determined and used for recommendations.
5. *Present worth of annual difference.* To determine the real value of an annual cost difference, calculate its present worth. Multiply each cost by the present worth annuity factor (PWA), which shows how much \$1.00 paid out periodically is worth today in real dollars. The factor may be obtained from a table or calculated by the equation

$$\mathrm{PWA} = \frac{1 - (1 + r)^{-n}}{r}$$

   Thus, one may then compare the present worth of each alternative to assess the benefit derived.

www.EngineeringEBooksPdf.com

6. *Effect of inflation.* The effect of inflation should be considered in the calculations when determining annual recurring cost, replacement cost, and salvage value, If inflation is constant at a rate *i,* costs at a future date of *y* years can be found by multiplying the cost by an inflation factor (IF) given by the equation

$$\text{IF} = (1 + i)^y$$

Thus, the calculations can be made using costs that allow for inflation. Using this procedure, different costs can be adjusted for different levels of inflation, if there is information to support such choices. More complex methods for handling inflation are also available.

If the items being compared do not involve different annual costs, it is more direct to make the present worth calculation directly. Future nonrecurring costs over the project design life can be reduced to their present worth value by multiplying by the PW factor given above, $\text{PW} = (1 + r)^{-n}$. These are added to the initial costs to determine total present worth of each system. The present worth of alternative systems can then be compared.

10.10.1 Example of Calculations

A simple example to illustrate the above calculation method is presented in Table 10.4. In this example, inflation is handled by using a net discount rate equal to the nominal discount rate (assumed as 10 percent) minus the rate of inflation (assumed as 5 percent). Two pipe materials are being considered for a drainage application where the project design life is 50 years. Initial costs associated with pipe A are $150,000, and those associated with pipe B are $180,000. Pipe A will require a $37,400 rehabilitation at the end of 40 years, and pipe B a $25,000 rehabilitation at the end of 45 years. Pipe A will have no salvage value, and pipe B will have a salvage value of $30,000. For illustrative purposes, each is assumed to have an annual maintenance cost of $1000. Calculations in part A show that for the assumed conditions, pipe A will have the lower annualized cost and the present worth of the difference in annual cost is $24,900. Calculations in part B show the same difference in present worth, since the annual recurring costs are the same in this example. (For an example of LCC in pavements, see Art. 3.11.)

Life cycle costing is a technique to assess the total cost consequences between alternatives. The potential to optimize value through LCC is only as good as the alternatives being considered. It should be used in proper sequence as part of the VE effort.

(H. G. Tufty, *Compendium on Value Engineering,* Indo-American Society, Bombay, 1989; "Value Engineering and Least Cost Analysis," *Handbook of Steel Drainage and Highway Construction Products,* AISI, Washington, D.C., 1994.)

10.11 EXAMPLES OF SUCCESSFUL VE HIGHWAY STUDIES

To recognize outstanding VE achievements and promote awareness of the importance of this program, the AASHTO Value Engineering Task Force has established national awards to be given to state transportation agencies. These awards are presented every 2 years to agencies that have shown special achievement in either cost-effectiveness or innovation.

www.EngineeringEBooksPdf.com

TABLE 10.4 Life Cycle Cost Calculations for Two Pipes

A. Annualized cost method

Type of cost	Equation for factor	Pipe A		Pipe B	
		Factor	Annualized cost, $	Factor	Annualized cost, $
Initial	PP $= r/[1-(1+r)^{-n}]$	0.0548 $n = 50$	\$150,000 × 0.0548 = \$8216	0.0548 $n = 50$	\$180,000 × 0.0548 = \$9864
Recurring	—	—	\$1000	—	1000
Non-recurring (rehab.)	PW $= (1+r)^{-n}$	0.1420 $n = 40$	\$37,400 × 0.142 × 0.0548 = 291	0.1113 $n = 45$	\$25,000 × 0.1113 × 0.0548 = \$152
Non-recurring (salvage)*	PW $= (1+r)^{-n}$	—	—	0.0872 $n = 50$	\$30,000 × 0.0872 × 0.0548 = \$143
Total	—	—	\$8507	—	\$9873

Pipe A has the lower annualized cost.

Annual difference = \$9873 − 8507 = \$1366.

Present worth of annual difference = (1/0.0548) × \$1366 = \$24,900.

*Note that salvage values are treated as negative numbers in the summations for annualized cost and present worth.

B. Direct present worth method

Type of cost	Equation for factor	Pipe A		Pipe B	
		Factor	Present worth, $	Factor	Present worth, $
Initial	—	—	\$150,000	—	\$180,000
Non-recurring (rehab.)	PW $= (1+r)^{-n}$	0.1420 $n = 40$	\$37,400 × 0.142 = \$5311	0.1113 $n = 45$	\$25,000 × 0.1113 = \$2782
Non-recurring (salvage)*	PW $= (1+r)^{-n}$	—	—	0.0872 $n = 50$	\$30,000 × 0.0872 = \$2616
Total	—	—	\$155,311	—	\$180,166

Pipe A has the lower cost based on present worth.

Difference in present worth = \$180,166 − 155,311 = \$24,900 (same result as in part A).

*Note that salvage values are treated as negative numbers in the summations for annualized cost and present worth.

www.EngineeringEBooksPdf.com

The VE Task Force presents the awards in the categories of (1) process improvement, (2) project delivery, and (3) preconstruction engineering (design, utilities, right-of-way, and construction). The awards for 2007 for the most value added proposals are summarized below.

Category: Improved Process
Agency: California Department of Transportation (Caltrans)
Project: Antioch and Dumbarton bridges Geotechnical Investigation Requirements to Develop Retrofit Strategy
Citation:

> This unique study analyzed the geotechnical investigation requirements necessary to develop the strategy that leads to retrofit recommendations for the Antioch and Dumbarton bridges. Caltrans will use this study to develop an appropriate retrofit strategy for each bridge. The baseline scope placed heavy emphasis on conducting new explorations and associated laboratory testing to obtain more dependable data (baseline estimate of $12,100,000). The value analysis (VA) team concluded that the objectives of the investigation could be achieved with fewer new exploratory borings drilled to somewhat shallower depths. Other recommended alternatives also improved the project and lowered cost, with implemented savings of $2,350,000 or 19 percent. All recommended alternatives were accepted and implemented.

Category: Project Delivery
Agency: Minnesota Department of Transportation
Project: TH 212 Design-Build Project, State Project No. SP 1017 12
Citation:

> The TH 212 Design-Build Project is a $238 million construction project consisting of 11.75 miles of new four-lane divided highway realignment, 7 interchanges, 28 bridges, and numerous retaining and noise walls. The VE proposal is to eliminate a bridge and provide for the realignment of a crossing road to intersect where the main line creek crossing occurs. This combined crossing concentrates impacts and construction activities in one location. This change minimizes environmental impacts to the creek, the big woods remnant vegetation, and the flood plains, and reduces slope stability issues. The VE impacts include savings in project costs, and reduced construction impacts and future maintenance activities. The new design eliminates an insufficient horizontal curve design exception, improves sight distance at an intersection, reduces the total acreage disturbed, and creates less impervious area.

Category: Preconstruction Engineering < $25 Million
Agency: Florida Department of Transportation
Project: Protection of US 98 on Okaloosa Island
Citation:

> US 98 on Okaloosa Island has been damaged by storm surges from at least five tropical events in the last ten years, resulting in more than $16 million in repair work. The purpose of this project was to provide additional protective features to reduce the potential for future damage from similar storm events. The District wanted the additional protection in place prior to the next storm season, which required the project to be designed and constructed in less than one year. The recommendation developed by the team and accepted by management reduced the cost of the $20.6 million project by $8.3 million, or 40 percent, and also reduced the construction time by 50 percent. A key product innovation from the VE team was the recommendation to use Teflon sheet piling to replace conventional concrete sheet piling.

www.EngineeringEBooksPdf.com

Category: Preconstruction Engineering $25–$75 Million
Agency: Transport Canada, Ontario Ministry of Transportation, and the City of Windsor
Project: Let's Get Windsor Essex Moving, Walker Road and Howard Avenue Grade Separations VE and Risk Study
Citation:

Security measures at the U.S. border have caused significant traffic problems in the City of Windsor. One of the problems was the need to x-ray rail cars entering the United States, which reduced train speed and increased traffic delays at major arterial road-rail crossings in the city. An immediate and concerted effort was put into place to grade separate two major urban road crossings. The original project cost estimates increased dramatically due to the rushed design, limited property, business and industrial activities, traffic operations, and a myriad of major utility issues. A VE study and Cost Risk analysis improved communication with the city, Transport Canada, Ontario Ministry of Transportation, and designers; saved $2 million; identified risks; brought certainty to the cost estimates; and clarified project scope.

Category: Preconstruction Engineering >$75 Million
Agency: New Jersey Department of Transportation
Project: Route 52 Causeway Replacement Contract A
Citation:

The Route 52 Causeway Replacement Contract A project involves the replacement of 1.2 miles of existing Route 52 Causeway, including 2 structures displaying structural, geometric, and safety deficiencies. Bids far exceeded original estimates. The VE repackaging of Contract A converted Rainbow Island from bridge structure to roadway by grade touchdown utilizing fill. Additionally, the VE changes introduced conventional fixed bridges as an alternate design to high-level bascule bridges. VE design and bridge changes reflected through this repackaging effort resulted in a low bid of $141,350,400, with a net savings of $88,636,000, and improved constructibility by acquiring environmental permits that allowed timely construction without seasonal delays.

Category: Preconstruction Engineering >$75 Million—Honorable Mention
Agency: Central Puget Sound Regional Transit Authority (Sound Transit)
Project: 755 Segment of Sound Transit Central Link Light Rail Project
Citation:

The 755 Segment of Sound Transit Central Link Light Rail Project extends approximately 5 miles, from the Boeing Access Road to a station at Southcenter Boulevard. This LRT guideway is mostly elevated and parallels or crosses over Washington State Department of Transportation (WSDOT) freeways along much of its route. The design team undertook an intensive value engineering study of the 30 percent preliminary design at the beginning of the final design assignment. The VE study identified significant configuration changes that were forecast to save $23 million and approximately 8 months of construction duration. Sound Transit evaluated and accepted the recommendations for incorporation into the final design. The potential savings and other benefits identified in the value engineering work were validated by the bids received and continue to be realized during construction of the $234 million project.

www.EngineeringEBooksPdf.com

www.EngineeringEBooksPdf.com

INDEX

www.EngineeringEBooksPdf.com

Access control:
defined, 184
geometric design, by, 184
statute, by, 2, 184
zoning, by, 184
Acoustical concepts, 776–777
Acoustical design, 777–778
Acoustical standards, 777–778
Air quality:
ambient air quality standards, 23
Clean Air Act (CAA), 23–26, 42
emission standards, 23–26
Asphalt concrete (*see* Pavement, flexible)

Barriers, end treatments for:
backslope anchorage, 524
Beam-Eating (BEST), 523, 525
concrete, sloped, 523, 525–526
eccentric loader (ELT), 523–524
Extruder, 523, 525
Flared Energy-Absorbing (FLEAT), 523, 525
Narrow Energy-Absorbing (NEAT), 523, 525
QuadTrend-350, 523, 525
Regent, 523, 524
Sequential Kinking (SKT-350), 523, 525
three-cable, 523
Vermont low-speed, 523, 524
Wyoming Box Beam, 523, 524
(*See also* Crash cushions)
Barriers, median:
characteristics of, 506, 507–512
classification of, 507, 509
deflection of, 507, 509, 510–519
placement of, 506, 515–517, 520
Barriers, median (*Cont.*):
selection of, 507
transitions, 514
types of:
box beam, 509, 512
concrete, single-slope, 509, 510–512, 518
concrete, vertical wall, 509, 510–512
concrete safety shape,510–512, 515–518
movable concrete barrier, 509, 512, 519
three-cable, 507, 509, 510
thrie-beam, strong-post, 509, 510, 514
W-beam, strong-post, 509, 510, 513
W-beam, weak-post, 509, 511
warrants for, 506
Barriers, roadside:
characteristics of, 491
classification of, 491, 493
deflection of, 491, 503, 542
placement of:
area of concern, lateral extent of, 504–505
clear zone, relation to, 505
considerations, 502
flare rate, 503–504
lateral offset, 502–503
layout, 504–506
length of need, 504–506
runout length, 504–505

www.EngineeringEBooksPdf.com

shy line offset, 502–503
slopes, on, 515–516
terrain effects, 503
selection of, 499–501, 502

www.EngineeringEBooksPdf.com

Barriers, roadside (*Cont.*):
types of:
box beam, weak-post, 493, 496
concrete safety shape, 493, 498–499, 501
flexible, 492–495
rigid, 493, 498–499
semirigid, 493, 496–498
three-cable, 492–493, 494
thrie-beam, blocked-out, strong post, 493, 496, 498
thrie-beam, modified, 493, 496–497, 499
timber-rail, steel-backed, 493, 498, 500
wall, stone masonry, 493, 499, 501
W-beam, blocked-out, strong-post, 493, 496, 497
W-beam, weak-post, 493, 496, 498
upgrading of, 506, 507
warrants for:
considerations, 488–490, 492
defined, 489
embankments, 489–490
obstacles, 490, 492
Bikeways, 67, 69, 162
Bridges:
aesthetics of, 313, 321, 335, 338, 341, 344, 351
bearings for:
disk, 353
elastomeric, 342, 349, 352–353
pin, 349, 351, 352
pot, 353–354
requirements, 348–349
rocker and bolster, 350–351
roller, 352
sliding plate, 349–350, 351, 352
types of, 349
clearances for, 315–316
corrosion protection systems for:
coating, fusion bonded, 326, 329
galvanizing, 321, 323, 326, 329, 351
metallizing, 329, 351
paint, 328–329, 330, 335, 342, 346–347
selection of, 328–329
cost of, 326, 341–344
decks for:
cast-in-place concrete, 321, 324
construction of, 318, 321–323, 324–325
design of, 323–324
drainage of, 347–348
precast concrete, 321–322, 324–325
prestressed concrete, 321–322, 324–325
protection of, 325–327
repair of, 327
Bridges, decks for (*Cont.*):
steel, corrugated, 323, 324
steel, grid type, 322
steel, orthotropic, 323
timber, 316, 321
design of:
alternative bids in, 328, 329, 336
beam and girder spacing in, 342, 343
consultants for, 311–312
contracts for, 312
economics in, 341–344, 345
specifications for, 313–314, 315, 320, 323, 346
drainage for (*see* Safety, roadside)
geometrics of, 314–316
inspection of, 346, 347, 354

www.EngineeringEBooksPdf.com

joints in:
deflection type, 330–331
expansion type, 331–335
seals for, 332–335
materials for:
aluminum, 320
concrete, 316–318, 321–322, 325–328
elastomers, 332, 333–334, 342, 349, 352–354
rubber, 320–321, 325, 352
selection of, 327–328, 336–344
steel, 318–320, 327–328
steel, weathering, 319, 328, 329–330, 342, 348
stone, 321
timber, 316, 321
paint removal on, 346–347
(*See also* Lead-based paint)
piers for, 313, 315, 321, 354–355
railing retrofits for:
concrete, 519, 521
concrete safety shape, 521
post-and-beam, metal, 521
thrie-beam, 521
W-beam, 521
railings for:
aluminum, 320
clearance, 314–315
crash testing of, 521–522
design of, 517, 521–522
function of, 517
placement of, 518–519
selection of, 518
transitions to, 522
railroad crossing, 315–316
rehabilitation of, 321–322, 344–346

www.EngineeringEBooksPdf.com

Bridges (*Cont.*):
repainting, 346–347
(*See also* Lead-based paint)
replacement of, 410, 411, 447–448, 459–461
scour problems for, 354–356
seismic design of, 356–357
seismic retrofit of, 356–358
span lengths for, 336, 344, 345
span types for:
continuous, 313, 335–336, 344
simple, 335–336
superstructure of, 327–328
types of:
composite, 336, 341–342
jointless, 331, 335
prestressed concrete box-beam, 337–338
prestressed concrete I-beam, 338–339
reinforced concrete flat-slab, 336–337
steel arch, 336
steel beam, 339–340
steel box girder, 343–344
steel cable-stayed, 336
steel plate girder, 340-343
steel suspension, 336
steel truss, 320, 336, 346
widening of, 344, 346

Collector-distributor roads:
design, 137
function, 164, 173
separation distance, 173
terminals, 171, 175, 176–178
(*See also* Service roads)
Concrete:
admixtures, 316, 317, 321, 322, 325, 326
air entrainment for, 317
alkali-silica reaction in, 316
bridge barriers, 330–331
(*See also* Bridges, railings for)
bridge decks:
design of, 323–324
cast-in-place, 321, 324
construction of, 324–325
forms for, 321, 323, 324–325
grid, filled, 322
joints in, 330–335
overlays for, 316, 317, 321, 327, 332, 338
precast, 321–322, 324–325
prestressed, 321–322, 324–325
Concrete, bridge decks (*Cont.*):
protection of, 325–327
(*See also* Bridges)
bridge parapets, 330–331
(*See also* Bridges, railings for)
bridges:
advantages of, 328
types of, 336–339
(*See also* Bridges)
cracking in, 316–317, 322, 324, 330–331, 338
dense, 317, 318, 327
durability of, 316–318, 321, 322
flexural strength, 264–265
fly ash in, 55, 58–59, 61

www.EngineeringEBooksPdf.com

freeze-thaw of, 316, 318
high performance, 317–318, 321, 325
latex-modified, 317, 327
lightweight, 318
modulus of elasticity, 264
modulus of rupture, 264–265
permeability in, 316, 317, 318, 321, 325
reinforcement for:
cathodic protection of, 321, 325, 326–327
corrosion of, 321, 322, 324, 325–327
design of, 323–324
epoxy-coated, 321, 326
galvanized, 321, 326
sealers for, 316, 325
shrinkage in, 316–317, 318, 330–331
silica fume, 54, 317, 321, 327
spalling of, 324, 325, 332
waterproofing membranes for, 321, 325–326, 327, 338
Construction plans:
CADD systems:
layers, 213
levels, 213
overview, 210–213
components:
calculations, 217
cross sections, 213, 217, 220
details, 217
drainage, 217
notes, 213
plans, 213–217
profiles, 217, 219
schematic plan, 213, 215
sections, 213, 216, 217, 220
special sheets, 217
storm water plan, 217
summary, 213, 217, 218

www.EngineeringEBooksPdf.com

Construction plans, components (*Cont.*):
title sheet, 213, 214
traffic maintenance, 213
preparation:
purpose, 209
tracing material, 210
Consultants:
responsibilities of, 312
use of, 311–312
Council on Environmental Quality, 3, 5
Crash cushions:
characteristics of, 526–529, 532
maintenance of, 530–531, 532
placement of, 532
selection of, 532
types of, 526–529, 532
(*See also* Barriers, end treatments for)
Cross section design:
bridges, at, 137, 138–139
curbs:
guiderails, relation to, 145
justification for, 142
position, 142, 145
ramps, 146
transitions, 145
types, 142
(*See also* grading, curbs, *below*)
grading:
barrier, 127
barriers, earth, 131, 133
benches, 128, 130–133
channels, parallel, 130–131, 133
clear zone, 120, 121, 123–126, 128, 131, 133, 134, 138, 139
crossroads, 128, 132
curbs, 128, 134
diamond interiors, 133, 136–137
ditches, traversable, 125, 126, 131
driveways, 128, 134
gore area, 133
interchanges, 132, 135, 136, 137, 140
loop interiors, 136
median, special, 127, 133
ramp, 132
safety, 124, 129, 130
slope rounding, 120, 126, 127
slopes, 122–137
standard, 126, 132
trumpet interiors, 133, 135
(*See also* Safety, roadside)
lanes, number of, 117
lanes, width of, 118, 119–122
Cross section design (*Cont.*):
medians:
function of, 137
types, 137, 140–142
U-turns through, 142–143
width, 137, 140
pedestrian facilities:
border, 146
bridges, on, 146
bridges, under, 146
curb ramps, 146
disabled access, 146
tree lawn, 146, 147
walks, 145, 146, 147

www.EngineeringEBooksPdf.com

roadways:
crowns, 118
horizontal curves, 118, 123, 124
lane shifting rate, 118
lane transitions, 118
lane widths, 118, 119–122
pavement cross slopes, 118
shoulder grade breaks, 122, 126–128
shoulder width, 119–122, 125
shoulders, 119, 122
service, level of, 117
Cultural resources (*see* Historic resources)
Culverts:
classification of, 418
construction methods for:
camber, 462, 463
directional drilling, 464
embankment installations, 462
jacking, 462–463
microtunneling, 464
soil stabilization, 464
trench installations, 462
tunneling, 462–463, 464
(*See also* installation of, *below*)
flexible, structural design of:
area of cross section, 440, 449
backfill requirements, 461–462
bedding requirements, 461–462
boxes, 447–448
considerations in, 438, 439, 441
deflection, 453, 455–456, 457
examples of, 442–446, 454–455
flexibility factors, 443
installation requirements, 461–464
load factor design for, 445–446
long-span structures, 447–448
mechanical properties, 442–443, 449–450
modulus of soil reaction, 456, 457

www.EngineeringEBooksPdf.com

Culverts, flexible, structural design of (*Cont.*):
moment of inertia, 440, 449
pipe arches, 446–447
pressure distribution, 446–447
ribs and lagging, 456, 458–459
seam strength, 441–443
service load design for, 442–445
soil modulus, 451
tunnel liners, 456, 458–459
hydraulic design of:
considerations in, 388–391
critical depth in, 397–398, 400
(*See also* Open channels, flow in)
discharge velocity in, 400–403
energy dissipation in, 400–403
entrance loss coefficients for, 389, 391–394
entrance transitions in, 389–390
inlet control in, 389–394
long-span structures, 399–400
outlet control in, 391-393, 395–397
size determination in, 395–397
submerged outlets in, 397
inspection of:
considerations in, 464–466
elements included in, 466–467
flexible pipe, 467–468
National Bridge Inspection Program, 465, 466
piping, 465, 466, 467, 468
rigid pipe, 468–469
installation of:
backfill, 418–420, 461–462
bedding, 418–420, 461–462
flexible pipe, 418–420, 461–462
rigid pipe, 418–420, 461–462
(*See also* construction methods for, *above*)
loads on:
dead, 418–420
earth, 418–424, 442, 450–452
impact, 423–424, 441
live, 418–419, 423–424, 426–427, 431–432, 441, 450
prism, 422–423
rehabilitation of:
considerations in, 470
flexible pipe, 470–472
relining, 472
rigid pipe, 470, 472
shotcrete lining, 472
Culverts (*Cont.*):
rigid, structural design of:
backfill requirements, 418–420
bedding requirements, 418–420
boxes, 437–438
cast-in-place pipe, 438, 439
considerations, 424–437
direct design for, 424–426, 433–437
D-load design for (*see* indirect design for, *below*)
example of, 430, 433
indirect design for, 424–425, 430–433
installation requirements, 418–420, 425–426
pressure distributions, 427–428, 438–439
SIDD model for, 425–426, 427–430, 431, 437
three-edge bearing test for, 422–423, 430, 431, 432
three-sided, 437–438
selection guidelines for:
abrasion, 414–415

www.EngineeringEBooksPdf.com

aluminum pipe, 417
concrete pipe, 415
plastic pipe, 417
protective coatings, 417
steel pipe, 415–418
service life of:
abrasion effects in, 414–415
design value for, 413, 417
environmental effects in, 413–414
(*See also* inspection of, *above*)
types of:
aluminum, 407, 410
box, 404–405, 410
cast-in-place, 403–404
concrete, 403–406
concrete, factory-made, 403, 405
corrugated metal, 406–410
long-span structures, 410, 411
pipe-arches, 407, 410
plastic, 412
polyethylene, 412
polyvinyl chloride, 412
spiral rib, 407–408, 410
steel, 406–411
structural plate, 410
three-sided, 404–405
tunnel liners, 410–411
(*See also* Safety, roadside, drainage systems; Storm water systems)

www.EngineeringEBooksPdf.com

Drainage, roadway, design of:
considerations in, 379–381
culverts, 385–386
(*See also* storm drains, *below*;
Culverts;
Storm water systems)
curbs and gutters, 381–385
design spread, 380–381
design storm, 380–381
guidelines, 379–381
inlets, 381–385
slotted drains, 383–385
storm drains, 385–386
(*See also* Culverts;
Storm water systems)
subgrade drains, 386, 387–388
subsurface drains, 386–387
underdrains, 386, 387
Driveways:
commercial, 188, 191, 192
industrial, 191, 192, 193
location of, 183, 184
profiles for, 187, 192, 193, 194–195
rural, 184, 185
service station, 184–188, 189–191
shopping center, 191, 192, 193
urban, 184, 185, 186, 187

Embankment slopes, safety considerations for (*see* Safety, roadside)
Endangered species, 2, 6, 13, 14, 24, 28, 34–35
(*See also* Land use)
Environmental impact:
air quality, 2, 6, 13, 23–26
context sensitive design, 5, 13
cumulative effects, 19, 40
erosion, 31–33
floodplains, 13, 23, 25, 34
hazardous waste, 13, 35–39, 40, 43
historic sites, 3–4, 13, 15, 24, 25, 38–39
mitigation measures, 6, 10, 12, 15, 18–21, 38, 61
noise, 2, 6, 8–9, 13, 24, 26
Environmental impact statement (*see* National Environmental Policy Act)
Environmental issues, 1–66
Environmental Protection Agency, 3, 24 28

Fatalities:
rate, 473–474
roadside:
caused by fixed objects, 474, 483, 488, 490
caused by supports, 483, 488
Fatalities, roadside (*Cont.*):
causes of, 473–475
reduction in, 473–475
Floodplains:
environmental impact on, 13, 23, 34
environmental regulations, 23, 25, 34
only-practical-alternative finding for, 34
(*See also* Land use)

www.EngineeringEBooksPdf.com

Forgiving roadside concept, 474

Geometric design:
alignment, horizontal:
considerations, 78, 85–87, 109–110
curves, 85–88
deflection angle, 85–86
function of, 85
vertical alignment, coordination with, 115, 117
alignment, vertical:
considerations, 78, 110–113
curves, 112–115
grade, critical length of, 110, 111, 112
grade, maximum, 110, 111
grade, minimum, 110
grade, tangent, 110, 111
grade breaks, 112–113
horizontal alignment, coordination with, 115, 117
stopping distance, 110–115
controls for:
categories, 76
design features, 77
exceptions, 78
functional classification, 76, 78
relationships, 78
speed, 78
terrain classification, 77
traffic data, 76–77
traffic numbers, 77
sight distance, decision:
defined, 84
examples of, 84
required, 86
traffic controls, 85
sight distance, intersection, 81, 82, 83–84
sight distance, passing, 81, 82, 84
sight distance, stopping, 79–81
superelevation:
centrifugal force, 87–88, 101
climate, effect of, 87
curvature, maximum, 87–88, 101
defined, 87

www.EngineeringEBooksPdf.com

Geometric design, superelevation (*Cont.*):
design factors, 87
determination methods, 88–89
elevations, 106
equation, 87
friction, effects of, 87–89, 101
friction factors, 87–88
grade, effect of, 101
horizontal curves, between, 106, 108–109
low-speed roadways, for, 101, 102, 106
position, 105, 106
profiles, 106
radius, horizontal, minimum, 87, 89–101
rates, 87–101
runoff, 101–109
selection factors, 87
spiral, Euler, 109
spirals, on, 105, 106, 109
tangent runout, 101, 105–106
terrain, effect of, 87
transition, 101, 106
Geotechnical (*see* Retaining walls, foundations;
Rock;
Soil)

Hazardous waste:
environmental control legislation for:
Comprehensive Environmental Response, Compensation and Liability Act (CERCLA), 24, 36–37, 41
Intermodal Surface Transportation Efficiency Act, 3, 4, 55
Resource Conservation and Recovery Act (RCRA), 24, 36, 40–41, 54–55, 61, 64, 66
Superfund Amendments and Reauthorization Act (SARA), 24, 36–37, 41
Toxic Substances Control Act (TSCA), 24, 36
environmental impact of, 35–36, 40, 41, 43, 46, 48, 51, 52
(*See also* National Environmental Policy Act)
paint, from (*see* Lead-based paint)
recycling of, 52–66
(*See also* Waste materials)
High-occupancy vehicle lanes:
arterial streets, on:
categories, 202–203
center lane, in, 202–203, 210, 211
concurrent flow, 200, 202–203, 207–208, 212
contraflow, 200, 202–203, 209, 212
traffic control, 200–203
High-occupancy vehicle lanes (*Cont.*):
concept, 199
freeways, on:
concurrent flow, 200, 202
connections, 200, 204–205
contraflow, 200, 202
cross sections, 200–202, 203, 207–210
signing, 200, 206
speed, 199, 200
width, 200, 201–202
goals, 199
implementation guidelines, 199–200
operations, 200
passenger loads, 200
planning, 199–200
Historic resources:
environmental evaluation of, 38–39
environmental impact on, 2–6, 13–15, 19, 24–25, 38–39
environmental legislation to protect:

www.EngineeringEBooksPdf.com

American Indian Religious Freedom Act, 24, 38
Archeological and Historical Preservation Act, 24, 38
Archeological Resources Act, 24, 38
Historic Sites and Buildings Act, 24
National Historical Preservation Act, 4, 24, 38–39
National Register of Historical Places, 14
Native American Graves Act, 38
Protection and Enhancement of the Cultural Environment, 25
(*See also* National Environmental Policy Act)
Hydrology:
computer models, 369
defined, 359
design storm, 361, 363
flood frequency, 361, 362
runoff estimation:
example of, 369–370
intensity-duration-frequency curve for, 363
peak flow equations for, 362–363
rational method for, 362–363
runoff coefficients for, 363–365
statistical methods for, 361–362
time of concentration, estimation of:
example of, 369–370
kinematic wave equation for, 365–366
Kirpich equation for, 367–368
National Resource Conservation Service (NCRS) method for, 369

www.EngineeringEBooksPdf.com

Hydrology, time of concentration, estimation of (*Cont.*):
overland flow in, 363–367
Williams equation for, 368–369
watershed characteristics:
features and orientation, 360
topographic divide, 360
water, storage of, 360

Intelligent vehicle highway systems:
commercial vehicles, 197, 198
defined, 197
electronic payment, 197, 198
emergency management, 197, 198
goals, 197
safety systems, 197–198
traffic management, 197–198
transportation management, 197–198
user services, 197–198
Interchanges:
defined, 163
ramps:
classification of, 166–171
grade intersections, 173, 174
speed, 164, 166
superelevation, 172–173
terminals, 166–173
vertical curvature, 173
spacing, 163
types of, 164
Intermodal Surface Transportation Efficiency Act (ISTEA), 4, 6, 55
Intersections:
design considerations, 147–164
drainage, 155
horizontal alignment, 149, 150
islands, 155–156
lanes at:
bicycle, 162
left turn, 156–159
left turn, two-way, 163
right turn, 157, 159–160
taper of, 156, 157
through, 160
lighting, 162
pedestrians, 160
radius, 152–155
recovery area, 160
roadway, major, 149
roadway, minor, 149
sight distance, 82, 149
traffic control, 148–149
traffic volume, 148
Intersections (*Cont.*):
turning templates, 153–155
types of, 148
vehicle types, 148
vertical alignment, 149, 151–152
(*See also* Geometric design)

Land use:
environmental evaluation of, 2, 3, 6, 11, 13, 26, 35, 37
recreation, for, 2, 3, 6, 15, 37–38

www.EngineeringEBooksPdf.com

special, environmental legislation governing:
Department of Transportation Act, 1, 3–4, 24
Executive Orders, 3, 23, 25
Farmland Protection Policy Act (FPPA), 24, 37
Federal Coastal Zone Management Act, 24, 37
Federal Endangered Species Act, 6, 14, 24, 34–35
Federal Wild and Scenic Rivers Act, 24, 37
Fish and Wildlife Coordination Act, 24, 37–38
Floodplain Management, 25, 34
Protection of Wetlands, 23, 25, 33
Rivers and Harbors Act, 24, 35
Lead-based paint:
biohazards, 40, 41
debris from, recovery of, 41, 42, 49, 50, 52
environmental regulations on, 40–42
overcoating of, 43
removal of:
blast cleaning, 40–51, 56
chemical, 45, 47, 48
community relations on, 50
containment for, 48–53
hand tool, 44, 47
monitoring, 43, 49–52
power tool, 44–45, 47
project management for, 52
protection during, 41–42
specifications for, 51, 53
sponge jet, 45, 47
water jet, 44, 46–47
repainting, 43
toxicity testing, 40–41
use of, 39–40
Life cycle cost (LCC) analysis (*see* Value engineering)
Lighting:
benefits, 615–616, 623
bridges, 623

www.EngineeringEBooksPdf.com

Lighting (*Cont.*):
classifications:
area, 619
roadway, 618–619
walkway, 619
design values:
bridges, 623
freeways, 622, 623–624
highways, 623–624
overpasses, 623
special cases, 624
streets, 624
transitions, 623
illuminance, 616, 624
luminance, 616, 624
rest areas, 626–627
transition, 623
tunnels, 624–626
visibility, 616–617, 624, 626, 635
warrants for:
analytical method, 628–637
conditions, 620–622, 623–624
freeways, 620–622
highways, 623–624
interchanges, complete, 620
interchanges, partial, 621
special cases, 622
streets, 626
tunnels, 624
(*See also* Luminaires;
Poles, luminaire)
Luminaire supports (*see* Supports)
Luminaires:
cobra head, 628, 635, 638
connectors, 641, 644, 647, 651
construction of:
barriers, on, 649–651, 654
bridges, on, 649–651
conduits, 649–651
fuses, 641, 644, 652, 653
high mast:
advantages, 635–636, 654
connection, power, 651
design, 635–636, 637
lowering devices, 627, 628, 633, 651
offset, 629, 633
wattage, 618, 626, 628
location, 628, 635–636
maintenance, 652
reflectors, segmented, 633, 635
tests, acceptance, 651–652
voltage, 640, 652
wiring, 640–645
(*See also* Lighting;
Poles, luminaire)

National Environmental Policy Act (NEPA):
categorical exclusion, 6–10
decision, record of, 7, 15, 22
emergency actions, 8
environmental assessment:
contents, 10–11
Council on Environmental Quality, role of, 3, 5, 9, 12, 18, 19, 20

www.EngineeringEBooksPdf.com

format, 10–11
impacts, 12–14
intensity, 12–13
mitigation measures, 12–14
project description, 11–12
purpose, 11
environmental impact statement, draft:
affected environment, 19
alternatives, 18, 19
consequences, 19
cover sheet, 18
format, 17–20
index, 20
mitigation measures, 19–20
need, 18
preparers, 20
purpose, 18
summary, 18
environmental impact statement, final, 7, 20–21
environmental impact statement, supplemental, 22
environmental reevaluation, 22
exempt actions, 4, 6, 7, 9–10
exemptions, express statutory, 8
impact, no significant, finding of, 7, 10, 15
intent, notice of, 7, 14, 15–16
overview, 5–6
process steps, 5–23
public involvement, 7, 10–21
review, 6–11, 14–17, 20
scoping, 7, 10, 15–19
supporting documents, 20
National Highway System Designation Act, 5
National Pollutant Discharge Elimination System (NPDES), 27–28, 31–33
National Priorities List (NPL), 36
Natural resources (*see* Land use)
Noise:
diffracted, 776–777
environmental impact of, 2, 6, 8, 13, 23–24, 26
Noise Control Act (NCA), 26
reflected, 776, 777

www.EngineeringEBooksPdf.com

Noise (*Cont.*):
source, 776, 780
transmitted, 776, 777
(*See also* Noise barriers)
Noise barriers:
aesthetics, 779, 780–783
construction of, 792–795
contracts for, 792–795
cost benefits for, 779–780
cost factors for, 780
design criteria for, 790
design of:
acoustical, 777–778
examples of, 781–783, 791–792
foundation, 791–792
general, 785–787
structural, 787–790
graffiti on, 781, 785
height of, 776–777, 780–782
landscaping for, 780–781, 786
loadings:
combinations of, 790
seismic, 790
wind, 787–790
maintenance of, 779, 780, 784–785
materials for:
brick, 778
concrete, 778, 781–783, 784
criteria for, 780
earth berm, 778, 779, 784
masonry, 778, 782, 785
measurement of, 795
payment for, 795
project development for, 785–787
safety considerations for, 784
selection of, 778–780
site, 780, 793
steel, 779
termination of, 781, 784
wood, 778, 779, 782, 783, 784, 792–795
Noise walls (*see* Noise barriers)

Open channels:
design of:
channel protection in, 372–373
considerations in, 371–372
realignment in, 372
shore protection in, 372–373
velocity in, recommended, 371–372
flow in:
continuity equation for, 374
control points, 378
critical depth of, 376–379
Open channels, flow in (*Cont.*):
critical slope of, 376–377
critical velocity of, 376–379
energy equation for, 374, 375, 376–377
Froude number for, 379
hydraulic grade line for, 374, 375, 376–377
Manning's equation for, 374, 375, 376
roughness coefficients for, 374, 376
steady, 373
types of, 373

www.EngineeringEBooksPdf.com

uniform, 373
unsteady, 373
(*See also* Culverts, hydraulic design of)

Pavement:
asphalt concrete (*see* flexible, *below*)
composite:
composition of, 233
coring of, 289–290, 291
design of, 233
distress in, 288, 301
elastic layer theory for, 233
joints in, 234, 294
reflective cracking in, 233
coring, 289–291
design of:
basis for, 223
California bearing ratio, 249, 292, 293
drainage coefficient, 265
equivalency factor, 236–254
lane distribution factor, 237
material properties in, 264–265
modulus of subgrade reaction, 226–227, 258–264
present serviceability index, 235–236
present serviceability rating, 235–236
procedures for, 257–270
reliability, 240, 243
resilient modulus, 246, 249, 252, 255, 257, 258, 266, 269, 272
safety factor, 240, 243
serviceability, 235–236
serviceability loss, 265, 266
serviceability, terminal, 236, 265
single-axle loading, equivalent, 236, 237, 240, 255, 256, 265, 266
standard deviation, 240–243
structural number, 236, 270
traffic, design, 236, 237, 240
traffic loading, 236, 237, 240
Unified Soil Classification in, 252, 255

www.EngineeringEBooksPdf.com

Pavement (*Cont.*):
deterioration of:
classification of, 270
environmental, 270
functional, 270
measurement methods for, 273
structural, 270
(*See also* distress in continuously reinforced concrete, *below*;
distress in flexible, below;
distress in rigid, *below*)
distress in continuously reinforced concrete:
punchouts, 282, 283
settlement, 280
transverse cracking, 281, 283
(*See also* distress in rigid, *below*)
distress in flexible:
bleeding, 283, 284
corrugations, 284, 285
cracking, block, 285, 287
cracking, edge, 288
cracking, longitudinal, 284, 286
cracking, transverse, 284, 285, 286
cracking, wheel track, 286, 287
investigative methods for, 288–296, 297–298
potholes, 284
raveling, 282, 283
rutting, 284, 285
distress in rigid:
corner breaks, 276, 280, 281
cracking, longitudinal, 280
cracking, transverse, 279, 280
faulting, 225, 226, 276, 278
investigative methods for, 288–296, 297–298
joint spalling, 224, 230, 278–279, 281
popouts, 276, 277
pumping, 263, 276
settlements, 278
surface deterioration, 274, 277
flexible:
composition of, 232
coring of, 289, 291
design procedure for, 266–270
material for, 270
reclaimed, 56, 65
recycled materials in, 62, 65
scrap tires in, 55, 62, 65
structural number for, 270
thickness of, 270, 276
types of, 232–233
(*See also* distress in flexible, *above*;
rehabilitation of flexible, *below*)
Pavement (*Cont.*):
jointed rigid:
blowups of, 224
contraction joints in, 224–225, 227, 230–231
cracking of, 224–227
design relationships for, 226–227
details, 227, 228–229
doweled joints in, 224–226
expansion joints in, 224
jointing layouts, 228–229
intersections in, 228–229
modulus of subgrade reaction, 227, 258–264
pressure spalling of, 224
radius of relative stiffness, 226–227

www.EngineeringEBooksPdf.com

reinforcement in, 224–226
saw cuts in, 224–225, 227
undowelled joints in, 224
Westergaard theory for, 226–227
(*See also* design of, *above*;
rigid, *below*;
rigid, joint seals in, *below*)
life cycle cost analysis of, 306–309
(*See also* Value engineering, life cycle cost analysis in)
management of, 270–273
overlay of:
rehabilitation, 280, 298–300
thickness, 299, 306
(*See also* Pavement, composite)
preventive maintenance of:
benefits of, 301
chip sealing, 303
crack sealing, 301–303
fog sealing, 303–305
microsurfacing, 305–306
rehabilitation of flexible:
asphalt overlay, 233, 298–301
whitetopping, 301
rehabilitation of rigid:
break and seat, 299
concrete overlay, bonded, 299
concrete overlay, unbonded, 300
crack and seat, 299
overlay, asphalt, 298–300
overlay, concrete, 299, 300
repair, 298–300
restoration, 296, 298
rubblize and roll, 299–300
requirements of, 227
research, 234–235

www.EngineeringEBooksPdf.com

Pavement (*Cont.*):
rigid:
continuously reinforced, 224, 231, 280–283
coring of, 289–290
cracking in, 224, 226–227
design procedure for, 257–266
details of, 227, 228–229
dowels in, 224, 225
fly ash in, 55, 58
intersections of, 227–229
joint layout in, 227–229
joints in, 224, 227–229
reclaimed, 57, 65
recycled materials in, 65
reinforcing in, 224–227, 231, 266
silica fume in, 54
thickness of, 266
types of, 224
(*See also* distress in rigid, *above*;
jointed rigid, *above*;
rehabilitation of rigid, *above*)
rigid, joint seals in:
design of, 227, 230–231
field-molded type, 230–231
friction coefficient, 230
movement, 230
preformed compression type, 231, 232
purpose, 227
sealant reservoir in, 225, 230
shrinkage coefficient, 230–231
thermal coefficient, 230–231
road tests, 234–235, 236, 243
types of, 224
Planning, transportation:
design phase:
criteria, 68
examples of, 68–69
reviews, 70–76
environmental concerns:
air quality, 69
endangered species, 69
farmlands, 69
historic, 69
natural areas, 69
parks, 69
prehistoric, 69
recreation, 69
scenic rivers, 70
streams, 70
water quality, 70
wetlands, 70
(*See also* Environmental impact)
Planning, transportation (*Cont.*):
multimodal system, 67
preliminary development phase:
alternatives, 69–70
information gathering, 69
project inventory, 69
project types, 69
public hearings, 69, 70
program development:
contract award, 76
goals, 67
objectives, 67
project evaluation:

www.EngineeringEBooksPdf.com

criteria, 68
examples of, 68–69
phases, 68–69
statewide, 67
Poles, luminaire:
bases:
direct burial, 646
flange, 646
frangible coupler, 647
shear, 648
slip, 647–648
transformer, 644, 647
breakaway type, 628, 636–637, 638, 639, 646–648, 653–655
design, structural, 655
foundations, 642–645, 649–651, 654
hazard, electrical, 640–641
impact performance, 653–655
location, 638–639
mass, maximum, 653
safety considerations, 640–641
types:
aluminum, 639
concrete, 639–640
fiberglass, 639
steel, 639
steel, stainless, 639
wood, 639
(*See also* Lighting;
Luminaires)

Railings, bridge (*see* Bridges, railing retrofits for;
Bridges, railings for)
Resource recovery (*see* Waste material)
Retaining walls:
anchored:
description, 743
design, 746–748
drainage, 746
loadings, 744–746

www.EngineeringEBooksPdf.com

Retaining walls, anchored (*Cont.*):
pressure, earth, 661, 744–746
settlement, 663
stability, 746
backfill:
friction angle, 663, 671, 693, 696, 708, 714, 720, 752
gradation, 663, 696, 707
plasticity, 663, 685, 686, 697, 707, 751
properties, 663, 675
(*See also* cantilever, gravity type, *below*;
mechanically stabilized earth, *below*;
soil, *below*)
cantilever, gravity type:
backfill, 693
design, 693–697
load cases, 693
pressure, 661
shear key, 690, 693, 696–699
toe depth, 662
toe width, 693–694
worksheet, 667
(*See also* backfill, *above*;
rigid, *below*)
cantilever, nongravity type:
anchors, corrosion of, 743
defined, 738
design, 742
drainage, 741
pressure, earth, 738–741
pressure, water, 741
stability, 742
surcharge loads, 741
classification, 658–660
construction time, 663, 669
cost, 665, 669, 681
cut retention, for, 663–664
design:
checks, 670
life, 663, 713
(*See also* anchored, *above*;
cantilever, gravity type, *above*;
cantilever, nongravity type, *above*;
mechanically stabilized earth, *below*;
rigid, *below*;
selection, *below*;
soil nailed, *below*)
earth pressures on:
calculation of, 673–681
Coulomb theory of, 670–671, 673, 679, 680–681, 738
estimation of, 661
Rankine theory of, 671, 673, 675, 677–679, 693–694
Retaining walls, earth pressures on (*Cont.*):
restraint effect, 672–673
states of, 671–673
externally stabilized, 658–660
facing systems:
concrete, cast-in-place, 698–699, 703, 704, 753, 760–766
concrete, precast, 698, 699, 700–705, 753, 759
fabric, 704
gabions, 704
metallic, 703
plastic, 704
shotcrete, 703
welded wire, 704
fill retention, for, 663

www.EngineeringEBooksPdf.com

foundations:
bearing capacity, 662, 670, 684–685, 687, 705
bearing pressure, 662, 711, 712, 721
borings, 681–682
deep, 660, 663, 673, 681
drilling, core, 682
exploration, subsurface, 681–682
investigations, 681–682
Meyerhof equation, 661, 706, 711, 712, 721
pile, 658, 660, 663, 690, 691
settlement, 662–663, 670, 673, 681, 690, 691
types, 660
(*See also* Rock;
Soil)
gabions, 658, 663, 691
gravity, 658
(*See also* cantilever, gravity type, *above*)
hybrid, 658, 662, 668
internally stabilized, 658, 660
mechanically stabilized earth (MSE):
advantages, 699
backfill, 707, 714, 716
bridge abutment, 757–758, 767–772
California type, 700–701
comparison with soil nailed wall, 752
components, 698, 701–705
construction time, 663
design, 705–738
design example, metal reinforcement, 716–727
design example, polymeric reinforcement, 730–733, 737–738
dimensions, 705

www.EngineeringEBooksPdf.com

Retaining walls, mechanically stabilized earth (MSE) (*Cont.*):
durability, metal reinforcement, 713–716, 724–727
durability, polymeric reinforcement, 716, 727–728
facings, 701–705
Georgia type, 700–701
Hilfiker, 699–700
history of, 699–701
Lane, 700
Maccaferri, 701
Reinforced Earth, 657, 699–700
reinforcement, metal, 699–701, 716–727
reinforcement, polymeric, 698–701
rigid type, 691
settlement, 663
stability, 705–707
superimposed, 711–712
terraced, 711–713
types, 698–701
VSL, 699–700
(*See also* facing systems, *above*)
modular, 658, 663, 767
nongravity, 658, 660
(*See also* cantilever, nongravity type, *above*)
pressure, hydrostatic, 661, 699
purpose, 657, 660
rigid:
defined, 690
design, 690–697
examples, 691
overturning, 691
rotation, 691, 693
settlement, 691
sliding, 691
(*See also* foundations, *above*;
cantilever, gravity type, *above*)
selection:
constraints, aesthetic, 664
constraints, behavioral, 661–664
constraints, economic, 664
constraints, environmental, 664
constraints, spatial, 660–661
evaluation factors, 665
objectives, design, 660
process, 660–670
work sheets, 665–668
semigravity, 658–660, 667, 692
slip circle analysis, 691
Retaining walls (*Cont.*):
soil nailed:
construction, 749–751, 757–759
contracting, 766–767
description, 749–751
design, 753–757, 759–766
design example, 759–766
drainage, 753
MSE walls, comparison with, 752
soils for, 751–752
stability, 753–756, 766
success factors, 751
use, 749
space limitations, 661–662
terminology, 690, 743
use, 657
Rock:
classification, 686–689

www.EngineeringEBooksPdf.com

core drilling, 682
quality, 682
(*See also* Soil)

Safety, roadside:
barriers (*see* Barriers, roadside)
benefits from, 473–475
clear zone concept in, 475–483
concepts of, 473–475
drainage systems:
bridges, on, 347–348
cross drains, 481–482
curbs, 479–481
design options for, 482
drop inlets, 483
extension of, 482
parallel drains, 483
shielding of, 483
supports located in, 484
traversable slopes, on, 482
(*See also* Culverts)
embankment slopes:
backslopes, 478
barrier placement on, 515–517, 520
channels on, 479, 480, 481
critical, 475–476, 478
foreslopes, 475–478
nonrecoverable, 475–476
recoverable, 475–476
transverse, 478–479
traversability of, 475–479
types of, 475
obstacles, 474–475, 483–491
trees, 488

www.EngineeringEBooksPdf.com

Service roads, 181
(*See also* Collector-distributor roads)
Sign panels:
coatings, protective, 605
fastening:
bolts, 588–592
guidelines, 592–593
height, 588, 598–602
multiple supports, to, 602–604
pipe, 589, 591
posts, wood, 589
requirements, 588, 592–593, 598–602
rules, 588
steel shapes, 589–592
stiffeners, 601
tubes, 589–591
U-channels, 589, 590
repair of:
retroflective aluminum, 610
retroflective plywood, 610–611
torsional strength, 543
Sign supports:
aluminum, 543, 547
classification, 547
construction of:
anchor systems, 575
embedment, 575
height, 575, 588, 602–603
location, 574–576, 602, 604
multiple-mount systems, 602, 604
placement, 574–576, 602, 604
vehicle deceleration, 541, 568, 575
(*See also* slip bases for, *below*;
installation, *below*)
design of (*see* construction of, *above*;
multiple mount, *below*;
single mount, *below*)
frangible couplers for, 565, 570–572, 594–596
installation:
frangible couplers, 594–596
hinges, 597–601
multiple mount, 594–598
pipe, steel, 561–562, 582–584, 585
posts, wood, 555–557, 582, 583, 584
slip bases, 584–588, 596–597, 599–601
tubes, steel, 558–561, 580–582
U-channels, steel, 551–555, 576–580
maintenance:
importance of, 574
support straightening, 611
Sign supports (*Cont.*):
multiple-mount:
bidirectional base, 568
design, 566–574
FHWA approval for, 568
hinges, 567–568, 573–574
multidirectional base, 568
required, when, 568
retrofits, 573–574
spacing, 567
slip bases for, 567, 569–570
unidirectional base, 568
(*See also* installation, *above*)
pipe, steel:
anchors, 561–562

www.EngineeringEBooksPdf.com

breakaway, 561
embedment, 561
sign area for, maximum, 561
sizes, 561
posts, wood:
breakaway, 555–557
embedment, 555–556
engineered type, 557
pole type, 557
shaped type, 555–557
sizes, 555, 567
S-shape, steel, 569–570
single mount:
anchor stubs, 551
base-bending type, 543–544, 548–549, 551–552
breakaway type, 540–546, 549–550, 552–553
components, 547
design, 546–562
embedment, 548, 550–551, 552–553, 555, 558, 561
FHWA approval, 550
foundations for, 550
mechanical release type, 550
mounting height, 561
selection, 550–551
sign panels for, 547
slip bases for:
bolt torque, 584–585, 586
components, 562
design, 565–566
foundations, 588
function, 562, 584
horizontal, 563, 565, 570–572, 585
inclined, 562, 563–564, 565, 570, 585
installation, 574–588

www.EngineeringEBooksPdf.com

Sign supports, slip bases for (*Cont.*):
keeper plates for, 562, 565, 585, 596
multidirectional, 563–565, 588
orientation, 586–588
sign area, maximum, 566
unidirectional, 563, 564
weight, maximum supported, 566
(*See also* frangible couplers, *above*)
structural requirements, 543
(*See also* design of, *above*)
tubes, steel:
anchors, 585–561
breakaway, 558–560, 569
embedment, 558–561
sign area, maximum, 558
sizes, 558
(*See also* installation, *above*)
U-channels, steel:
anchor, 552–553
base bending, 552
breakaway, 552–553
characteristics, 543–544, 551–552
dual, 568
embedment, 552–553
mechanical properties, 551
sign area for, maximum, 552
sizes, 551–552
splices, 552–555
(*See also* installation, *above*)
W-shape, steel, 569–570
(*See also* Signing;
Signs;
Supports)
Signal supports (*see* Supports)
Signing:
benefit-cost ratio, 535
expectations, 533
hazards, 534, 535, 536, 537, 540, 541, 545
legal responsibility:
liability, 535–536, 604
minimization, 536
negligence, 535–536, 604
sovereign immunity, 535
tort elements, 535
uniformity:
benefits of, 534
deviations from, 534–535
state application of, 536
(*See also* Sign supports;
Signs)
Signs:
antitheft devices, 606–608
categorized, 543
components, 547
height, 539, 545
large, 543, 545
Signs (*Cont.*):
letters for, 536, 539
location, 536–537, 539, 545, 575
maintenance of:
cleaning, 609–610
patching, 610–611
purpose, 608–609
repair, 609, 610–611
replacement, 609

www.EngineeringEBooksPdf.com

support straightening, 611
need, 542–543
number of, 542–543
small, 543
structural requirements, 543–545
vandalism of:
categories, 604
costs, 604
destruction, 604
mutilation, 604–605
reduction in, 605–608
theft, 605
(*See also* maintenance of, *above*)
warning, 534–535, 536–539, 574
warrants for, 543, 617
(*See also* Sign panels;
Sign supports;
Signing;
Supports)
Social factors, environmental evaluation of, 19
Soil:
adhesion, 673, 676
analysis, 683–685
borings, 682
classification, 675, 684, 685, 689
coarse-grained, 685
cohesion, 671–672, 676, 688
consistency, 682
consolidation, 682, 690
density, 682
fine-grained, 684, 685
friction angle, 663, 671, 693, 714–716
gradation, 686
grain size, 686, 689
porosity, 682–683
properties, 673, 675, 682–683
samplers, tube, 682
shear strength, 689
tests:
Atterberg limit, 685, 686
compression, unconfined, 682, 688
consolidation, 682
friction angle, 707, 714
hydrometer analysis, 686
liquid limit, 684, 685, 686
penetration, standard, 682

www.EngineeringEBooksPdf.com

Soil, tests (*Cont.*):
plastic limit, 684, 685, 686
plasticity index, 685
shear, direct, 687
shear, triaxial, 687
sieve analysis, 686, 689
unconfined compression, 688
void ratio, 683
weight-volume relationships, 683
(*See also* Rock)
Speed:
crawl, 77
design, 78
Storm drains (*see* Culverts;
Drainage;
Storm water systems)
Storm water systems:
construction of, notice of intent for, 28, 31
discharge into, control procedures for, 32, 33
environmental regulations for, 24, 26–32
environmental report on, annual, 28, 33
permits for:
comprehensive, 33
construction, 28, 31–32
municipal, 27–28, 33
(*See also* Culverts;
Drainage)
pollution prevention of, 26–33
Structural steel:
A36, 318–320
A514, 318–320
A572, 318–320
A588, 318–320
A709, 318–320
A852, 318–320
bridges:
advantages of, 328
types of, 339–341
(*See also* Bridges)
high-strength, 318–320
HPS, 318–319
price of, 320
weathering, 318–320, 329–330
Supports, safety considerations for:
aluminum, 543, 547
base-bending type, 543–544, 548–549, 552
breakaway type, 484–488, 540–546, 549–550, 552–553, 555–557, 559, 561, 569, 574, 581, 583, 584, 585, 594–596, 603
(*See also* Sign supports, frangible couplers for;
Sign supports, slip bases for)
clear zone, 540
crash tests, 484
design options, 484, 540
Supports, safety considerations for (*Cont.*):
impact performance, 543–546
large signs, for, 484–486
luminaires, for, 486
overhead type, 484
pendulum tests, 484
placement, lateral, 545, 575
selection guidelines, 545
sign location, 539–540
small signs, for, 486
soil conditions, 544, 548, 550
specifications, 534, 541, 543
speed, effect of, 541–542

www.EngineeringEBooksPdf.com

steel, 543
terrain, influence of, 545–546
testing guidelines, 541–542
traffic signals, for, 486, 488
traversable area, 540, 548, 575, 640
U-channels, 543, 551–555
utilities, 488
yielding type, 540–541, 543, 544

Tires, scrap:
environmental legislation on, 36, 55
quantity of, 61
use of, 61–64, 65
Traffic:
congestion:
characterization, 195–196
cost, 195–196
demand-capacity graph, 196
types, 195
numbers:
average daily traffic (ADT), 77
design hourly volume (DHV), 77
directional design hourly volume (DDHV), 77
truck percentage, 77
vehicle categories, 77
Transitions, multilane:
converging roadways (*see* entrance ramps, *below*)
diverging roadways (*see* exit ramps, *below*)
entrance ramps:
continuity, 175, 178
curvature, horizontal, 175
curvature, vertical, 179
design, 175, 178
joint location, 179
superelevation, 179
traffic flow, 175, 178

www.EngineeringEBooksPdf.com

Transitions, multilane (*Cont.*):
exit ramps:
continuity, 179, 180
curvature, horizontal, 179–180
curvature, vertical, 181
design, 179–181
joint location, 181
superelevation, 181
terminals, 179–181
exits, left-hand, 175
exits, right-hand, 175
four lanes to two, 181, 182
Transportation Equity Act (TEA-21), 4, 6, 55

Value engineering:
AASHTO role in:
awards, 830, 832–833
benefits, 804–805
change proposals, 807–808
overview, 804
program elements, 804
study selection, 805–806
team structure, 806
training, 805
change proposals for, 801, 803, 804, 807–808
concept of, 797, 801
construction costs in, 798, 801, 806, 825, 826
contractor proposals for, 801, 803, 804–805, 807–808
cost model for, 825, 826
definition of, 797, 801
examples of:
bridge construction, 832, 833
environmental impact, 832
geotechnical investigation, 832
light rail construction, 833
safety improvement, 833
FHWA role in:
goals, 798
objectives, 798
overview, 797–798
policy, 800–803
quality, 788–799
review steps, 800
function analysis system technique (FAST) diagram for:
construction of, 822–824
critical path in, 822
guidelines for, 821–822
purpose of, 820–821
summary of, 824–825
verb-noun method in, 820, 821
Value engineering (*Cont.*):
job plan concept for, 808–809
job plan details for:
acceptance enhancement in, 819
alternatives in, 815
analysis criteria in, 814
analysis phase of, 811, 812–814
analysis techniques in, 813
blast-create-refine method in, 812
creative phase of, 809, 811–812
development phase of, 815–816
human relations in, 810, 815
idea stimulators in, 811–814

www.EngineeringEBooksPdf.com

implementation phase of, 819–820
information phase of, 810–811
information sources in, 810
information types in, 810
presentation phase of, 816–819
reports in, 816–817, 818, 819–820
testing in, 814, 815, 816
use of, 809
legislation on, 797, 800
life cycle cost (LCC) analysis in:
annual recurring cost for, 829
annualized initial cost for, 829
annualized nonrecurring cost for, 829
calculation methods for, 829–830
considerations for, 826–828
cost categories for, 828
design life for, 827
discount rate for, 828
example of, 830, 831
federal rules for, 828
inflation effects for, 830
present worth for, 829
residual value for, 827, 828, 829
salvage value for, 827, 828, 829, 830
total annual cost for, 829
(*See also* Pavements, life cycle cost analysis of)
origins of, 787
project selection for, 805–806
proposals for, 804, 807–808
SAVE, certification for, 805
savings from, 797, 798, 801–802, 803, 807, 832–833
state role in, 802–803
teams for, 806
U.S. DOT policy on, 797–803
workshops for, 798, 805
worth model for, 825–826

www.EngineeringEBooksPdf.com

Walls, noise (*see* Noise barriers)
Warning devices, supplemental, 534–535, 536–539
(*See also* Signs, warning)
Waste material:
coal ash, 57
economics of, 54
engineering properties of, 54
environmental legislation for:
Intermodal Surface Transportation Efficiency Act (ISTEA), 4, 6, 55
Resource Conservation and Recovery Act (RCRA), 24, 36, 41, 43, 54, 55
fly ash, 55, 57, 58, 60, 65
generation of, 55
oil, 66
pavement, asphalt, 56, 57
pavement, concrete, 57
plastics, 55, 60, 65
recycled:
considerations in, 52–54
highway uses of, 36, 54–64
regulations on, 24, 54–55
research on, 55
Waste material (*Cont.*):
slag, 57, 65
tires, 61–64
types of:
agricultural, 59
construction, 55–56
domestic, 56–58
industrial, 57–59
mining, 58–59
(*See also* Hazardous wastes;
Pavement, asphalt;
Pavement, concrete;
Tires, scrap)
Wastewater, environmental regulations, 26–28
Water, fresh, environmental protective legislation for:
Clean Water Act (CWA), 26–28, 42
Federal Water Pollution Control Act, 26–27
Safe Drinking Water Act, 24–34
Wetlands:
environmental evaluation of, 12–13
legislation, 6, 34
only-practical-alternative finding, 34
(*See also* Land use)
Wildlife, 3, 13, 15, 24, 34, 35, 38
(*See also* Land use)

www.EngineeringEBooksPdf.com