ArcelorMittal Europe - Long Products
Sections and Merchant Bars

ArcelorMittal

# Earthquake Resistant Steel Structures

www.EngineeringEbooksPdf.com

## Aim of this document

This document aims to present in a straightforward manner the essentials of seismic design of steel structures, which is a field of engineering and construction to which ArcelorMittal contributes by continuous research efforts that bring better steel products and original design solutions to the market. These include the widely used Reduced Beam Section concept (RBS or 'dog-bone') for moment resisting frames (Section 10), INERD dissipative connections for braced frames (Section 12), and the use of composite columns to mitigate soft storey failures in reinforced concrete structures (Section 18).

www.EngineeringEbooksPdf.com

# Contents


1. What is an Earthquake? 4
2. Why are Steel Structures Good at Resisting Earthquakes? 8
3. A Tool to Evaluate the Effects of Earthquakes: the Response Spectrum 11
4. Design Response Spectra 15
5. Characterisation of Structures Specific to Seismic Design 20
6. Aspects of Seismic Analysis and Design Checks Common to all Structural Types 25
7. Approximate Method for Seismic Analysis and Design 30
8. Architecture of Earthquake Resistant Buildings 34
9. Designing Dissipative Structures 40
10. Seismic Design of Moment Resisting Frames 47
11. Seismic Design of Frames with Concentric Bracing 60
12. Seismic Design of Frames with Concentric Bracing and Dissipative Connections 65
13. Seismic Design of Frames with Eccentric Bracing 68
14. Composite Steel Concrete Structures 73
15. Composite Steel Concrete Moment Resisting Frames 89
16. Composite Steel Concrete Frames with Bracing 91
17. Composite Steel Concrete Walls and Systems with Walls 94
18. Improving Reinforced Concrete Structures by using Composite Columns 99
19. Design Example 102

Annex A Definition of Eurocode 8 Design Response Spectra 122
Annex B Steels available from ArcelorMittal 122
References 123

Technical advisory & Finishing 124
Your Partners 125




www.EngineeringEbooksPdf.com

# ArcelorMittal Technical Brochure: Earthquake Resistant Steel Structures

**1. What is an Earthquake?**
The physical phenomenon. Action applied to a structure by an earthquake. Characterisation of seismic action.

**2. Why are Steel Structures Good at Resisting Earthquakes?**
The paramount importance of ductility. Flexibility and low weight.

**3. A Tool to Evaluate the Effects of Earthquakes: the Response Spectrum.**
Response of structures subjected to an earthquake. How is an Elastic Response Spectrum established? Code elastic response spectrum. Elastic displacement response spectrum.
Multimodal response.

**4. Design Response Spectra.**
From one elastic response spectrum to design response spectra. Importance of the structure. Remote or near field earthquake. Soil and site. Ductility of the structure. Example of design spectra.

**5. Characterisation of Structures Specific to Seismic Design.**
Behaviour factors. Ductility Classes. Plastic redistribution parameter.

**6. Aspects of Seismic Analysis and Design Checks Common to all Structural Types.**
Seismic mass. Methods of analysis. Torsion. Displacements in dissipative structures. Resistance condition. Limitation of second order effects.

**7. Approximate Method for Seismic Analysis and Design.**
Choice of units. Simple elastic analysis method. Estimation of the fundamental period *T1* of a building.

**8. Architecture of Earthquake Resistant Buildings.**
Basic features of an earthquake resistant building. Primary structure and secondary structure. Objectives of conceptual design. Principles of conceptual design of an earthquake resistant structure.

**9. Designing Dissipative Structures.**
Principle. Designing reliable dissipative zones. The many local dissipative mechanisms available in steel structures. Non dissipative local mechanisms. Design of non dissipative elements in a dissipative structure. Capacity design applied to connections. Capacity design applied to bars with holes. Design criteria for dissipative structures. Selecting a Ductility Class for design. Selecting a typology of structure for design.

**10. Seismic Design of Moment Resisting Frames.**
Design objective for moment resisting frames (or MRFs). US and European Ductility Classes. Design criteria. Redistribution of bending moments in beams. Other requirements. Plastic hinges. Recommended designs for beam to column connections. Design of reduced beam sections. Connections of columns to foundations.

**11. Seismic Design of Frames with Concentric Bracing.**
Design objective. Analysis of X bracing. Design Criteria for X bracing. Other requirements for X bracing. Design of connections. Analysis of V or Λ bracing. Design Criteria for V or Λ bracing. Other requirements for V or Λ bracing. US and European design rules for frames with concentric bracing.

**12. Seismic Design of Frames with Concentric Bracing and Dissipative Connections.**
Interest of dissipative connections in frames with concentric bracings. Analysis of frames with X, V or Λ bracing and dissipative connections for the diagonals. Design Criteria for frames with X, V or Λ bracing and dissipative connections for the diagonals.

www.EngineeringEbooksPdf.com

**13. Seismic Design of Frames with Eccentric Bracing.**
General features of the design of frames with eccentric bracing. Short links and long links. Selection of a type of eccentric bracing.

**14. Composite Steel Concrete Structures.**
Introduction. How can composite structural elements be dissipative? A basic choice in the design of dissipative composite structures; the degree of composite 'character'. Design concepts and behaviour factors q in the context of the Eurocodes. Materials. Stiffness of sections. Plastic resistance of dissipative zones. Ductility in bending of composite beams. Detailing rules for composite connections in dissipative zones. Favourable influence of concrete encasement on local ductility. General rules for the design of dissipative and non dissipative elements. Anchorage and splicing of reinforcement bars. Fully encased composite columns. Partially encased members. Steel beams acting composite with the slab. Effective width of slab.

**15. Composite Steel Concrete Moment Resisting Frames.**
Design objective. A basic choice; the degree of composite 'character'. Analysis.

**16. Composite Steel Concrete Frames with Bracing.**
Composite frames with concentric bracing. Composite frames with eccentric bracing.

**17. Composite Steel Concrete Walls and Systems with Walls.**
Definition of the various composite wall systems and the design objectives. Analysis. Detailing rules for composite walls of ductility class DCM. Detailing rules for coupling beams of ductility class DCM. Additional detailing rules for ductility class DCH. Composite steel plate shear walls.

**18. Improving Reinforced Concrete Structures by using Composite Columns.**
Problem definition and design conditions of composite columns. Behaviour of composite columns subjected to compression and cyclic bending.

**19. Design Example.**
Presentation. Checking moment resistance and deflection limits for beams. Weak Beam-Strong Column checks. Interior column. Check in compression. Plastic resistance in bending at basement level. Evaluation of the seismic mass. Design spectrum. Evaluation of seismic design shear by the 'lateral forces' method. Gravity load to combine with earthquake effects. Dynamic analysis by spectral response and modal superposition method. Results of the analysis. Design of beam to column connection at an interior joint in line X2. Comments on design options. Design of a reduced beam section. Economy due to RBS.

**Annex A.**
Definition of Eurocode 8 Design Response Spectra.

**Annex B.**
Steels available from ArcelorMittal.

**References.**



www.EngineeringEbooksPdf.com

# 1. WHAT IS AN EARTHQUAKE?

The physical phenomenon.

Action applied to a structure by an earthquake.

Characterisation of seismic action.

www.EngineeringEbooksPdf.com

## The physical phenomenon

The most important earthquakes are located close to the borders of the main tectonic plates which cover the surface of the globe. These plates tend to move relative to one another but are prevented from doing so by friction until the stresses between plates under the 'epicentre' point become so high that a move suddenly takes place. This is an earthquake. The local shock generates waves in the ground which propagate over the earth's surface, creating movement at the bases (foundations) of structures. The importance of the waves reduces with the distance from the epicentre. Therefore, there exist regions of the world with more or less high seismic risk, depending on their proximity to the boundaries of the main tectonic plates (the red lines in Figure 1).

**Figure 1**
World map showing the main tectonic plates
(from Bristol University website: www.ideers.bris.ac.uk
http://en.wikipedia.org/wiki/Image:Tectonic_plates_boundaries_detailed-en.svg).

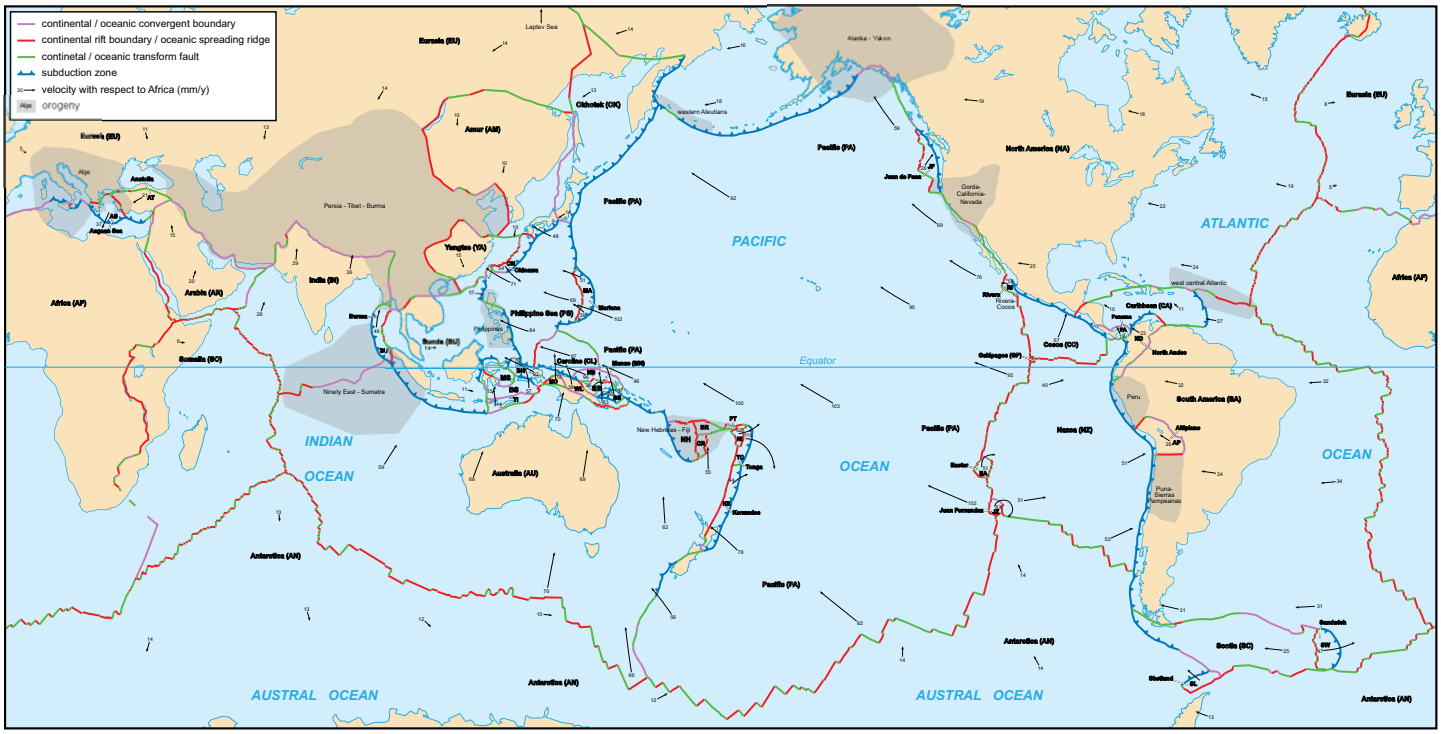




www.EngineeringEbooksPdf.com

Besides the major earthquakes which take place at tectonic plate boundaries, others have their origin at the interior of plates at fault lines. Called 'intraplates' earthquakes, these release less energy, but can still be destructive in the vicinity of the epicentre.

Maps of 'seismic hazard' (peak ground accelerations at the bedrock level) show the distribution of earthquake levels in the world and in Europe (see Figure 2). They show that earthquakes may occur in places other than those near the tectonic plate boundaries.

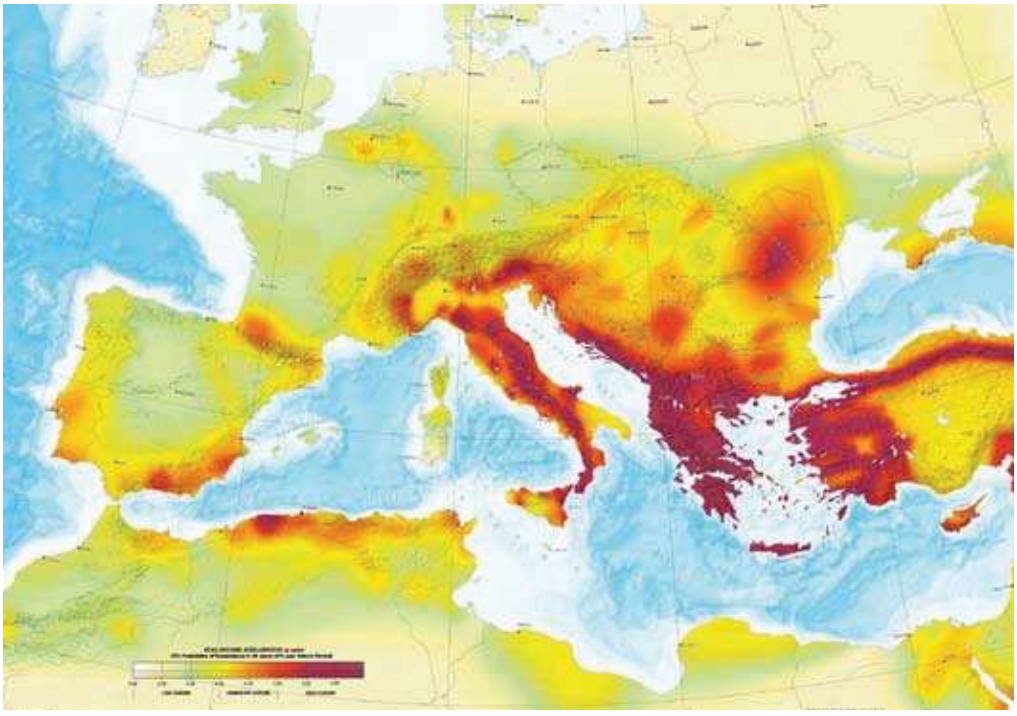

**Figure 2**
World and European Peak Ground Acceleration Maps
(From GFZ-Potsdam website http://seismohazard.gfz-potsdam.de/projects/en/).

www.EngineeringEbooksPdf.com

## Action applied to a structure by an earthquake

The action applied to a structure by an earthquake is a ground movement with horizontal and vertical components. The horizontal movement is the most specific feature of earthquake action because of its strength and because structures are generally better designed to resist gravity than horizontal forces. The vertical component of the earthquake is usually about 50% of the horizontal component, except in the vicinity of the epicentre where it can be of the same order.

## Characterisation of seismic action

Earthquakes can be characterised in different ways. The magnitude $M$ (Richter scale) expresses the total energy liberated and does not give direct information about the earthquake action at a given site.
The intensity $I$ (for example the Mercalli scale) describes the effects on structures at a given place and relates these to a given number; for instance 7 corresponds to serious cracks in masonry. Other characterisations may be more useful for designers.

The ground acceleration $a_g(t)$ at a given location, or its equivalent the ground displacement $d_g(t)$, are recorded as a function of time. They are the most explicit data and as such can be used in time-history analysis of structures.

Two sub-products of the ground acceleration $a_g(t)$ are the most commonly used data in earthquake engineering:

- The maximum value of acceleration $a_g(t)$ at the bedrock level, or Peak Ground Acceleration (PGA, symbol $a_{gR}$ in Eurocode 8), is the parameter used to define the seismic hazard in a given geographic area. National seismic zone maps are usually presented in terms of Peak Ground Accelerations (see Figure 2). PGAs range from 0,05 g in very low seismic zones to 0,4 g in highly seismic zones (for example California, Japan or Turkey).
- The acceleration response spectrum is the standard representation of earthquake action considered in building design. Its meaning is explained in Section 3.



www.EngineeringEbooksPdf.com

# 2. WHY ARE STEEL STRUCTURES GOOD AT RESISTING EARTHQUAKES?

The paramount importance of ductility.
Flexibility and low weight.

www.EngineeringEbooksPdf.com

## The paramount importance of ductility

Experience shows that steel structures subjected to earthquakes behave well. Global failures and huge numbers of casualties are mostly associated with structures made from other materials. This may be explained by some of the specific features of steel structures.

There are two means by which the earthquake may be resisted:

- Option 1; structures made of sufficiently large sections that they are subject to only elastic stresses
- Option 2; structures made of smaller sections, designed to form numerous plastic zones.

A structure designed to the first option will be heavier and may not provide a safety margin to cover earthquake actions that are higher than expected, as element failure is not ductile. In this case the structure's global behaviour is 'brittle' and corresponds for instance to concept a) in a Base Shear *V*- Top Displacement d diagram, as shown in Figure 3. In a structure designed to the second option selected parts of the structure are intentionally designed to undergo cyclic plastic deformations without failure, and the structure as a whole is designed such that only those selected zones will be plastically deformed.

The structure's global behaviour is 'ductile' and corresponds to concept b) in the Base Shear *V*- Top Displacement *d* diagram of Figure 3. The structure can dissipate a significant amount of energy in these plastic zones, this energy being represented by the area under the *V*-*d* curve. For this reason, the two design options are said to lead to 'dissipative' and 'non-dissipative' structures.

**Figure 3**
Examples of 'Dissipative' and 'non dissipative' global behaviours of structures. The 'non dissipative' structure fails in a single storey mechanism. (From [13]).

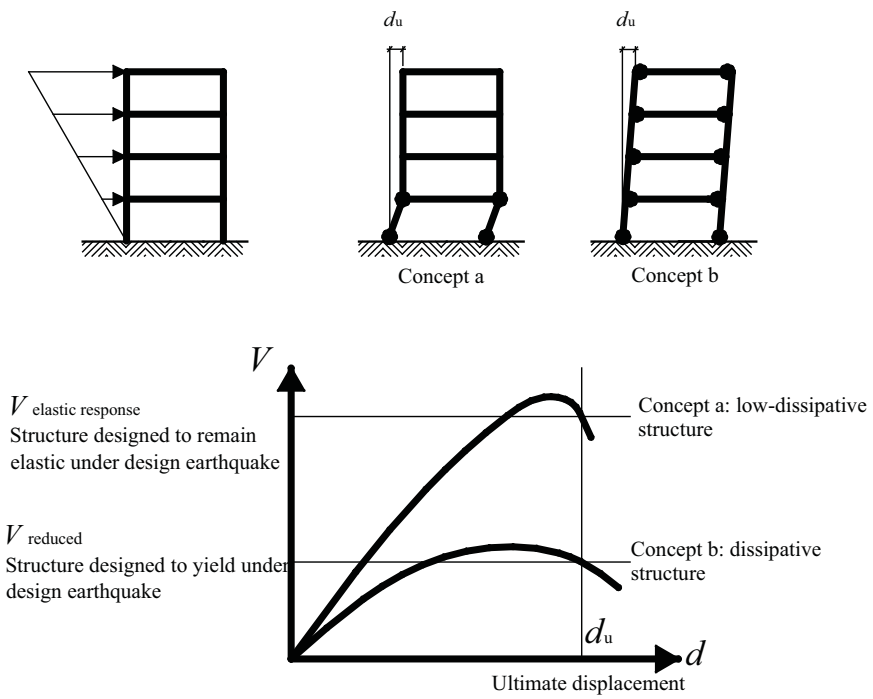




www.EngineeringEbooksPdf.com

A ductile behaviour, which provides extended deformation capacity, is generally the better way to resist earthquakes. One reason for this is that because of the many uncertainties which characterise our knowledge of real seismic actions and of the analyses we make, it may be that the earthquake action and/or its effects are greater than expected. By ensuring ductile behaviour, any such excesses are easily absorbed simply by greater energy dissipation due to plastic deformations of structural components. The same components could not provide more strength (a greater elastic resistance) when option 1 is adopted. Furthermore, a reduction in base shear V ($V_{reduced} < V_{elastic}$) means an equal reduction in forces applied to the foundations, resulting in lower costs for the infrastructure of a building.

Steel structures are particularly good at providing an energy dissipation capability, due to:

- the ductility of steel as a material
- the many possible ductile mechanisms in steel elements and their connections
- the effective duplication of plastic mechanisms at a local level
- reliable geometrical properties
- a relatively low sensitivity of the bending resistance of structural elements to the presence of coincident axial force

The variety of possible energy dissipation mechanisms in steel structures, and the reliability of each of these possibilities, are the fundamental characteristics explaining the excellent seismic behaviour of steel structures. Furthermore, steel structures tend to have more reliable seismic behaviour than those using other materials, due to some of the other factors that characterise them:

- guaranteed material strength, as result a of controlled production
- designs and constructions made by professionals

## Flexibility and low weight

There are other advantages for steel structures in a seismic zone, namely their flexibility and low weight. Stiffer and heavier structures attract larger forces when an earthquake hits. Steel structures are generally more flexible than other types of structure and lower in weight (as discussed below). Forces in the structure and its foundations are therefore lower. This reduction of design forces significantly reduces the cost of both the superstructure and foundations of a building.

Steel structures are generally light in comparison to those constructed using other materials. As earthquake forces are associated with inertia, they are related to the mass of the structure and so reducing the mass inevitably leads to lower seismic design forces. Indeed some steel structures are sufficiently light that seismic design is not critical. This is particularly the case for halls/sheds: they create an envelope around a large volume so their weight per unit surface area is low and wind forces, not seismic forces, generally govern the design. This means that a building designed for gravity and wind loads implicitly provides sufficient resistance to earthquakes. This explains why in past earthquakes such buildings have been observed to perform so much better than those made of heavy materials.

www.EngineeringEbooksPdf.com

# 3. A TOOL TO EVALUATE THE EFFECTS OF EARTHQUAKES: THE RESPONSE SPECTRUM

Response of structures subjected to an earthquake.

How is an Elastic Response Spectrum established?

Code Elastic Response Spectrum.

Elastic Displacement Response Spectrum.

Multimodal Response.



www.EngineeringEbooksPdf.com

## Response of structures subjected to an earthquake

The ground movement $d_g(t)$ displaces the structure horizontally and dynamically. If the structure is infinitely stiff all its points are displaced equally by the amount of ground movement $d_g(t)$, so there is no displacement of the structure relative to its base. In a flexible structure, the movement of every point depends on the mechanical characteristics of all the structural elements (stiffness) and on the distribution of masses in the structure (a structure without mass would be submitted to zero force). There is therefore a dynamic response, which involves all the vibration modes of the structure. Some modes are global and involve the whole structure whereas other modes, like floor vibrations, are local (see Figure 4). Each vibration mode is characterised by its period $T$ (in s) and the portion of the total mass associated with that mode (modal mass).

**Figure 4**
Example of vibration modes.

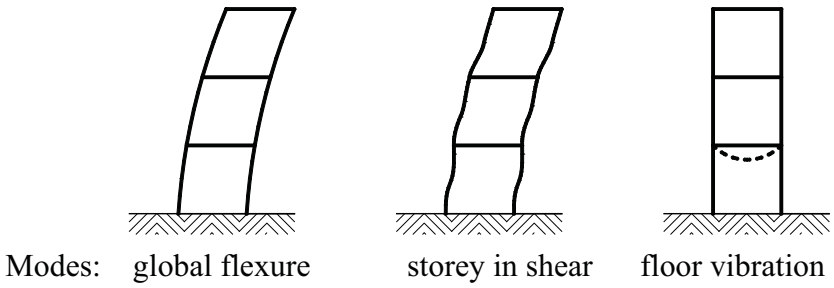


## How is an Elastic Response Spectrum established?

By making a set of time-history analyses of dynamic responses of structures, it is possible to produce a 'response spectrum'. This is said to be 'elastic' if it corresponds to a structure responding with purely elastic deformations. The elastic response spectrum is of interest to designers as it directly provides the peak value of the dynamic response of a given structure under a given accelerogram characteristic of a given seismic area. The process by which a spectrum is built up is sketched in Figures 5 and 6.

The most simple form of structure representing a building is considered; it is a vertical cantilever of stiffness $k$ ( $k = EI/H$) with a concentrated mass $M$ at level H above ground (see Figure 5). Such a structure has a single natural period of vibration $T_1$ related to its mass and stiffness. The period can be observed by displacing the mass $M$ and releasing it; the structure vibrates at its natural period $T_1$, which can be calculated as:

**Figure 5**
Definition of pseudo acceleration $\beta(T_1)$ for a cantilever of given properties.

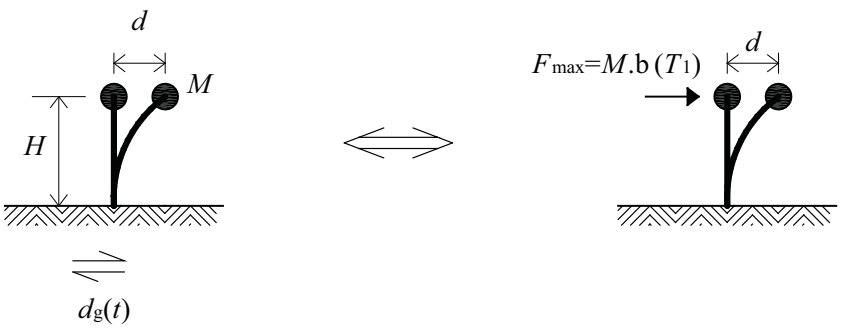


$$T_1 = 2\pi\sqrt{\frac{MH^3}{3EI}}$$

www.EngineeringEbooksPdf.com

The mathematics of elastic structural dynamics are used to make time-history analyses of the movement of this cantilever subjected to one ground movement characterised by $d_g(t)$ or by one accelerogram $a_g(t)$. The mass M moves relative to its base by a displacement d (see Figure 5). It is possible to define a force $F(t)$ which generates a displacement d similar to the one generated by $d_g(t)$. By selecting the maximum value Fmax of $F(t)$ and expressing the fundamental law of dynamics $F_{max}$ = mass x acceleration, a 'pseudo acceleration' $\beta(T_1)$ is defined: $\beta(T_1) = F_{max} / M$

By varying the parameters defining the cantilever (other masses M, other stiffnesses k, resulting in other fundamental periods $T = T_1$, $T_2$, etc), a set of values $(T, \beta(T))$ is determined. This set is known as an 'acceleration response spectrum $\beta$' (see Figure 6). Once established, a direct evaluation of the maximum deformation and stresses in a cantilever structure of mass $M$ and stiffness $EI/H$ is deduced:

- the period $T_1$ is given by

$$T_1 = 2\pi\sqrt{\frac{MH^3}{3EI}}$$

- the pseudo-acceleration $\beta(T_1)$ is read from the spectrum
- the maximum force $F_{max} = M\beta(T_1)$ equivalent to the earthquake is then determined and the deformation and stresses in the cantilever deduced

In the analysis described above, the amplitude of the displacement d of the mass relative to the base is influenced by the damping of the system: if there was no damping, d might become infinite. The damping which can be related to a material working elastically is low, of the order of 1% of the "critical" damping, which is a damping such that the cantilever at Figure 5, when displaced of d from its position at rest, would come back to that position without oscillating. But in the structures submitted to earthquakes, there are other sources of damping, like friction in the connections, friction between partitions and structure, etc...Those influences have been evaluated and led to a standard value of "structural" damping equal to 5% in the seismic context.

## Code Elastic Response Spectrum

There will inevitably be uncertainties about the accelerogram that would apply at a given site for a future earthquake, and the 'acceleration response spectrum $\beta$' constructed as explained above, which is related to one single accelerogram, is certainly too specific. Uncertainties about future earthquakes are addressed by considering several accelerograms, deriving response spectra $\beta(T_1)$ corresponding to these accelerograms, and then establishing for the design code an 'average' of all these spectra $\beta(T_1)$. In this way, a code 'elastic acceleration response spectrum $S_e(T)$' is established (see Figure 7).

**Figure 6**
Establishing an elastic response spectrum as a function of $\beta(T_1)$

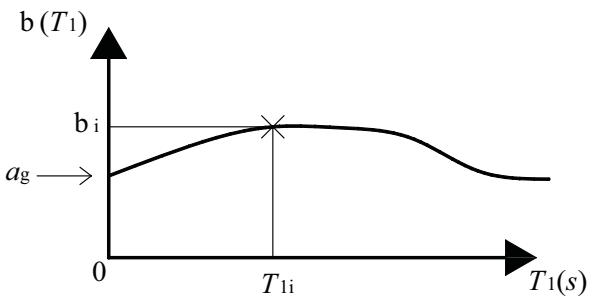


**Figure 7**
Construction of a code elastic response spectrum

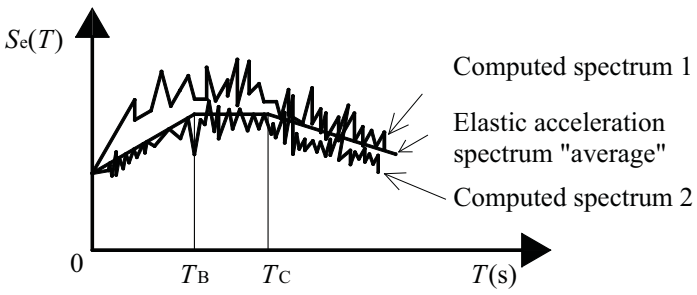




www.EngineeringEbooksPdf.com

The 'averaging' process described above is in part statistical and in part based on practical engineering judgment, so that the shape of the code reference elastic response spectrum $S_e(T)$ is more schematic than that of each individual response spectrum $\beta(T_1)$. Eurocode 8 defines one single shape as a reference elastic acceleration response spectrum $S_e(T)$ and that shape is represented at Figure 8. But the formulation of the spectrum takes into account a series of parameters and it allows generate local spectra which can be very different. The spectrum at Figure 8 is normalised by $a_g$ in order to be valid independently of $a_g$. The spectrum is related to a factor $S$, which depends on the site, and to a factor $\eta$, which is different from 1 if the damping can be proved to be different from the standard value of 5% explained above (see the formulation of spectra in Annex A). The elastic acceleration response spectrum $S_e(T)$ has 'break points' $T_B$, $T_C$ and $T_D$ which are also related to local values of site and soil parameters.

The evaluation of the maximum deformation and stresses in a cantilever structure of mass M and stiffness $EI/H$ is made as indicated above, resulting in a maximum force: $F_{max} = M\, S_e(T)$ For an infinitely stiff structure (period T=0), the pseudo acceleration $S_e(T)$ is equal to the ground acceleration $a_g\, S$ and $F_{max} = M\, a_g\, S$. For flexible structures, there is a 'dynamic amplification' up to approximately $F_{max} = 2{,}5\, M\, a_g\, S$.

## Elastic Displacement Response Spectrum

A mathematical process similar to the one used to define an elastic acceleration response spectrum can be applied to define an 'elastic displacement spectrum $S_{De}(T)$'. $S_{De}(T)$ is the displacement $d$ of the mass $M$ relative to the cantilever base (see definition of d in Figure 5). In the elastic single degree of freedom oscillator, accelerations $S_e(T)$ and displacements $S_{De}(T)$ are linked by the expression:

$$S_{De}(T) = S_e(T)\left[\frac{T}{2\pi}\right]^2$$

## Multimodal Response

For a structure characterised by several vibration modes, the response spectrum allows calculation of the maximum effects corresponding to each mode ('spectral response'). The maximum effects then have to be 'superimposed' to assess the maximum response. Taking into consideration the fact that the different maxima are not simultaneous, a square root of the sum of the squares (SRSS) combination of the earthquake effects $E_{Ei}$ (bending moments, etc) found in each mode is most often adopted because it provides the most probable value of the maximum multimodal response:

$$E_E = \sqrt{\Sigma\, E_{Ei}^{\,2}}$$

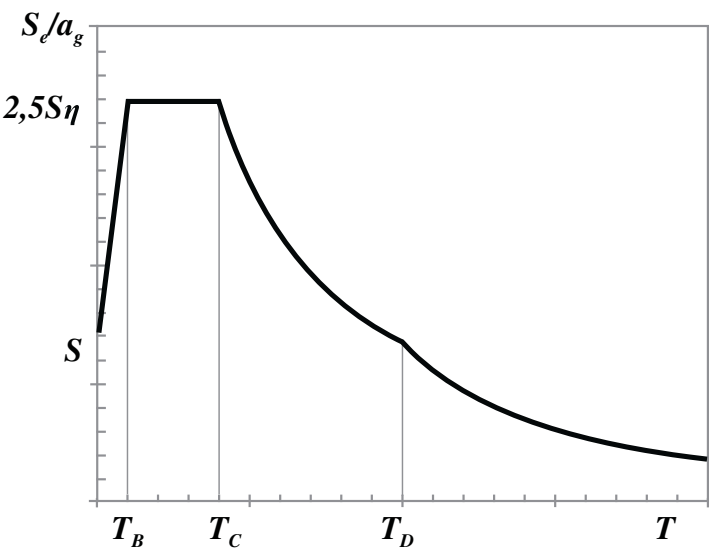


**Figure 8**
Eurocode 8 reference shape of the elastic acceleration response spectrum $S_e(T)$

www.EngineeringEbooksPdf.com

# 4. DESIGN RESPONSE SPECTRA

From one Elastic Response Spectrum to Design Response Spectra.
Importance of the structure.
Remote or near field earthquake.
Soil and site.
Ductility of the structure.
Example of Design Spectra.



www.EngineeringEbooksPdf.com

## From one Elastic Response Spectrum to Design Response Spectra

Many factors in addition to those considered in the definition of an elastic acceleration response spectrum $S_e(T)$ are relevant in the response of structures to earthquakes. Design response spectra $S_d(T)$ are obtained by modifying this elastic response spectrum $S_e(T)$ to take into account all these factors, and produce spectra which can be used in elastic analysis of structures. The factors influencing the design spectra are defined in the following paragraphs.

## Importance of the structure

The definition of a 'design' Peak Ground Acceleration $a_g$ is statistical and corresponds to the acceptance of a certain level of risk, therefore the design value of $a_g$ should be greater for structures of greater importance. In Eurocode 8 a reference peak ground acceleration $a_{gR}$ corresponding to a standard level of risk is defined. The design PGA value of $a_g$ is obtained by multiplying $a_{gR}$ by $\gamma_I$, which is a 'coefficient of importance' of the designed structure: $a_g = \gamma_I a_{gR}$. $\gamma_I$ is equal to 1 for standard buildings (Class II) and up to 1,4 for structures whose structural performance is vital during an earthquake (Class IV). Table 1 gives the values recommended for $\gamma_I$ in Eurocode 8 for different categories of importance of buildings.

**Table 1**
Importance classes for buildings and recommended values of $\gamma_I$ (EN1998-1:2004).

| Importance class | Buildings | $\gamma_I$ |
|---|---|---|
| I | Buildings of minor importance for public safety, for example agricultural buildings. | 0,8 |
| II | Ordinary buildings not belonging in the other categories. | 1,0 |
| III | Buildings whose seismic resistance is of importance in view of the consequences associated with a collapse, for example schools, assembly halls, cultural institutions, etc. | 1,2 |
| IV | Buildings whose integrity during earthquakes is of vital importance for civil protection, for example hospitals, fire stations, power plants, etc. | 1,4 |

www.EngineeringEbooksPdf.com

## Remote or 'near field' earthquake

A reference peak ground acceleration $a_{gR}$ at a given location can result from different types of earthquakes; a stronger, but more remote earthquake or a smaller earthquake in the vicinity. This is a matter of geology and geography, but the response spectra corresponding to these two types differ because the wave propagations from remote locations or locations in the vicinity generate results which are different. In Eurocode 8, the possibility of different seismic events is taken into account by defining spectral shapes Type 1 and Type 2.

- A Type 1 shape should be considered if remote earthquakes are strong enough (magnitude $M_S \geq 5{,}5$) to generate significant accelerations at the proposed construction site, and these contribute most to the seismic hazard.
- A Type 2 spectral shape applies if earthquakes of magnitude $M_S < 5{,}5$ contribute most to the seismic hazard.

In some regions the design spectrum can be a combination of Types 1 and 2. The data to define Type 1 and Type 2 spectral shapes are given in Table 2, combined with those due to soil and site effects explained hereunder. The schematic influence of the earthquake type can be seen at Figure 9.

**Figure 9**
Elastic acceleration response spectra $S_e(T)$ of Eurocode 8 for Type 1 and Type 2 earthquakes and for various natures of site conditions.

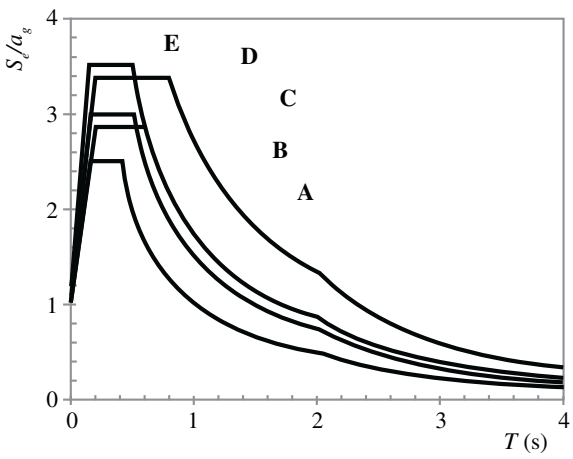


Type 1 spectrum.
Remote earthquakes of magnitude $M_S \geq 5{,}5$

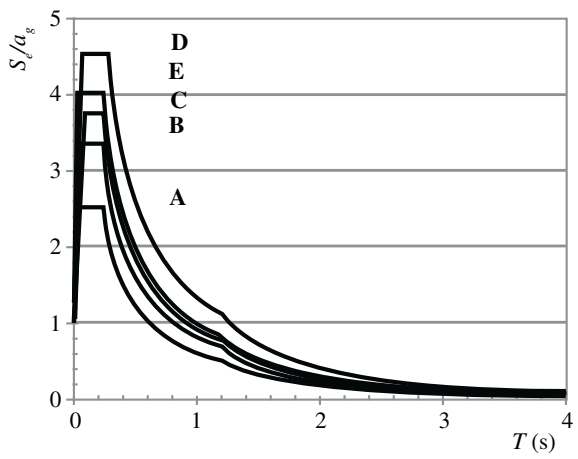


Type 2 spectrum.
Earthquakes of magnitude $M_S < 5{,}5$



www.EngineeringEbooksPdf.com

## Soil and site

The layers of soil between the bedrock and the foundation level of a building modify the shape and amplitude of the elastic response spectrum, or 'hazard', established at the bedrock level. A soil parameter *S* takes this influence into account so that the Peak Ground Acceleration at the foundation level is equal to $S_{ag}$. Sites are classified as types A, B, C, D, and E described by stratigraphic profiles and parameters. Different values of S are related to these different site types, as indicated in Table 2. The site type has a significant influence on the action applied at the base of a structure since *S* ranges from 1 (rock) to 1,8 (very loose soil). Different values are also attributed to the 'break point' periods $T_B$ and $T_C$ of the spectra corresponding to different sites and soils, as can be seen in Figure 9. It is clear from these graphs that ignoring the soil and site conditions can lead to serious underestimations of the design forces.

## Ductility of the structure

If a structure submitted to an earthquake is able to deform plastically and cyclically without loss of resistance, it is said to be 'ductile'.

As explained in Section 2 and expressed by Figure 3, ductility is a positive attribute for the economy of the project, because:

- the structure can undergo the same displacements as a structure which would remain elastic, but with smaller sections for the structural elements
- forces applied to the foundations are reduced.

The ability to deform plastically without loss of resistance is taken into account by attributing to structures a 'force reduction' or 'behaviour' factor, *q* in Eurocode 8. This factor reduces the elastic spectrum $S_e(T)$ into a design spectrum $S_d(T)$. The value of q ranges from a minimum 1,5 (low dissipation) up to 6 or more (high dissipation). The merit of using this behavioural factor is that the ability of a structure to deform in the plastic range is taken into account in a purely elastic analysis of the structure under $S_d(T)$. More detailed explanations of behaviour factors are given in Section 5.

**Table 2**
Eurocode 8 values of parameters S, $T_B$, $T_C$ and $T_D$ defining the elastic response spectra Type 1 and Type 2.

| | Type 1 Earthquake | | | | Type 2 Earthquake | | | |
|---|---|---|---|---|---|---|---|---|
| **Soil** | **S** | **$T_B(s)$** | **$T_C(s)$** | **$T_D(s)$** | **S** | **$T_B(s)$** | **$T_C(s)$** | **$T_D(s)$** |
| A Rock or rock-like formation, including at most 5 m of weaker material at the surface. | 1,0 | 0,15 | 0,4 | 2,0 | 1,0 | 0,05 | 0,25 | 1,2 |
| B Deposits of very dense sand, gravel, or very stiff clay, several tens of metres in thickness, gradual increase of mechanical properties with depth. | 1,2 | 0,15 | 0,5 | 2,0 | 1,35 | 0,05 | 0,25 | 1,2 |
| C Deep deposits of dense or medium-dense sand, gravel or stiff clay with thickness from several tens to many hundreds of metres. | 1,15 | 0,20 | 0,6 | 2,0 | 1,5 | 0,10 | 0,25 | 1,2 |
| D Deposits of loose-to-medium cohesionless soil or of predominantly soft-to-firm cohesive soil. | 1,35 | 0,20 | 0,8 | 2,0 | 1,8 | 0,10 | 0,30 | 1,2 |
| E A surface alluvium layer of soil similar to C or D with thickness varying between about 5 m and 20 m, underlain by stiffer material | 1,4 | 0,15 | 0,5 | 2,0 | 1,6 | 0,05 | 0,25 | 1,2 |
| $S_1$ Deposits consisting, or containing a layer at least 10 m thick, of soft clays/silts with a high plasticity index (PI > 40) and high water content | Special studies | | | | | | | |
| $S_2$ Deposits of liquefiable soils, of sensitive clays, or any other soil profile not included in types A – E or S1 | Special studies | | | | | | | |

www.EngineeringEbooksPdf.com

## Example of Design Spectra

When considering the factors listed above, a family of design spectra $S_d(T)$ is derived from one elastic response spectrum $S_e(T)$. $S_e(T)$ is a function of $a_{gR}$, $\gamma_I$ and $T$. $S_d(T)$ is a function of $S_e(T)$, q and the site and soil conditions. The expressions defining the Eurocode 8 design spectra $S_d(T)$ are given in Annex A. Figure 10 shows examples of the design spectra in a seismic area where $a_g = 2\ m/s^2$ and earthquakes of Type 1 define the seismic hazard, for structures characterised by $q=1,5$ built on soil types A and C and for structures characterised by $q=4$ built on soil Type C.

**Figure 10**
Top. Examples of design spectra for different sites and behaviour factors q.
Bottom. Periods (T) of structures related to height $H$ (estimated by $T=C_tH^{3/4}$ from Table 6).

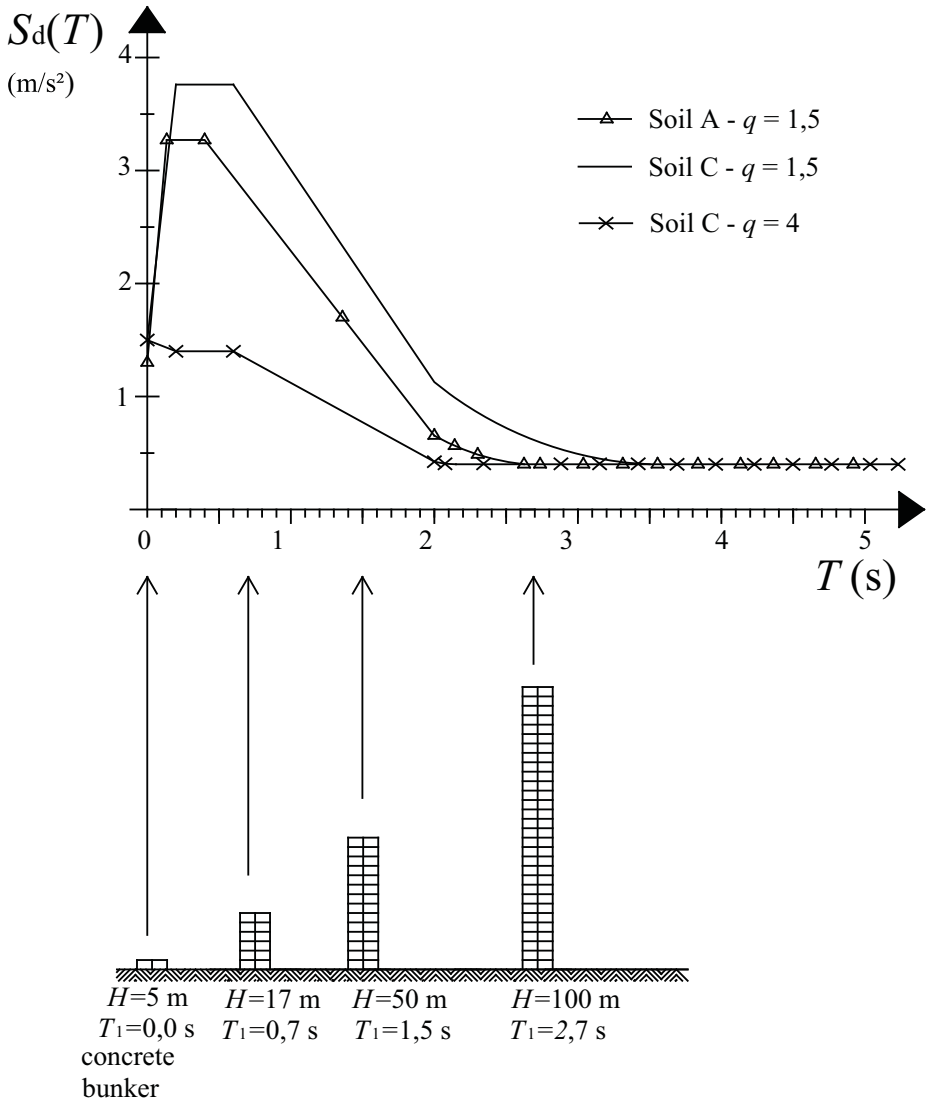




www.EngineeringEbooksPdf.com

# 5. CHARACTERISATION OF STRUCTURES SPECIFIC TO SEISMIC DESIGN

Behaviour factors.
Ductility Classes.
Plastic redistribution parameter.

www.EngineeringEbooksPdf.com

## Behaviour factors

As explained in Section 3, a behaviour factor reflects the capacity of a structure to deform plastically. The energy dissipated in plastic mechanisms can contribute significantly to the energy absorption in a structure submitted to an earthquake. The total earthquake input energy $E_{input}$ is absorbed in different ways by a structure; elastic deformation energy $E_{ELdef}$, kinetic energy $E_{kin}$, viscous energy $E_{viscous}$ and plastic deformation energy $E_{EPdef}$:

$$E_{input} = E_{kin} + E_{viscous} + E_{ELdef} + E_{EPdef}$$

$E_{EPdef}$ corresponds to energy permanently absorbed by the system and can be substantially more important than the other terms, as it can be shown by comparing the behaviour of two cantilevers submitted to cyclic displacements between $+d_{max}$ and $-d_{max}$.

The first cantilever deforms elastically and its behaviour is represented by the *EL* line in the $M - \theta$ diagram of Figure 11. At a displacement $+d_{max}$, the base moment $M_A$ reaches $M_A = M_{EL}$. The energy of elastic deformation $E_{ELdef}$ is represented by the triangle with vertical lines in the graph and is equal to: $E_{ELdef} = 0{,}5\ M_{EL}\ \theta_{max}$. That energy is never dissipated into the structure; when the structure is displaced back to $d = 0$, the energy of elastic deformation $E_{ELdef}$ of the system is equal to 0. The second cantilever is charaterised by a plastic moment $M_{EP} = 0{,}5\ M_{EL}$. That plastic moment $M_{EP}$ is obtained at the base A of the cantilever for $\theta = \theta_y = \theta_{max}/2$ and a plastic hinge is formed. The displacement $d_{max}$ is reached after elastic and plastic deformations. If an earthquake induces cyclic displacements from $+d_{max}$ to - dmax which is the effect represented by the curve *EP* at Figure 11, the energy $E_{EPdef}$ permanently dissipated into the system in one cycle ($+d_{max}$, $-d_{max}$) is represented by the area marked with horizontal lines at Figure 11 and it is equal to: $E_{EPdef} = 2\ E_{ELdef}$. An earthquake generally induces several large cycles and, for instance, 4 cycles from $+d_{max}$ to $-d_{max}$, correspond to a total energy: $E_{EPdef} = 8\ E_{ELdef}$. This shows that the energy absorbed in alternate plastic deformations in the cantilever with a plastic resistance $M_{EP}$ is largely greater than the maximum elastic deformation energy in a 2 times more resistant cantilever. The conclusion is that the required section for the *EP* cantilever can be much smaller than the one needed to withstand elastically $M_{EL}$, provided that the ductility $\theta_{max}/\theta_y$ of the elastoplastic cantilever is greater than 2. This should not present a problem when adequate structural steel is used.

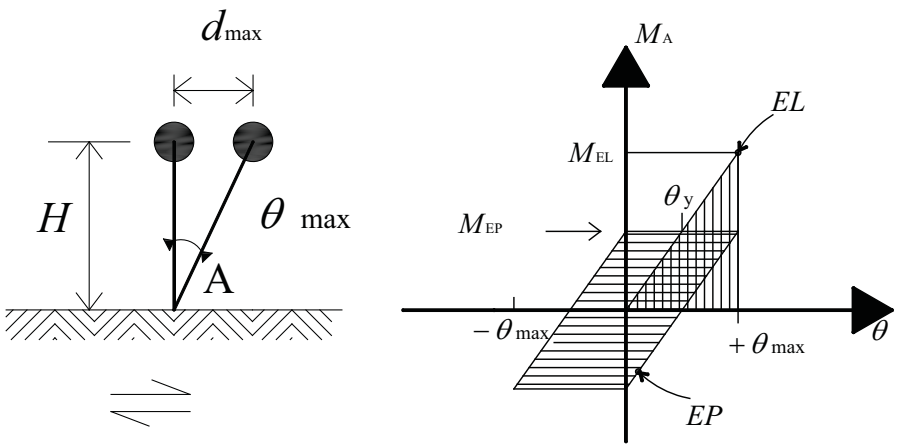


**Figure 11**
Comparison of elastic *EL* and elasto-plastic *EP* behaviour.



www.EngineeringEbooksPdf.com

It is possible to achieve very dissipative steel structures if they are designed to form numerous and reliable energy dissipative zones. Reliability of the dissipative zones results from compliance with a certain number of design conditions, amongst which is 'capacity design' as explained in Section 8. Numerous dissipative zones will form in well designed types of earthquake resisting structures.

All seismic codes characterise the ability of structures to dissipate energy through plastic mechanisms by means of a factor. This is the 'force reduction factor $R$' in AISC documents, and the 'behaviour factor $q$' in Eurocode 8. These factors are high for dissipative structures (see Figure 12).

The behaviour factor q is an approximation of the ratio of the seismic forces $F_{EL}$ that the structure would experience if its response was completely elastic, to the seismic forces $F_{EP}$ that may be used in the design (with a conventional elastic analysis model) to still ensure a satisfactory response of the structure. The design seismic action is thus reduced in comparison to the one that would need to be considered in the analysis of a structure designed to sustain the seismic action in a purely elastic manner.

The values of q associated to a typology of structure reflect its potential to form numerous dissipative zones (see Figure 12).

Estimating behaviour factors is a complex problem which can however be resolved by adopting sophisticated approaches. A simple, although approximate, evaluation can be made in the example of Figure 11. If $q = M_E / M_{EP} = 2$ is used, the ordinates of the "design response spectrum $S_d(T)$" used to analyse the ductile cantilever in an elastic analysis are equal to 1/2 of the ordinates of the elastic acceleration response spectrum $S_e(T)$, and the action effect $M$ found in the cantilever is $M = M_E / 2$. If the section of the cantilever is designed such that its design resistance $M_{Rd} \geq M_E / 2$, then it can withstand the earthquake, provided its ductility is 2 or more. This shows exactly the meaning of the behaviour factor q of Eurocode 8.

In practical terms, the resultant design shear $F_{EP}$ applied to a structure is derived from an elastic resultant shear $F_{EL} = F_{max}$ using: $F_{EP} = F_{EL} / q$ (Note: only valid in the range $T > T_B$, as from $T_B$, the influence of $q$ decreases down to $q$=1 at $T = 0$).

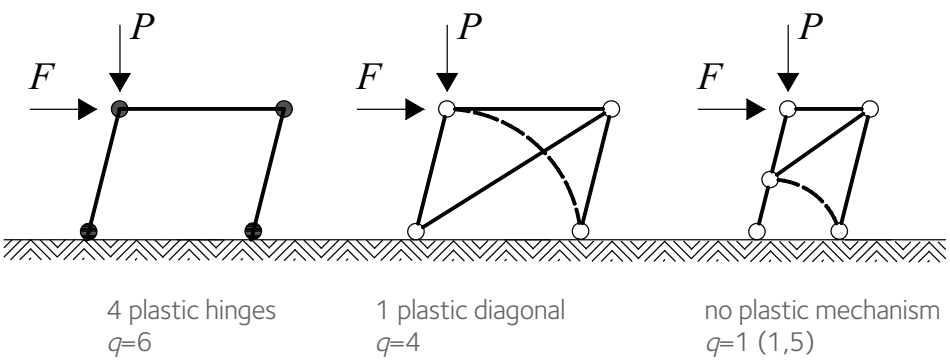


**Figure 12**
Behaviour factor q reflects the energy dissipation potential of a structural type.

* Stability of a K bracing depends on slender diagonal in compression, which fails in a brittle way.

www.EngineeringEbooksPdf.com

The maximum values of q for design to Eurocode 8 are given in Table 3. These values depend on the Ductility Class DC chosen for a given design, and are influenced by the plastic redistribution parameter $\alpha_u/\alpha_1$ which characterises the structural typology. Ductility classes and $\alpha_u/\alpha_1$ are defined hereafter. A designer is free to choose values of $q$ lower than those indicated in Table 3.

## Ductility classes

At the outset of a project, the designer can choose to design structures 'as usual' (non dissipative) or to design 'dissipative' structures. All modern seismic design codes, for instance [1] [7] [8] [13], leave the choice between these two concepts open and define several 'Ductility Classes'. In Eurocode 8 there are three Ductility Classes, namely DCL (Low Ductility, non dissipative structures), DCM (Medium Ductility) and DCH (High Ductility).

Designing a structure to be class DCL means taking into consideration the highest design forces, but only performing the usual static design checks (for example using Eurocode 3). Designing for class DCH the highest possible behaviour factor q is considered, and this approach results in the smallest possible design earthquake actions and seismic action effects. This means that the bending moments etc are reduced, often significantly, in comparison to those considered in the design of a non dissipative structure (note this is not the case for the displacements, see Section 6). However, choosing a higher Ductility Class also means complying with certain other requirements (Eurocode 8). One of these requirements is the class of section required for the dissipative structural elements, which is related to q as indicated in Table 4. Guidance on the selection of an appropriate Ductility Class for design is given in Section 8.

**Table 3**
Behaviour factors $q$ (maximum values)

| STRUCTURAL TYPE | Ductility Class | | |
|---|---|---|---|
| | DCL | DCM | DCH |
| Moment resisting frames (MRF) | 1,5 (2*) | 4 | $5\alpha_u/\alpha_1$ |
| Concentric diagonal bracings<br>Concentric V-bracings | 1,5 (2*) | 4<br>2 | 4<br>2,5 |
| Eccentric bracings | 1,5 (2*) | 4 | $5\alpha_u/\alpha_1$ |
| Inverted pendulum | 1,5 (2*) | 2 | $2\alpha_u/\alpha_1$ |
| MRF with concentric bracing | 1,5 (2*) | 4 | $4\alpha_u/\alpha_1$ |
| MRF with unconnected concrete or masonry infills in contact with the frame<br>MRF with infills isolated from the frame | 1,5 (2*) | 2<br>4 | 2<br>$5\ \alpha_u/\alpha_1$ |

* the National Annex can allow $q = 2$ in class DCL

**Table 4**
Design concepts, Ductility Classes and reference values of the behaviour factor $q$.

| Design Concepts for Structural Behaviour | Ductility Class | Reference behaviour factor q | Required cross-sectional class for dissipative elements |
|---|---|---|---|
| Non dissipative | DCL or Low Ductility | $q \leq 1,5$ | No requirement |
| Non dissipative | DCL or Low Ductility | $1,5 < q \leq 2$ | Class 1, 2 or 3 |
| Dissipative | DCM or Medium Ductility | $2 < q \leq 4$ | Class 1 or 2 |
| Dissipative | DCH or High Ductility | $q > 4$ | Class 1 |



www.EngineeringEbooksPdf.com

## Plastic redistribution parameter $\alpha_u/\alpha_1$

The parameter $\alpha_1$ is the multiplier of the horizontal seismic design action needed to reach the plastic resistance in one part of the structure. $\alpha_u$ is the multiplier of the horizontal seismic design action needed to form a global mechanism. $\alpha_u/\alpha_1$ may be obtained from nonlinear static 'pushover' global analysis, but is limited to 1,6 . Values of $\alpha_u/\alpha_1$ taken from Eurocode 8 are provided in Figure 13.

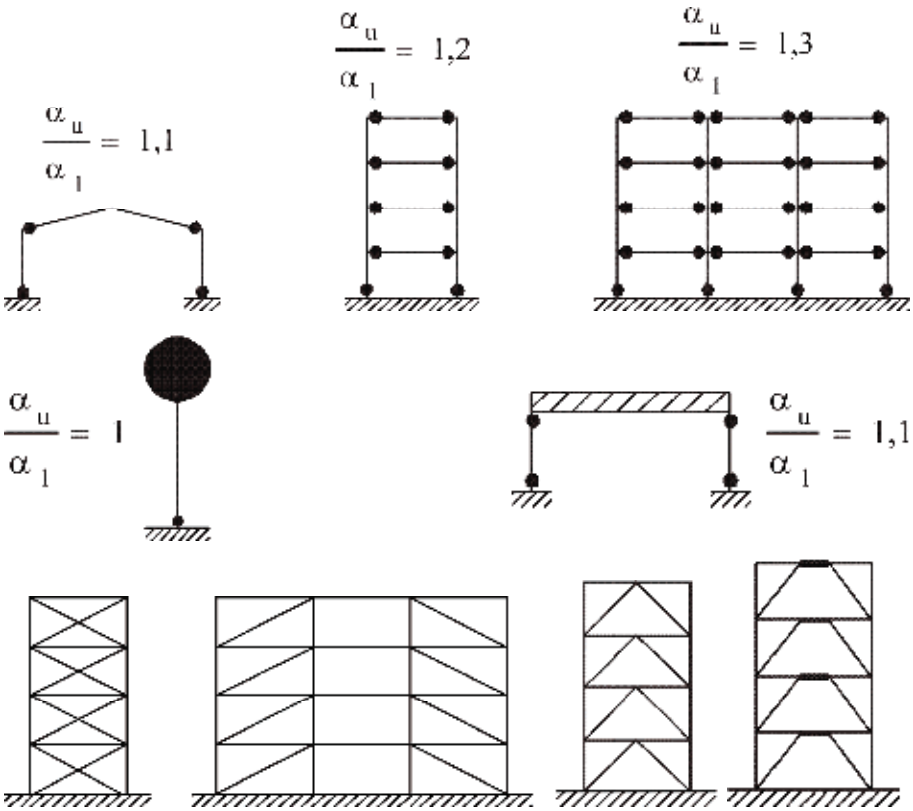


X or V concentric bracings and eccentric bracings designed to Eurocode 8: $\alpha_u/\alpha_1 = 1,2$

**Figure 13**
Location of dissipative zones defined as a design objective in order to form global plastic mechanisms, and associated standard values of parameter $\alpha_u/\alpha_1$ (from Eurocode 8)

www.EngineeringEbooksPdf.com

# 6. ASPECTS OF SEISMIC ANALYSIS AND DESIGN CHECKS COMMON TO ALL STRUCTURAL TYPES

Seismic mass.
Methods of analysis.
Torsion.
Displacements in dissipative structures.
Resistance condition.
Limitation of second order effects.



www.EngineeringEbooksPdf.com

## Seismic mass

As the periods $T$ are function of the masses $M$, a correct evaluation of the masses present in a structure at the time of the earthquake is necessary. A 'seismic mass' is defined, based on a weight $W$ calculated as:

$$W = \sum G_{k,j} + \sum \psi_{E,i} \cdot Q_{ki}$$

The coefficient $\psi_{E,i}$ is used to estimate a likely value of service loads and to take into account that some masses do not follow perfectly the moves of the structure, because they are not rigidly connected to the structure. $\psi_{E,i}$ is computed as:

$$\psi_E = \varphi . \ \psi_{2,i} = 0{,}5 \text{x} 0{,}3 = 0{,}15$$

Values of $\psi_{2,i}$ and $\varphi$ are listed at Table 5. It can be noticed that the coefficient $\psi_{E,i}$ which is used to define the mass of the service load present on average over the building height can be much lower than 1. For example, in an office buildings in which all levels are occupied independently:

The seismic mass is used to determine:

- the global effects due to an earthquake at a given level of the structure, in particular at the foundations
- the forces $P_{tot}$ and $V_{tot}$ used in the verification of limitation of second order effects
- the seismic action effects $A_{Ed}$ generated in the structural elements by the earthquake; for the resistance checks of these elements values of $A_{Ed}$ are combined to the other action's effects in order to establish the design value of the action effect $E_d$:

$$E_d = \sum G_{k,j} \text{« + » } P \text{« + » } \sum_{2i} Q_{ki} \text{« + » } A_{Ed}$$

| Specific use | $\Psi_{2,i}$ | Storey | $\varphi$ |
|---|---|---|---|
| Cat.A : residence | 0,3 | Roof | 1,0 |
| Cat.B : office | 0,3 | Storeys with correlated occupancies | 0,8 |
| Cat.C: meeting rooms, places where people congregate | 0,6 | Independently occupied storeys | 0,5 |
| Cat.D : shopping area | 0,6 | | 1,0 |
| Cat.E : storage, accumulation of goods | 0,8 | | |
| Cat. F : traffic (vehicle≤30 kN) | 0,6 | | |

**Table 5**
Coefficients $\Psi_{2,i}$ et $\varphi$.

www.EngineeringEbooksPdf.com

## Methods of analysis

Several methods can be used to analyse the response of a structure subjected to an earthquake. The choice of method depends on the structure and on the objectives of the analysis.

1) The standard method used in design is the modal response using a design spectrum. This is a linear method in which the inelastic behaviour is considered in the definition of the design spectrum, through the use of a behaviour factor. This method is applicable to all types of buildings, be they regular or irregular in plan and/or elevation.

2) The 'lateral force' method is a simplified version of the modal response method and is a static analysis which can only be employed for regular structures which respond essentially in one single mode of vibration. Similarly to the 'equivalent' force $F$ applied to the mass $m$ of the simple cantilever, it is possible to define in multi-storey buildings a set of 'storey' forces $F_i$, which are applied at each storey level and which induce the same deformed shape as the earthquake. Details are given in Section 7 (Approximate method for seismic analysis and design).The modal response method and the lateral force method of analysis can be applied to planar models of the structure, depending on certain regularity criteria (see Table 6).

3) The 'Pushover' analysis is a non-linear static analysis carried out under constant gravity loads and monotonically increasing horizontal loads. It is applied essentially:
- to verify or revise the overstrength ratio values $\alpha_u/\alpha_1$
- to estimate the expected plastic mechanisms and the distribution of damage
- to assess the structural performance of existing or retrofitted buildings

4) Non-linear time-history analysis is a dynamic analysis obtained through direct numerical integration of the differential equations of motion. The earthquake action is represented by accelerograms (minimum 3). This type of analysis is used for research and code background studies.

| Regularity | Permissible Simplification | | | Behaviour factor |
|---|---|---|---|---|
| Plan | Elevation | Model | Linear-elastic Analysis | $q$ |
| Yes | Yes | 2 planar | Lateral force | Reference value |
| Yes | No | 2 planar | Modal response | Reference value /1,2 |
| Limited | Yes | 2 planar | Lateral force | Reference value |
| No | Yes | 1 model 3D | Lateral force | Reference value |
| No | No | 1 model 3D | Modal response | Reference value /1,2 & reduced $\alpha_u/\alpha_1$ |

**Table 6**
Structural regularity and permissible simplifications in seismic analysis (Eurocode 8).



www.EngineeringEbooksPdf.com

## Torsion

Earthquakes generate torsional movements of structures for three reasons:

- an eccentricity can exist at every storey between the storey's resultant force, which coincides with the mass centre CM of the storey, and the centre of rigidity CR of that storey.
- ground movement has rotation aspects which affect very long structures (several hundred meters)
- even in a symmetrical building, there is an uncertainty on the exact location of the CM and design codes impose consideration in the analysis of an 'accidental' eccentricity equal to 5% of the building length perpendicular to the earthquake direction being considered, in addition to the computed CM-CR distance.

The centre of rigidity CR is the point where the application of a force generates only a translation of the building parallel to that force. The effects of torsion have to be determined based on the CM-CR distance and on the accidental eccentricity in either a + or - sense. In irregular structures, the computation of torsional effects resulting from the non – coincidence of CM and CR can only be done in a 3-D model. The effects of accidental eccentricity can be found applying at every level a torque computed as the product of the storey force by the CM-CR distance. The effects of those two terms of torsion are then "combined", which means that effects of accidental eccentricity have to be considered with + and – signs. In structures symmetrical in plan in which CM and CR have the same position, the effects of accidental eccentricity can be approximated by amplifying the translational action effects by a factor $\delta$:

$$\delta = 1 + 0{,}6 \cdot \frac{x}{L_e}$$

X is the distance in plan between the seismic resisting structure considered and centre of mass CM of the building in plan, measured perpendicularly to the seismic action under consideration, and $L_e$ is the distance between two extreme seismic resisting structures, also measured perpendicularly to the seismic action under consideration. In symmetrical buildings with peripheral resisting structures, $\delta$ is of the order: $\delta = 1{,}3$.

## Displacements in dissipative structures

A modal response considering a design earthquake is a conventional linear analysis in which the action is reduced by a behaviour factor $q$. The displacements found are the elastic part $d_e$ of the real elasto-plastic displacements (Figure 14). Given that the definition of behaviour factors is based on the hypothesis of equal displacements in the real (elasto-plastic) structure and in the reference elastic structure (Figures 11 and 14), real displacements ds are found by simply multiplying values of de by $q$: $d_s = q\, d_e$.

**Figure 14**
Computation of real displacement $d_s$.

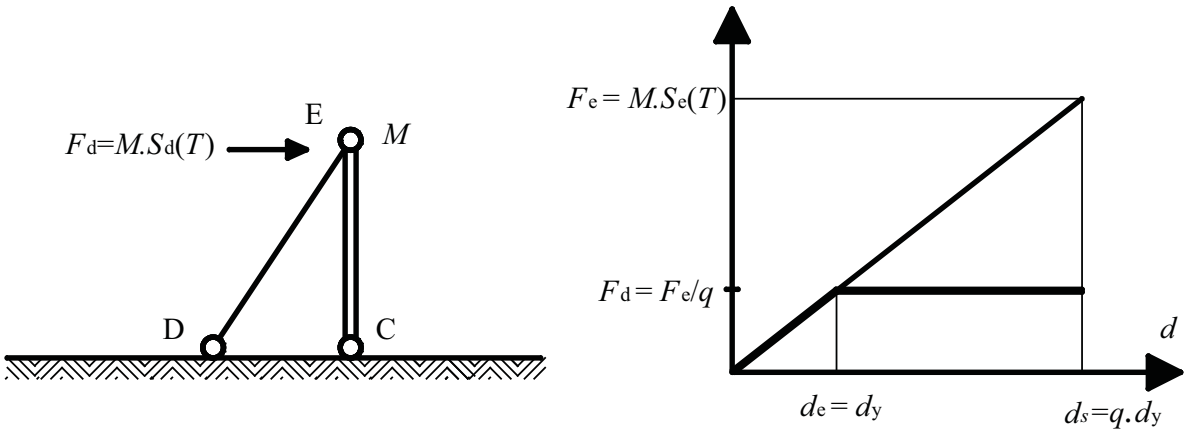


$d_e$: elastic displacement from the elastic analysis under response spectrum, reduced by $q$ factor
$d_s$: real displacement

www.EngineeringEbooksPdf.com

## Resistance condition

The resistance condition for all structural elements including connections is:

$$E_d \leq R_d$$

$R_d$ is the design resistance of the element, and $E_d$ is the design value of the action effect due to the seismic design situation:

$$E_d = \Sigma G_{k,j} \text{ « + » } P \text{ « + » } \Sigma \psi_{2i} \cdot Q_{ki} \text{ « + » } \gamma_1 A_{Ed}$$

If necessary, second order effects are taken into account in the value of $E_d$ (see below), and redistribution of bending moments is permitted.

## Limitation of second order effects

The uncertainties of seismic design require the limitation of second order (or P-Δ) effects. In Eurocode 8, second order moments $P_{tot}\, d_r$ are compared to the first order moments $V_{tot}\, h$ at every storey. $P_{tot}$ is the total gravity load at and above the storey, determined considering the seismic mass

$$\Sigma G_{k\,j} \text{ "+" } \Sigma \psi_{E\,i} \cdot Q_{k\,i}$$

$d_r$ is the difference in lateral displacements (drift) $d_s$ at the top and bottom of the storey under consideration ($d_s = q\, d_e$). $V_{tot}$ is the total seismic shear at the storey under consideration (which is the sum of all the storey forces at and above the level under consideration), and h is the storey height (see Figure 15).

If $\theta = \dfrac{P_{tot} \cdot d_r}{V_{tot} \cdot h} \leq 0{,}10$

then $P$-$\Delta$ effects are assumed to be negligible. If $0{,}1 < \theta \leq 0{,}2$ then the second order effects may be taken into account by multiplying the action effects by $1/(1 - \theta)$, noting that $\theta$ should never exceed 0,3. Checking this at every storey mitigates the risk of a 'soft storey' (see Section 8).

**Figure 15**
Parameters used in the control of 2nd order effects.

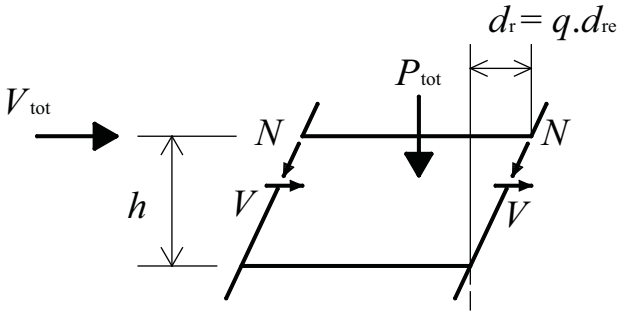


$$P_{tot} = \Sigma\, N_{gravity}$$
$$V_{tot} = \Sigma\, V_{seismic}$$



www.EngineeringEbooksPdf.com

# 7. APPROXIMATE METHOD FOR SEISMIC ANALYSIS AND DESIGN

Choice of units.
Simple elastic analysis method.
Estimation of the fundamental period T1 of a building.

www.EngineeringEbooksPdf.com

## Choice of units

The units used in a dynamic analysis must belong to a coherent system of physical units to void errors that can easily be of the order of 1000%! For instance using the International System of Units, masses are defined in kg (not in kN), forces in N, lengths in m, Young's modulus in N/m$^2$ and time (periods $T_1$) in s.

## Static elastic analysis or the 'lateral force' method

A structure that is regular in both plan and elevation, in which the masses are regularly distributed and in which stiff horizontal diaphragms are present can be modelled by means of two planar models; one in the x direction, the other in the y direction. Each model represents one of the n resisting frames parallel to the direction of the earthquake being considered. The seismic mass $m$ allocated to that frame is $1/n$ of the total seismic mass of the building. For the regular structure described above, the contribution of vibration modes higher than the fundamental one is negligible and the structure responds like a vertical cantilever of period $T_1$. The fundamental period $T_1$ can be assessed by considering the physical relationships of single degree of freedom systems, or 'statistical' relationships deduced from the analysis of many existing designs (see Table 7).

The resultant seismic horizontal force $F_b$, can be evaluated as:

$$F_b = S_d(T_1) \cdot m \cdot \lambda$$

m is the seismic mass allocated to the analysed frame; $S_d(T)$ is the design spectrum (see Section 4). The factor $\lambda$ expresses the fact that part of the mass of the structure vibrates into local modes and does not contribute to the mass involved in global modes. Example: a vertical mode of vibration of a floor in a structure submitted to the horizontal component of the earthquake. Taking the total mass into consideration would be penalising in the evaluation of the global shear $F_b$ and one considers $\lambda = 0{,}85$.

Based on the above, a 'lateral force method' can be applied to the earthquake action and to the analysis of the action effects on the structure. Such a method comprises steps S1 to S7 as described below:

S1: evaluate the period $T_1$ of the fundamental vibration mode using an expression from Table 7.

S2: read the design pseudo acceleration $S_d(T_1)$ from the design spectrum

S3: compute the seismic resultant design base shear $F_b$:

$\lambda = 0{,}85$; m is the seismic mass allocated to the frame being considered; $S_d(T)$ is a design spectrum (spectrum reduced by a behaviour factor q selected by the designer, see Section 5). As noted above, care is needed to ensure current use of units for $m$, $F_b$, and $S_d(T_1)$



www.EngineeringEbooksPdf.com

S4: distribute $F_b$ over the height of the structure into a number of 'storey forces'
S5: establish internal forces and displacements of the structure under the force $F_b$, by using a static analysis
S6: combine those seismic action effects to other action effects (gravity loading in the seismic situation, etc)
S7: carry out all seismic checks required for the structural elements and connections, with consideration of $P$-$\Delta$ effects etc. (See Sections 6 and 10 to 14).

Steps S5, S6 and S7 can only be carried out once the dimensions of the structural elements are defined.

The storey forces $F_i$ are related to the accelerations that each storey in the structure undergoes. The accelerations increase with height and are distributed in accordance with the deformed shape of the structure; if this shape is approximated by a triangle (See Figure 16) then the horizontal storey force $F_i$ at each storey i situated at a level $z_i$ above ground is:

$$F_i = F_b \cdot \frac{z_i \cdot m_i}{\Sigma\, z_j \cdot m_j}$$

In this expression $m_i$, $m_j$ are the storey seismic masses. If all the storey seismic masses are equal:

$$F_i = F_b \cdot \frac{z_i}{\Sigma\, z_j}$$

N = 4 storeys

Running this type of analysis requires a first guess of the 'sizes' of the structural components, namely the beams and columns. The analysis then provides all the action effects; bending moments, shear, displacement $d_e$. This means that all the design checks can be made; resistance of structural elements, limitation of displacements and of $P$-$\Delta$ effects etc.

Provided that the structure falls within the limits of compliance of the regularity criteria, then the 'lateral force method' is one of the analyses accepted by seismic codes.

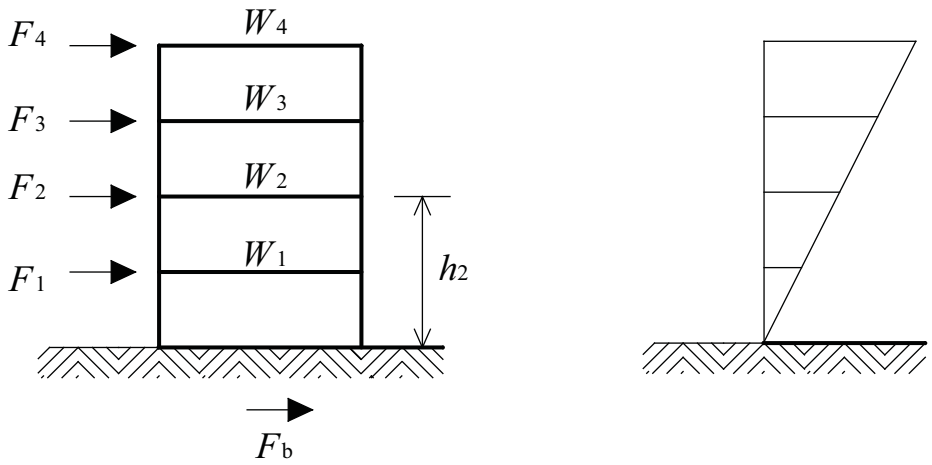


**Figure 16**
Lateral force method.

www.EngineeringEbooksPdf.com

## Estimation of the fundamental period $T_1$ of a building

For structures that can be 'represented' by a simple cantilever, the use of physical (exact) formulae is possible because their structural form corresponds well to the hypotheses behind these formulae. For more complicated structures, 'statistical' studies have defined empirical relationships between the height of the structure, the form of the structural system and its fundamental period $T_1$ (see Table 7). Figure 10 shows the relationship between building height $H$ and period $T_1$ as deduced from Table 7 for a steel moment frame. Designers should of course not forget that these are only approximate relationships.

One safe-sided approach consists of considering for $S_d$ the ordinate of the horizontal plateau of the response spectrum $S_d(T_B) = S_d(T_C)$, which is an upper bound value for most structures. Such an approach may result in earthquake effects and therefore the sizes of structural elements being somewhat overestimated, but this may be preferred as a first design approach.

**Table 7**
Formulae for the estimation of the fundamental period $T_1$ of a building.

| Period $T_1$ | Reference structure |
|---|---|
| $T_1 = 2\pi\sqrt{\dfrac{MH^3}{3EI}}$ | Exact formula for Single Degree of Freedom Oscillator. Mass $M$ lumped at top of a vertical cantilever of height $H$. Cantilever mass $M_B = 0$ |
| $T_1 = 2\pi\sqrt{\dfrac{0{,}24 M_B H^3}{3EI}}$ | Exact formula for Single Degree of Freedom Oscillator. Vertical cantilever of height $H$ and of total mass $M_B$ |
| $T_1 = 2\pi\sqrt{\dfrac{(M + 0{,}24 M_B)H^3}{3EI}}$ | Exact formula for Single Degree of Freedom Oscillator. Mass $M$ lumped at top of a vertical cantilever of height $H$ and of total mass $M_B$. |
| $T_1 = C_t \cdot H^{3/4}$<br>$H$ building height in m measured from foundation or top of rigid basement. | Approximate Relationship (Eurocode 8).<br>$C_t = 0{,}085$ for moment resisting steel space frames<br>$C_t = 0{,}075$ for eccentrically braced steel frames<br>$C_t = 0{,}050$ for all other structures |
| $T_1 = 2 \cdot \sqrt{d}$ | Approximate Relationship (Eurocode 8).<br>$d$: elastic horizontal displacement of top of building in $m$ under gravity loads applied horizontally. |



www.EngineeringEbooksPdf.com

# 8. ARCHITECTURE OF EARTHQUAKE RESISTANT BUILDINGS

Basic features of an earthquake resistant building.

Primary structure and secondary structure.

Objectives of conceptual design.

Principles of conceptual design of an earthquake resistant structure.

www.EngineeringEbooksPdf.com

## Basic features of an earthquake resistant building

All buildings are 'boxes' and when subjected to earthquakes they work in the way sketched in Figure 17. Stiff and resistant horizontal structures, called diaphragms, allow the horizontal forces at each storey to be distributed into the vertical resisting structures; their connections to the vertical frames must be designed to carry the storey forces. Vertical resisting structures in the x and y directions attract the horizontal storey forces and transmit them to the foundations.

**Figure 17**
How structures work as 'boxes' (from reference [18])

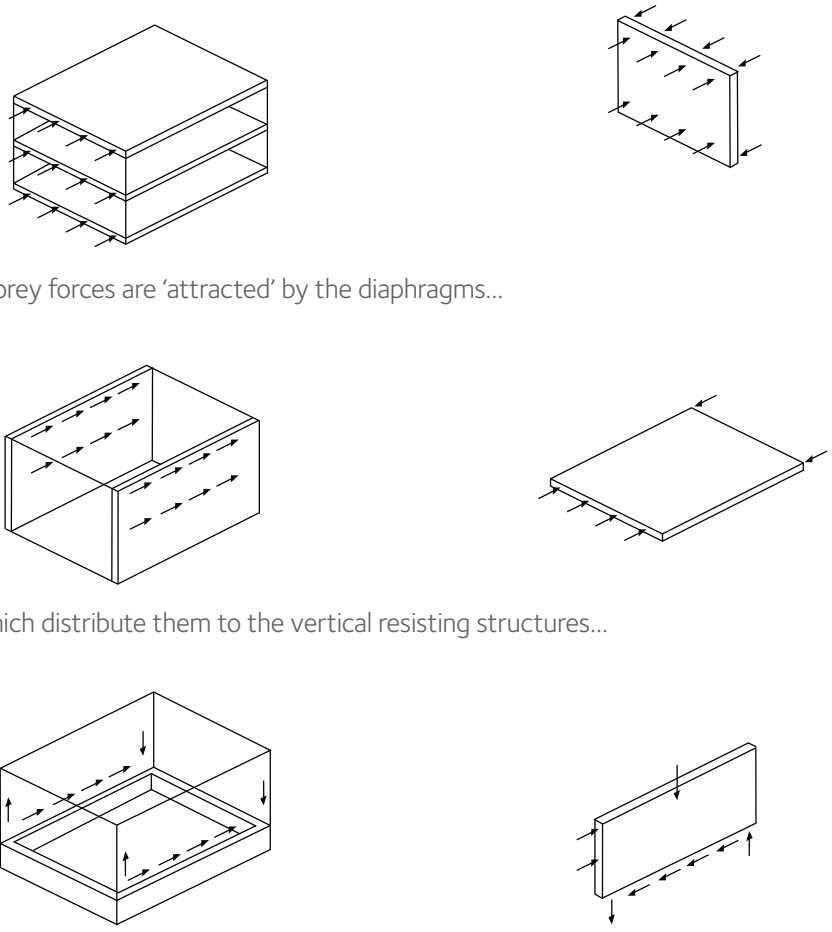

Storey forces are 'attracted' by the diaphragms...

which distribute them to the vertical resisting structures...

which transfer the forces down to the foundations.



www.EngineeringEbooksPdf.com

## Primary structure – Secondary structure

The vertical load resisting structure may comprise a main or 'primary' system designed to carry the total earthquake effects, and a 'secondary' structure which is designed to carry only gravity loads (see Figure 18). The physical reality of the frame must reflect this distinction; the contribution to lateral stiffness and resistance of the secondary structure should not exceed 15% of that of the primary structure. Furthermore, the members of the secondary structure and their connections must be able to accommodate the displacements of the primary structure responding to an earthquake, whilst remaining capable of carrying the gravity loading.

## Objective of conceptual design

A good conceptual design will enable the development of a structural system to resist earthquakes that has low additional costs in comparison to a non-seismic design. The principles of this conceptual design only apply to the 'primary' resisting system (as this alone resists earthquakes), allowing much more architectural freedom in the form of the building. In particular, there will be almost total freedom in the design of the 'secondary' structure, which may be the more important for the exterior aspects of the building.

**Figure 18**
Primary and secondary structures.

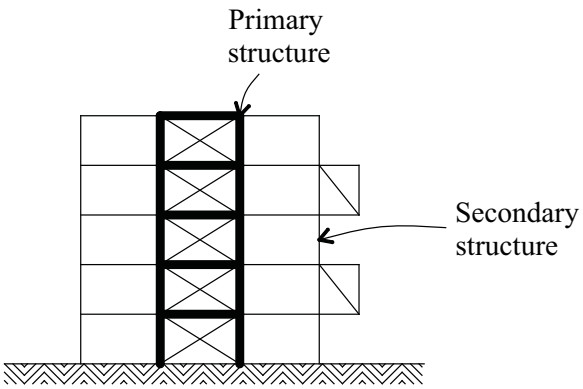


www.EngineeringEbooksPdf.com

## Principles of conceptual design of earthquake resistant structures

The guiding principles governing conceptual design for resistance to earthquakes are; structural simplicity, uniformity, symmetry, redundancy, bi-directional resistance and stiffness (torsional resistance and stiffness), use of strong and stiff diaphragms at storey levels, and use of adequate foundations.

**Structural simplicity** is characterised by the presence of clear and direct paths for the transmission of the seismic forces. It is an important principle, because the modelling, analysis, designing, detailing and construction of simple structures are subject to many less uncertainties, so that the prediction of their seismic behaviour structurally is much more reliable.

**Uniformity in plan** is obtained by an even distribution of the structural elements, which allows short and direct transmission of the inertia forces created by the distributed masses of the building. If necessary, uniformity may be realised by subdividing the entire building by seismic joints into dynamically independent units. These joints should be wide enough to prevent pounding of the individual units during a seismic event. If the building configuration is either symmetric or quasi-symmetric, a symmetric layout of vertical structures providing the earthquake resistance is appropriate for the achievement of uniformity. A close relationship between the distribution of masses and the distribution of resistance and stiffness eliminates large eccentricities between mass and stiffness, and minimises the torsional moments applied to the building (see Figure 19).

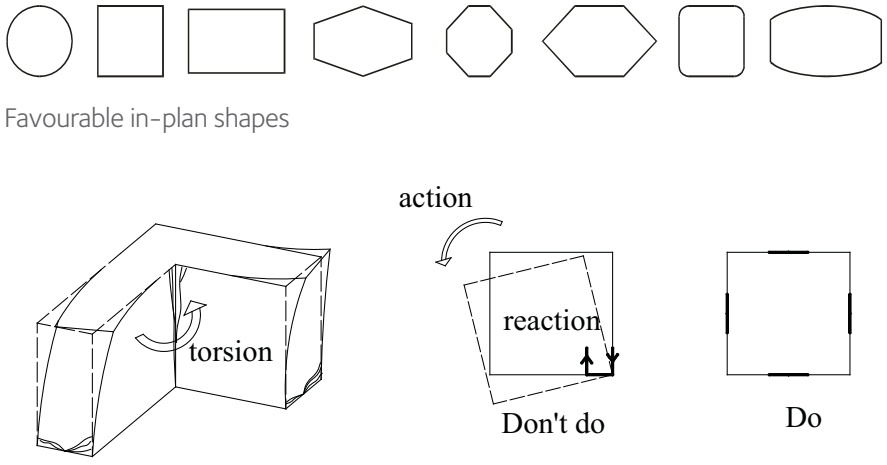


**Figure 19**
Symmetrical in-plan shapes reduce torsion. Structural systems distributed close to the periphery are the most effective at resisting torsion.



www.EngineeringEbooksPdf.com

**Uniformity over the height** of the building avoids the occurrence of sensitive zones where concentrations of stress and large ductility demands might cause premature collapse. Uniformity over the height also requires that non structural elements do not interfere with the structural elements to localise the plastic deformations, such as in the so-called 'soft storey' mechanism (Figure 20).

The use of evenly distributed structural elements increases redundancy and facilitates more redistribution of the action effects and widespread energy dissipation across the entire structure. Its use also spreads the reactions at the foundations (Figure 21).

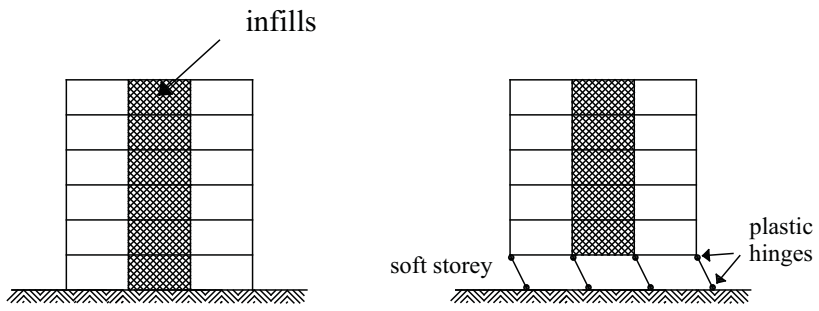


**Figure 20**
Regularity over the height reduces risk of 'soft storey' failure.

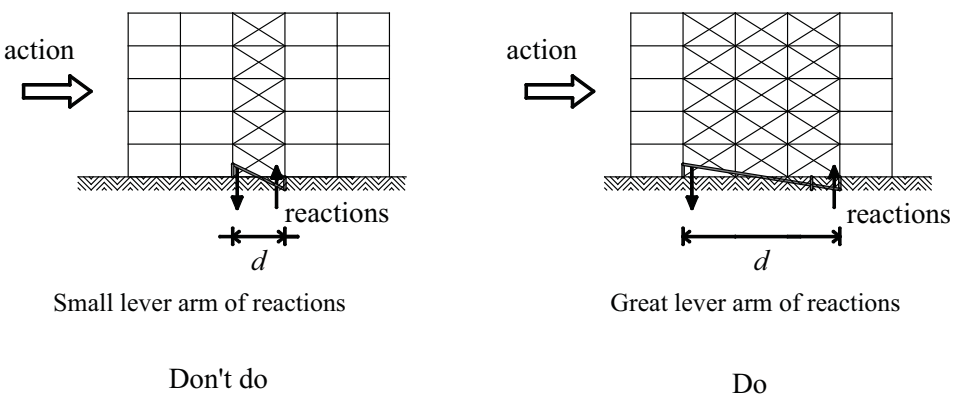


**Figure 21**
Redundancy and wide bases better redistribute the seismic action effects at the foundation level.

www.EngineeringEbooksPdf.com

Horizontal seismic motion is a bi-directional phenomenon and the building structure must be able to resist horizontal actions in any direction. The structural elements should ensure **similar resistance and stiffness in both main directions**. When considering the stiffness of the structure a balance has to be made. The action effects in terms of forces may be reduced in a more flexible structure, as can be directly concluded from the acceleration response spectrum. However, displacements will be greater and the design must prevent excessive displacements that might lead to either instabilities due to second order effects under the design earthquake, or instabilities due to excessive damage (cracks) under more frequent earthquakes.

The building structure should possess adequate **torsional resistance and stiffness** in order to limit torsional movements, which tend to stress the different structural elements in a non-uniform way. Arrangements in which the structural systems resisting the seismic action are distributed close to the periphery of the building are the most effective.

The general importance of **diaphragms** in the resistance of buildings is explained above. The presence of floor and roof diaphragms is especially relevant in cases of complex and non-uniform layouts of the vertical structural systems, or where systems with different horizontal deformation characteristics are used together (for example in dual or mixed systems). Particular care should be taken in cases with very elongated in-plan shapes and large floor openings, especially those located near vertical structural elements.

The **foundations** should ensure that the whole building is subjected to a uniform seismic excitation. They should also be designed to reduce problems in case of differential settlement under seismic action. A rigid, box-type or cellular foundation, containing a foundation slab and a cover slab, achieves this objective. If individual foundation elements like footings or piles are used, they should be tied together by the foundation slab or by tie-beams.



www.EngineeringEbooksPdf.com

# 9. DESIGNING DISSIPATIVE STRUCTURES

Principle.

Designing reliable dissipative zones.

The many local dissipative mechanisms available in steel structures.

Non dissipative local mechanisms.

Design of non dissipative elements in a dissipative structure.

Capacity design applied to connections.

Capacity design applied to bars with holes.

Design criteria for dissipative structures.

Selecting a Ductility Class for design.

Selecting a typology of structure for design.

www.EngineeringEbooksPdf.com

## Design criteria for dissipative structures

The general design objective when considering dissipative structures is to form numerous and reliable dissipative zones. The aimed for global plastic mechanisms for different structural systems will have specific features related to these systems.

The design criteria are also specific to each type of frame, but they encompass the following three generic requirements:

- the resistance $R_d$ of the dissipative zones should be greater than the calculated action effects $E_d$, in order to give enough resistance to the structure: $R_d \geq E_d$
- the ductility of the dissipative zones should be high enough to accommodate the formation of a global plastic mechanism which is stable up to the displacements that will be imposed by the earthquake
- the other structural elements should be designed to remain elastic and stable. This will be achieved by the application of the 'capacity design' method, as explained in this paragraph.
- there should be an homogeneous overstrength of the dissipative zones, to ensure a global plastic mechanism forms rather than a partial one.

Other requirements are formulated for each type of structure, related to the structural elements or connections that are specific to the structure.

In conclusion, the following three 'conditions' must be addressed:

Condition 1: define the intended global plastic mechanism and its dissipative zones.
Condition 2: design and ensure reliable dissipative zones at the selected places.
Condition 3: avoid plastic deformations, brittle failures and/or elastic instabilities at places in the structure other than the dissipative zones.

The global mechanism selected as the overall design objective will depend on the type of structure. They are considered in Sections 10 to 17. Conditions 2 and 3 are more general and are discussed below.

## Designing reliable dissipative zones

Dissipative zones have to be made of a ductile material. If correct structural steel grades are used then the material elongation will be over 15 % and the ductility, defined as $\varepsilon_{y,\,max} / \varepsilon_y$, will be over 15. The adequacy of the steel is related to the properties needed to achieve ductility of the structural elements; a need for high elongation requires $f_u / f_y > 1{,}10$, and other requirements are correct toughness at working temperature (minimum 27 J in a Charpy V notch test) and weldability. In addition to the steel itself, clearly the weld material and bolts must also be adequate. ArcelorMittal steels complying with the necessary requirements are described in Annex B.



www.EngineeringEbooksPdf.com

# The many local dissipative mechanisms possible in steel structures

The design must ensure the development of local plastic mechanisms that are known to be dissipative, and avoid non dissipative, plastic or brittle, mechanisms. This requires the designer to be aware of the dissipative and non dissipative local mechanisms that are possible. Various dissipative and non dissipative local mechanisms possible in steel structures are shown in Figure 22.

Reliable energy dissipation within elements can be achieved by:

- bars yielding in tension, with the design avoiding local stress concentrations or excessive section reductions. The elements must be in pure tension. High strength bolts in tension should not be used as dissipative components, because they are not made of a very ductile material and may be subjected to bending when a connection deforms.
- bars yielding in compression, if premature buckling is prevented. Stocky elements with $\bar{\lambda} < 0{,}2$ can develop plasticity in compression.
- plastic bending, provided flange buckling takes place at large enough deformations. An adequate class of section must be chosen, and plates will bend in order to form yield lines.
- plates yielding in shear, which provide a stable ductile mechanism.

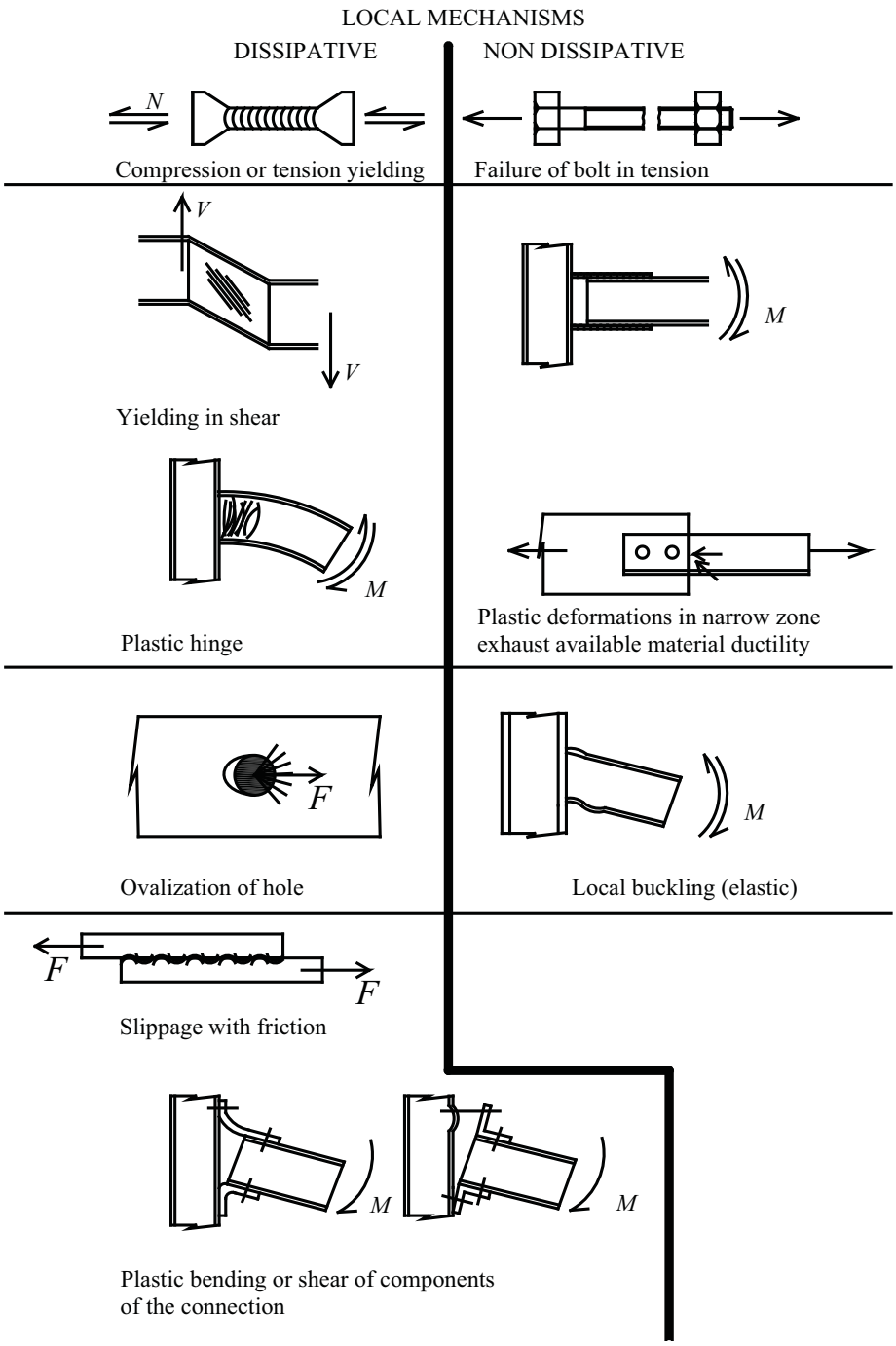


**Figure 22**
Dissipative and non dissipative local plastic mechanisms.

www.EngineeringEbooksPdf.com

- ovalisation of bolt holes. This occurs when local plastic compression strains are applied by bolts to a plate made of ductile structural steel, and is a very stable and ductile mechanism (indeed the opposite of failure of the bolts themselves in shear, or failure of the welds). For bolted shear connections, it is recommended that the design shear resistance of the bolts is more than 1,2 times the design bearing resistance, because even if the bolted connection is designed to be 'non-slip' there is always relative movement between the two assembled plates in an earthquake condition. Bearing resistance will then be the true mode of failure of the bolted connection.
- friction between plates. Friction dissipates energy and prevents destructive shocks in the bolts between loose parts of a connection. For this reason, pre-tensioning of bolts is prescribed for seismic applications.
- in the connections, if they are designed to develop one or more of the dissipative mechanisms listed above.

## Non dissipative local mechanisms

Non dissipative behaviour of potentially dissipative zones can result from:

- premature local or global buckling

plastic strains occurring in a region that is too small (see below); this is a 'localisation of strains' or 'stress concentration' situation. Even when appropriate materials and construction are adopted, a design that generates high elongations over a short zone will result in very low deformation of the component, and these may be below the expectations of the designer and the requirements of the code. This problem is illustrated in Figure 23 for the case of bending applied to a bar either without (Figure 23a) or with cover plates which are not connected to the column (Figure 23b). If the ultimate strain $\varepsilon_u$ of the steel beam is equal to 20 times the yield strain $\varepsilon_y$ ($\varepsilon_y = f_y / E$ and the minimum value of $\varepsilon_u / \varepsilon_y$ prescribed for structural steel in seismic applications is 15), then, for an S355 steel:
$\varepsilon_u = 20\ \varepsilon_y = 20 \times 355/210000 = 3{,}38\ \%$

In the beam without cover plate, yielding of the flange takes place over the length of a plastic hinge, which is of the order of the beam depth, that means equal to 200 mm - Figure 23a. The ultimate elongation of that 200 mm zone is equal to:
$D_{u,a} = 0{,}0338 \times 200 = 6{,}76$ mm
In the beam with a cover plate –Figure 23b, yielding of the flange only take place on a 20 mm length, the rest of the beam remaining elastic due to a significantly greater plastic modulus $W_{pl,Rd}$ in the section reinforced by the cover plates. The ultimate elongation of that 20 mm zone is equal to:
$D_{u,b} = 0{,}0338 \times 20 = 0{,}67$ mm

Those elongations $D_{u,a}$ and $D_{u,b}$ can be translated into ultimate rotation capacity $\theta_u$, as:
$\theta_u = D_u / (d_b / 2)$

Design 'a' corresponds to a plastic rotation capacity $\theta_{u,a} = 6{,}76 / 100 = 67{,}6$ mrad, which is greater than US or European code requirements for dissipative zones in bending(25 to 40 mrad). Design 'b' corresponds to a plastic rotation capacity $\theta_{u,a} = 0{,}676 / 100 = 6{,}76$ mrad, which is far less than US or European code requirements and its failure will be said 'brittle'.

**Figure 23**
Localisation of plastic strains in a small zone leads to low ductility failures.

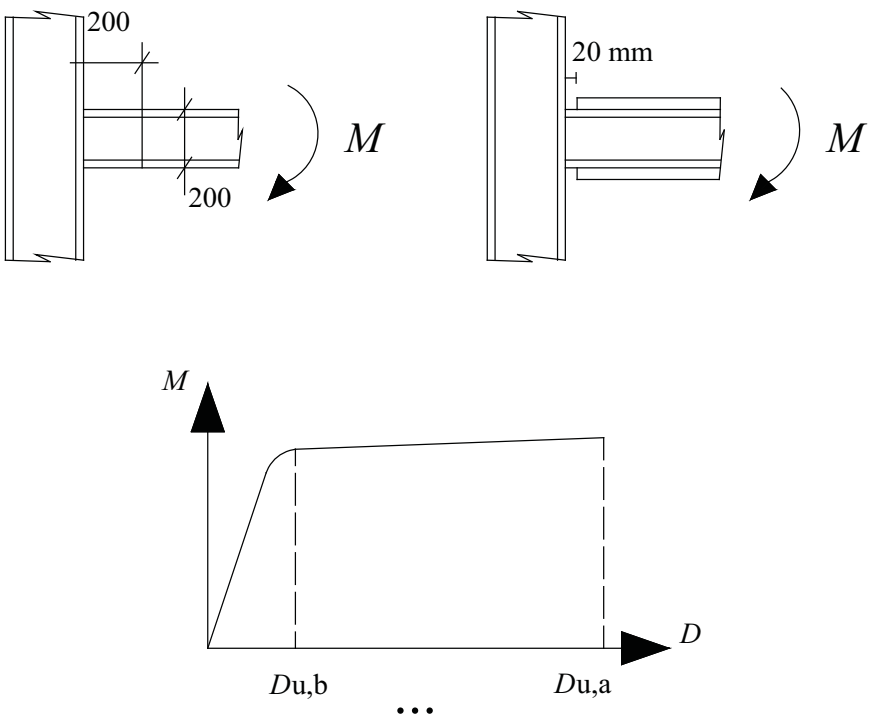




www.EngineeringEbooksPdf.com

## Design of non dissipative elements in a dissipative structure

To avoid plastic deformations, and indeed brittle failures and/or elastic instabilities, at places in the structure other than the dissipative zones the components adjacent to a dissipative mechanism have to be designed so that they have greater resistance than the dissipative mechanism. This will ensure that they remain elastic and stable when overall deformations are taking place. This concept is known as 'capacity design'.

To highlight the concept, the chain shown in Figure 24 is often presented. The strength of a chain is the strength of its weakest link, therefore one ductile link may be used to achieve ductility for the entire chain. The tensile strength of the ductile link is subject to uncertainties of material strength, because real and nominal strengths are different, and because of strain hardening effects at high strains. Whilst the other links are presumed to be brittle, their failure can be prevented if their strength is in excess of the real strength $R_{di}$ of the ductile weak link at the level of ductility envisaged. Figure 24 shows how the minimum resistance required for the brittle links is established using the 'capacity design' principle.

If a standard elastic analysis is adopted for a structure, using a reduced response spectrum, the capacity design involves the following steps:

- The potential dissipative zones are defined as part of a global dissipative mechanism (which is prescribed as a design objective by the code for each type of structure (see Sections 10 to 17)).
- The structure is analysed and the action effects $E_d$ in sections are computed
- In every potential dissipative zone I, the dissipative element is designed such that its resistance $R_{di}$ is greater than the action effect $E_{di}$: $R_{di} \geq E_{di}$
- The J potential failure modes of the elements adjacent to the dissipative mechanism are identified, for example buckling of an adjacent structural element, or failure of bolt in tension.
- The sizes of those adjacent elements are defined such that their resistance $R_{dJ}$ is greater than the plastic resistance of the component intended to be dissipative (the weak link or 'fuse').
- To achieve adequate sizing, $R_{dJ}$ of the J non dissipative elements of dissipative zone i has to be greater than the computed action effects $E_{dJ}$ amplified to take into account the fact that the real action effect in the dissipative element is the plastic resistance $R_{di}$ and not the action effect $E_{di}$ determined from the conventional elastic analysis of the structure. The resistances $R_{dJ}$ of the non dissipative elements should thus comply with:

$$R_{\mathrm{dJ}} > \gamma \cdot \frac{R_{\mathrm{di}}}{E_{\mathrm{di}}} \cdot E_{\mathrm{dJ}} + S_{\mathrm{dj,G}}$$

in which $\gamma$ is a safety factor. In that expression, + means "combined with" in the sense of seeking the realistic worst case situation. $S_{dj,G}$ is the action effect resulting from the other actions included in the seismic combination.

If $E_{\mathrm{dj}} = E_{\mathrm{di}}$ : $R_{\mathrm{dJ}} \geq \gamma \cdot R_{\mathrm{di}} + S_{\mathrm{dj,G}}$

Figure 30 shows the influence of capacity design in the case of a beam to column connection in a moment resisting frame. Figure 45 shows the influence of capacity design in the case of the connection of a diagonal in a concentrically braced frame.

**Figure 24**
Principle of Capacity Design.

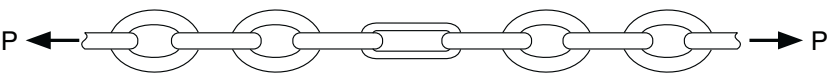


| | ductile link | Other links |
|---|---|---|
| Calculated action effect: ——> | $E_{di}$ | $E_{dj}$ |
| Required resistance: ———> | $R_{di} > E_{di}$ | $\gamma(R_{di} / E_{di})\, E_{dj}$ ($\gamma$ =1,2) |

www.EngineeringEbooksPdf.com

Correct application of the capacity design principle requires:

- the identification of all possible failure modes
- a correct evaluation of the stresses and strains sustained by the various components of the plastic zones; steel sections, welds, bolts, and plates. In this context, an underestimation of the plastic resistance of the dissipative zone reduces safety, because $R_{di} / E_{di}$ is underestimated.
- a correct estimation of the yield strength of the plastic zones and of the adjacent zones. Providing material with excessive yield strength $f_y$ for the dissipative zones may be unsafe.

A correct estimation of the yield strength of the plastic zones is enforced by seismic codes, which compel the designer to evaluate the real plastic resistance by means of a coefficient indicating the ratio between real and nominal (that is 'design') yield strength of the steel; $\gamma_{ov}$ in Eurocode 8, $R_y$ in US or Canadian codes. As an indicative value, $\gamma_{ov} = 1{,}25$ from Eurocode 8 means that the estimation is: $R_{d,real} = 1{,}25\ R_{d,nominal}$

A strict application of capacity design is essential to ensure the reliability of dissipative structures in seismic areas. Many design rules related to specific structures are direct consequences of this principle. Some rules, like those explained in the following two paragraphs, are of a more general nature.

## Capacity design applied to connections

The design rule for rigid full strength connections is common to all types of structures, and says that the resistance $R_d$ of non dissipative connections should satisfy: $R_d \geq 1{,}1\,\gamma_{ov}\,R_{fy}$ $R_{fy}$ is the plastic resistance of the connected dissipative member, based on the design yield strength. $\gamma_{ov}$ is the material overstrength factor explained above.

The rule applies to non dissipative connections using fillet welds or bolts. When full penetration butt welds are used they automatically satisfy the capacity design criterion.

Dissipative zones may be located in the connections, but it must be demonstrated that they have adequate ductility and resistance. When this is the case the connected members should have sufficient overstrength to allow the development of cyclic yielding in the connections. An example of a dissipative connection developed with the support of ArcelorMittal is presented in 12.

## Capacity design applied to bars with holes

There is one case of possible localisation of strains in a structural element for which an explicit design rule is provided in the codes. This concerns bars in tension, in which holes are drilled for connection purposes. The rule says that in order to achieve a plastic mechanism using the bar in tension, the failure resistance of the section with holes *Anet* (net section) must be higher than the yield resistance of the section *A* without holes (gross section):

$$A\,f_y / \gamma_{M0} < A_{net}\,f_u / \gamma_{M2}$$

$\gamma_{M0}$ and $\gamma_{M2}$ are partial safety coefficients respectively for the gross section and forthe net section ; the recommended values are: $\gamma_{M0} = 1{,}0$ et $\gamma_{M2} = 1{,}25$ (EN1993-1-1: 2004). This condition can only be satisfied if the ratio $f_u / f_y$ is high enough, which is however the case with structural steels ($f_u / f_y > 1{,}10$).



www.EngineeringEbooksPdf.com

## Selecting a Ductility Class for design

At the start of a project the designer is free to choose the Ductility Class which he/she wants to achieve with the structure. A non dissipative or low ductility class DCL structure is designed following the basic design codes, with checks for resistance to gravity and wind loads etc. The seismic code defines the seismic action, and the behaviour factor is minimal ($q$ equal to 1,5). Requirements on the materials and classes of section are also minor, and none of the checks from the seismic code need be applied because the expectation is that all the structural components will behave elastically in an earthquake condition, with some eventual minor local plastic zones.

A dissipative structure (Ductility Class DCM or DCH) is designed for a seismic action which is lower than that used in a DCL design, because the behaviour factor $q$ is greater (in the range of 3 to 6). The weight of the structural elements can be substantially reduced, although the design process itself is more onerous, and there are restrictions on the classes of sections, on the connections, on the materials and on the control of the material properties. Designing a 'dissipative' structure normally results in a more competitive solution. However, this is not always the case because the seismic checks may not be critical; a seismic design also has to comply with all 'classical' requirements (such as limitation of beam deflection under gravity loading) and these may govern the size of sections needed. In such a case, capacity design results in dissipative sections which have greater overstrength, which then lead to overstrength and more weight for the other structural elements and the foundations. This situation is more likely to occur in areas of low seismic activity, and for flexible structures for which the serviceability limit states can be the most important. It can be concluded qualitatively that class DCH solutions would in general be best in zones of high seismic activity, while DCM and DCL would be most appropriate for medium and low zones respectively.

The choice of a Ductility Class for a given design also depends on the mass/volume ratio of the structure. If the structure is essentially empty, for example an industrial shed, the wind resultant force $F_w$ can be greater than the design base shear $F_b$ determined with the behaviour factor of a non dissipative structure ($q$ = 1,5), so designing for high ductility is of no interest. Conversely, if a structure is of high mass and stiff, a DCH or DCM design can be the best option, even in areas of low seismic activity.

Another situation concerns the use of industrialised 'system building', where thin walled sections and/or partial strength connections may be used. In such cases, providing greater resistance is probably simpler than providing more ductility, therefore a DCL design is favourable.

## Selecting a typology of structure for the design

All types of structure can be designed to resist earthquakes and fulfil all other design requirements, but the most cost effective solutions satisfy all design criteria more or less equally. To help select an appropriate structure type for design, the following typology may be useful.

Moment resisting frames are flexible structures, and their design is most often governed by the limitation of deformations. This generally results in significant overstrength as far as resistance to an earthquake is concerned. One way to avoid this situation consists of designing stiff façade frames as the primary structures, while the interior frames are secondary structures essentially carrying gravity loading alone.

Frames with concentric bracing are stiff by nature, but their behaviour factors q are not the highest possible (see Table 3).

Frames with eccentric bracing combine the high energy dissipation capacity and behaviour factors q associated with moment resisting frames, with stiffness that is similar to that of frames with concentric bracing.

Frames with bracing are rather invasive as the bracing may cut into free space, so they should be placed around the periphery of the building as stiff primary structures to resist earthquakes, while the interior secondary structures carry the gravity loading.

www.EngineeringEbooksPdf.com

# 10. SEISMIC DESIGN OF MOMENT RESISTING FRAMES

Design objective for moment resisting frames (or MRFs).
US and European Ductility Classes.
Design criteria.
Redistribution of bending moments in beams.
Other requirements.
Plastic hinges.
Recommended designs for beam to column connections.
Design of reduced beam sections.
Connections of columns to foundations.



www.EngineeringEbooksPdf.com

## Design objective for dissipative moment resisting frames (MRF)

The global design objective for dissipative moment resisting frames is to form plastic hinges in either the beams or their connections to the columns, but not in the columns. Such an objective leads to a solution that is often called a 'weak beam-strong column' (WBSC) frame, as shown in Figure 25 a). It does allow plastic hinges in the columns at the base of the frame and at the top of columns at roof level. It has several positive features:

- Partial mechanisms of the 'soft storey' type are avoided (see Figure 20).
- Whereas plastic hinges in beams take advantage of the full plastic moment resistance of the section, this is not the case with hinges in columns due to the interaction of moments and axial forces. Furthermore, plastic hinges in columns would create problems in terms of both column and global stability.
- *P-Δ* effects are less important if hinges are not in the columns (Figure 25 a and b).
- A partial failure at a beam end does not necessarily lead to collapse of the beam, and even if it does then collapse may be limited to that beam alone. However, a partial failure in a column can easily be catastrophic for the complete structure.

**Figure 25**
a) A frame with 'weak beams-strong columns'
b) Plastic hinges in columns result in larger *P-Δ* effects.
c) Parameters used in the definition of the capacity of rotation in Eurocode 8. (EN1998-1-1:2004).

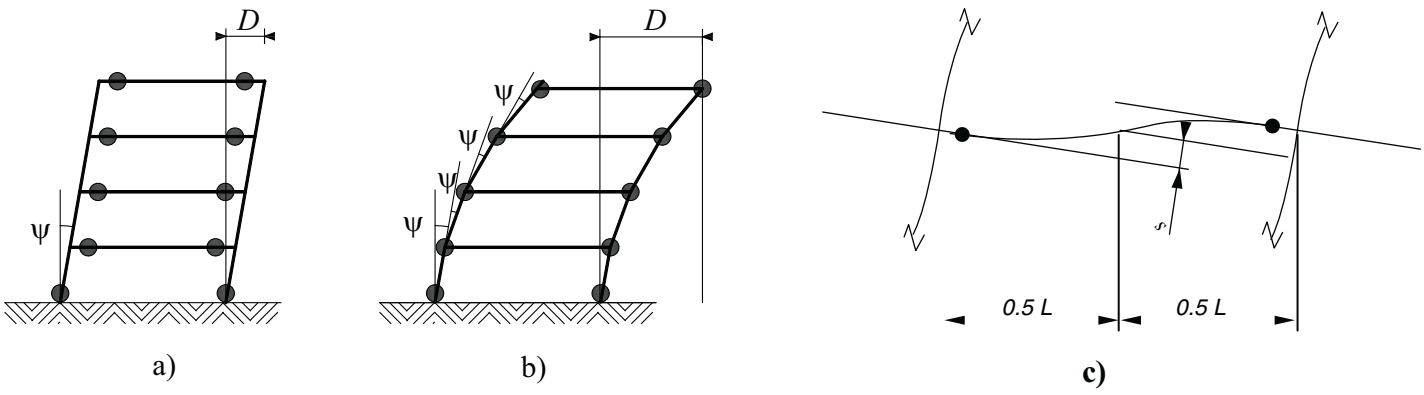


www.EngineeringEbooksPdf.com

# U.S. and European Ductility Classes for moment resisting frames

U.S. and European Ductility Classes for moment resisting frames are defined in Table 8, which shows the maximum value of the behaviour factor associated with each class and some of their respective requirements. (Figure 25 c)

**Table 8**
U.S. and European Ductility Classes for moment resisting frames.

| MRF Ductility Classes | Country | Designation Of Moment Frame | Force Reduction Factor *R* (US) Behaviour Factor *q* (EU) | Req. Plastic Rotation Capacity mrad * | Capacity Design of Connections |
|---|---|---|---|---|---|
| Low Ductility | U.S. | OMF<br>Ordinary Moment Frame | 3,5 | ____ | Yes |
| | Europe | DCL<br>Ductility Class Low | 1,5 – 2,0** | ____ | No |
| Medium Ductility | U.S. | IMF<br>Intermediate Moment Frame | 4,5 | 20 | Yes |
| | Europe | DCM<br>Ductility Class Medium | 4 | 25 | Yes |
| High Ductility | U.S. | SMF<br>Special Moment Frame | 8 | 40 | Yes |
| | Europe | DCH<br>Ductility Class High | 6 | 35 | Yes |

* The rotation capacity provided by a given combination of beam, connection and column is evaluated by tests followed by data processing. The definitions of rotation capacity are slightly different in Europe and in the U.S. In Europe, the rotation $\theta p$ is defined as: $\theta p = \delta / 0{,}5L$ in which $\delta$ is the deflection at midspan of the beam and $L$ the beam span shown at Figure 25 c). In the USA, the effect on $\delta$ of the elastic deformation of the column on a storey height is added and thus included in the capacity of rotation.

** the National Annex can allow $q = 2$ in class DCL



www.EngineeringEbooksPdf.com

## Design criteria for dissipative moment resisting frames

The moment resistance $M_{pl,Rd}$ at beam ends should be greater than the applied moments $M_{Ed}$: $M_{pl,Rd} \geq M_{Ed}$
$M_{Ed}$ results from the seismic combination defined for the check of resistance of structural elements (see 6.), that is by the combination of:

- the moment $M_{Ed,E}$ established by the analysis of the structure submitted to seismic action, which is an elastic analysis under an earthquake action reduced by a behaviour factor $q$
- the moment $M_{Ed,G}$ established by the analysis of the structure submitted to the maximum local gravity loads $G + \psi_{2i} Q$

Equilibrium at beam to column intersections means that the sum of the beam moments $M_{Eb}$ due to seismic action must be equal to the sum of the column moments $M_{Ec}$. If the beams are weaker than the columns they yield first and behave like ductile 'fuses'. The design criterion is that at all the beam to column joints the sum $\Sigma M_{Rb}$ of the design values of the moments of resistance of the beams and the sum $\Sigma M_{Rc}$ of the moments of resistance of the columns framing a joint should satisfy:

$$\sum M_{\mathrm{Rc}} \geq 1{,}3 \sum M_{\mathrm{Rb}}$$

In this expression the moments of resistance of the columns take into account interaction between moments and axial forces, and the most unfavourable combination of these should be considered.
When partial strength beam to column connections are used then $\Sigma M_{Rb}$ represents the sum of the moments of resistance of these connections.
The coefficient 1,3 is chosen to ensure that the beams are sufficiently weaker than columns to always ensure the formation of a global mechanism.

## Redistribution of bending moments in beams

Under a combination of gravity loading and seismic loading effects, the values of the maximum positive and negative bending moments in the beams can be very different. The choice of steel sections must be related to the absolute maximum values. However, following a general statement in Eurocode 8, bending moments in the beams may be redistributed according to and within the limits prescribed by Eurocode 3. A redistribution of moments consists in changing the level of the reference line of the diagram of bending moments, which provides another distribution of moments in equilibrium with the external applied actions. Figure 26 (top) shows such a redistribution of bending moments (but for clarity of the graph, the limitation of redistribution to the prescribed 15% is not respected). Redistribution can bring about a reduction in the design moments of the beams, allowing the use of smaller steel sections and indeed the column sections may also be reduced, due to the capacity design condition:

$$\sum M_{\mathrm{Rc}} \geq 1{,}3 \sum M_{\mathrm{Rb}}$$

Any reductions in section size will clearly make the structure more flexible than the original design, and its response will be changed. A further analysis of the structure, considering the modifications made, has to be performed in order to validate its design.

www.EngineeringEbooksPdf.com

## Other requirements

In order to achieve the full plastic moment in beams, compression and shear forces should not be high. They are restricted to:

$$\frac{N_{Ed}}{N_{pl,Rd}} \leq 0{,}15 \qquad \frac{V_{Ed}}{V_{pl,Rd}} \leq 0{,}5$$

to avoid interaction effects.
$N_{Ed}$ is the design axial force and $V_{Ed}$ the design shear, calculated as $V_{Ed} = V_{Ed,G} + V_{Ed,M}$. This expression reflects a capacity design requirement; the seismic component $V_{Ed,M}$ of the design shear $V_{Ed}$ in a beam is related to the situation in which the moments at the beam ends are the plastic moments $M_{pl,Rd}$, left and $M_{pl,Rd}$, right and not the bending moments $M_{Ed}$ given by the consideration of seismic action effects in the elastic analysis.
$V_{Ed,M} = (M_{pl,Rd,\,left} + M_{pl,Rd,\,right}) / L$ in which $L$ is the beam span, as shown in Figure 26 (bottom).
$V_{Ed,G}$ is a result of the gravity loads $G + \psi_{2i}\,Q$, which are the loads present in the seismic situation.

Preventing lateral torsional buckling of beams in $M_{RFs}$ is also necessary in order to achieve the full plastic moment in beams.

Connections between top and bottom flanges of beams and floors (slabs etc) can provide effective lateral restraint to the beam sections.

Columns are capacity designed relative to the beams. In this case, the element being considered (a column) is not the same as the element in which the plastic zone will develop (a beam). As the yield stress of the beam may be higher than the design yield stress, the axial force $N_{Ed}$ in the column corresponding to the formation of the plastic hinge in the beam may be higher than the value $N_{Ed,E}$ computed in the elastic analysis. $N_{Ed}$, $M_{Ed}$ and $V_{Ed}$ should be computed as:

$$N_{Ed} = N_{Ed,G} + 1{,}1\gamma_{ov}\,\Omega N_{Ed,E}$$
$$M_{Ed} = M_{Ed,G} + 1{,}1\gamma_{ov}\,\Omega M_{Ed,E}$$
$$V_{Ed} = V_{Ed,G} + 1{,}1\gamma_{ov}\,\Omega V_{Ed,E}$$

$\gamma_{ov}$ is a material overstrength factor and $\Omega$ is the minimum value of $\Omega_i = M_{pl,Rd,i}/M_{Ed,i}$ for all beams in which dissipative zones are located. $M_{Ed,i}$ is the design value of the bending moment in beam i in the seismic design situation and $M_{pl,Rd,i}$ is the corresponding plastic moment. The factor 1,1 $\gamma_{ov}\,\Omega$ takes into account the possible overstrength of the plastic hinge in comparison with the value $M_{Ed,i}$ determined from the analysis.
Columns must be verified in compression, considering the most unfavourable combination of axial force and bending moments.
The panel zone of the column has to be checked for shear resistance. If the plastic hinges are formed in the beam sections adjacent to the column on its left and right sides, the horizontal design shear $V_{wp,Ed}$ in the panel zone is equal to (Figure 27):
$V_{wp,Ed} = M_{pl,Rd,\,left} / (d_{left} - 2t_{f,left}) + M_{pl,Rd,\,right} / (d_{right} - 2t_{f,right}) + V_{Ed,\,c}$

$V_{Ed,c}$ is the shear in the section of the column above the node, obtained as the combination of $V_{Ed,E}$, established by the analysis of the structure submitted to the seismic action, with $V_{Ed,G}$, effect of maximum local gravity loading found under $G + \psi_{2i}\,Q$
If the plastic hinges are formed at a distance $D$ from the column face, the moments $M_{pl,Rd,\,left}$ and $M_{pl,Rd,right}$ in the formula above should be replaced by $M_{Sd,left}$ and $M_{Sd,right}$ defined as:
$M_{Sd,left} = M_{pl,Rd,\,left} + V_{Ed,M,left} \times D$ and
$M_{Sd,right} = M_{pl,Rd,\,right} + V_{Ed,M,right} \times D$

For column web panels of low slenderness, which are able to develop their full plastic strength, the design check is: $V_{wp,Ed} \leq V_{wp,Rd}$

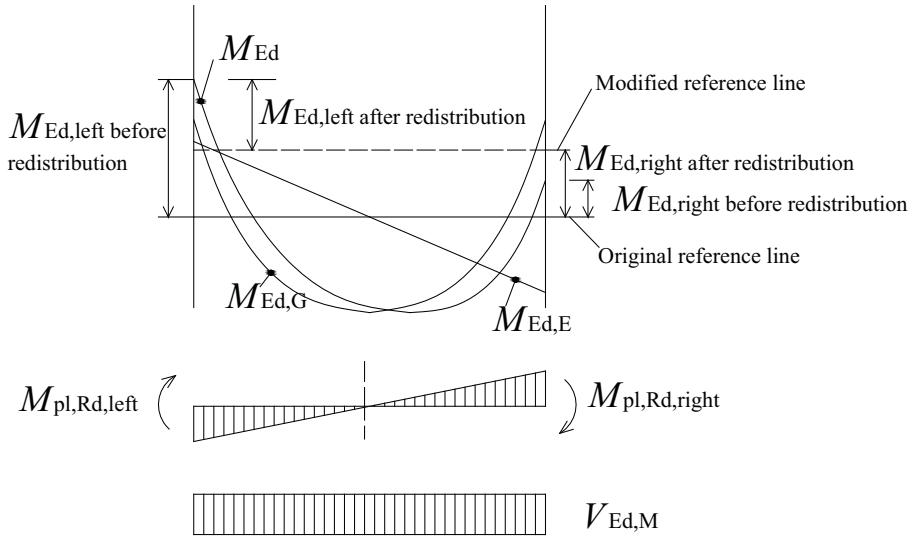


**Figure 26**
Action effects due to seismic action. Top: seismic moment $M_{Ed,E}$, gravity moment $M_{Ed,G}$, combined moments $M_{Ed} = M_{Ed,E} + M_{Ed,G}$ with and without redistribution of moments. Bottom: seismic shear $V_{Ed,M}$



www.EngineeringEbooksPdf.com

For slender webs, in which buckling limits the capacity in shear, the design check is:
$V_{wp,Ed} < V_{wb,Rd}$

Due to the presence of plastic bending moments of opposite signs at the beam ends adjacent to a column, as indicated in Figure 27, the design shear $V_{wp,Ed}$ applied to the panel zone tends to be high. The design checks for web panel shear allow the design action effect to be equal to the shear resistance. This reflects the acceptance by codes of some plastic shear deformation of column web panels, which is justified by the ductility of such a mechanism. However, the design shear $V_{wp,Ed}$ can often exceed the shear resistance $V_{wp,Rd}$ when columns use standard rolled sections and low grade steel, requiring reinforcing plates to be installed. They may be either in the form of a 'doubler' plate welded onto the column web, or two plates welded to the flanges. Stiffeners transverse to the column may also be needed (see Figure 28).

**Figure 27**
Panel zones of columns are subjected to shear corresponding to the plastic moments in the beams.

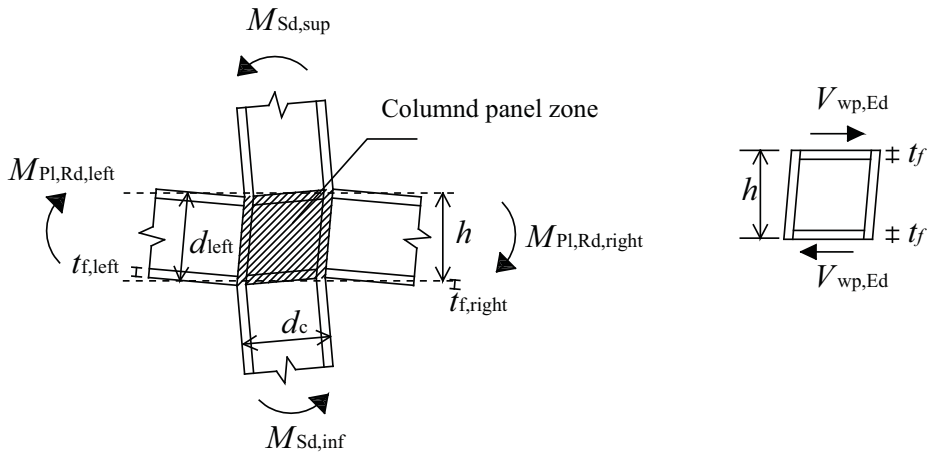


However, doubler plates and transverse stiffeners are costly items due to the fabrication involved, and they can be avoided by using other design options:

- A higher steel grade for the column, for instance ArcelorMittal HISTAR® S460 steel (Grade 65 following ASTM 913), can eliminate the need for additional shear plates.
- A higher steel grade and the use of column sections with thicker flanges can eliminate the need for transverse stiffeners.
- Beams with a reduced cross-section close to the connection (known as Reduced Beam Sections, RBS, or 'dogbones', see details further in text) reduce the bending moments at the beam ends and therefore minimise the demand on the column web and flanges. They may therefore enable the need for doubler plates and/or transverse stiffeners to be avoided (Figure 29).

**Figure 28**
'Doubler' plates to improve the shear resistance of column panel zone.

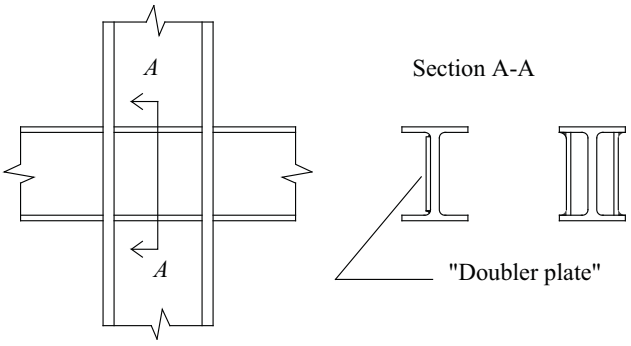


**Figure 29**
Reduced Beam Sections minimise requirements for column section, column stiffeners and demands on beam to column connections (By Courtesy of Prof.C.M.Uang)

www.EngineeringEbooksPdf.com

## Plastic hinges and connections in Moment Resisting Frames

Due to the shape of the bending moment diagram under seismic action, dissipative zones in MRFs are the plastic hinges activated at the beam ends (see Figure 25 a). Normally connections are chosen to be of a full strength rigid type because unbraced MRFs tend to be flexible by their very nature, so additional flexibility due to the connections can create problems with drift limitations and *P-Δ* effects. Whilst plastic hinges can be developed in connections that are of a partial-strength type, by taking advantage of the deformation capacity of components such as end plates and cleats (angles), it must be shown that their resistance is 'stable' under cyclic conditions and this is not yet practical. Another problem with partial strength connections is that because MRFs tend to be flexible structures then any flexibility in connections has to be compensated by using stiffer sections for the beams and columns. This may mean that globally a 'partial strength' design is not the most economical one.

Plastic hinges in unbraced MRFs acting as primary structures for resisting earthquakes are thus classically developed in the beams. The resistance of the connections must be such that $R_{di} > M_{pl,Rd,beam}$ in order to avoid yielding of components of the connection. All connections are thus capacity designed to the beam, such that in bending:

$M_{Rd,connection} \geq \pm 1{,}1\ \gamma_{ov}\ M_{pl,Rd,beam}$

This requirement is considerably more demanding than the static design condition and it influences significantly the size and the cost of the connections (see Figure 30).

In shear the design check is:

$$V_{\mathrm{Rd,connection}} \geq V_{\mathrm{Ed}} = V_{\mathrm{Ed,G}} + 1{,}1\gamma_{\mathrm{ov}}\ \Omega V_{\mathrm{Ed,E}}$$

The definition of symbols is the same as for the design of the columns.

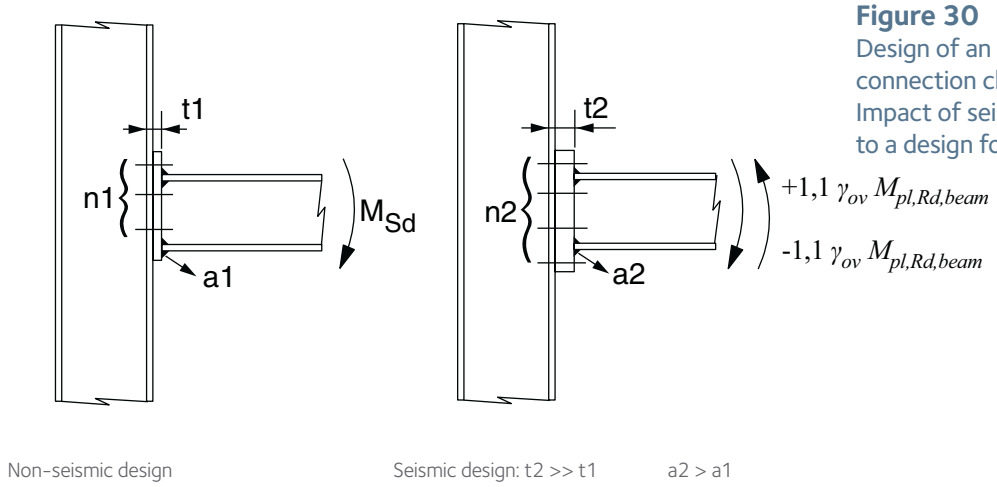


**Figure 30**
Design of an extended end plate connection close to a dissipative zone. Impact of seismic design in comparison to a design for gravity loading alone.



www.EngineeringEbooksPdf.com

The nature of the design checks for moment and shear resistance of the connections is worth emphasising, because they may be critical for the design of connections in which the beam flanges are welded to the column flange, and the beam web is connected to the column by means of shear tabs (as shown in Figure 31). The design condition for the connection is: $M_{Rd,connection} \geq 1{,}1\ \gamma_{ov}\ M_{pl,Rd,beam}$

The plastic bending resistance of the beam $M_{pl,Rd,beam}$ is the sum of the plastic resistance moment of the flanges alone $M_{pl,flanges} = b_f\, t_f\, f_y\, (d + t_f)$ and the plastic resistance moment of the web, $M_{pl,web} = t_w\, d_2\, f_y / 4$

Whilst butt welds connecting the beam flanges to the column flange, or to an end plate, transmit the plastic resistance moment $M_{pl,flanges}$ without problem, the web connection must also transmit the plastic resistance moment of the beam web in order to fulfil the condition: $M_{R,web,connection} \geq 1{,}1\ \gamma_{ov}\ M_{pl,web} = 1{,}1\ \gamma_{ov}\ t_w\, d_2\, f_y / 4$

When the connection detailing involves a shear tab welded to the column flange, this condition requires:

- use of a shear tab with more resistance than the beam web
- welding the tab along its top and bottom sides, in addition to the vertical fillet welds down the vertical sides that carry the shear.

There are three options for the design of rigid beam to column connections, each one of which results in a different location for the plastic hinge:

1. 'classical' connection design, as shown in Figure 31, which does not increase the bending resistance of the beam locally. The plastic hinge then forms in the beam section adjacent to the column flange;
2. other connection design options, such as those shown in Figures 32, 35 and 37, involve increasing the bending resistance of the beam from the column face to a point a short length into the span. The plastic hinge is then developed away from the column face, which has the beneficial effect of separating the stress concentrations in the connection from the plastic strains that develop in the plastic hinge.

**Figure 31**
Beam to column connection with beam flanges welded to column flange and beam web welded to a shear tab that is welded on column flange.

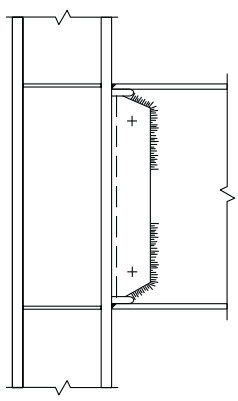

**Figure 32**
The strengthening strategy.

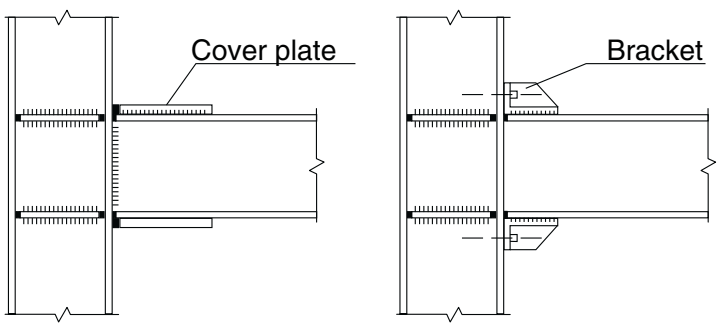


www.EngineeringEbooksPdf.com

3. the beam may be deliberately weakened at some distance from the column, by trimming the flanges. The plastic hinge is then displaced away from the column flange, and the stress concentrations in the connection are separated from the plastic strains that develop in the plastic hinge (see Figure 33).

This last concept, which is known as Reduced Beam Sections (RBS) or 'dog-bone', was originally developed as part of an ArcelorMittal (ARBED) promoted research programme in 1988. After the Northridge earthquake in 1994 and the Kobe earthquake in 1995, poor connection behaviour was observed in many moment resisting frames and the RBS concept became more widely considered as a smart design option to obviate such problems. ArcelorMittal then gave free use of its patent and the concept was further developed, with radius cuts becoming apparent as the most economical option. Design guidance on RBS is now provided in many documents, for example in FEMA2002 and ICCA2002 [6, 7].

Whilst removing material may seem something of a paradox and indeed potentially uneconomical, in fact beam sections are normally sized to meet deformation requirements under gravity and earthquake loadings, often providing more resistance than is needed ('overstrength'). The only effect of adopting RBS is therefore to consume part of this excess. It also:

- reduces very slightly the stiffness of the structure (between 4% and 9%), because sections are only reduced over very short lengths of the beams
- normally does not require any change in the section sizes of the structural elements in order to compensate this minor stiffness reduction
- reduces the ultimate strength of the structure, but not significantly because, as noted above, there is normally a high excess of resistance anyway
- allows column section sizes to be reduced, assuming they have been sized by the 'strong columns-weak beams' capacity design condition
- allows the dimensions of any stiffeners needed in the columns for the transmission of bending moments and shear in the connection zone to be reduced, which can result in a significant reduction in fabrication costs.

The research effort after the Northridge and Kobe earthquakes also showed that factors other than simply the connection design caused poor behaviour of the connection zones. Some issues concerned welds, for example low toughness of the weld material, some weld preparations resulting in stress concentrations and defects (V preparation with cope hole, welding on a backing bar, details required for on site welding), and inadequate weld protection. The base material was also questioned; toughness and weldability characteristics were in many cases far inferior to what ArcelorMittal had long been advising specifiers.

The achievement of appropriate quality explains why the numerous experiments undertaken between 1988 and 1997 on 'classical' welded connections (that is connections that were not strengthened, or using RBS) showed that plastic rotation capacities greater than the 25 or 35 mrad now required by the code could be achieved without difficulty [2][10][11]. These tests were based on H and IPE profiles from ArcelorMittal production, with beam depths of up to 450 mm. The standards adopted for the materials and fabrication procedures complied with the current international requirements, namely weld preparation in K, choice of weld metal, welding from one side followed by welding from the other, appropriate base

**Figure 33**
The weakening strategy using 'dog-bones' or Reduced Beams Sections (RBS), a concept originally developed and patented by ArcelorMittal.

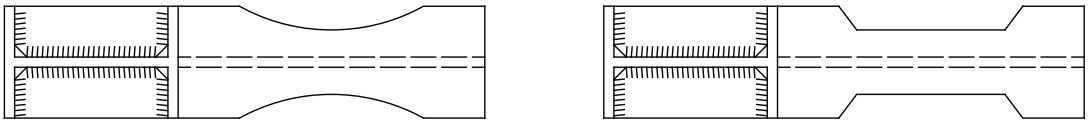



www.EngineeringEbooksPdf.com

and weld material toughness and weldability. Developments of new ASTM A913 and A992 steels by ArcelorMittal extended the validity of these results to deep beams and thick walled sections, with depths up to 1100 mm and flange thicknesses up to 125 mm. The applicability of these steels to seismic applications was further enhanced by the ability of ArcelorMittal to accurately control the grades of the steel produced, and to keep strengths within upper and lower limits. If a higher strength grade is prescribed for the columns, namely U.S. Grade 65 (65 ksi or 450 MPa), while a more traditional Grade 50 (50 ksi or 345 MPa) is adopted for the beams, the designer can be sure that the 'weak beam – strong column' design condition will be effectively achieved, because an upper yield strength of 65 ksi (450 MPa), can be guaranteed for the Grade 50 steel (50 ksi or 345 MPa).

## Recommended design for beam to column connections

Explicit design guidance for beam to column connections in moment resisting frames is now available as a result of the huge international research effort made since 1995. It is presented in documents such as references [6][7][14]. In the context of Eurocode 8, whilst explicit information cannot be found in the main document [1], reference should be made to the National Annexes. Designs in which the plastic hinges are assumed to occur in the beam sections adjacent to the column flanges are allowed, as well as design solutions that adopt either strengthening or weakening strategies. Table 9 relates some connection details to the ductility class for which they are allowed, and Figures 31 to 39 show schematics of these connections.

It should be noted that:

- some connection types other than those indicated in Table 9 are mentioned in some of the references [6][7][14], including partial strength connections and proprietary connections
- references [6][7][14] give detailed guidance on choice of base & weld material, weld types, access hole design (see example in Figure 39), etc. This information is not reproduced here
- some references define a very small number of connections, namely those which are best able to provide high ductility (for example only 3 connection types are given in reference [6])
- there are some minor variations in the connection to class correspondence from one reference to another, even within a given country.

This is particularly the case with connections in which the beam flanges are welded to the column flange whilst the beam web is bolted to a shear tab welded on the column flange (types marked with an * in Table 9). Because there are both bolted and welded components in the connection, which means a mix of 'soft' and 'hard' mechanisms, there may be an overloading of the 'hard' welds resulting in premature failure without much rotation capacity. This is the reason why such connection detailing should be considered as only valid for low ductility DCL or OMF design.

| Connection Type | Maximum Ductility Class allowed | |
|---|---|---|
| | Europe | US |
| Beam flanges welded, beam web bolted to a shear tab welded to column flange. Fig. 34 | DCL * | OMF* |
| Beam flanges welded, Beam web welded to a shear tab welded to column flange. Fig. 31 | DCH | SMF |
| Beam flanges bolted, beam web bolted to a shear tab welded to column flange. Fig. 35 | DCH | SMF |
| Unstiffened end plate welded to beam and bolted to column flange by 4 rows of bolts. Fig.36 | DCH | SMF |
| Stiffened end plate welded to beam and bolted to column flange by 8 rows of bolts. Fig. 37 | DCH | SMF |
| Reduced beam section. Beam flanges welded, beam web welded to shear tab welded to column flange. Fig.38 | DCH | SMF |
| Reduced beam section. Unstiffened end plate welded to beam and bolted to column flange by 4 rows of bolts. Same as Fig.36, but with reduced flange sections. | DCH | SMF |

* May be considered for DCM (equivalent to IMF) in some countries

**Table 9**
Connection Types and corresponding ductility classes

www.EngineeringEbooksPdf.com

**Figure 34**
Beam flanges welded, beam web bolted to shear tab welded to column flange.

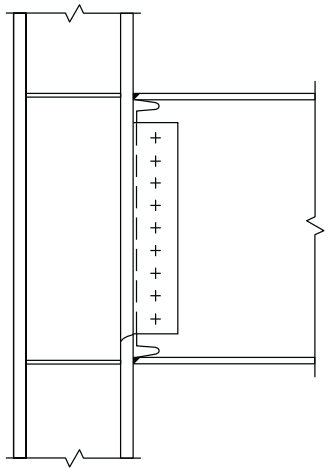

**Figure 35**
Beam flanges bolted; beam web bolted to shear tab welded to column flange. Above: with bolted flange plates. Below: with double split T connection.

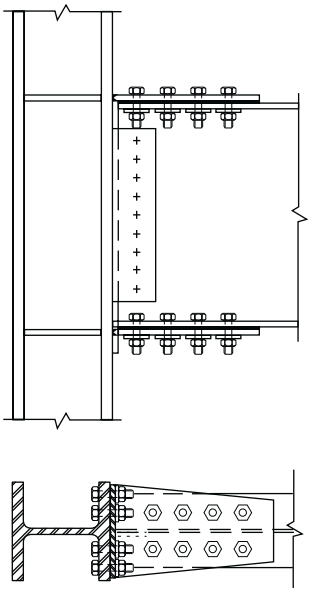

**Figure 36**
Unstiffened end plate welded to beam and bolted to column flange by 4 rows of bolts.

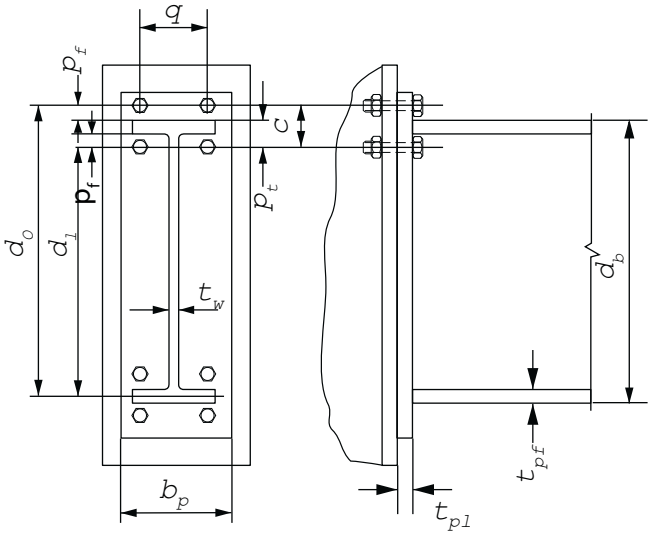




www.EngineeringEbooksPdf.com

**Figure 37**
Stiffened end plate welded to beam and bolted to column flange by 8 rows of bolts.

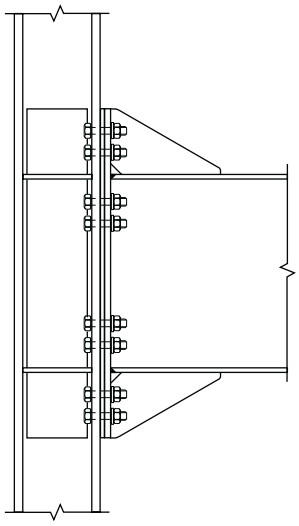

**Figure 38**
Reduced beam section. Beam flanges welded, beam web welded to shear tab welded to column flange.

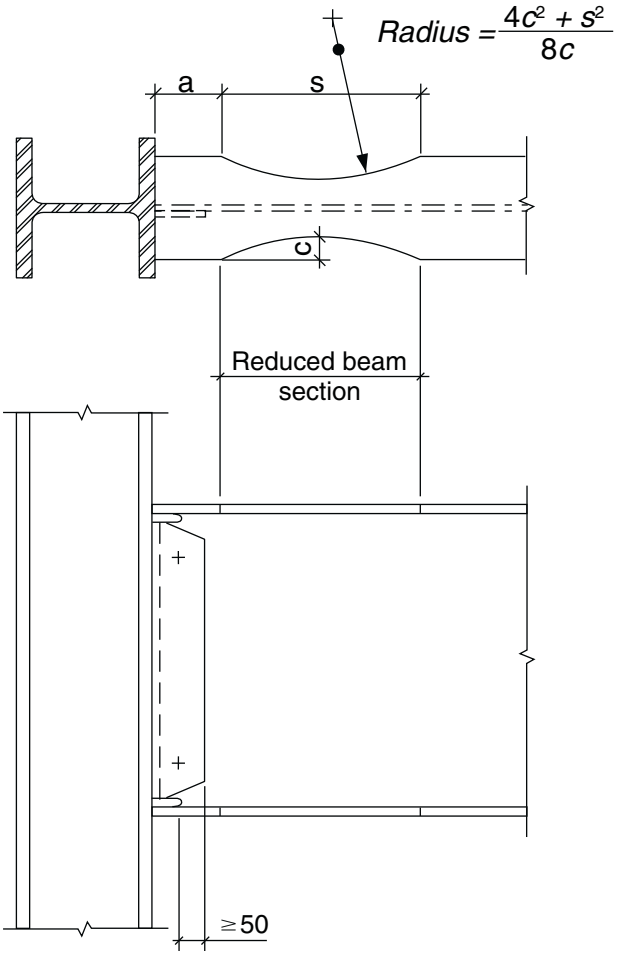


**Figure 39**
Weld access hole details in FEMA 350 [7].

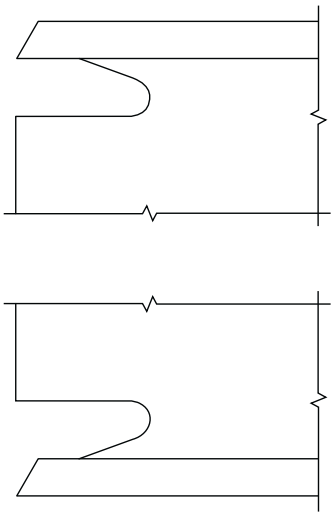

www.EngineeringEbooksPdf.com

## Design of reduced beam sections

The best form of beam flange reduction corresponds to a shape with circular cuts as shown at Figure 38. Their form should respect the geometrical conditions defined hereunder. A design example is given in Section 19.

The length $s$ of the circular cuts and the distance a from the cuts to the face of the column flange should comply with:
$0.5\,b \leq a \leq 0.75\,b$ $\quad 0.65h \leq s \leq 0.85h$
in which b is the beam flange width and h the beam depth.
The depth of the cut c should satisfy: $0.20\,b \leq c \leq 0.25\,b$
The plastic bending resistance $M_{pl,Rd,RBS}$ of the reduced section can then be calculated, the beam flange width at the reduced section being: $b_e = b - 2c$

As the plastic hinge forms at a distance $X = a + s/2$ from the column face, the bending moment applied to the beam to column connection is:
$M_{Ed,connection} = M_{pl,Rd,RBS} + V_{Ed,E} \times X$
with $V_{Ed,E} = 2\,M_{pl,Rd,RBS}/L'$
$L'$ is the distance between the plastic hinges at the left and right hand ends of the beam (see Figure 40).

If $M_{Rd,connection} \geq 1{,}1\ \gamma_{ov}\ M_{Ed,connection}$, then the design is acceptable.

If the critical section is at the column axis (for example a connection with a weak panel zone), then the bending moment is taken as:
$M_{Ed,column} = M_{pl,Rd,RBS} + V_{Ed,E} \times X'$
With: $X' = X + h_c/2$
The design check for shear at the connection is:
$V_{Rd,connection} \geq V_{Ed} = V_{Ed,G} + 1{,}1\ \gamma_{ov}\ \Omega\ V_{Ed,E}$

The panel zone is designed for the action effects $M_{Ed,connection}$ and $V_{Ed}$.

## Connection of columns to foundations

The global mechanism for a MRF involves the development of plastic hinges at the interface between the columns bases and the foundations. This can be achieved by a 'classical' design using a base plate connected by anchor bolts to the foundation. However, transferring the column plastic moment resistance is difficult with such a detail. It usually requires very thick plates, large butt welds and big bolts. Past experience has often demonstrated poor behaviour, with anchorages broken under the concrete surface.

A better option consists of placing the column in a pocket formed in the concrete (Figure 41). None of the components of a 'classical' connection are then needed, the bending moment in the column being equilibrated by two horizontal compression forces $F_{HI}$ and $F_{HS}$ in the foundation block.

**Figure 40**
Calculation of design moment and shear in the connection in presence of a RBS.

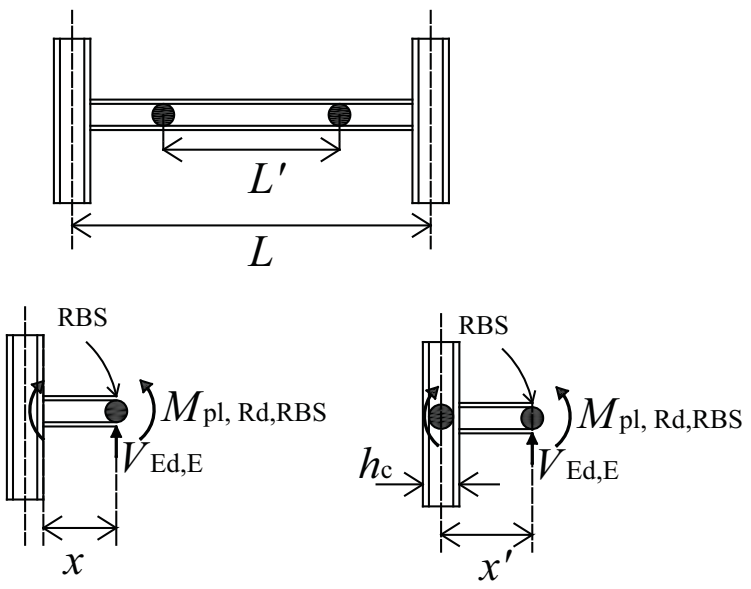


**Figure 41**
Column to foundation connection using a pocket in the concrete.

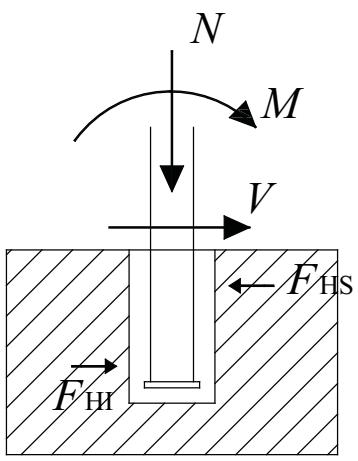




www.EngineeringEbooksPdf.com

# 11. SEISMIC DESIGN OF FRAMES WITH CONCENTRIC BRACING

Design objective.
Analysis of X bracing.
Design Criteria for X bracing.
Other requirements for X bracing.
Design of connections.
Analysis of V or Λ bracing.
Design Criteria for V or Λ bracing.
Other requirements for V or Λ bracing.
US and European design rules for frames with concentric bracing.

www.EngineeringEbooksPdf.com

## Design objective

The global design objective for energy dissipation in the 'classical' design of frames with concentric bracing is to form dissipative zones in the diagonals under tension, and to avoid yielding or buckling of the beams or columns. Diagonals in compression are designed to buckle. The expected for global mechanism in the case of a frame with X bracing is shown in Figure 42 a).

The standard analysis process and the design criteria are slightly different for a frame with X bracings compared with one that has V or Λ bracings. They are presented separately below. The design of K bracings to achieve energy dissipation (DCM or DCH) is not allowed (see Figure 12).

**Figure 42**
a) Global plastic mechanism which is the design objective for frames with X bracings. b) Storey mechanism prevented by the resistance homogenisation condition for the diagonals.

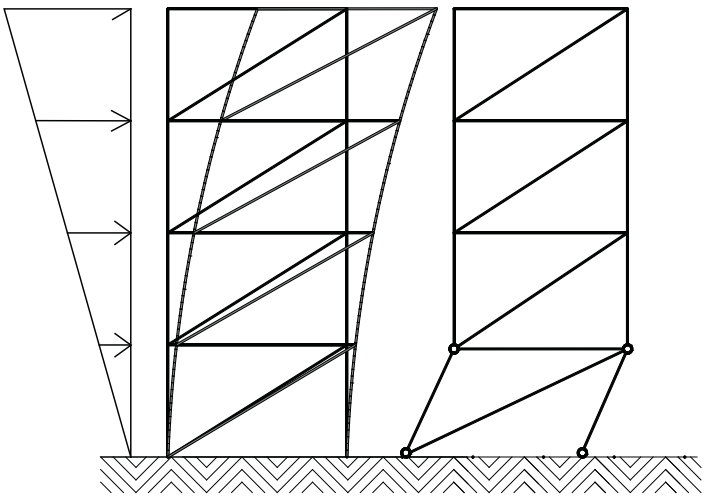

## Analysis of frames with X bracings

The standard analysis is made assuming that:

- under gravity loading, only the beams and columns are present in the model
- under seismic loading, only the diagonals in tension are present in the model (Figure 43).

As only the diagonals in tension, which are stable dissipative elements, contribute to frame stability the behaviour factor q associated with X bracing is high: $q = 4$. Refined analysis of the X bracings also considering the diagonals in compression is possible, but needs a non-linear static or non-linear time history analysis in which both pre-buckling and post-buckling behaviour of diagonals are considered.

**Figure 43**
Models used for the analysis a) under gravity loading. b) under seismic loading.

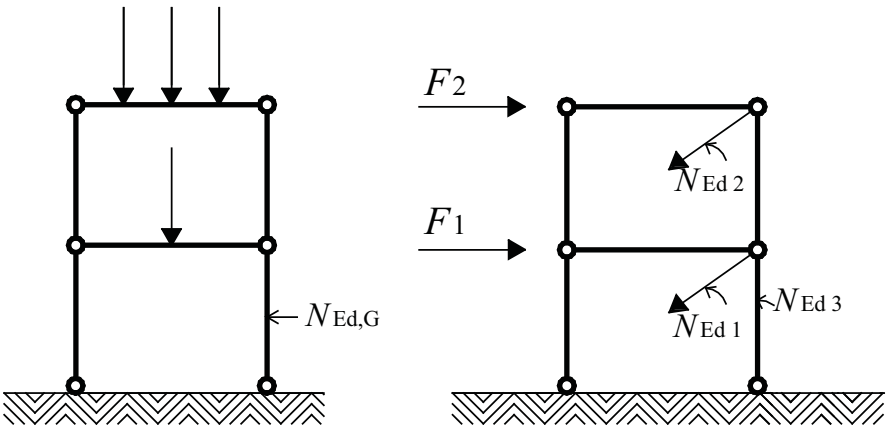




www.EngineeringEbooksPdf.com

## Design criteria for X bracings

The yield resistance $N_{pl,Rd}$ of the diagonals should be greater than the axial tension force $N_{Ed}$ computed under the seismic action effect: $N_{pl,Rd} \geq N_{Ed}$

For each diagonal, the ratio of the resistance provided $N_{pl,Rd}$ to the resistance required $N_{Ed}$ is determined: $\Omega_i = N_{pl,Rd,i} / N_{Ed,i}$.

These ratios $\Omega_i$ represent the excess capacity of the sections with respect to the minimum requirement and are therefore called 'section overstrength'. In order to achieve a global plastic mechanism the values of $\Omega_i$ should not vary too much over the full height of the structure, and a homogenisation criterion is defined; the maximum $\Omega_i$ should not differ from the minimum by more than 25%. Practically, this means that diagonals cannot be made of the same section from top to bottom of the building. $\Omega$ is the symbol reserved for the minimum $\Omega_i$.

As the diagonals are effectively ductile 'fuses', the beam and column design forces are a combination of:

- the axial force $N_{Ed,G}$ due to gravity loading in the seismic design situation
- the axial force $N_{Ed,E}$ due to seismic action amplified by the 'overstrength' of the diagonal, which is found by multiplying the section 'overstrength' factor $\Omega$ by the material 'overstrength' $\gamma_{ov}$ (when applying so-called capacity design).

The axial load design resistance $N_{pl,Rd}$ of the beam or the column, which takes into account interaction with the design bending moment $M_{Ed}$ in the seismic design situation, should satisfy:

$$N_{\mathrm{pl,Rd}}(M_{\mathrm{Ed}}) \geq N_{\mathrm{Ed,G}} + 1{,}1\gamma_{\mathrm{ov}}\,\Omega.N_{\mathrm{Ed,E}}$$

## Other requirements for X bracings

The non-dimensional slenderness $\bar{\lambda}$ of the diagonals should be limited to: $1{,}3 < \bar{\lambda} \leq 2{,}0$. This limitation is justified by the fact that at the first application of force by the earthquake the compression $N_{Ed,E}$ in the diagonals increases up to the buckling strength $N_{b,Rd}$; in other words it is quite significant, and certainly not equal to zero as indicated by the simple analysis model proposed (which only includes the diagonals in tension). Then, after the first loading cycle by the earthquake, due to permanent deformation resulting from buckling the resistance of the diagonals in compression will have decreased sharply, justifying the simple model (which ignores them completely). The 1,3 limit for $\bar{\lambda}$ is intended to avoid overloading the columns in the pre-buckling stage, when both the compression and tension diagonals are active.

If the pairs of diagonals are not positioned as an X, but are decoupled as in Figure 44, then:

- the only limitation for slenderness is: $\bar{\lambda} \leq 2{,}0$
- the design should take into account the tension and compression forces which develop in the columns adjacent to the diagonals in compression, the compression forces in these diagonals being equal to their buckling resistance.

For structures of up to two storeys no limitation applies to $\bar{\lambda}$, and diagonals could be cables.

**Figure 44**
Bracing in which the pair of diagonals of each X brace are decoupled.

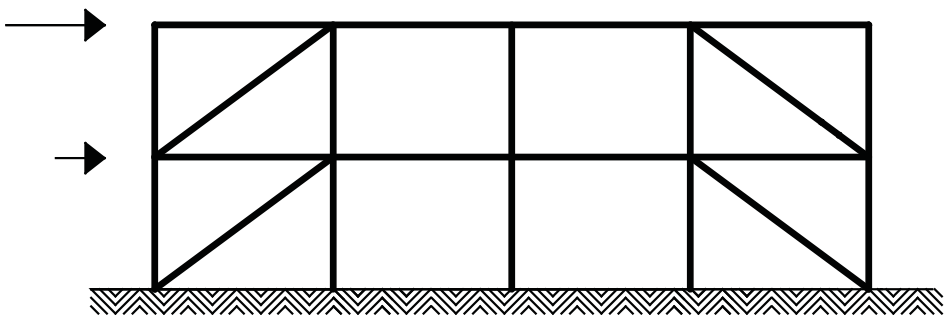

www.EngineeringEbooksPdf.com

## Design of connections

The design of the connections between the diagonals and the beams or columns is made considering the capacity design condition explained in Section 9. The ductility condition explained in the same Section is applied if holes are made for connection purposes. Capacity design of the connections generally results in huge components, due to the fact that the steel sections used for the diagonals have several 'elements' (2 for L sections, 3 for U sections, etc) in which full plastic yielding under tension is developed. As all these 'elements' cannot be directly connected to a gusset plate, either a local increase in the section of the 'element' in contact with the plate (by means of a welded cover plate as shown in Figure 45 b), or the use of an intermediate piece of angle through which part of the force in the diagonal is transmitted (Figure 45 c), is necessary.

**Figure 45**
Comparison between a 'classical' connection design (a) and a connection that is 'capacity designed' relative to the diagonal plastic resistance (b or c).

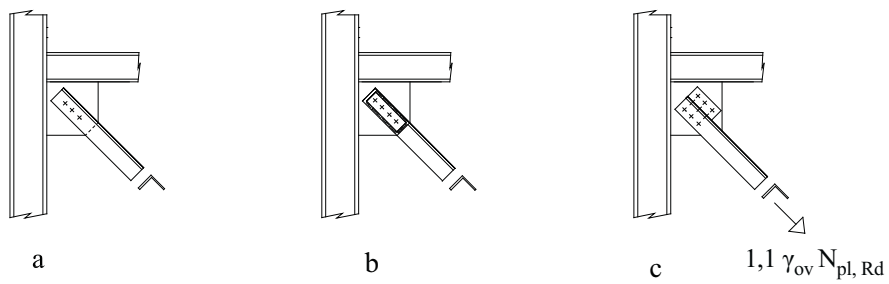


## Analysis of V or Λ bracings

A standard analysis is made assuming that:

- under gravity loading, only the beams and columns are present in the model
- under seismic loading, both the diagonals in tension and the ones in compression are present in the model (see Figure 46).

As the diagonals in compression contribute to the overall stability, but do not provide a means of stable energy dissipation, the behaviour factor $q$ is low: $q = 2$ in DCM $q = 2{,}5$ in DCH .

**Figure 46**
Design action effects applied to a beam in an inverted V (or 'chevron') bracing.

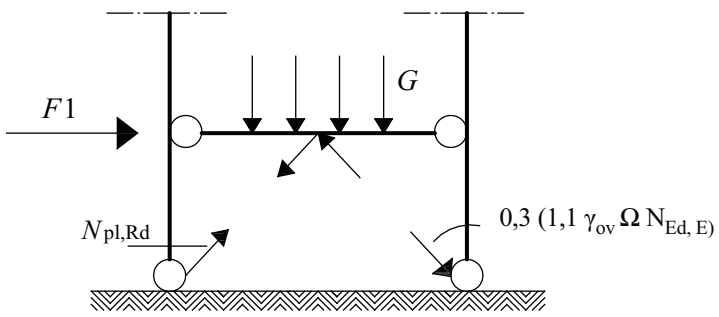




www.EngineeringEbooksPdf.com

## Design Criteria for V or Λ bracing

The criteria for bracing design are similar to those for X bracings:

- Resistance of diagonals in tension: $N_{pl,Rd} \geq N_{Ed}$
- The compression diagonals are designed for compression resistance: $N_{b,Rd} \leq N_{Ed}$
- Homogenisation of diagonal section overstrengths $\Omega_i$ over the height of the building: $\Omega_i = N_{pl,Rd,i} / N_{Ed,i}$.
  The maximum value of $\Omega i$ should not differ from the minimum one by more than 25%. $\Omega$ is the minimum of all the values of $\Omega_i$
- Resistance $N_{pl,Rd}$ of non dissipative elements (beams and columns)

$$N_{\mathrm{pl,Rd}}(M_{\mathrm{Ed}}) \geq N_{\mathrm{Ed,G}} + 1{,}1\gamma_{\mathrm{ov}}\,\Omega.N_{\mathrm{Ed,E}}$$

## Other requirements for V or Λ bracing

The only limitation for the non-dimensional slenderness is that: $\lambda \leq 2{,}0$.
The beams are designed to resist:

- non-seismic actions whilst neglecting the intermediate supports given by the diagonals;
- the vertical seismic action effect applied to the beam by the two diagonals of each V brace after buckling of the compression diagonals has taken place. This action effect is calculated using $N_{pl,Rd} = 1{,}1\ \gamma_{Ov}\ \Omega\ N_{Ed,E}$ as the axial tensile force (diagonal in tension) and considering the post buckling resistance for the diagonals in compression. The latter is estimated as: $\gamma_{pb}\ N_{pl,Rd} = 0{,}3\ N_{pl,Rd}$

## U.S. and European design rules for frames with concentric bracing

U.S. and European design rules for frames with concentric bracing differ significantly in several aspects; models used for simple analysis, force reduction or behaviour factors, required capacity design of connections, and homogenisation of diagonal member overstrengths. Table 10 indicates some different cases of frames with concentric X bracing.

**Table 10**
Some aspects of Ductility Classes in U.S. and European design rules for frames with concentric bracing.

| Duct. Class | Country | Designation Of Frame | Force Reduction R, or Behaviour Factor q | Limit To Diagonal Slenderness $\bar{\lambda}$ | Capacity Design of Connect. | Rule for homog. of diag. overstrs |
|---|---|---|---|---|---|---|
| Low Ductility | U.S. | OCBF Ordinary Concentrically Braced Frame | 5 | No | No | No |
| | Europe | DCL Ductility Class Low X bracings | 1,5 (2,0*) | No | No | No |
| Medium Or High Ductility | U.S. | SCBF Special Concentrically Braced Frame | 6 | ≤ 1,87 | Yes | No |
| | Europe | DCM or DCH Ductility Class Medium or High X bracings | 4 | 1,3< ≤2,0 | Yes | Yes |

*the National Annex can allow q = 2 in class DCL.

www.EngineeringEbooksPdf.com

# 12. SEISMIC DESIGN OF FRAMES WITH CONCENTRIC BRACING AND DISSIPATIVE CONNECTIONS

Interest of dissipative connections in frames with concentric bracings.

Analysis of frames with X, V or Λ bracing and dissipative connections for the diagonals.

Design Criteria for frames with X, V or Λ bracing and dissipative connections for the diagonals.



www.EngineeringEbooksPdf.com

## Interest of dissipative connections in frames with concentric bracing

Dissipative semi-rigid and/or partial strength connections are permitted by codes, provided that the adequacy of design (strength, stiffness, ductility) is supported by experimental evidence. Several reasons justify the interest in partial strength connections:

- Partial strength connections can be designed to have a resistance that is lower than the buckling strength of the diagonal, thereby preventing yielding and buckling of the latter.
- As no buckling takes place, the analytical difficulties that result when diagonals in compression buckle, with consideration of their buckling resistance at the pre and post-buckling stages, are avoided. All frame members are therefore represented in the model for simple analysis. All the results of the analysis may be used directly, with no distinct rules for X and V braces, or for decoupled braces.
- As all diagonals are represented in the model for simple analysis, they provide additional stiffness in comparison to the 'tension diagonal only' model. This compensates for the additional flexibility resulting from the use of semi-rigid connections.
- Partial strength connections can be developed as 'standardised' components with calibrated strength obviating the problems of considering the diagonal overstrength in the design of beams and columns. $\gamma_{ov}$ can be taken equal to 1,0.
- After an earthquake, replacement of deformed components of connections is easier than replacement of complete diagonals.

Dissipative connections must be able to deform significantly, and without loss of strength, for the structure to achieve the drifts of up to 3% that may be imposed by the earthquake. With dissipative diagonals, the drift is achieved with a low strain ε over the total length of the diagonals. With dissipative connections, the deformation is concentrated in the connection.

In 2001 ArcelorMittal, aware of the considerable potential of partial strength connections in the seismic design of frames with concentric bracing, initiated the INERD research project with a team of five European Universities [9]. This resulted in the development of two designs, namely the 'pin' connection and the 'U shape' connection. A pin connections consists of two external eye-bars welded or bolted to the adjacent member (column or beam), one or two internal eye-bars welded to the diagonal brace and a pin running through the

a)

b)

**Figure 47**
Rectangular pin connection with two internal eye-bars.
a) 3D view. b) in test.

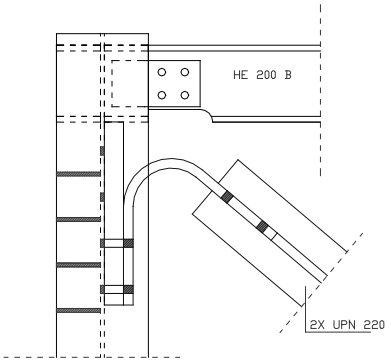


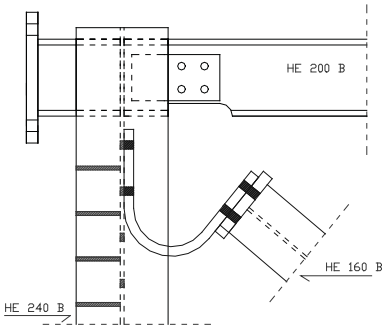


**Figure 48**
Two designs with a U connection.

www.EngineeringEbooksPdf.com

eye-bars (see Figure 47). In this type of connection the pin dissipates energy through inelastic bending. A 'U shape' connection consists of one or two bent U-shaped thick plates that connect the brace to the adjacent member (see Figure 48). The energy dissipation takes place in the bent plate(s).

Numerous tests have been undertaken on connections and frames. Numerical modelling of structures submitted to earthquakes has also been performed. This research has demonstrated the validity of the design approach. Both types of connection show potential in terms of ductility, offering an elongation capacity similar to that of a dissipative diagonal; more than 50mm for an individual connection, meaning a total of 100mm for one diagonal. The pin connection also shows potential in terms of its strength and stiffness, and can readily be put into practical use.

The behaviour factor q of frames with concentric bracing and partial strength connections is higher ($q = 6$) than that of a 'classical' design (2 to 4), due to a better control of the global plastic mechanism.

## Analysis of frames with X, V or Λ bracing and dissipative connections for the diagonals

A standard analysis is carried out assuming that:

- under gravity loading, only the beams and columns are present in the model
- under seismic loading, all diagonals are in the model

## Design Criteria for frames with X, V or Λ bracing and dissipative connections for the diagonals

The following criteria should be applied:

- Resistance $R_{pl,Rd}$ of the dissipative connections: $R_{pl,Rd} \geq N_{Ed}$
- Resistance $N_{b,Rd}$ of the diagonals established by capacity design to the dissipative connections resistance: $N_{b,Rd} > R_{pl,Rd} \geq N_{Ed}$
- Homogenisation of the dissipative connections overstrengths over the height of the building: $\Omega i = R_{pl,Rd,i} / N_{Ed,i}$ The maximum value of $\Omega_i$ should not differ from the minimum by more than 25%. $\Omega$ is the minimum value of $\Omega_i$
- If $R_{pl,Rd}$ of the dissipative connections is known (controlled production of standard connections), $\gamma_{ov} = 1.0$
- Resistance in tension $N_{pl,Rd}$ or in compression $N_{b,Rd}$ of the non dissipative elements (beams and columns):

$$N_{\mathrm{pl,Rd}}(M_{\mathrm{Ed}}) \quad \text{or}$$

$$N_{\mathrm{b,Rd}}(M_{\mathrm{Ed}}) \geq N_{\mathrm{Ed,G}} + 1{,}1\gamma_{\mathrm{ov}}\,\Omega.N_{\mathrm{Ed,E}}$$

There are no other specific requirements for frames with X, V or Λ bracing and dissipative connections for the diagonals.



www.EngineeringEbooksPdf.com

# 13. SEISMIC DESIGN OF FRAMES WITH ECCENTRIC BRACING

General features of the design of frames with eccentric bracing.

Short links and long links.

Selection of a type of eccentric bracing.

www.EngineeringEbooksPdf.com

## General features of the design of frames with eccentric bracing

The geometry of frames with eccentric bracing is close to that of frames with concentric bracing, except that some intentional eccentricities e in the layout of the elements (see Figure 49) generate bending moments and shears. These structures resist horizontal forces essentially by axial load in the members, but they are designed to yield first in shear or bending in localised 'seismic links'. These are zones created by positioning the ends of the braces away from the 'usual' intersection points with other elements.

The analysis of frames with eccentric bracing does not require the approximations made for frames with concentric bracing, because none of the diagonals is designed to buckle under seismic actions. The diagonals themselves are non dissipative zones that are 'capacity designed' relative to the strength of the links, in order to ensure they remain elastic and do not buckle.

There are several reasons for selecting a frame with eccentric bracing as an earthquake resistant structure:

- such frames combine stiffness with a q factor that is higher than for a frame with concentric bracing: $q = 6$ instead of a maximum of 4 (see Table 3).
- connections are made between three elements, not four as in frames with concentric bracings. This results in less complicated connection details which reduce fabrication costs and may also simplify the erection of the structure
- diagonals are parts of the structural system that supports the gravity loads, providing an increase in stiffness.

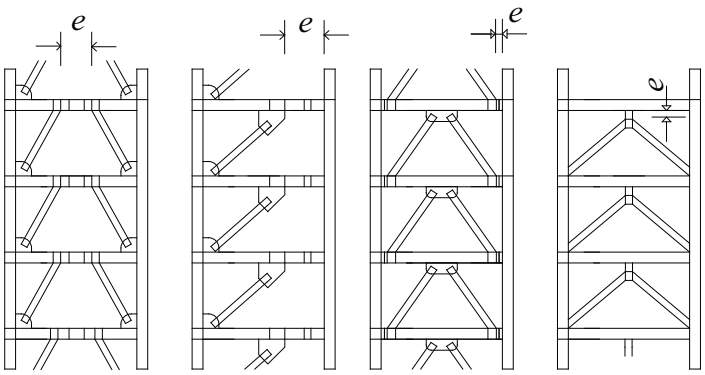


**Figure 49**
Examples of frames with eccentric bracing



www.EngineeringEbooksPdf.com

## Short links and long links

Seismic links are designed to carry the calculated seismic action effect in either shear or bending, by satisfying $V_{Ed} \leq V_{p,link}$ and $M_{Ed} \leq M_{p,link}$, in which $V_{p,link}$ and $M_{p,link}$ are the plastic shear and bending resistance of the link respectively. For H sections:
$V_{p,link} = (f_y / \sqrt{3})\, t_w (d - t_f)$ and
$M_{p,link} = f_y\, b\, t_f (d - t_f)$

Depending on the frame typology, the shear and bending moment diagrams in the link are symmetrical (as shown in Figure 50), or not (as shown in Figure 51).

The plastic mechanism achieved in seismic links depends on their length e. Short links yield essentially in shear, and the energy dissipated in the plastic mechanism is:
$W_V = V_{p,link}\, \theta_p\, e$

Long links yield essentially in bending.

**Figure 50**
Eccentric braces in which the shear and bending moment diagrams in the link are symmetrical.

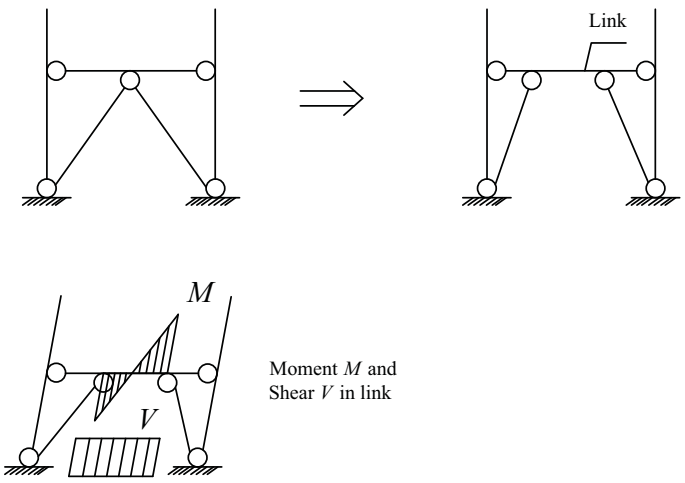


**Figure 51**
Eccentric braces in which the shear and bending moment diagrams in the link are unsymmetrical.

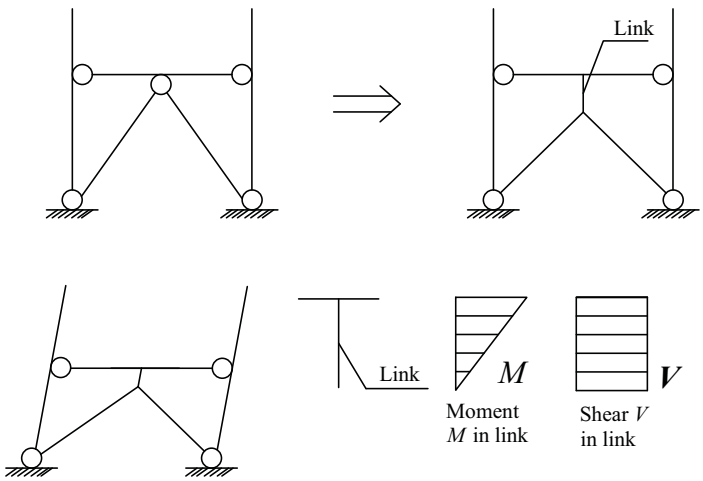


www.EngineeringEbooksPdf.com

In a link submitted to a symmetrical action effect $M$, as in Figure 52 b), the energy dissipated in the plastic mechanism is: $W_M = 2\ M_{p,link}\ \theta_p$
The limit between long and short links corresponds to the situation in which yielding could equally take place in shear or bending:
$W_M = W_V \Rightarrow 2\ M_{p,link}\ \theta_p = V_{p,link}\ \theta_p\ e$
$\Rightarrow e = 2\ M_{p,link} / V_{p,link}$

For values of e around this limit, significant bending moments and shear forces exist simultaneously and their interaction has to be considered. In Eurocode 8, the value of e for considering a plastic mechanism in shear (short links) is: $e < e_s = 1{,}6\ M_{p,link} / V_{p,link}$

The value of $e$ for considering only a plastic mechanism in bending (long links) is :
$e > e_L = 3\ M_{p,link} / V_{p,link}$

Between these two values $e_s$ and $e_L$ , links are said to be 'intermediate' and the interaction between shear and bending has to be considered. If the typology of the structure is such that the shear and bending moment diagrams are not symmetrical, only one plastic hinge will form if the link is long, so that: $W_M = M_{p,link}\ \theta_p$ . In this case, the limiting length between long and short links corresponds to: $e = M_{p,link} / V_{p,link}$
See the example of vertical shear links shown in Figure 51.

The criteria that must be satisfied in order to form a global plastic mechanism are similar in frames with eccentric or concentric braces, because they correspond to the same concept. There should be homogenisation of the dissipative connections' overstrengths $\Omega_i$ over the height of the building ( Short links: $\Omega_i = V_{pl,Rd,i} / V_{Ed,i}$ ; Long Links: $\Omega_i = M_{pl,Rd,i} / M_{Ed,i}$ ). The maximum value of $\Omega_i$ should not differ from the minimum by more than 25%. $\Omega$ is the minimum value of $\Omega_i$ that will ensure that yielding occurs simultaneously at several places over the height of the building, and a global mechanism is formed. The beams, columns and connections are 'capacity designed' relative to the real strengths of the seismic links. This is achieved by satisfying:
$N_{Rd}(M_{Ed}, V_{Ed}) \geq N_{Ed,G} + 1{,}1\ \gamma_{ov}\ \Omega\ N_{Ed,E}$
$E_d \geq E_{d,G} + 1{,}1\ \gamma_{ov}\ \Omega_i\ E_{d,E}$

**Figure 52**
Energy W dissipated in plastic mechanisms a) in shear b) in bending.

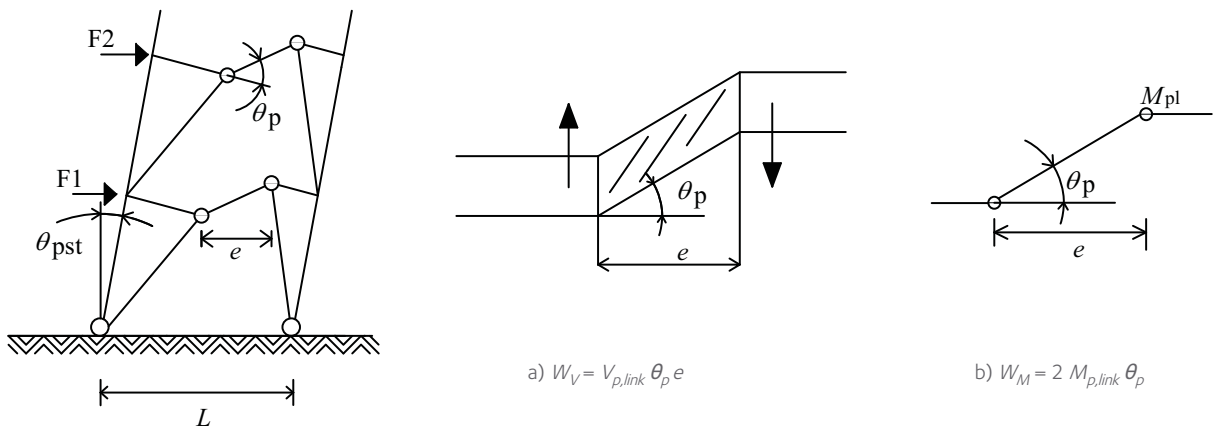


a) $W_V = V_{p,link}\ \theta_p\ e$

b) $W_M = 2\ M_{p,link}\ \theta_p$



www.EngineeringEbooksPdf.com

## Selection of a type of eccentric bracing

There are many potential types of eccentric bracings. The choice between short and long links is partly determined by the following considerations:

- short links provide more stiffness than long links
- shear deformations are essentially in-plane deformations of the webs of sections, without any marked tendency to lateral torsional buckling
- long links mean strong bending effects take place with a potential for lateral torsional buckling, which has to be prevented by strong lateral restraints of the upper and lower flanges of the steel sections.

The choice between various typologies is influenced by many factors, including the openings required by the architecture, and by structural considerations:

- The distribution of resistance over the height of the building should follow the shear distribution, in order to distribute yielding over the height of the structure.
- If the seismic links are in the beams, whilst the beam sections are determined by design checks other than those of ULS under seismic conditions, the requirement for homogenizing the section overstrength ratios $\Omega i$ of the dissipative zones may require an important overstrength of the beams and consequently of all other structural components due to 'capacity design'. Frames with V or inverted V eccentric braces in which the Vs have a flat horizontal tip correspond to this situation.
- One way to overcome this penalty is to select a frame typology which forces all the seismic links to yield simultaneously, like the frame shown in Figure 53.
- Vertical seismic links as shown in Figure 51 can more easily be designed as specific 'ductile fuses', because gravity loading subjects them essentially to axial forces which do not interact significantly with their bending and/or shear resistance.

Frames with eccentric bracing making were originally designed to dissipate energy through seismic links and not in partial strength connections. But frames with eccentric bracings can make use of partial strength connections.

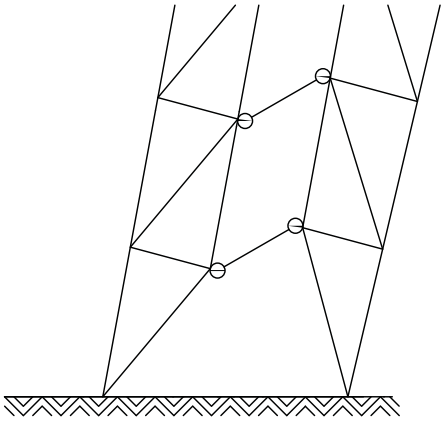

**Figure 53**
Typology of eccentric bracing in which seismic links yield simultaneously.

www.EngineeringEbooksPdf.com

# 14. COMPOSITE STEEL CONCRETE STRUCTURES

Introduction.
How can composite structural elements be dissipative?
A basic choice in the design of dissipative composite structures;
the degree of composite 'character'.
Design concepts and behaviour factors q in the context of the Eurocodes.
Materials.
Stiffness of sections.
Plastic resistance of dissipative zones.
Ductility in bending of composite beams.
Detailing rules for composite connections in dissipative zones.
Favourable influence of concrete encasement on local ductility.
General rules for the design of dissipative and non dissipative elements.
Anchorage and splicing of reinforcement bars.
Fully encased composite columns.
Partially encased members.
Steel beams acting composite with the slab.
Effective width of slab.


www.EngineeringEbooksPdf.com

## Introduction

There are a lot of opportunities for the use of composite steel concrete design in buildings. Besides the 'classical' types of steel structures, such as moment resisting frames and frames with concentric or eccentric bracing,, composite structures can be:

- Composite wall structures, of Types 1 and 2 as shown in Figure 54.
- Mixed design systems involving concrete walls or columns and steel or composite beams; Type 3 in Figure 54.
- Composite steel plate shear walls consisting of a vertical steel plate that is continuous over the height of the building, with structural steel or composite vertical boundary members and with reinforced concrete encasement on one or both faces of the plate.

Sections 14 to 17 present the main aspects of composite design in the context of earthquake resistant structures. Readers should refer to references [1][2][13][17] for more detailed information. Section 14 considers general aspects of composite steel concrete structures, whilst Sections 15 to 17 address peculiarities of various structural types, for example moment resisting frames, braced frames, composite steel concrete walls and composite systems with walls.

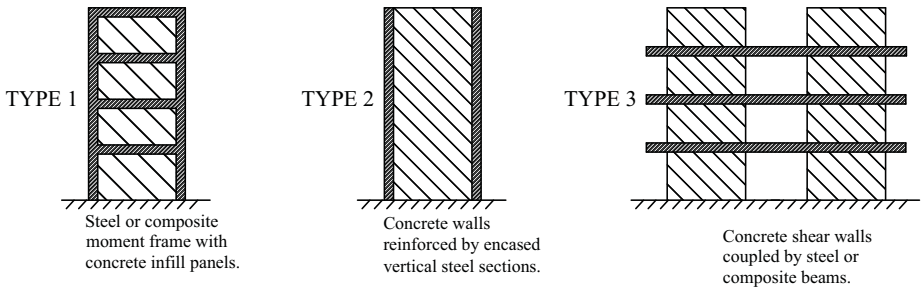


**Figure 54**
Composite walls (Type 1 and 2). Composite or concrete walls coupled by steel or composite beams (Type 3).

www.EngineeringEbooksPdf.com

## How can composite structural elements be dissipative?

Composite beams, columns or connections are made of two materials, namely steel and concrete. Steel is a ductile material, and if correct steel grades are selected then the material elongation at failure is greater than 15% (that is $150 \times 10^{-3}$) and the ductility $\varepsilon_{y,max} / \varepsilon_y$ is above 15. Concrete is characterised by a very limited deformation capacity $\varepsilon_{cu2}$ at failure, of the order of $3{,}5 \times 10^{-3}$. Deformation at failure $\varepsilon_{cu2}$ is in fact only about twice the maximum deformation $\varepsilon_{c2}$ of concrete in the elastic range, so that material ductility is only about 2. This is clearly much less than the value of 15 that can be achieved by structural steel. $\varepsilon_{cu2}$ can be raised by a factor of 2 to 4 if the concrete is well confined by transverse reinforcement, although this improvement is only valid for the section of concrete situated within the confining bars.

The ductility needed in composite structural elements or in composite connections is achieved, as in reinforced concrete, by detailing the design so that the steel yields while the concrete remains elastic. In this way, the integrity of the concrete is maintained during the seismic event, and energy dissipation is achieved by yielding taking place in the steel sections and/or in the re-bars.

## A basic choice in the design of dissipative composite structures; the degree of composite 'character'

Dissipative composite structures need reliable dissipative zones. Two design options exist:

1. either achieve ductile composite elements/connections by complying with certain specific conditions
2. or rely on the steel sections only and ignore any contribution of concrete in the resistance of dissipative zones.

The second option can ease the analysis and the execution, but if the analysis model is to correctly represent the behaviour of the real structure then the latter must have an effective disconnection of concrete from steel in potential dissipative zones. In seismic design this correspondence between model and reality is essential, as underestimating the resistance and stiffness is not a safe approximation. If the analysis model underestimates stiffness it will predict smaller action effects due to the decreasing branch of the response spectrum. Underestimating resistance means that elements sized using capacity design may be incorrect, leading to an underestimation of the sections needed adjacent to dissipative zones, and to a risk of unintentionally creating plasticity in the wrong places.



www.EngineeringEbooksPdf.com

## Design concepts and behaviour factors q in the context of the Eurocodes

Earthquake resistant composite buildings can be designed to one of the following concepts:

- Concept a): low-dissipative structural behaviour and reference only to Eurocode 4 (static design) for the analysis and design.
- Concept b): dissipative structural behaviour with composite dissipative zones and reference to Eurocodes 4 and 8 for structural analysis and design.
- Concept c): dissipative structural behaviour with steel dissipative zones and reference to Eurocodes 3, 4 and 8 for structural analysis and design.

The design concepts are related to structural ductility classes and behaviour factors $q$ in the ways indicated in Table 11.

Behaviour factors q corresponding to different structural types are given in Table 12. Structural types that are similar to pure steel structures have the same behaviour factors. Structures belonging to Ductility Classes DCM or DCH have to meet certain requirements for the steel sections, connections and detailing.

**Table 11**
Design concepts, structural ductility classes and upper limit of reference values of the behaviour factor $q$

| Design concept | Structural Ductility Class | Range of the reference values of the behaviour factor $q$ |
|---|---|---|
| Concept a)<br>Low dissipative structural behaviour | DCL | $q \leq 1{,}5$ (2*) |
| Concepts b) or c)<br>Medium or High Dissipative structural behaviour | DCM | $q \leq 4$<br>+ Limits of Table 12 |
| | DCH | Limits of Table 12 |

* the National Annex can allow $q = 2$ in class DCL.

**Table 12**
Upper limit reference values of behaviour factor $q$ for systems that are regular in elevation

| STRUCTURAL TYPE | Ductility Class | |
|---|---|---|
| | DCM | DCH |
| Moment resisting frames<br>Frames with concentric or eccentric bracing<br>Inverted pendulum | As for steel structures.<br>See Table 3. | |
| Composite structural systems<br>Default value: $\alpha_u/\alpha_1 = 1{,}1$ | | |
| Composite walls (Type 1 and Type 2) | 3 $\alpha_u/\alpha_1$ | 4 $\alpha_u/\alpha_1$ |
| Composite or concrete walls coupled by steel or composite beams (Type 3) | 3 $\alpha_u/\alpha_1$ | 4,5 $\alpha_u/\alpha_1$ |
| Composite steel plate shear walls<br>Default value: $\alpha_u/\alpha_1 = 1{,}2$ | 3 $\alpha_u/\alpha_1$ | 4 $\alpha_u/\alpha_1$ |

www.EngineeringEbooksPdf.com

## Materials

Concrete classes lower than C20/25 or higher than C40/50 are not permitted. Reinforcing steel, bars and welded meshes that are considered to contribute to the plastic resistance of dissipative zones have to satisfy requirements on the ratio $f_u/f_y$ and the available elongation, which are those of steel Class B or C (EN1992-1-1:2004, Table C.1) in Class DCM and those of steel Class C in Class DCH. The requirements are recalled at Table 13. Furthermore, in Class DCH, the upper characteristic value (95% fractile) of the real yield strength, $f_{yk,0,95}$, should not be above the nominal value by more than 25%. Except for closed stirrups or cross ties, only ribbed bars are permitted as reinforcing steel. In slabs that form the flanges of composite beams, welded mesh that does not comply with the ductility requirements may be used in dissipative zones provided ductile reinforcing bars are present to duplicate the mesh. Such duplication is necessary because in moment frames subjected to earthquakes a reliable negative plastic moment resistance in the connection zones requires the presence of ductile reinforcement, while the beam plastic moment resistance used in the capacity design of the columns considers all contributions from reinforcement, be it ductile or not. When there is duplication of non ductile reinforcement the capacity design of the columns therefore results in their overdesign, because safety requires consider both ductile and non ductile reinforcements for the reference strength in the capacity design. In practice, an economical solution is obtained either by using ductile welded mesh or by avoiding the continuity of non ductile reinforcement in dissipative zones. This can be done by using standard ductile re-bars at these locations and by placing the overlap between ductile and non ductile reinforcement away from the dissipative zone.

**Table 13**
Properties of the reinforcements.

| **Type of product** | **Bars and de-coiled rods. Wire fabrics** | |
|---|---|---|
| Class | B | C |
| Characteristic yield strength $f_{yk}$ or $f_{0,2k}$ (MPa) | 400 to 600 | |
| Minimum value of k = $(f_t / f_y)_k$ | $k \geq 1{,}08$ | $1{,}15 \leq k < 1{,}35$ |
| Characteristic strain at maximum force (%) | ≥5,0 | ≥ 7,5 |



www.EngineeringEbooksPdf.com

## Stiffness of sections

The stiffness of composite sections in which the concrete is in compression should be calculated using a modular ratio
$n = E_a / E_{cm} = 7$

For composite beams that incorporate a concrete flange the second moment of area of the section, referred to as $I_1$ (slab in compression) or $I_2$ (slab in tension), should be calculated taking into account the effective width of slab defined at Table 16.

The stiffness of composite sections in which the concrete is in tension should be calculated assuming that the concrete is cracked and that only the steel parts of the section are structural. The structure should be analysed taking into account the presence of concrete in compression in some zones and concrete in tension in other zones or making use of the average value of $I$ or $EI$ mentioned in 15.

## Plastic resistance of dissipative zones

Two different plastic resistances of the dissipative zones are considered in the design of composite steel concrete structures:

- the lower bound plastic resistance (index pl, Rd) of the dissipative zones is the one considered in design checks concerning the sections of the dissipative elements, for example.

  $$M_{\mathrm{Ed}} < M_{\mathrm{pl,Rd}}$$

  This resistance is calculated considering the concrete and only the steel components of the section which are ductile.
- the upper bound plastic resistance (index U, Rd) of the dissipative zones is the one considered in the capacity design of the elements that are adjacent to the dissipative zones. This resistance is established considering the concrete and all the steel components present in the section, including those that are not necessarily ductile, for example welded meshes.

www.EngineeringEbooksPdf.com

## Ductility in bending of steel beams acting compositely with slabs

The general concept used to define the condition for ductility of composite sections is exactly the same as that used for reinforced concrete sections. The strain diagram must indicate that strains in the steel reach the yield strain $\varepsilon_y$ while strains in the concrete are still below $\varepsilon_{cu2}$ (the ultimate strain of concrete in compression). This may be translated into a geometrical condition on the position of the neutral axis (Figure 55). The ratio $x/d$ of the distance $x$ between the top concrete compression fibre and the plastic neutral axis, to the depth d of the composite section, should satisfy to the following requirement:

$$x/d < \varepsilon_{cu2}/(\varepsilon_{cu2} + \varepsilon_a)$$

where $\varepsilon c_{u2}$ is the ultimate compressive strain of the concrete and $\varepsilon_a$ is the total strain in the steel at the Ultimate Limit State.

Table 14 indicates limits of $x/d$ of sections for which the condition is satisfied.

It should be noted that a composite beam (with concrete flange) has a reduced ductility in comparison to that of same steel section alone. This is because the neutral axis is raised towards the upper part of the section (it is typically located in the steel flange), and strains $\varepsilon_{s,composite}$ in the bottom flange of the steel section are increased in comparison to the strains $\varepsilon_{s,steel}$ developed for the same rotation in a symmetrical steel section (Figure 55). These higher strains result in a faster strength degradation due to buckling, and accordingly reduce the ductility of the sections. In order to achieve in all cases a sufficient ductility, the limits imposed to the value of wall slenderness $c/t$ of webs are more restrictive for webs that are fully in compression (for example as found in composite beams with slab) than for webs in bending (as found in symmetrical steel sections as shown at Figure 55). The limiting values imposed to $c/t$ are defined in Eurocode 3 (EN1993-1-1 : 2004, Table 5.2). Limiting values of the wall slenderness $c/t_f$ for flanges remain unchanged.

**Figure 55**
Strains obtained at the same rotation $\theta$ in a symmetrical steel beam and in a composite beam made from the same steel section.

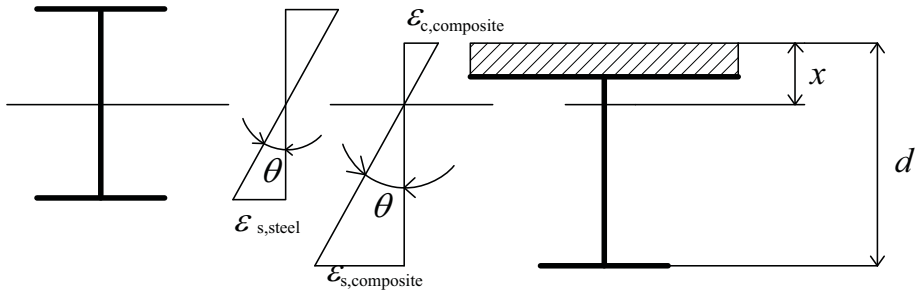


**Table 14**
Limiting values of $x/d$ for ductility of composite beams (with slab)

$$\pm 1{,}1\,\gamma_{ov}\,M_{pl,Rd,trave}$$
$$-1{,}1\,\gamma_{ov}\,M_{pl,Rd,trave}$$

| Ductility class | $q$ | $f_y$ (N/mm$^2$) | $x/d$ upper limit |
|---|---|---|---|
| DCM | $1{,}5 < q \leq 4$ | 355 | 0,27 |
| | $1{,}5 < q \leq 4$ | 235 | 0,36 |
| DCH | $q > 4$ | 355 | 0,20 |
| | $q > 4$ | 235 | 0,27 |



www.EngineeringEbooksPdf.com

## Detailing rules for composite connections in dissipative zones

Local design of the reinforcing bars used in the joint region has to be justified using equilibrium models. Annex C of Eurocode 8 provides complete information for the design of the 'seismic' reinforcement in slabs (see Section 15). When the web panels of beam/column connections are fully encased, the panel zone resistance can be calculated as the sum of the contributions from the concrete and steel shear panel, provided the aspect ratio $h_b/b_p$ of the panel zone satisfies the following conditions:

a) $0{,}6 < h_b/h_c < 1{,}4$

b) $V_{wp,Ed} < 0{,}8\ V_{wp,Rd}$

$V_{wp,Ed}$ is the design shear force in the web panel due to the action effects, taking into account the plastic resistance of the adjacent composite dissipative zones in beams or connections.

$V_{wp,Rd}$ is the shear resistance of the composite steel-concrete web panel in accordance with Eurocode 4. The dimensions $h_b$ and $h_c$ are as defined in Figure 56.

For partially encased stiffened web panels a similar assessment is permitted if straight links, of the type shown in Figure 57, are provided at a maximum spacing $s_1 = c$ in the panel. These links must be oriented perpendicularly to the longer side of the column web panel, and no other reinforcement of the panel is required. These links are not required if $h_b/b_b < 1{,}2$ and $h_c/b_c < 1{,}2$. Figure 57.

**Figure 56**
Beam to column composite connections.

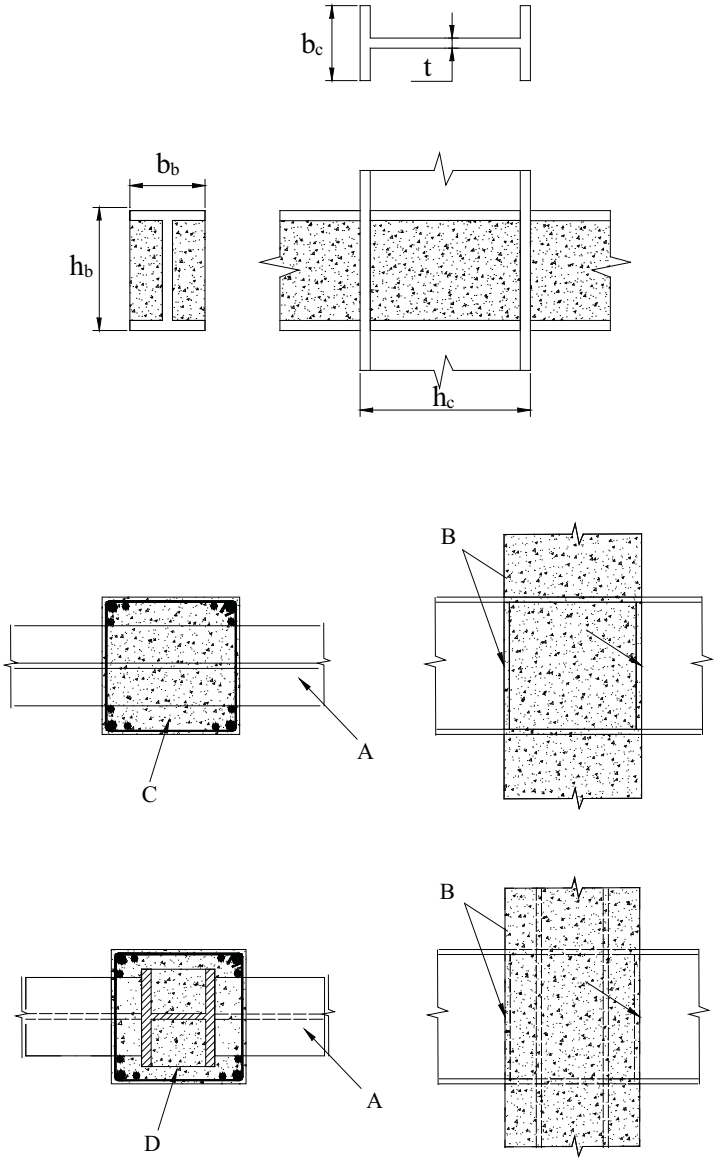


A steel beam
B face bearing plates
C reinforced concrete column
D composite encased column

www.EngineeringEbooksPdf.com

When a dissipative steel or composite beam frames into a reinforced concrete column (see Figure 56), it is necessary to realise the transfer of bending moment and shear present at beam end into the column, which is realised by a couple of vertical reaction forces into the concrete, similarly to those shown in the case of a beam framing into a wall at Figure 68. To maintain the integrity of the column, the following should be checked:

- the capacity of the column to bear locally those forces without crushing, which requires confining (transverse) reinforcement
- the capacity of the column to resist locally tension mobilised by those vertical forces, which requires vertical reinforcements.

Indeed, because of the reversal of signs of the plastic moment at beam end, the reaction is alternatively directed upwards and downwards, depending on the direction of the moves of the frame ; this can put the column under tension. For that reason, a rule in Eurocode 8 prescribes to place in the column, in the vicinity of the beam stiffeners or « face bearing plates » adjacent to the beam plastic hinge, vertical reinforcements with a design axial strength equal to the shear strength of the coupling beam. It is allowed to consider part or total of reinforcement present in the column for other reasons as part or total of the reinforcements so required. These vertical reinforcing bars should be confined by the transverse reinforcement already mentioned. To ensure a good behaviour of the steel coupling beam and of the concrete at the support, the mentioned face bearing plates should be placed in the exterior plane of the concrete. Figure 56.

When a dissipative steel or composite beam is framing into a fully encased composite column (see Figure 56), the beam/column connection may be designed either as a beam/steel column connection or as a beam/composite column connection. In the latter case, vertical column reinforcements may be calculated either as explained above or by distributing the shear strength of the beam between the column steel section and the column reinforcement. The presence of face bearing plates and transverse reinforcements is equally required.

**Figure 57**
Confinement of the composite web panel.

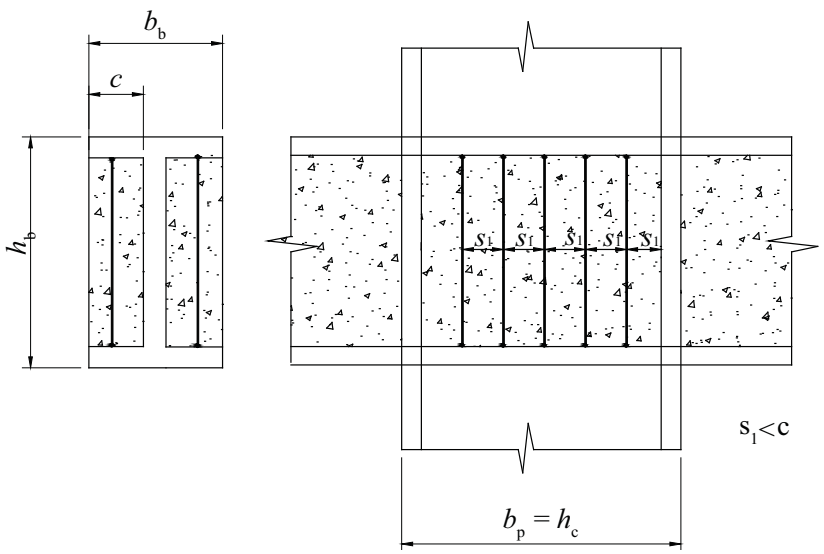




www.EngineeringEbooksPdf.com

## Favourable influence of concrete encasement on local ductility

Concrete used to encase a steel section, or placed between its flanges, prevents inward local buckling of the steel walls/flanges and therefore reduces strength degradation due to buckling. For this reason, some of the limits for wall slenderness of composite sections are higher than those for pure steel sections. These limits can be increased by up to 50% if the following details are placed with certain densities:

- confining hoops, for fully encased sections
- additional straight bars welded to the inside of the flanges, for partially encased sections as shown in Figure 58a.

Table 15 presents values of acceptable wall slenderness for H or I sections in compression. The connection of concrete to web refers to design details defined in Eurocode 4: the concrete is connected to the web of the steel section, either by stirrups welded to the web (see Figure 58b)) or by means of bars of at least 6 mm diameter placed through holes, and/or by studs of at least 10 mm diameter welded to the web. Further guidance on '+ hoops' and 'straight links' is provided below under the subtitles 'Fully encased composite columns' and 'Partially encased members'.

**Table 15**
Limits of wall slenderness for steel and encased H and I sections, for different design details and behaviour factors $q$.

| Ductility Class of Structure | DCM | | DCH |
|---|---|---|---|
| Reference value of behaviour factor $q$<br>FLANGE outstand limits $c/t_f$ | $1{,}5 < q \leq 2$ | $2 < q \leq 4$ | $q > 4$ |
| Reference: H or I Section in steel only<br>EN1993-1-1:2004 Table 5.2 | 14 $\varepsilon$ | 10 $\varepsilon$ | 9 $\varepsilon$ |
| FLANGE outstand limits $c/t_f$<br>H or I Section, partially encased, with connection of concrete to web as in Figure 57 b) or by welded studs.<br>EN1994-1-1:2004 Table 5.2 | 20 $\varepsilon$ | 14 $\varepsilon$ | 9 $\varepsilon$ |
| FLANGE outstand limits $c/t_f$<br>H or I Section, partially encased + straight links as in Figure 57 a) placed with $s/c \leq 0{,}5$<br>EN1998-1-1:2004 | 30 $\varepsilon$ | 21 $\varepsilon$ | 13,5 $\varepsilon$ |
| FLANGE outstand limits $c/t_f$<br>H or I Section, fully encased + hoops placed with $s/c \leq 0{,}5$<br>EN1998-1-1:2004 | 30 $\varepsilon$ | 21 $\varepsilon$ | 13,5 $\varepsilon$ |
| WEB depth to thickness limit $c_w/t_w$<br>$c_w/t_w = h - 2t_f$<br>Reference: H or I Section, in steel only, web completely in compression<br>EN1993-1-1:2004 Table 5.2 | 42 $\varepsilon$ | 38 $\varepsilon$ | 33 $\varepsilon$ |
| WEB depth to thickness limit $c_w/t_w$<br>H or I Section, web completely in compression, section partially encased with connection of concrete to web or fully encased with hoops.<br>EN1993-1-1:2004 Table 5.2,<br>EN1994-1-1, cl.5.5.3(3) | 38 $\varepsilon$ | 38 $\varepsilon$ | 33 $\varepsilon$ |

note: $\varepsilon = (f_y/235)^{0.5}$ with $f_y$ in MPa

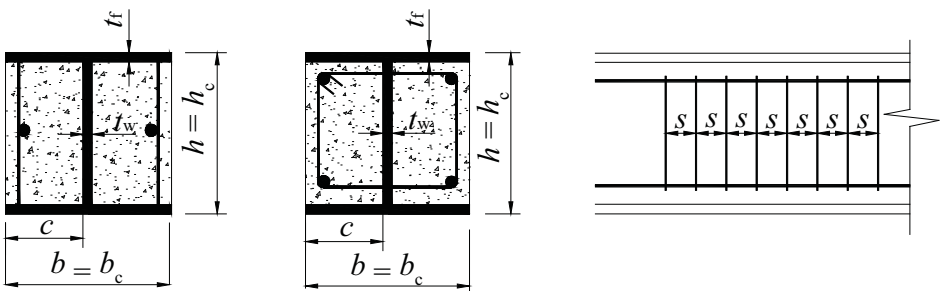


a) b) c)

**Figure 58**
Partially encased sections.

a) Additional straight bars (links) welded to the flanges.
b) Concrete connected to the web of the steel section by means of welded stirrups.
c) Steps s of the stirrups.

www.EngineeringEbooksPdf.com

## General rules for the design of dissipative and non dissipative elements

An earthquake resistant structure is designed in order to achieve a global plastic mechanism involving local dissipative zones. The mechanism identifies the members in which dissipative zones are located, and therefore indirectly the members in which there are no dissipative zones. Columns can be designed to be dissipative in regions where the global mechanism indicates that plastic deformations will take place, for example in moment frames at the:

- bases of all types of columns at ground level
- tops of columns in the upper storey

Specific rules apply to these zones, as well as to other regions of the columns in which uncertainties exist, for example at the top and bottom of any storey with fully encased columns (these are the 'critical zones' of reinforced concrete structures). In such 'critical zones' confining reinforcement is required for both dissipative and non dissipative columns. In the design of both types of composite column the resistance in bending of the steel section may be considered either alone or combined with the resistance of the concrete section.

When the concrete encasement or infill is assumed to contribute to the axial and/or flexural resistance of a non dissipative column, the design rules for dissipative columns that are intended to ensure full shear transfer between the concrete and the steel parts in a section should nevertheless be applied. However, because of the cyclic character of seismic action effects, it is necessary to consider reduced design shear resistances in order to ensure the effectiveness of the transmission of forces; they are obtained by dividing by 2 the shear resistances indicated in Eurocode 4.

When, for capacity design purposes, the full composite resistance of a column is employed, complete shear transfer between the steel and reinforced concrete parts should be ensured. If insufficient shear transfer is achieved through bond and friction, shear connectors should be provided to ensure full composite action. In essentially axially loaded non dissipative members, sufficient shear transfer should be provided to ensure that the steel and concrete parts share the loads applied to the column at connections to beams and bracing members.

In the design of non dissipative composite columns, the resistance in shear of the steel section may be considered either alone or combined with the resistance in shear of the concrete section. In this latter case it should be determined according to Eurocode 4. In dissipative members, the shear resistance should be determined considering the steel section alone, unless special details are provided to mobilise the shear resistance of the concrete encasement.

For fully encased columns that are assumed to act compositely, the minimum cross-sectional dimensions b and h should be not less than 250 mm.

## Anchorage and splices of reinforcement bars

The following requirements apply to reinforcing bars used for both earthquake resistant reinforced concrete structures and composite structures. For hoops used as transverse reinforcement in beams, columns or walls, closed stirrups with 135° hooks and extensions 10 $d_{bw}$ in length should be used, $d_{bw}$ being the diameter of the transverse reinforcement. Figure 59.
In DCH structures, the anchorage length of beam or column bars anchored within beam to column joints should be measured from a point on the bar at a distance $5d_{bL}$ inside the face of the joint, to take into account yield penetration due to cyclic post-elastic deformations. $d_{bL}$ is the diameter of longitudinal reinforcement.
When calculating the anchorage or lap length of column bars which contribute to the flexural strength of elements in critical regions, the ratio of the required area of reinforcement to the actual area of reinforcement $A_{s,req}/A_{s,prov}$ should be assumed to be 1,0. If, in the seismic design situation, the axial force in a column is tensile, the anchorage lengths should be increased to 50% longer than those specified in Eurocode 2.



www.EngineeringEbooksPdf.com

## Fully encased composite columns

In dissipative structures, there are critical regions at both ends of all column 'clear lengths' in moment frames, and in the portions of columns adjacent to links in eccentrically braced frames. The lengths $l_{cr}$ of these critical regions (in metres) are:

$l_{cr} = \max\{h_c;\ l_{cl}/6;\ 0{,}45\text{m}\}$ ductility class M

$l_{cr} = \max\{1{,}5h_c;\ l_{cl}/6;\ 0{,}6\text{m}\}$ ductility class H

Where $h_c$ is the largest cross-sectional dimension of the column – Figure 59 - and $l_{cl}$ is the 'clear length' of the column.

To satisfy plastic rotation demands and to compensate for loss of resistance due to spalling of the cover concrete, the following expression should be satisfied within the critical regions:

$$\alpha\,\omega_{wd} \geq 30 \cdot \mu_\phi \cdot \nu_d \cdot \varepsilon_{sy,d} \cdot \frac{b_c}{b_o} - 0{,}035$$

$$\nu_d = N_{Ed}/N_{pl,Rd} = N_{Ed}/(A_a f_{yd} + A_c f_{cd} + A_s f_{sd})$$

Where $\omega\, w_d$ is the mechanical volumetric ratio of the confining hoops within the critical regions, defined as:

$$\left[\omega_{wd} = \frac{\text{volume of confining hoops}}{\text{volume of concrete core}} \cdot \frac{f_{yd}}{f_{cd}}\right]$$

$\mu_\varphi$ is the required value of the curvature ductility factor; $\varepsilon_{sy,d}$ is the design value of the tension steel strain at yield; $h_c$ is the gross cross-sectional depth (parallel to the horizontal direction in which the $\mu_\varphi$ applies); $h_o$ is the depth of the confined core (to the centreline of the hoops); $b_c$ is the gross cross-sectional width; $b_o$ is the width of the confined core (to the centreline of the hoops). The symbols $h_o$, $h_c$, $b_o$, $b_c$ are defined at Figure 59.

$A_c$ is the area of the section of concrete; $A_s$ is the area of the longitudinal rebars; $A_a$ is the area of the steel profile; $f_{cd}$ is the concrete design strength; $f_{yd}$ is the design yield strength of the profile; $f_{ys}$ is the design yield strength of the rebars; $\alpha$ is the confinement effectiveness factor, which is equal to $\alpha = \alpha_n \cdot \alpha_s$, with:

For rectangular cross-sections:

$$\alpha_n = 1 - \sum_{n} b_i^2 / 6 b_o h_o$$

$$\alpha_s = (1 - s/2b_o)(1 - s/2h_o)$$

$n$ is the total number of longitudinal bars laterally engaged by hoops or cross ties and $b_i$ is the distance between consecutive engaged bars.

The spacing $s$ of confining hoops in critical regions should not exceed

$s = \min(b_o/2, 260, 9\, d_{bL})$ mm for ductility class DCM

$s = \min(b_o/2, 175, 8\, d_{bL})$ mm for ductility class DCH

The spacing s of confining hoops in the lower part of the lower storey for ductility class DCH should not exceed:

$s = \min(b_o/2, 150, 6 d_{bL})$

where $d_{bL}$ is the minimum diameter of the longitudinal re-bars.

The diameter of the hoops $d_{bw}$ should be at least

$d_{bw} = 6$ mm for ductility class DCM

$d_{bw} = \max(0{,}35\, d_{bL,max}[f_{ydL}/f_{ydw}]^{0,5}, 6)$ mm for ductility class DCH

$d_{bL,max}$ is the maximum diameter of the longitudinal re-bars. $f_{ydL}$ et $f_{ydw}$ respectively the design yield strength of the longitudinal and transverse reinforcement.

In critical regions, the distance between consecutive longitudinal bars restrained by hoops or cross-ties should not exceed 250 mm for ductility class DCM, or 200 mm for ductility class DCH.

In the bottom two storeys of a building, hoops in accordance with the indications above should be provided beyond the critical regions for an additional length equal to half the length of the critical regions.

The diameter dbw of confining hoops used to prevent flange buckling should be not less than

$$d_{bw} = \left[(b \cdot t_f / 8)(f_{ydf} / f_{ydw})\right]^{0,5}$$

in which b and $t_f$ are the width and thickness of the flange and $f_{ydf}$ and $f_{ydw}$ are the design yield strengths of the flange and reinforcement.

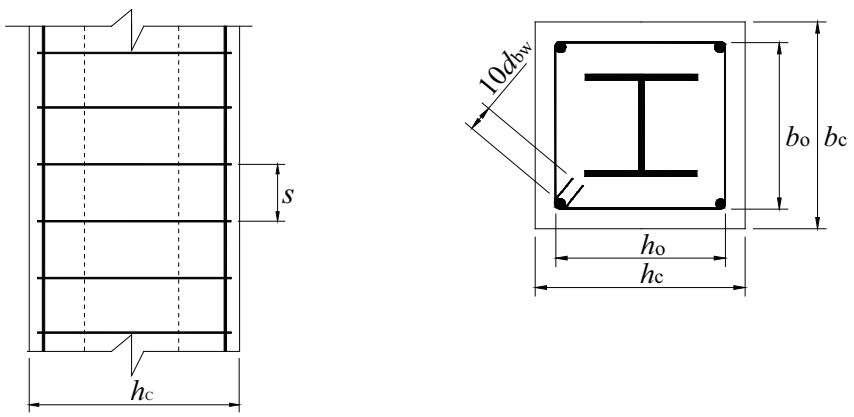


**Figure 59**
Definition of symbols for fully encased composite column.

www.EngineeringEbooksPdf.com

## Partially encased members

In zones where energy is dissipated by plastic bending of a composite section, the longitudinal spacing of the transverse reinforcement s should satisfy:

$s = \min(b_o/2, 260, 9\, d_{bL})$ mm

for ductility class DCM

$s = \min(b_o/2, 175, 8\, d_{bL})$ mm

for ductility class DCH

on a length greater or equal to:

- $l_{cr}$ for dissipative zones at the end of a member
- $2l_{cr}$ for dissipative zones within a member.

As previously explained, straight links welded to the inside of the flanges as shown in Figure 58a), in addition to the reinforcement required by Eurocode 4, can delay local buckling in the dissipative zones. The diameter dbw of the additional straight links should be a minimum 6 mm or

$$d_{\mathrm{bw}} = \left[(b \cdot t_{\mathrm{f}} / 8)(f_{\mathrm{ydf}} / f_{\mathrm{ydw}})\right]^{0,5}$$

in which b and $t_f$ are the width and thickness of the flange and $f_{ydf}$ and $f_{ydw}$ are the design yield strengths of the flange and reinforcement.

The additional straight links should be welded to the flanges at both ends, and the capacity of the welds should be not less than the tensile yield strength of the links. A clear concrete cover of between 20 mm and 40 mm should be provided to these links.

The design of partially-encased members in which only the steel section is assumed to contribute to member resistance may be carried out as for steel structures, although the capacity design should consider the entire composite section, as explained previously.

## Steel beams composite with a slab

Beams intended to behave as composite elements in dissipative zones of an earthquake resistant structure may be designed for full or partial shear connection, although the minimum degree of connection $\eta$ (as defined in Eurocode 4) should not be less than 0,8 and the total resistance of the shear connectors within any hogging moment region should be not less than the plastic resistance of the reinforcement. Because of the cyclic character of earthquake action effects which can cause a degradation of concrete around the connectors or excessive bending of the connectors, it is necessary to consider reduced design strength for the connectors in dissipative zones. This reduced design resistance of the connectors is that of Eurocode 4 multiplied by a factor of 0,75. Full shear connection is required when non-ductile connectors are used. The minimum thickness of concrete poured on site, assumed in the design to act as a structural diaphragm, is 70 mm.

When profiled steel sheeting with ribs transverse to the supporting beam is used and the "waves" in those sheeting are characterised by angle α, as defined at Figure 60, between 10° et 80°, the concrete tends to be pushed up by the shear force, which correspond to additional effects on the head of the connectors and which can generate a brittle failure of the concrete around those connectors. In order to avoid this detrimental effect, it is prescribed in Eurocode 8 that the reduction factor $k_t$ for the design shear resistance of the connectors given by Eurocode 4 should be further reduced by a rib shape efficiency factor $k_r$ (see Figure 60).

**Figure 60**
Values of the rib shape efficiency factor $k_r$.

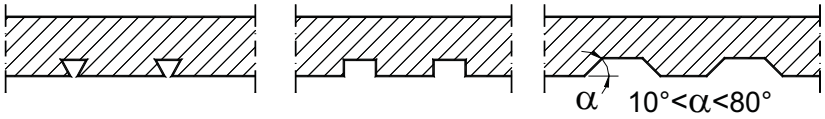


$k_r = 1$ $k_r = 1$ $k_r = 0,8$



www.EngineeringEbooksPdf.com

Ductility in plastic hinges is achieved by designing the section such that the ratio $x/d$ is limited to the values indicated at Table 14.

In the dissipative zones of beams, specific ductile steel reinforcement of the slab, 'seismic re-bars' (see Figure 61), should be placed in the connection zone. Detailed design guidance is given in Annex C of Eurocode 8 [1][17].

## Effective width of slab

The total effective width $b_{eff}$ of concrete flange associated with each steel beam should be taken as the sum of the partial effective widths $b_{e1}$ and $b_{e2}$ on either side of the centreline of the steel web (Figure 62). The partial effective width on each side should be taken as $b_e$, given in Table 16, but not greater than the available widths $b_1$ and $b_2$.

The available width $b$ of each portion should be taken as half the distance from the web of the beam being considered to the adjacent web, except that at a free edge the actual width is the distance from the web to the free edge.

**Figure 62**
Definition of effective widths $b_{e1}$, $b_{e2}$ and $b_{eff}$

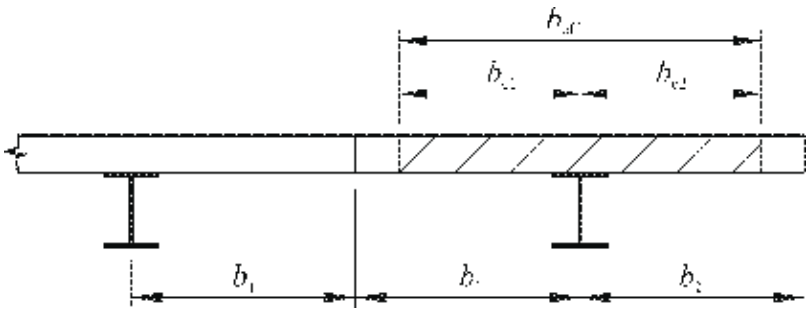

**Figure 61**
Layout of 'seismic re-bars'

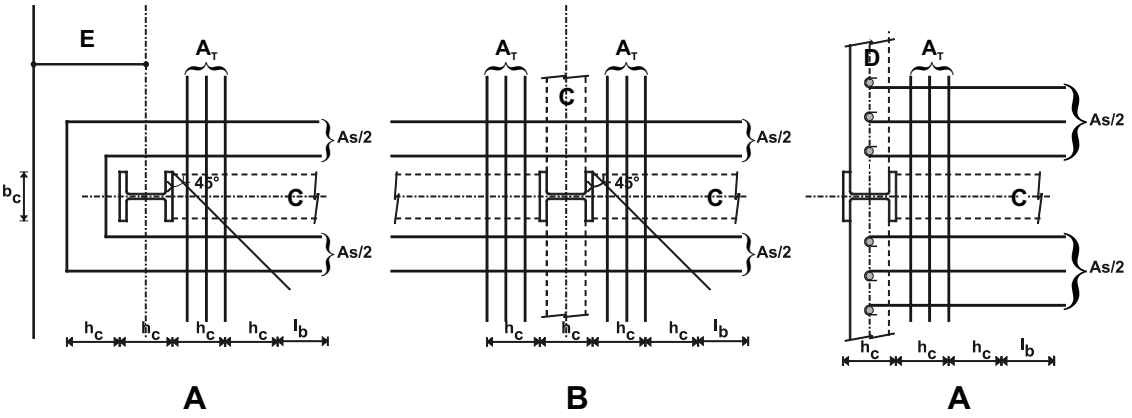


A Exterior Node

B Interior Node

A Exterior Node

C Steel beam D Façade steel beam
E Reinforced concrete cantilever edge strip

www.EngineeringEbooksPdf.com

The partial effective widths $b_e$ of the slab to be used in the determination of the elastic and plastic properties of the composite beam (T section comprising a steel beam connected to a slab forming a concrete flange) are defined in Tables 16 and 17 and at Figures 62 and 63. These values of the partial effective widths $b_e$ are valid for beams positioned as shown for beams C in Figure 63, and if the design of the slab reinforcement and of the connection of the slab to the steel beam and column are in accordance with Annex C of Eurocode 8. In Table 16, those moments which induce compression in the slab are considered as positive and those which induce tension in the slab are considered as negative.

Symbols $b_b$, $b_e$, $b_{eff}$ and $l$ used in Tables 16 and 17 are defined in Figures 62 and 63. $h_c$ is the depth of the column section. $b_b$ is the bearing width of the slab concrete on the column in the horizontal direction, perpendicular to the beam for which the effective width is determined. This bearing width may include additional details aimed at increasing the bearing capacity, like the additional plates sketched as Detail 4 at Figure 63.

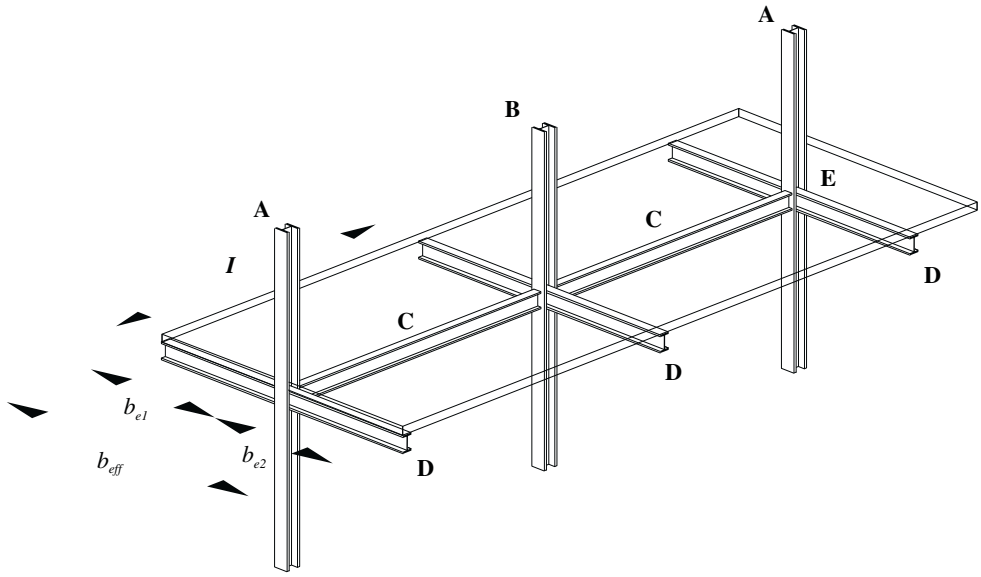


**Figure 63**
Definition of elements in moment frames.

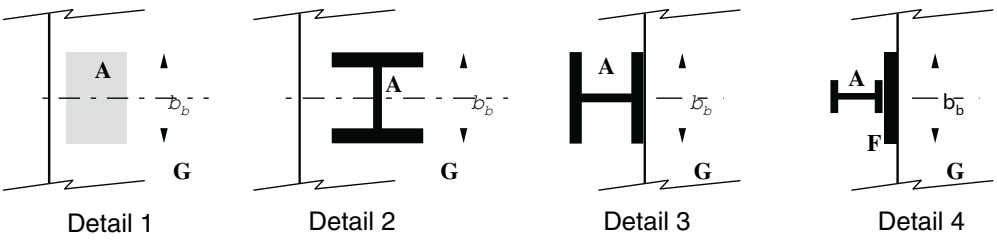


A: Exterior column
B: Interior column
C: Longitudinal beam
D: Transverse beam or steel façade beam
E: Cantilever concrete edge strip
F: Extended bearing
G: Concrete slab



www.EngineeringEbooksPdf.com

| $b_e$ | Transverse element | $b_e$ for $I$ (Elastic Analysis) |
|---|---|---|
| At interior column | Present or not present | For negative $M$ : 0,05 $I$ |
| At exterior column | Present | For positive $M$ : 0,0375 $I$ |
| At exterior column | Not present,<br>or re-bars not anchored | For negative $M$ : 0<br>For positive $M$ : 0,025 $I$ |

**Table 16**
Partial effective width $b_e$ of slab for the computation of the second moment of area I used in the elastic analysis of the structure.

| Sign of bending moment $M$ | Location | Transverse element | $b_e$ for $M_{Rd}$ (Plastic resistance) |
|---|---|---|---|
| Negative $M$ | Interior column | Seismic re-bars | 0,1 $I$ |
| Negative $M$ | Exterior column | All layouts with re-bars anchored to façade beam or to concrete cantilever edge strip | 0,1 $I$ |
| Negative $M$ | Exterior column | All layouts with re-bars not anchored to façade beam or to concrete cantilever edge strip | 0,0 |
| Positive $M$ | Interior column | Seismic re-bars | 0,075 $I$ |
| Positive $M$ | Exterior column | Steel transverse beam with connectors Concrete slab up to exterior face of column of H section with strong axis oriented as in Figure 63 or beyond (concrete edge strip). Seismic re-bars. | 0,075 $I$ |
| Positive $M$ | Exterior column | No steel transverse beam or steel transverse beam without connectors. Concrete slab up to exterior face of column of H section with strong axis oriented as in Figure 63, or beyond (edge strip). Seismic re-bars | $b_b/2 + 0{,}7\ h_c/2$ |
| Positive $M$ | Exterior column | All other layouts. Seismic re-bars | $b_b/2 \leq b_{e,max}$<br>$b_{e,max} = 0{,}05l$ |

**Table 17**
Partial effective width $b_e$ of slab for evaluation of plastic moment resistance.

www.EngineeringEbooksPdf.com

# 15. COMPOSITE STEEL CONCRETE MOMENT RESISTING FRAMES

Design objective.

A basic choice; the degree of composite 'character'.

Analysis.



www.EngineeringEbooksPdf.com

## Design objective

The global design objective for dissipative composite steel concrete moment resisting frames is to form plastic hinges in the beams, or in their connections to the columns, but not in the columns themselves. This is the same as for pure steel structures, and the aimed for global mechanism is often called a 'weak beam-strong column' or WBSC solution (see Figure 25a)). Such a design does however allow plastic hinges to form in the columns at the base of the frame, and at the top of the columns in the uppermost storey. The design should be such that plastic rotation capacity at the beam ends is at least 25 mrad for ductility class DCM, and 35 mrad for ductility class DCH.

## A basic choice; the degree of composite 'character'

In moment resisting frames, dissipative zones are normally formed at the beam ends. Two design options exist to achieve ductility in those zones:

1. form ductile composite dissipative zones, by satisfying certain conditions concerning seismic re-bars, etc
2. use only the steel sections for the beam end dissipative zones

The second option simplifies the design, but the real structure must correctly reflect the model used in the analysis. There must be an effective disconnection of the slabs from the steel sections. If the disconnection is not effective, the real stiffness of the structure will have been underestimated by the model, as will therefore the earthquake action effects given that pseudo acceleration increases with stiffness. Also, the capacity design of columns will have been based on an underestimation of the beam plastic resistance, leading to an underestimation of the design forces in the columns.

An effective disconnection between steel and concrete may be realised if there is no contact between the slabs and any vertical side of a steel element (columns, shear connectors, connecting plates, corrugated flanges, omega steel deck nailed to the flange of steel sections etc) within a circular zone around each column of diameter $2b_{eff}$. $b_{eff}$ is the greater of the effective width of the beams connected to that column.

## Analysis

For beams, two different forms of flexural stiffness should be taken into account in the analysis:

- $EI_1$ for the parts of spans subjected to positive (sagging) bending (un-cracked section)
- $EI_2$ for the parts of spans subjected to negative (hogging) bending (cracked section).

Alternatively, the analysis may be performed assuming an equivalent second moment of area Ieq which is constant over the entire span:
$I_{eq} = 0{,}6\ I_1 + 0{,}4\ I_2$

For composite columns, the flexural stiffness is given by:
$(EI)_c = 0{,}9(\ EI_a + r\ E_{cm}\ I_c + E\ I_s\ )$
$E$ and $E_{cm}$ are the modulus of elasticity for the steel and concrete respectively; $r$ is a reduction factor that is a function of the type of column cross-section and has a recommended value of $r = 0{,}5$. $I_a$, $I_c$ and $I_s$ denote the second moments of area of the steel section, the concrete and the re-bars respectively.
Beams should be checked for lateral and lateral torsional buckling in accordance with Eurocode 4, assuming the presence of a negative plastic moment at one end of the beam.

Composite trusses should not be used as dissipative beams.

In columns where plastic hinges will form, it should be assumed that $M_{pl,Rd}$ will occur in these hinges. The following expression should apply for all composite columns:
$N_{Ed}/N_{pl,Rd} < 0{,}30$

www.EngineeringEbooksPdf.com

# 16. COMPOSITE STEEL-CONCRETE BRACED FRAMES

Composite frames with concentric bracing.
Composite frames with eccentric bracing.



www.EngineeringEbooksPdf.com

## Composite frames with concentric bracing

The non-dissipative structural elements, namely the beams and columns, can be either steel alone or composite steel-concrete. However, the dissipative elements, namely the braces, have to be structural steel alone. There are two reasons behind this requirement:

- prior to their buckling, composite braces would tend to overload the beams and columns,
- composite braces have not been the subject of indepth study and consequently there are uncertainties with regard to their cyclic behaviour in both tension and compression.

The design procedure for the braces is identical to that for steel concentrically braced frames.

## Composite frames with eccentric bracing

In principle, it would be possible to use composite elements for all frame members. However, there are some uncertainties associated with composite elements that make them unacceptable for use is the dissipative zones of eccentrically braced frames, where large deformations are needed (rotations up to say 80 mrad). An underestimated 'link' capacity would lead to an under-design of the braces and columns and possibly to their failure. The gap in knowledge is similar concerning the 'disconnection' of the slab in these areas, making it difficult to evaluate 'links' working in bending in composite beam elements. For this reason composite frames with eccentric bracing are designed such that the dissipative behaviour occurs essentially through yielding in shear of the links. All other members should remain elastic and failure of the connections should be prevented.

The behaviour of horizontal beam links which yield in shear can be well predicted, because the contribution of the slab in tension to the shear resistance is negligible. This means that such links should be either short or of intermediate length, with a maximum length e equal to:

- when plastic hinges would form at both ends: $e = 2M_{p,\,link}/\ V_{p,\,link}$.
- when a plastic hinge would form at only one end: $e < M_{p,\,link}/\ V_{p,\,link}$

The definitions of $M_{p,link}$ and $V_{p,link}$ are given in 13. For $M_{p,link}$, only the steel part of the link section is taken into account in the evaluation.

The links may not be formed from encased steel sections, because of uncertainties about the contribution of the concrete to shear resistance. Figure 64. As for moment resisting frames, the analysis of the structure has to consider two different stiffness for the zones under sagging and hogging moments. Vertical steel links are also acceptable.

www.EngineeringEbooksPdf.com

Specific construction details shown at Figure 64 should be realised for:

- face bearing plates for links framing into reinforced concrete columns (similar to those defined for connections in Section 14).
- transverse reinforcement in 'critical regions' of fully encased composite columns adjacent to links.

Besides these aspects, the philosophy for the design of composite eccentrically braced frames is similar to that for steel eccentrically braced frames presented in Section 13.

**Figure 64**
Detail of zone T, beam – column – link connection zone in a composite frame with eccentric bracings.

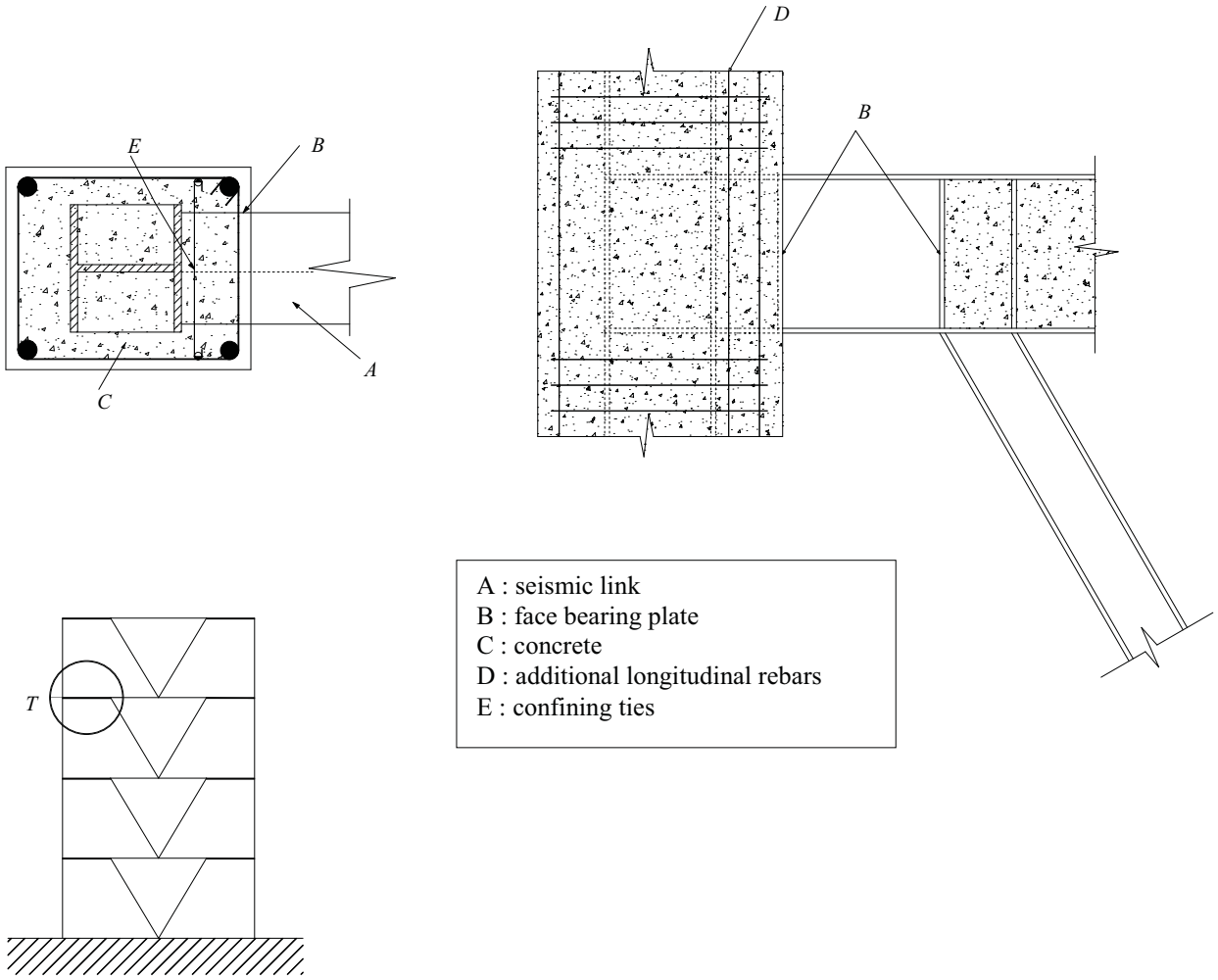




www.EngineeringEbooksPdf.com

# 17. COMPOSITE STEEL-CONCRETE WALLS AND SYSTEMS WITH WALLS

Definition of the various composite wall systems and the design objectives.

Analysis.

Detailing rules for composite walls of ductility class DCM.

Detailing rules for coupling beams of ductility class DCM.

Additional detailing rules for ductility class DCH.

Composite steel plate shear walls.

www.EngineeringEbooksPdf.com

## Definition of the various composite wall systems and their design objectives

Composite wall systems, when properly designed, have shear strength and stiffness comparable to those of pure reinforced concrete shear wall systems. The structural steel sections in the boundary members do however increase the flexural resistance of the wall and delay the onset of flexural plastic hinges in tall walls. As for reinforced concrete structures, two levels of ductility and two values of the behaviour factor are defined for dissipative walls, depending on the requirements of the detailing rules.

Structural Type 1 and 2 solutions (Figure 54 and 65) are designed to behave as shear walls and dissipate energy in both the vertical steel sections and in the vertical reinforcing bars. Structural Type 3 solutions (Figure 54) are designed to dissipate energy in the shear walls and in the coupling beams.

Composite steel plate shear walls are designed to yield through shear of the steel plate.

## Analysis

The analysis of the structure is based on section properties defined for concrete walls and for composite beams. In structural systems of Type 1 or Type 2, when vertical fully encased (or partially encased) structural steel sections act as the boundary members of reinforced concrete infill panels, the analysis should be made assuming that the seismic action effects in these boundary members are axial forces only. These axial forces should be determined assuming that the shear forces are carried by the reinforced concrete wall, and that the entire gravity and overturning forces are carried by the concrete shear wall acting compositely with the vertical boundary members.

In structural systems of Type 3, if composite coupling beams are used, two different forms of flexural stiffness should be taken into account in the analysis ,(as explained for beams in moment resisting frames in 15).

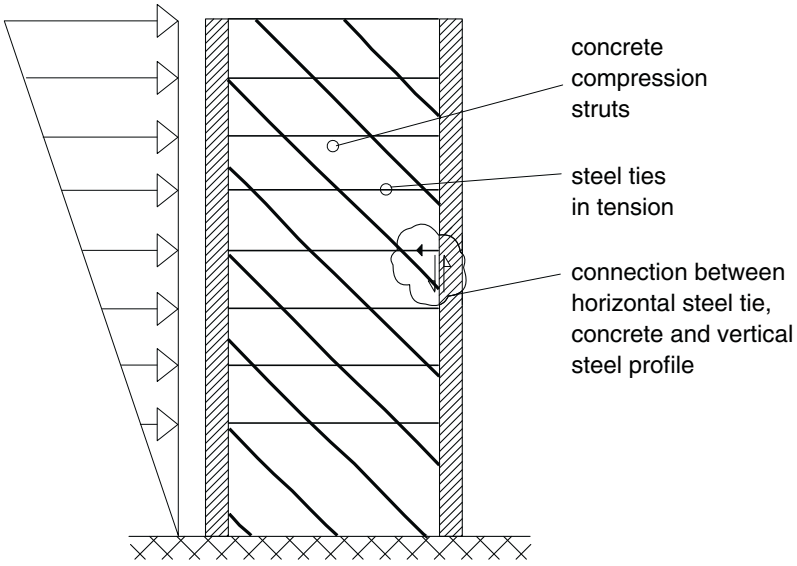


**Figure 65**
Mechanical behaviour of shear walls, Type 1 and 2 solutions.



www.EngineeringEbooksPdf.com

## Detailing rules for composite walls of ductility class DCM

The reinforced concrete infill panels in Type 1 systems, and the reinforced concrete walls in Types 2 and 3, should meet the requirements for reinforced concrete wall of class DCM. Partially encased steel sections used as boundary members of the reinforced concrete panels should belong to a class of cross-section related to the behaviour factor of the structure, as indicated in Table 13. Fully encased and partially encased steel sections used as boundary members in reinforced concrete panels are designed as explained in 15.

Headed shear studs or tie reinforcement (which should be either welded to the steel member, anchored through holes in it, or anchored around it) should be provided to transfer vertical and horizontal shear forces between the structural steel of the boundary elements and the reinforced concrete.

**Figure 66**
Details of partially encased composite boundary element; transverse reinforcement for ductility class DCH.

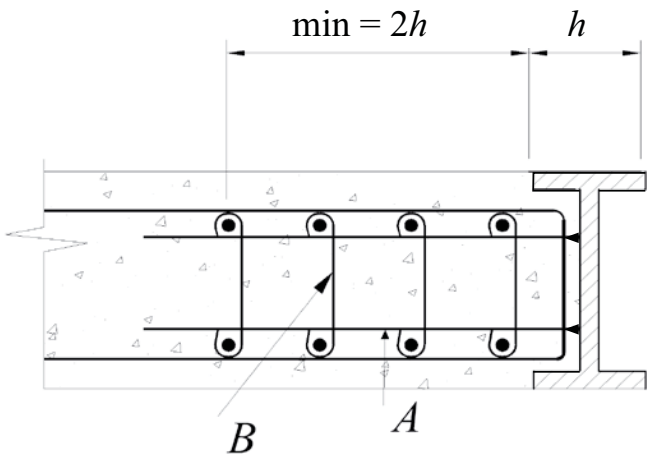


**Figure 67**
Details of fully encased composite boundary element; details of transverse reinforcement for ductility class DCH.

A: bars welded to column
B: transverse reinforcement
C: shear connectors
D: cross tie

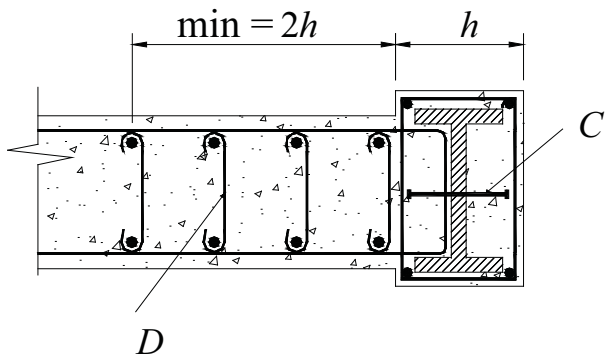


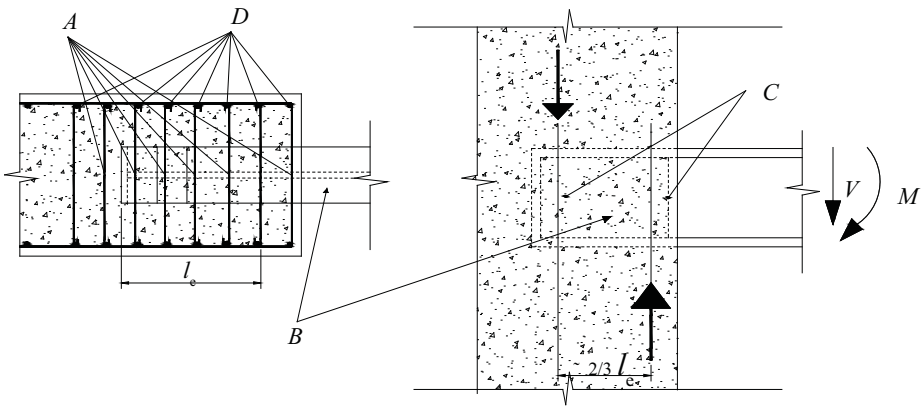


**Figure 68**
Details of coupling beam framing into a wall; detail for ductility class DCH.

A: Additional wall confining ties at embedment of steel beam
B: Steel coupling beam;
C: Face bearing plates;
D: vertical reinforcement.

www.EngineeringEbooksPdf.com

## Detailing rules for coupling beams of ductility class DCM

The "Detailing rules for composite connections in dissipative zones" presented in 14. apply. When a dissipative steel or composite beam frames into a reinforced concrete wall (see Figure 68), it is necessary to realise the transfer of bending moment and shear present at beam end into the column, which is realised by a couple of vertical reaction forces into the wall. To maintain the integrity of the concrete, the following should be checked:

- the wall should have the capacity to bear locally those forces without crushing, which can require confining reinforcement in the wall and a sufficient embedment length of the beam into the wall. A longer embedment length reduces the reaction forces and allows the wall to better resist the most adverse combination of moment and shear applied by the beam. That combination has to consider as applied forces the plastic moment resistance $M_{pl,Rd}$ and the plastic shear resistance $V_{Ed}$ of the beam, which are the action effects in the global plastic mechanism. The embedment length $l_e$ should be assumed to begin inside the first layer of confining reinforcement in the wall boundary member (see Figure 68) and should not be less than 1,5 times the depth of the coupling beam. Confining hoops or bars forming hoops placed horizontally are not compulsory in class DCM, but may be required over the embedment length by design checks.
- the wall should have the capacity to resist locally to the tension mobilised by those vertical forces, which requires vertical reinforcements. Indeed, because of the reversal of plastic moments at beam end under seismic action, the reaction forces are successively oriented upwards and downwards, which can put the wall in tension. For this reason, Eurocode 8 prescribes that vertical wall reinforcement, with a design axial strength equal to the shear strength of the coupling beam, should be placed over the embedment length of the beam, with two-thirds of the steel located over the first half of this length. This wall reinforcement should extend a distance of at least one anchorage length above and below the flanges of the coupling beam. It is acceptable to consider vertical reinforcement that is present for other purposes as part of the contribution to this requirement.

To ensure the correct behaviour of the beam and the concrete at the support, stiffeners of the steel beam are required in the plane of the exterior concrete face. Installed at that place, those stiffeners, also called "face bearing plates", contribute to the confinement of the concrete. Figures 56 et 68.



www.EngineeringEbooksPdf.com

## Additional detailing rules for ductility class DCH

Transverse reinforcement should be used for confinement of the composite boundary zones of the wall, be they partially or fully encased. This reinforcement should extend a distance 2*h* into the concrete walls, where h is the depth of the boundary element in the plane of the wall (see Figures 66 and 67). The requirements for the seismic links in frames with eccentric bracing also apply to the coupling beams.

## Composite steel plate shear walls

Composite steel plate shear walls are designed to yield through shearing of the plate itself, which should be stiffened by concrete encasement on one or both sides. The concrete thickness should not be less than 200 mm when it is provided on one side and 100 mm when on both sides, with a minimum reinforcement ratio of 0,25% in both directions. The encasement must be suitably attached in order to prevent buckling of steel.

The analysis of the structure should be based on the material and section properties defined in 14. Checks should be made that: $V_{Rd} \geq V_{Ed}$
The shear resistance $V_{Rd}$ is given by:

$$V_{\mathrm{Rd}} = A_{\mathrm{pl}} \times f_{\mathrm{yd}} / \sqrt{3}$$

where $f_{yd}$ is the design yield strength of the plate and $A_{pl}$ is the horizontal area of the plate. The connections between the plate and the boundary members (columns and beams) as well as the connections between the plate and its concrete encasement, must be designed such that the full yield strength of the plate can be developed. The steel plate should be continuously connected on all its edges to structural steel boundary members with welds and/or bolts to develop the yield strength of the plate in shear. Openings in the steel plate should be stiffened as necessary.

www.EngineeringEbooksPdf.com

# 18. IMPROVING REINFORCED CONCRETE STRUCTURES BY INCORPORATING COMPOSITE COLUMNS

Problem definition and design conditions of composite columns.

Behaviour of composite columns subjected to compression and cyclic bending.



www.EngineeringEbooksPdf.com

## Definition of the problem

As an alternative to complete composite design of structures, an ArcelorMittal promoted research study has recently considered the use of 'local' composite elements in what remains essentially a reinforced concrete building in order to improve safety. The justification for this new development is explained below.

The most frequent failure mode of reinforced concrete (RC) moment frame buildings is a 'soft storey' mechanism in which failure takes place in the bottom storey of the building (Figure 69). This phenomenon is caused by the following factors:

- large openings present in the bottom storey but not elsewhere weaken the structure; openings are due to use of the ground floor level for offices, shops, lobby etc, with slender columns present;
- bending combined with compression results in the crushing of concrete;
- alternate inclined cracks due to shear result in de-cohesion of the concrete
- bending and shear of ground storey columns induces the collapse of the building

## Design of composite columns used to improve the behaviour of RC buildings

Research has demonstrated that composite columns in the lower levels of RC buildings do provide reliable shear, bending and compression resistance. Design criteria for encased steel members have been defined:

- the steel section alone should be able to resist the design axial force of the seismic loading case:
  $N_{Rd} > N_{Sd}\,(\gamma_g\ G + \gamma_q\ Q)$
  with $\gamma_g = 1$ and $\gamma_q = 0{,}3$
- the steel section alone should be able to compensate for the deficient concrete section under applied bending moment and shear at collapse:
  $M_{Rd,steel} > M_{Rd,concrete}$
  and $V_{Rd,steel} > V_{Rd,concrete}$
- the steel sections should not overly modify the local stiffnesses $EI$ of the RC columns, in order to maintain the stiffness of the original RC structure, as any increase in stiffness would mean an increase in the seismic forces, which is clearly not desirable.
- these criteria should be checked for both weak and strong axis bending.

Two designs for anchorage of the steel members into the concrete structure were tested; C1 with anchorage extending up to mid height of the second storey columns, and C2 with anchorage stopped within the depth of the first storey beams (Figure 70). Columns are assumed to be subject to constant compression and to alternate cyclic bending. The moment- rotation diagrams obtained show that composite columns provide significantly more resistance and ductility than the original reinforced concrete elements (Figure 71).

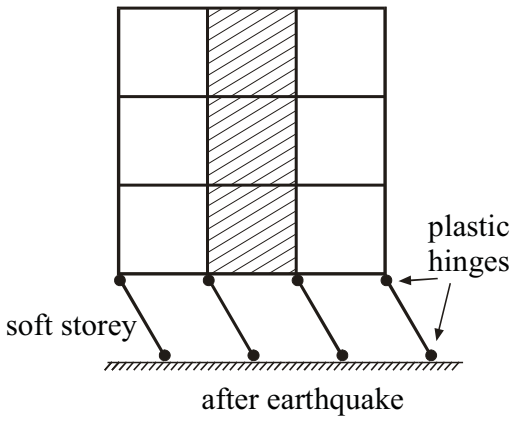


**Figure 69**
The 'soft storey' mechanism which composite columns can mitigate.

www.EngineeringEbooksPdf.com

## Behaviour of composite columns subjected to compression and cyclic bending

The conclusions of the aforementioned research were very positive for composite columns, which were shown to provide much more capacity to resist earthquakes than RC columns of the same dimensions. In summary;

- the full composite plastic moment resistance is developed ($M_{pl,exp} = M_{pl,thr}$)
- in dissipative zones, the shear resistance of a composite column is that of the steel profile.
- the rotation capacity $\theta_{comp}$ of a composite element, defined as the rotation at which the composite elements still present a resistance equal to the maximum resistance of an R.C. element, is on average two times greater than $\theta_{R.C.}$
- the composite elements resisted on average 1,5 times more cycles before the end of the test (corresponding to a 50% resistance drop) and dissipated on average 3 times more energy than the RC elements.
- there is no significant influence of the anchorage type (C1 or C2) on results, but this conclusion may result from the high strength of the concrete and have no general character.
- the stiffnesses of the reinforced concrete and composite elements are similar, as wished.
- the improvements due to using composite sections should be relatively greater for lower concrete strengths, but a C1 type of anchorage should be preferred in that case.

More technical details and design considerations are given in reference [12].

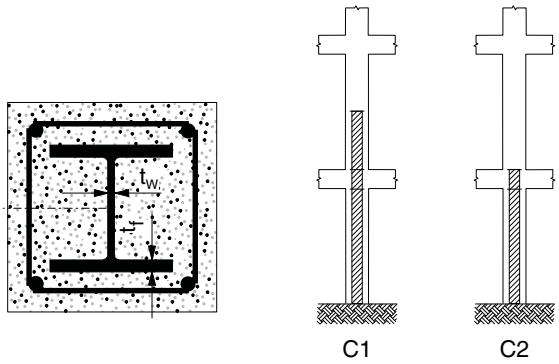


**Figure 70**
Left: Composite section. Right: Anchorage types C1 and C2.

**Figure 71**
Moment-Rotation curves showing the improved capacity of a composite column in comparison to the original reinforced concrete column.

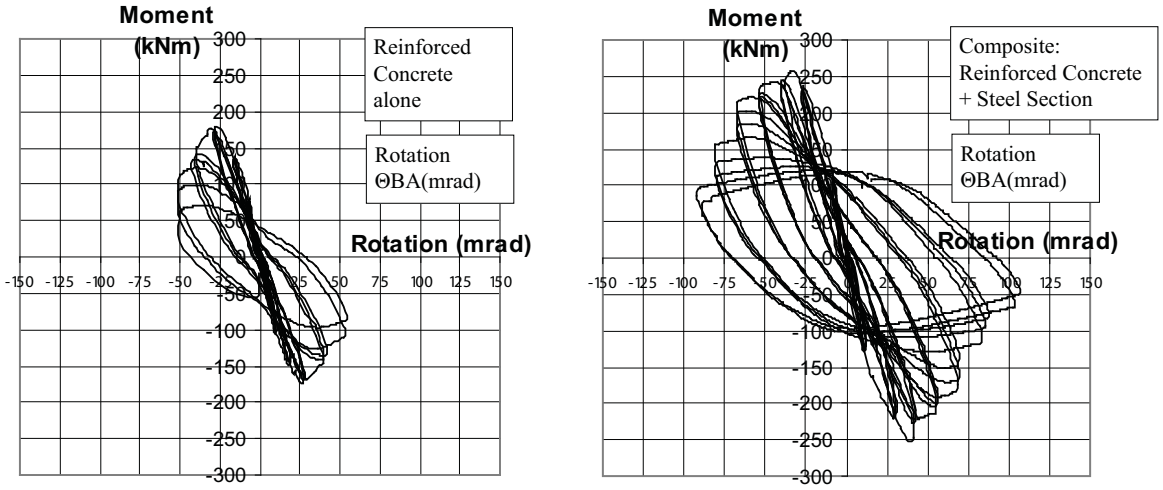




www.EngineeringEbooksPdf.com

# 19. DESIGN EXAMPLE

Presentation.
Checking moment resistance and deflection limits for beams.
Weak Beam-Strong Column checks.
Interior column.
Axial Compression check.
Plastic resistance in bending at basement level.
Evaluation of the seismic mass. Design spectrum.
Evaluation of seismic design shear by the 'lateral forces' method.
Gravity load to combine with earthquake effects.
Dynamic analysis by spectral response and modal superposition method.
Results of the analysis.
Design of beam to column connection at an interior joint in line X2.
Comments on design options.
Design of a reduced beam section.
Economy due to RBS.

www.EngineeringEbooksPdf.com

## Definition

The example presented here is a preliminary design of the building shown in Figure 72. The aim of this design is to obtain in a straightforward way, making certain approximations, 'sizes' for the structural elements which are close to a final design. Carrying out such a preliminary process is a normal step in seismic design, because the dynamic action effects are a function of the member stiffness which the designer is trying to determine, so iterations are inevitable. The example presented is thus an initial step. A more refined definition of the section sizes, complete 3D calculations etc, can only be made once the 'reasonable' design presented hereafter has proved its validity.

The example considers a building in which the seismic resistance is provided by both peripheral and interior moment resisting frames (MRF), in both the x and y directions. MRFs are known to be flexible structures and their design is often governed by the need to satisfy deformation criteria under service earthquake loading, or limitation of $P$-$\Delta$ effects under design earthquake loading. For this reason, rigid connections are preferred.

It is wise in a preliminary design to select sections that will satisfy, with some reserve, the design criteria under gravity loading alone, and to select a value below the maximum authorised one for the behaviour factor q. The maximum allowed is
$q = 5 \times \alpha_u / \alpha_1 = 5 \times 1{,}3 = 6{,}5$.
In order to quickly arrive at the final design a value of $q = 4$ will be chosen for the analysis.

The preliminary design consists of:

- Firstly define minimum beam sections, checking deflection and resistance criteria under gravity loading.
- Then follow an iterative process, going through the following steps until all design criteria are fulfilled.

The iterative process can make use of either the 'lateral force' method or the 'spectral response-modal superposition' method. If the 'lateral force' method is used, the calculation steps are:

1) selection of beam sections
2) definition of column sections checking the 'Weak Beam Strong Column' criteria
3) check compression/buckling resistance of columns at ground floor level under gravity loading
4) calculation of the seismic mass ($G + \psi_{Ei} Q$) of the structure
5) evaluation of the period of the structure by means of a code formula (see Section 7)
6) evaluation of the resultant base shear $F_b$ and distribution of $F_b$ into lateral forces
7) static analysis of one plane frame under 'lateral loads', magnified by a factor to take into account torsional effects
8) static analysis under gravity loading ($G + \psi_{Ei} Q$)
9) stability check, considering $P$-$\Delta$ effects (parameter $\theta$) in the seismic loading situation (in which the gravity loading is $G + \psi_{Ei} Q$)
10) deflection check under 'service' earthquake loading (a fraction of the design earthquake, generally 0,5)
11) static analysis under gravity loading ($G + \psi_{2i} Q$)
12) combination of action effects determined in step 7) and gravity loading determined in step 11).

If the 'spectral response-modal superposition' method is used, steps 5), 6) and 7) are replaced by:

5) 'spectral response-modal superposition' analysis of one plane frame to evaluate the earthquake action effects. Torsional effects are included by magnifying the design spectrum by the amplification factor $\delta$ as indicated in 7.

The 'spectral response-modal superposition' method is a dynamic analysis which allows several vibration modes to be taken into account.



www.EngineeringEbooksPdf.com

Both the 'lateral force' and the 'spectral response-modal superposition' methods are used below in order to compare the results of those methods in terms of fundamental period and base shear.

The site and building data are as follows:

- Seismic zone ; $a_{gR}$= 2,0 m/s$^2$
- Importance of the building; office building, $\gamma_I$=1,0 => $a_g$= 2,0 m/s$^2$
- Service load $Q$ = 3 kN/m$^2$
- Design spectrum; type 1
- Soil B => from code: $S$ = 1,2
  $T_B$ = 0,15s $T_C$ = 0,5s $T_D$ = 2s
- Behaviour factor: $q$ = 4

The building dimensions are shown in Figure 72. The orientation of the columns is chosen in order to have:

- a similar percentage of strong and weak axis column bending in both the x and y directions.
- columns presenting their strong axis where this is mostly needed in order to satisfy the 'weak beam-strong column' condition with respect to the deepest beams used in the structure, that is for the beams in the x direction (longer spans) at interior nodes.

**Figure 72**
Example structure for design.

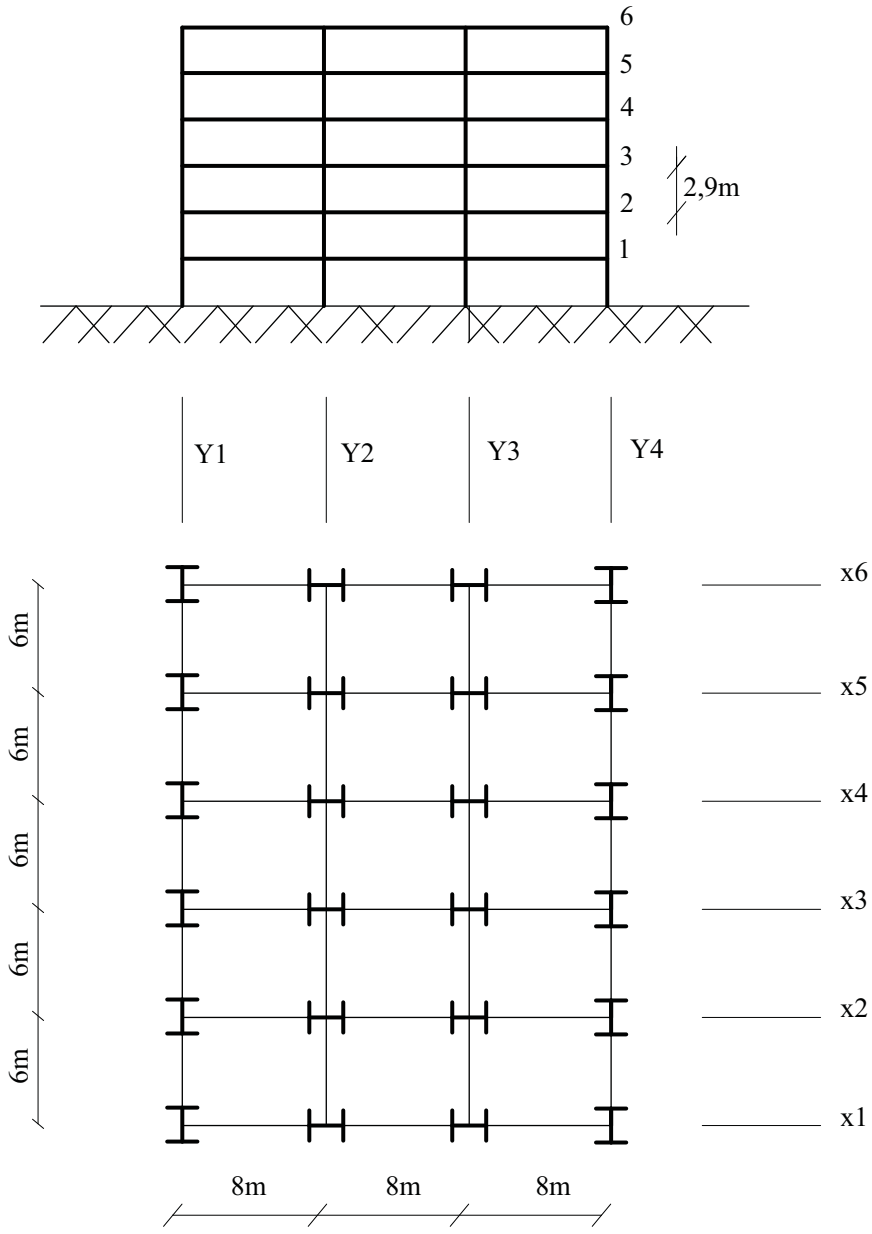


www.EngineeringEbooksPdf.com

# Beam sections; checking moment resistance and deflection limits

**Beams in x direction. Deflection check.**
Beams are assumed to be fixed
at both ends. Span l = 8m.
Frame on line X2 supports a width of floor = 6m
Floor weight is estimated at
5 kN/m$^2$, all included.
$G$ floor : 6m x 5 kN/ m$^2$ = 30 kN/ m
$G$ walls : 3 kN/ m
$Q$ service : 6m x 3 kN/ m$^2$ = 18 kN/ m
$G + Q$ = 30 + 3 + 18 = 51 kN/m
Deflection limit: f = $l$/300
under $G + Q$ = 51 kN/m
$f = pl^4 / 384\ EI = l/300$
=> $I_{required} = 300\ pl^3/384E$ = (300 x 51 x 83)
/(384 x 0,2 x 109)= 10199.10$^4$ mm$^4$
Minimum beam section in x direction:
IPE 330 ($I$ = 11770.10$^4$ mm$^4$)

**Beams in x direction.**
**Moment resistance check.**
1,35$G$ + 1,5$Q$ = 1,35 x 33 + 1,5 x 18
= 71,55 kN/m
Beams are assumed fixed at both ends:
$M_{Sd}$ = 71,55 x 82 / 12 = 381 kNm
$W_{pl,min}$ = 381.10$^6$ / 355 = 1075.10$^3$ mm$^3$
Minimum beam section in $x$ direction:
IPE 400 ($W_{pl}$ = 1702.103 mm$^3$)

**Beams in y direction. Deflection check.**
Beams are assumed fixed at
both ends. Span $l$ = 6m.
Frame on line Y2 supports a width of floor = 8m
$G$ floor : 8m x 5 kN/ m$^2$ = 40 kN/ m
$G$ walls : 3 kN/ m
$Q$ service : 8m x 3 kN/ m$^2$ = 24 kN/ m
$G + Q$ = 67 kN/m
Deflection limit: $l$/300 under $G+Q$ = 67 kN/m
$f = pl^4 / 384EI = l/300$
=> $I_{required} = 300\ pl^3/384E$
= (300 x 67 x 63 ) / (384 x 0,2 x 109 ) =
5653.10$^4$ mm$^4$
Minimum beam section in y direction:
IPE 270 ($I$ = 5790.104 mm$^4$)

**Beams in y direction. Moment resistance check**
1,35$G$ + 1,5$Q$ = 1,35 x 43 + 1,5 x 24 = 58 + 36 = 94,05 kN/m
Beams are assumed fixed at both ends: $M_{Sd}$ = 94,05 x 62 / 12 = 282 kNm
$W_{pl,min}$ = 282.106 / 355 = 795.103 mm$^3$
Minimum beam section in y direction: IPE 360 ($W_{pl}$ = 1019.103 mm$^3$)

**Conclusion.**
For gravity loading, minimum beam sections are:
- in direction x : IPE400 $W_{pl}$ = 1702.103 mm$^3$ $I$ =23130.104 mm$^4$
- in direction y : IPE360 $W_{pl}$ = 1019.103 mm$^3$ $I$ =16270.104 mm$^4$

Based on these minimum sizes needed to resist gravity loading the iterative procedure for sizing the beams and columns can begin. The calculations presented below correspond to the following (slightly greater) sizes of beams and columns:
- beam sections in direction x : IPE500 $I$ = 48200.104 mm$^4$ $W_{pl}$ = 2194.103 mm$^3$
- beam sections in direction y : IPEA450 $I$ = 29760.104 mm$^4$ $W_{pl}$ = 1494.103 mm3
- columns: HE340M: $I_{strong\ axis} = I_y$ = 76370.104 mm$^4$ $I_{weak\ axis} = I_z$ =19710.104 mm$^4$
$W_{pl,strong\ axis}$ = 4718.103 mm$^3$ $W_{pl,weak\ axis}$ = 1953.103 mm$^3$



www.EngineeringEbooksPdf.com

## 'Weak Beam-Strong Column' checks

The Weak Beam-Strong Column (WBSC) check is:

$$\sum M_{\mathrm{Rc}} \geq 1{,}3 \sum M_{\mathrm{Rb}}$$

That criterion can be expressed:

$$\sum f_{\mathrm{yd,column}} \times W_{\mathrm{pl,column}} \geq 1{,}3 \sum f_{\mathrm{yd,beams}} \times W_{\mathrm{pl,beams}}$$

Grade S355 steel is chosen for both the beams and columns, so the WBSC check becomes:

$$\sum W_{\mathrm{pl,\ columns}} \geq 1{,}3 \sum W_{\mathrm{pl,\ beams}}$$

At interior nodes there are 2 beams and 2 columns intersecting, so the WBSC check becomes:

$W_{pl,\ column} \geq 1{,}3\ W_{pl,\ beam}$

At exterior nodes, there is 1 beam and 2 columns intersecting so the WBSC check becomes:

$2\ W_{pl,\ column} \geq 1{,}3\ W_{pl,\ beam}$

**Interior node, line Y2.**

$W_{pl,\ column,weak\ axis} \geq 1{,}3\ W_{pl,IPEA450}$

- HE340M has $W_{pl,weakaxis} = 1953.10^3$ mm$^3$ > 1,3 x 1494.10$^3$=1942.103 mm$^3$

**Exterior node line Y2.**

$2\,W_{pl,\ column,weak\ axis} \geq 1{,}3\ W_{pl,IPEA450}$ is a less demanding check than that for the interior node, so is satisfied 'by inspection'.

**Line Y1.**

Columns are oriented such that the strong axis bending resistance of the HE340M sections is mobilised rather than the weak axis considered above, so the WBSC check is satisfied 'by inspection'.

**Interior node, line X2.**

$W_{pl,HE340M,strong\ axis} = 4718.10^3$ mm$^3$

$W_{pl,IPE500}$ x 1,3= 2194.10$^3$ x 1,3 = 2852.10$^3$ mm$^3$

4718.103 mm$^3$ > 2852.10$^3$ mm$^3$

=> WBSC condition satisfied.

**Exterior node, line X2.**

WBSC condition: $2\,W_{pl,}$ column,weak axis ≥ 1,3 $W_{pl,IPE500}$

2 $W_{pl,HE340M,weak\ axis}$ =1953 x 2 =3906.10$^3$ mm$^3$ > 1,3 $W_{pl,IPE500}$ =2194.10$^3$ x 1,3 =2852.10$^3$ mm$^3$

WBSC condition satisfied.

**Conclusion.**

Beam sections IPE500 in direction x and IPEA450 in direction y satisfy the WBSC condition when HE340M columns are used and oriented as indicated in Figure 72.

## Interior column. Axial compression check

Relevant loaded area: 8 x 6 = 48 m$^2$

Floor weight is 5 kN/m$^2$, all included.

$G_{floor}$ = 48 x 5 = 240 kN/storey

$G_{walls}$ = (8 + 6)x 3 = 42 kN/storey

$G_{frame}$: 18,5 kN/storey

$Q$ = 3 kN/m$^2$ x 48 = 144 kN

1,35 $G$ + 1,5 $Q$ = 1,35 x 300,5 + 1,5 x 144 = 622 kN/storey

Compression in column at basement level: 6 x 622 = 3732 kN

Approximate buckling length: 2,9 m (equal to the storey height)

Slenderness (with HE340M section, weak axis, i = 79mm): 2900/79 = 36,7

Euler slenderness $\lambda_E$: 76,4 (S355 steel)

=> reduced slenderness $\bar{\lambda}$ = 0,48 => $\lambda$ = 0,85

$A_c$ = 31580 mm$^2$

$N_{b,Rd}$ = 0,85 x 31580 x 355 = 9529 kN > 3732 kN

www.EngineeringEbooksPdf.com

## Interior column. Plastic moment resistance at ground level.

Plastic hinges form in the bases of the columns at ground level as part of the global plastic mechanism. Their bending resistance has to be evaluated considering the interaction between axial force and bending, according to Eurocode 3 (EN1993-1-1 paragraph 6.2.9.1), for the seismic design condition. The axial force is found as the sum of the contribution of 6 storeys:

$N_{Ed} = G + \psi_{Ei\,Q} = (300{,}5 + 0{,}15 \times 144) \times 6 = 1932$ kN

The value $\psi_{Ei} = 0{,}15$ is derived from $\psi_{Ei} = \varphi\,\psi_{2i}$ with $\psi_{2i} = 0{,}3$ (offices) and $\varphi = 0{,}5$ (storeys occupied independently).

For the HE340M section: $N_{pl,Rd} = f_{yd} \times A = 355 \times 31580 = 11210.103$ N=11210 kN

$n = N_{Ed} / N_{pl,Rd} = 0{,}17$

$a = (A - 2b_{tf})/A = (31580 - 2 \times 309 \times 40)/31580 = 0{,}22 > 0{,}17$ (= $n$)

$M_{pl,y,Rd} = f_{yd} \times W_{pl,y,Rd} = 355 \times 4718.103 = 1674{,}89\ .\ 106$ Nmm =1674,89 kNm

$M_{N,y,Rd} = M_{pl,y,Rd}\,(1-n)/(1-0{,}5\,a) = 1674{,}89\ .\ 106 \times (1-0{,}17)/(1-0{,}5 \times 0{,}22) = 1562.106$ Nmm

$M_{N,y,Rd} = 1562$ kNm

As $n < a \Rightarrow M_{N,z,Rd} = M_{pl,z,Rd} = 355 \times 1953.103$ Nmm = 693 kNm

$M_{N,y,Rd} = 1562$ kNm and $M_{N,z,Rd} = 693$ kNm are the resisting moments. In 19.10, it is checked that they are greater than the design action effects considered for elements checks.

## Evaluation of the seismic mass

The unit used for mass is 'kg' (a mass of 1 kg corresponds to a 10N gravity force).

Total floor area for a single storey: 30 x 24 = 720 m$^2$

$G_{floor}$ = 500 kg/ m$^2$ x 720 = 360 000 kg /storey

Partitions and façade; total length for one storey: 30m x 4 + 24m x6 = 264 m

300 kg/m => 79200 kg / storey

$G_{roof}$ considers various pieces of equipment (elevator plant rooms, air conditioning, water tanks, etc) with an assumed mass of 79200 kg

$G_{frame}$:

| | |
|---|---|
| column HE340M: | 2,9 m x 24 x 248 Kg/m = 17260 kg |
| beams IPE500: | 8m x 3 x 6 x 90,7 Kg/m = 13060 kg |
| beams IPEA450: | 30m x 4 x 67,2 Kg/m = 8064 kg |
| total $G_{frame}$: | 38384 kg/storey |

$\psi_{Ei\,x\,Q}$ (service load)= $\psi_{Ei}$ x 300 kg/ m$^2$ x 720 m$^2$ = 0,15 x 300 x 720 = 32400 kg /storey

Seismic mass ($G + \psi_{Ei}\,Q$) of one storey: 360000 + 79200 + 38384 +32400 = 509984 kg

Seismic mass m = $G + \psi_{Ei}\,Q$ of the building (6 storeys): 6 (storeys) x 509984= 3060.10$^3$ kg

Interestingly, the steel frame represents only 7,5 % of the total seismic mass (and could be approximated as a constant mass in the first iterations of a design). The floors however represent 70 % of the total seismic mass m, so a reduction of the floor weight by means of an alternative flooring system would be an effective way to substantially reduce the earthquake actions (by reducing the seismic mass), and subsequently the cost of the building.



www.EngineeringEbooksPdf.com

## Evaluation of seismic design shear using the 'lateral forces' method

In this section the approximate 'lateral forces' method is considered (see 18).

Estimate the fundamental period of the structure using Table 7:
$T = C_t H^{3/4}$ $C_t = 0{,}085$ $H = 6\text{x } 2{,}9 \text{ m} = 17{,}4 \text{ m}$ => $T = 0{,}085 \text{ x } 17{,}4^{3/4} = 0{,}72 \text{ s}$

Calculate the corresponding design pseudo acceleration Sd (T): $T_C < T < T_D$
=> $S_d(T) = (2{,}5 \text{ x } a_g \text{ x } S \text{ x } T_C)/(q \text{ x } T) = (2{,}5 \text{ x } 2 \text{ x } 1{,}2 \text{ x } 0{,}5)/(4\text{x } 0{,}72) = 1{,}04 \text{ m/s}^2$

Calculate the seismic design shear $F_{bR}$
$F_{bR} = m\, S_d(T)\, \lambda = 3060.10^3 \text{ x } 1{,}04 \text{ x } 0{,}85 = 2705.10^3 \text{ N} = 2705 \text{ kN}$

$F_{bR}$ is the total design seismic shear applied to the building in either the x or y direction (they are the same because the estimation of $T$ is only related to the building height). This corresponds to a deformed shape which is purely translational in the x or y directions.

In this example, calculations are presented for frames in the x direction. All six frames are the same, and with a floor diaphragm that is assumed to be effective enough to evenly distribute the force, then the seismic design shear $F_{bX}$ in one frame is: $F_{bX} = F_{bR}/6 = 451$ kN

Torsional effects have to be added to the translational effects. In the structure analysed, due to double symmetry in the x and y directions, the centre of mass CM and the centre of rigidity CR are both, at all levels, at the geometrical centre of the building. This means that only accidental eccentricity results in torsional forces. In this example, torsion is therefore taken into account by amplifying $F_{bX}$ by $\delta = 1 + 0{,}6x/L$ as explained in 7. In this expression, $L$ is the horizontal dimension of the building perpendicular to the earthquake in direction $x$ (30m), while '$x$' is the distance from the centre of rigidity to the frame in which the effects of torsion are to be evauated. The greatest effect is obtained for the greatest $x$, which is $x = 0{,}5$ L (15m), so that: $\delta = 1 + 0{,}6 \text{ x } 0{,}5 = 1{,}3$
The design shear $F_{bX}$ including torsional effects is therefore: $F_{bX} = 1{,}3 \text{ x } 451 \text{ kN} = 586 \text{ kN}$

[Note: If the final design was to be based only on a planar analysis as described above, $\delta$ would be taken equal to: $\delta = 1 + 1{,}2\, x/L$, as prescribed in Eurocode 8. However, the example described here has been developed assuming that a final design using 3D modal response analysis will be performed after 'satisfactory' sizes of the beams and columns have been established. The value $(1 + 0{,}6\, x/L)$ used for $\delta$ is known to be close to the real value for the type of frame analysed].

**Definition of storey forces.**
As all storey seismic masses are equal the distribution of storey forces is triangular (see Figure 16), and the storey forces are given by :

$$F_i = F_b \cdot \frac{z_i}{\Sigma z_j}$$

The resultant design base shear $F_{bX}$ in frame X1, including torsional effects, is: $F_{bX} = 586$ kN
The storey forces are:
F1= 27,9 kN
F2= 55,8 kN
F3= 83,7 kN
F4= 111,6 kN
F5= 139,5 kN
F6= 167,5 kN

**Earthquake action effects.**
The earthquake action effects E are determined using a static analysis under the storey forces. Results are given in 19.11, where they are compared to those from a dynamic analysis.

www.EngineeringEbooksPdf.com

## Gravity load combined with earthquake effects

Beam sections are checked under combined earthquake and coincident gravity loading using the following combination: $G + \psi_{2i} Q = G + 0{,}3\ Q$
$\psi_{2i} Q = 0{,}3\ Q = 0{,}3 \times 300$ kg x 720 m$^2$ = 64800 kg /storey

The total design mass at one storey is:
$G + 0{,}3\ Q = 360000 + 79200 + 38384 + 64800 = 542384$ kg
Line X2 carries 1/5 of that mass (line X1 and X6 carry each 1/10, while lines X2 to X5 carry 1/5 each).
The vertical load ($G + \psi_{2i} Q$) /m of beam in line X2 is: 542384 / (5 x 24m) = 4520 kg/m
$G + \psi_{2i} Q = 45{,}2$ kN/m

## Dynamic analysis by spectral response and modal superposition method

A planar analysis of a single frame in line X1 is considered.

The seismic mass $G + \psi_{Ei} Q$ for one frame is 1/6 of the total seismic mass of the building. As the façade in direction x is 24m long and there are six levels of beams, the mass ($G + \psi_{Ei} Q$) /m of beam is: $G + \psi_{Ei} Q =$ 3060000/(6 x 6 x 24)= 3542 kg/m

The design peak ground acceleration is $a_g = 2{,}0$ m/s$^2$ . Torsional effects have to be added to the translation effects, and this is done by amplifying the action (the spectrum) by the factor $\delta = 1{,}3$ explained above, so that the value of ag considered for the analysis is :
$a_g = 2 \times 1{,}3 = 2{,}6$ m/s$^2$



www.EngineeringEbooksPdf.com

## Results of the analysis

Figure 73 presents bending moments under earthquake loading obtained by the lateral force method. Figure 74 presents bending moments under earthquake loading obtained by the dynamic analysis (spectral response – modal superposition) method. Due to the SRSS (Square Root of the Sum of the Squares) combination of modes, action effects such as bending moments are all defined as positive.

The bending moments shown in Figure 73 are a more realistic representation of the real bending moment diagram at a given time, with moments at the beam ends which are of opposite sign. Bending moments at any point in the structure can be either positive or negative, due to reversal of the earthquake action.

The values obtained by the dynamic analysis are smaller than those from the lateral force method. This is due to the use of correct values of periods in the dynamic analysis; the first mode period $T_1$ = 1,17 s is greater than the estimated 0,72s of the lateral force method (see 12.8), and a smaller pseudo acceleration $S_d(T)$ corresponds to a greater period $T_1$ for $T_1 > T_C$ of the design spectrum. The analysis also shows that first modal mass is 82,7 % of the total seismic mass m. The second modal period is $T_2$=0,368 s and the second modal mass is 10,4 % of the total seismic mass m. Figures 75 and 76 present the deformed shapes in vibration modes 1 and 2.

**Figure 73**
Diagram of bending moments under earthquake action obtained by the lateral force method. Units: kNm.

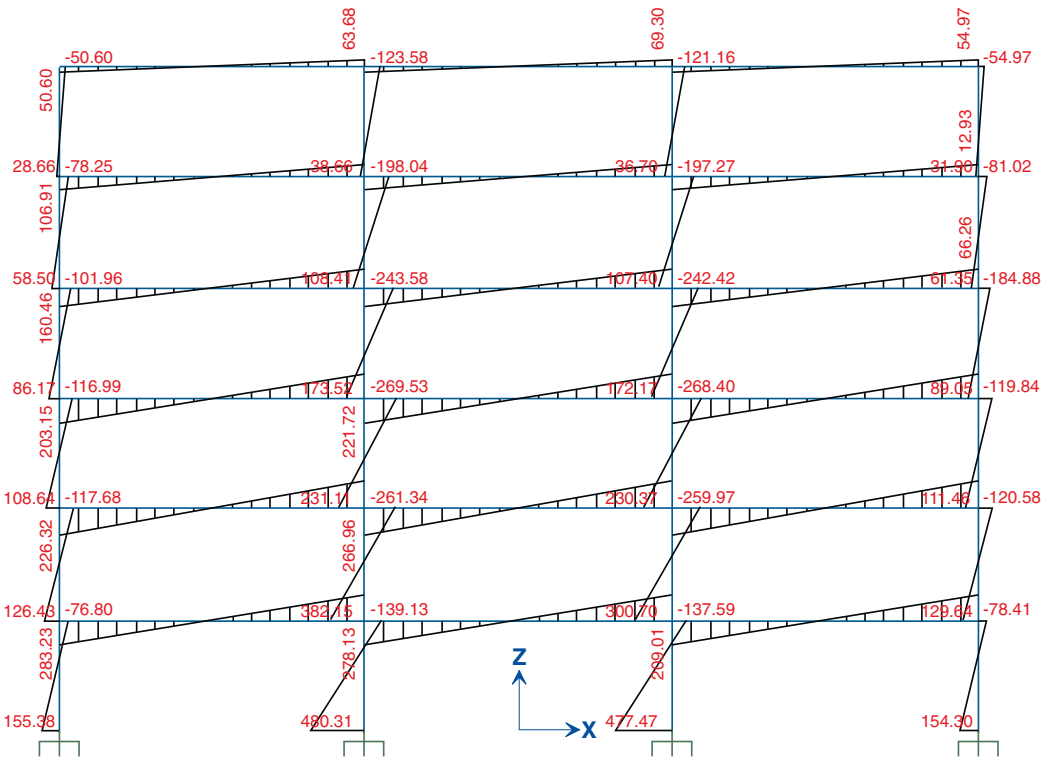


www.EngineeringEbooksPdf.com

Tables 18 and 19 give details of the checks made on the limitation of *P-Δ* effects with the results from both the lateral force method and the dynamic analysis. The values of the resultant base shear from both methods are indicated in those tables: 586,0 kN (lateral force method, for one frame) and 396,2 kN (dynamic response). It can be seen that the value of the parameter $\theta$ does not differ much from one type of analysis to the other. $\theta$ is ≤ 0,1 at storeys 1, 4, 5, 6 . Bending moments and other action effects found from the analysis at storeys 2 and 3 have to be increased by 1/ (1- $\theta$) (1,16 at storey 2 and 1,13 at storey 3).

**Figure 74**
Diagram of bending moments under earthquake action from the dynamic analysis. Units: kNm.

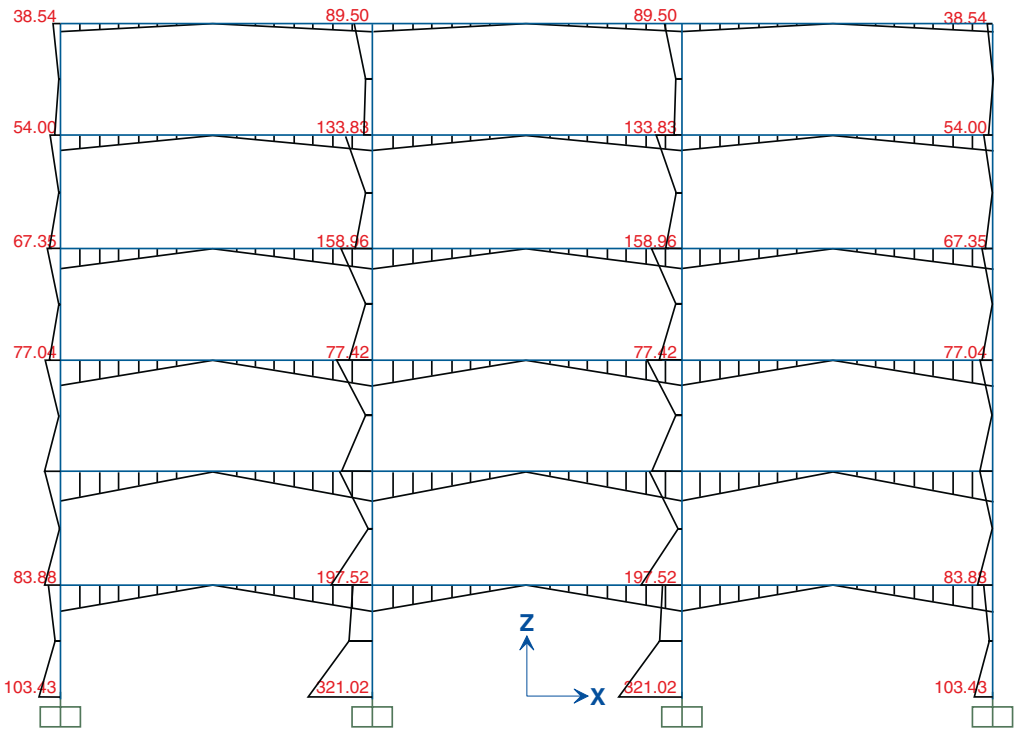




www.EngineeringEbooksPdf.com

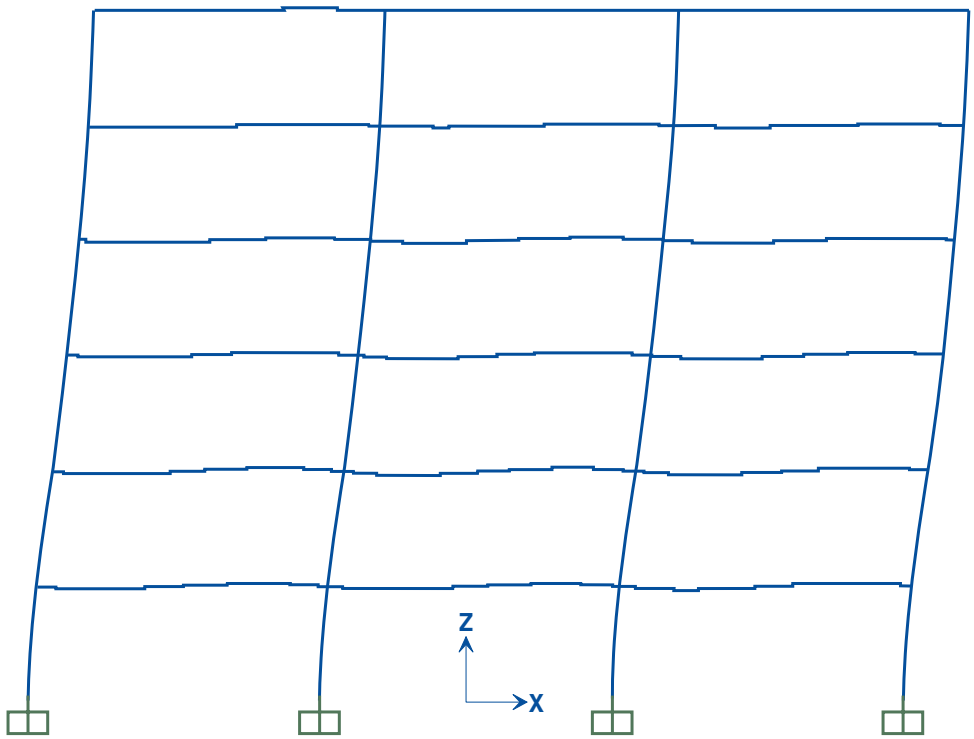


**Figure 75**
Deformed shape in vibration mode 1

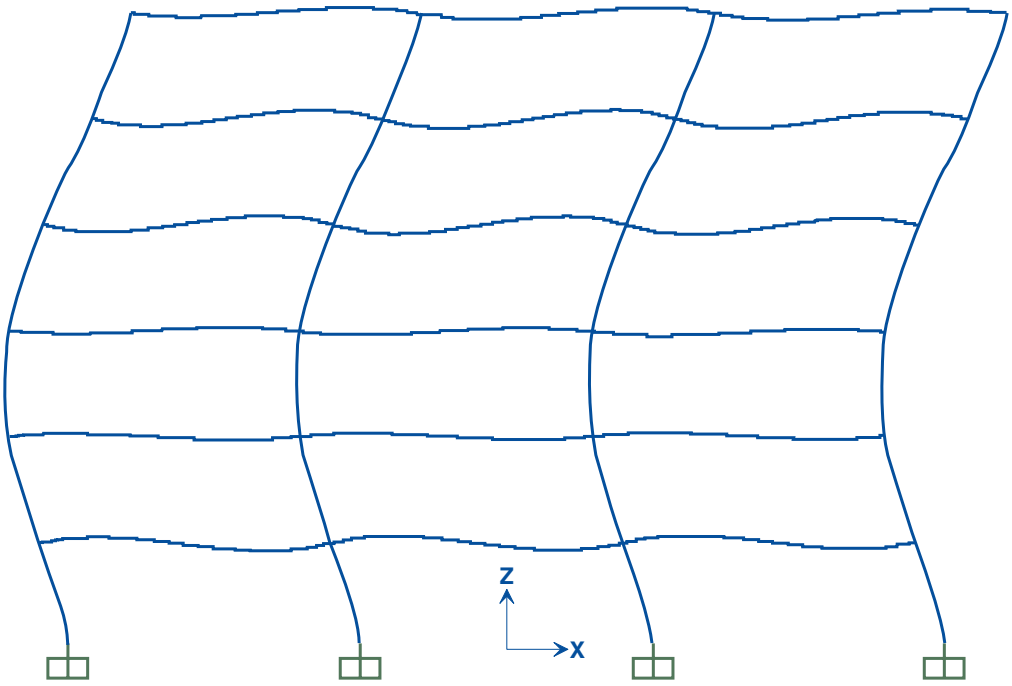


**Figure 76**
Deformed shape in vibration mode 2

www.EngineeringEbooksPdf.com

Figure 77 presents the bending moment diagram under the combination used for the checks of structural elements: $E + G + \psi_{2i} Q$ (in which bending moments are taken from the lateral force method).
The maximum beam moment is at storey 2: 509,8 kNm
With the 1/ (1- $\theta$) increase:
1,16 x 509,8 = 591,4 kNm
Beams are IPE500 : $M_{pl,Rd}$ = 2194.10$^3$ x 355 = 778,9 kNm > 591,4 kNm

The maximum moment in interior columns is: 427 kNm (at the base, as moments at storeys 1 and 2 are inferior to that value even with the 1/ (1- $\theta$) increase).
Interior columns are HE340M bending about their strong axis:
$M_{pl,Rd}$ = 4718.103 x 355 = 1674,9 kNm > 427 kNm

The maximum moment in exterior columns is 195,2 kNm ,at the base of columns (moments at storeys 1 and 2 are inferior to that value even with the 1/ (1- $\theta$) increase).
Exterior columns are HE340M bending about their weak axis:
$M_{pl,Rd}$ = 1953.103 x 355 = 693,3 kNm > 195,2 kNm

Checks under the service earthquake, which is assumed to be half of the design earthquake, raise no concerns. Interstorey drifts $D_s$ are half of those given in Tables 18 and 19, with a maximum: $D_s$ = 0,5 x 0,054 x 1/ (1- $\theta$) = 0,031m
$D_s$ / h = 0,031m / 2,9 = 0,0108 = 1,1 %

This value is acceptable with infills and partitions that are independent of the structure.

**Figure 77**
Bending moment diagram under the combination used for the checks of structural elements: $E + G + \psi_{2i} Q$. Units: kNm.

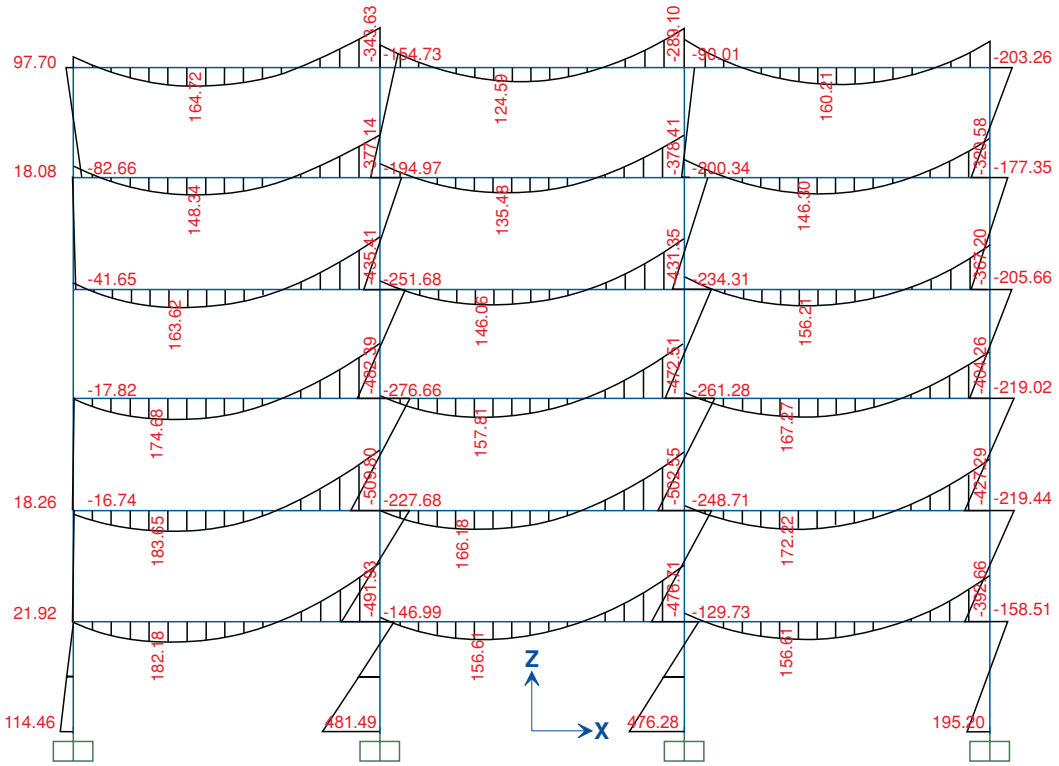




www.EngineeringEbooksPdf.com

**Table 18**
Results from the lateral force method analysis.

| Lateral force method | | | | | $= E_s + G + \psi_{Ei}.Q$ | | | | $G + \psi_{Ei}.Q = 35{,}42$ kN/m | | | | | |
|---|---|---|---|---|---|---|---|---|---|---|---|---|---|---|
| **Storey** | **Absolute displacement of the storey :** $d_i$ [m] | | **Design interstorey drift ($d_i$-$d_i$-1):** $d_r$ [m] | | **Storey lateral forces $E_i$:** $V_i$ [kN] | | **Shear at storey $E_i$:** $V_{tot}$ [kN] | | **Total cumulative gravity load at storey $E_i$:** $P_{tot}$ [kN] | | **Storey height $E_i$:** $h_i$ [m] | | **Interstorey drift sensitivity coefficient ($E_i$-$E_i$-1) :** $\theta$ | |
| $E_0$ | $d_0$ | 0 | $d_{r0}$ | | | | | | | | | | | |
| $E_1$ | $d_1$ | 0,033 | $d_{r1}$ | 0,033 | $V_1$ | 27,9 | $V_{tot\ 1}$ | 586,0 | $P_{tot\ 1}$ | 5100 | $h_1$ | 2,9 | $\theta_1$ | 0,100 |
| $E_2$ | $d_2$ | 0,087 | $d_{r2}$ | 0,054 | $V_2$ | 55,8 | $V_{tot\ 2}$ | 558,1 | $P_{tot\ 2}$ | 4250 | $h_2$ | 2,9 | $\theta_2$ | 0,141 |
| $E_3$ | $d_3$ | 0,139 | $d_{r3}$ | 0,052 | $V_3$ | 83,7 | $V_{tot\ 3}$ | 502,3 | $P_{tot\ 3}$ | 3400 | $h_3$ | 2,9 | $\theta_3$ | 0,122 |
| $E_4$ | $d_4$ | 0,184 | $d_{r4}$ | 0,044 | $V_4$ | 111,6 | $V_{tot\ 4}$ | 418,6 | $P_{tot\ 4}$ | 2550 | $h_4$ | 2,9 | $\theta_4$ | 0,093 |
| $E_5$ | $d_5$ | 0,216 | $d_{r5}$ | 0,033 | $V_5$ | 139,5 | $V_{tot\ 5}$ | 307,0 | $P_{tot\ 5}$ | 1700 | $h_5$ | 2,9 | $\theta_5$ | 0,062 |
| $E_6$ | $d_6$ | 0,238 | $d_{r6}$ | 0,021 | $V_6$ | 167,5 | $V_{tot\ 6}$ | 167,5 | $P_{tot\ 6}$ | 850 | $h_6$ | 2,9 | $\theta_6$ | 0,037 |
| Behaviour factor : | | $q = 4$ | | | | | | | | | | | $\theta = \frac{P_{tot} \cdot d_r}{V_{tot} \cdot h} \leq 0{,}10$ | |

**Table 19**
Results from the modal superposition analysis.

| Modal superposition Dynamic analysis. | | | | | $= E_s + G + \psi_{Ei}.Q$ | | | | $G + \psi_{Ei}.Q = 35{,}42$ kN/m | | | | | |
|---|---|---|---|---|---|---|---|---|---|---|---|---|---|---|
| **Storey** | **Absolute displacement of the storey :** $d_i$ [m] | | **Design interstorey drift ($d_i$-$d_i$-1):** $d_r$ [m] | | **Storey lateral forces $E_i$:** $V_i$ [kN] | | **Shear at storey $E_i$:** $V_{tot}$ [kN] | | **Total cumulative gravity load at storey $E_i$:** $P_{tot}$ [kN] | | **Storey height $E_i$:** $h_i$ [m] | | **Interstorey drift sensitivity coefficient ($E_i$-$E_i$-1) :** $\theta$ | |
| $E_0$ | $d_0$ | 0 | $d_{r0}$ | | | | | | | | | | | |
| $E_1$ | $d_1$ | 0,022 | $d_{r1}$ | 0,022 | $V_1$ | 26,6 | $V_{tot\ 1}$ | 396,2 | $P_{tot\ 1}$ | 5100 | $h_1$ | 2,9 | $\theta_1$ | 0,099 |
| $E_2$ | $d_2$ | 0,057 | $d_{r2}$ | 0,035 | $V_2$ | 42,9 | $V_{tot\ 2}$ | 369,7 | $P_{tot\ 2}$ | 4250 | $h_2$ | 2,9 | $\theta_2$ | 0,137 |
| $E_3$ | $d_3$ | 0,090 | $d_{r3}$ | 0,033 | $V_3$ | 50,0 | $V_{tot\ 3}$ | 326,8 | $P_{tot\ 3}$ | 3400 | $h_3$ | 2,9 | $\theta_3$ | 0,118 |
| $E_4$ | $d_4$ | 0,117 | $d_{r4}$ | 0,027 | $V_4$ | 61,1 | $V_{tot\ 4}$ | 276,7 | $P_{tot\ 4}$ | 2550 | $h_4$ | 2,9 | $\theta_4$ | 0,086 |
| $E_5$ | $d_5$ | 0,137 | $d_{r5}$ | 0,020 | $V_5$ | 85,0 | $V_{tot\ 5}$ | 215,6 | $P_{tot\ 5}$ | 1700 | $h_5$ | 2,9 | $\theta_5$ | 0,054 |
| $E_6$ | $d_6$ | 0,148 | $d_{r6}$ | 0,012 | $V_6$ | 130,6 | $V_{tot\ 6}$ | 130,6 | $P_{tot\ 6}$ | 850 | $h_6$ | 2,9 | $\theta_6$ | 0,027 |
| Behaviour factor : | | q = 4 | | | | | | | | | | | $\theta = \frac{P_{tot} \cdot d_r}{V_{tot} \cdot h} \leq 0{,}10$ | |

www.EngineeringEbooksPdf.com

# Design of beam to column connection at an interior joint in line X2

The example connection in line X2 connects an IPE500 beam to a HE340M column. Both are made of S355 steel. A connection type valid for a Ductility Class DCH, as defined in Table 9, is selected. This is an unstiffened end plate connection as shown schematically in Figure 36; extended end plates are welded to the beam during fabrication and bolted to the column flanges on site. The design also involves consideration of the beam connections in line Y2, which are similar; extended end plates are welded to the IPEA450 beams during fabrication and are bolted on site to vertical plates welded to the columns flanges (see Figures 78 and 79). Design checks are presented below for the connections in line X2 only.

**Design moment and shear at the connection of the IPE500 beam.**
The design moment and shear are related to a design situation in which plastic hinges are formed at all the beams ends in line X2 (at all storeys). The design values are established considering possible beam material real strength that is greater than the nominal $f_y$ =355 N/mm$^2$. This is achieved using a $\gamma_{ov}$ factor, and a partial safety factor of 1,1:
$M_{Rd,connection} \geq 1{,}1\ \gamma_{ov}\ M_{pl,Rd,beam} = 1{,}1$ x 1,25 x 778,9 = 1071 kNm

$V_{Ed,E} = 2\ M_{pl,Rd,beam} / l = 2$ x 778,9 /8 = 194,7 kN

$V_{Ed,G}$ is found under $G + \psi_{2i}\ Q$ (= 45,2 kN/m, see above)

$V_{Ed,G} = 0{,}5$ x 8 x 45,2 = 180,8 kN

$V_{Rd,connection} \geq 180{,}8 + 1{,}1$ x 1,25 x 194,7 = 448,5 kN

Given the design values of bending moment and shear, the design is based on the requirements of Eurocode 3 (EN1993-1-8) with additional consideration of some specific requirements from Eurocode 8 (EN1998-1:2004) as explained in Sections 6, 8 and 9.

**Design of welds between end plates and beams.**
Butt welds with adequate preparation and execution (V grooves, welding from both side) satisfy the overstrength design criterion by default so no calculation is needed.

**Design of bolts.**
The bending moment $M_{Rd,connection}$ is transferred by 4 rows of 2 M36 grade 10.9 bolts.
For row 1, $h_r$ = 500 – 16 + 70 = 554 mm.
For row 2, $h_r$ = 500 – 16 - 70 = 414 mm.

The resistance $F_{tr,Rd}$ of an M36 grade 10.9 bolt in tension is:
$F_{tr,Rd} = 0{,}9\ f_u A_s / \gamma_{M2} = 0{,}9$ x 1000 x 817 /1,25 = 735,3 kN/1,25 = 588,2 kN

$M_{Rd,assemblage}$ = (554 + 414) x 2 x 588,2 = 1138.10$^3$ kNmm = 1138 kNm > 1071 kNm

Shear is transferred by 6 M20 grade 10.9 bolts placed on both sides of the web and designed to carry the design shear in its entirety.
Design resistance of bolts in shear:
6 x 122,5 / 1,25 = 588 kN > 448,5 kN

Design bearing resistance of plate (40 mm thickness, see below):
$V_{Rd,plate}$= (6 x 193 x 40)/ (10 x 1,25)= 3705 kN > 448,5 kN

**Design of end plate.**
The total design tension force $F_{tr,Rd}$ applied by one flange to the end plate is:
$F_{tr,Rd} = M_{Rd}$ / (500- 16) =1071.10$^3$ / 484 = 2213 kN

The virtual work equation on which end plate design in EN1993-1-8 is based indicates:
$4\ M_{pl,1,Rd} \times \theta = F_{tr,Rd} \times \theta \times m$

$\theta$ is the rotation in a plastic yield line over the width of the plate (the yield line is horizontal); $M_{pl,1,Rd}$ is the plastic moment developed along this yield line; 4 is the number of yield lines when prying action is accepted – Figure 80; $m$ is the distance from the bolt axis to the flange surface (70 mm, see Figure 79).
For yielding to develop in the beam and not in the plate the following condition should be satisfied:
$4\ M_{pl,1,Rd} \times \theta > F_{tr,Rd} \times \theta \times m$
$M_{pl,1,Rd} = (l_{eff} \times t^2 \times f_y) / 4\gamma_{M0}$
$l_{eff}$ = 300 mm
$\gamma_{M0}$ = 1,0
$f_y$ = 355 N/mm$^2$
(4 x 300 x $t^2$ x 355) /4 = 2213.10$^3$ x 70
=> $t$ = 38,1 mm as minimum => $t$ = 40 mm

**Note.**
As:

- the thickness $t_f$ of the column flange is also 40 mm
- the distance to the column web is (150/2) – ($t_w$ /2)= 75 – 21/2 = 64,5 mm < 70 mm
- the length of a potential vertical yield line in the column flange is (70 + 16 + 70) + (2x70) = 296 mm ≈~300 mm

It can be deduced that the flange has the required resistance to accommodate the tension from the connection, without need of transverse stiffeners.



www.EngineeringEbooksPdf.com

**Check of resistance of end plate and column flange to punching.**

The resistance $B_{p,Rd}$ of the end plate and of the column flange to punching by one bolt should be greater than the tension $F_{tr,Rd}$ that can be applied by that bolt: $B_{p,Rd} > F_{tr,Rd}$

The check is identical for both the end plate and the column flange since they have the same thickness (40 mm) and yield strength (355 N/mm$^2$).

$F_{tr,Rd}$ = 2213 / 4 = 553 kN

$B_{p,Rd}$ is taken as the shear resistance corresponding to punching out a cylinder of diameter $d_m$ of the head of the bolt (58 mm for a M36 bolt) and thickness $t_p$ of the plate (40 mm):

$B_{p,Rd}$ =0,6 x 3,14 x 58 x 40 x 500 /1,25= 2185.103 N = 2185 kN > 553 kN

**Check of column web panel in shear.**

In the design situation plastic hinges are formed in the beam sections adjacent to the column on its left and right sides. The horizontal design shear $V_{wp,Ed}$ in the panel zone is therefore equal to:

$V_{wp,Ed} = M_{pl,Rd,\,left} / (d_{left} - 2t_{f,left}) + M_{pl,Rd,\,right} / (d_{right} - 2t_{f,right}) + V_{Sd,\,c}$

Neglecting $V_{Sd,c}$:

$V$ = 2 x 1071. 10$^3$ /(377-2x40) = 7212 kN

$V_{wb,Rd} = (0{,}9\, f_y A_{wc}) / (\sqrt{3} \times \gamma_{M0})$

= (0,9 x 355 x 9893) / (√3 x 1,0)

= 1824.10$^3$ N

$V_{wb,Rd}$ = 1824 kN << 7212 kN

The column web area therefore needs to be increased by adding plates with a shear resistance of: 7212 – 1824 = 5388 kN

This corresponds to an additional shear area: (5388.10$^3$ √3 ) / (355 x 0,9) = 29209 mm$^2$

The design of the connections for the beams oriented in the y direction requires two plates of 297 mm length and thickness equal to: 29209/ (2 x 297)= 49,2 mm => 50 mm. (Figure 78).

**Check of column web panel in transverse compression.**

This check refers to cl. 6.2.6.2 of EN1993-1-8.

$F_{c,wc,Rd} = \omega\, k_{wc}\, b_{eff,c,wc}\, t_{wc}\, f_{y,wc} / \gamma_{M0}$

A simple check is made by:

- setting $\omega$ and $k_{wc}$ at 1,0 and taking $b_{eff,c,wc} = t_{fb} + 5(t_{fc} + s)$= 16 + 5 (40 + 27) = 351 mm (both of these are safe-sided assumptions)
- $\gamma_{M0}$=1,0
- ignoring the connecting plates of beams in the y direction

$F_{c,wc,Rd}$ = 351 x 21 x 355 = 2616.10$^3$

$N$ = 2616 kN > $F_{tr,Rd}$ = 2213 kN

The check is therefore satisfied. A more comprehensive check would include taking the connecting plates of beams in the y direction into account:

$b_{eff,c,wc} = t_{fb} + 5(t_{fc} + s)$= 16 + 5 (40 + 27+ 40 + 40)= 751 mm

**Check of column web panel in transverse tension.**

This check refers to cl. 6.2.6.3 of EN1993-1-8.

$F_{c,wc,Rd} = \omega\, b_{eff,c,wc}\, t_{wc}\, f_{y,wc} / \gamma_{M0}$

The check is identical to the one above, and is therefore satisfied.

www.EngineeringEbooksPdf.com

## Comment on design options

The design presented above is governed by the limitation of deflections, both in terms of *P-Δ* effects under the design earthquake loading and inter-storey drift under the serviceablity earthquake loading. This means that the section sizes chosen for the beams inevitably possess a safety margin for resistance; $M_{pl,Rd}$ = 778,9 kNm > $M_{Ed}$=591,4 kNm (which is the worst case applied moment).

Making use of redistribution of moments (see 10.) would not enable smaller beam sections to be used, as this would result in an unacceptable level of flexibility in the structure.

Reducing the beam sections locally, close to the connections ('dogbones' or RBS, see Figures 33 and 38) should however be considered. Such an approach would only change the structure stiffness by a few percent so it would still comply with design requirements for deformation, but would provide a useful reduction in the design moments (and shears) applied to the beam to column connections. At the interior joints the IPE500 plastic moment $M_{pl,Rd}$ could be reduced by the ratio 778,9/591,4 = 1,32 (that is a 32% reduction). Using RBS would allow reduced bolt diameters and end plate thicknesses. At the connections to the perimeter columns, where IPE500 beams are connected into the column minor axis, the reduction could be greater since the maximum value of $M_{Ed}$ is only 481 kNm allowing a reduction ratio of 1,61 (that is 61% reduction).

**Figure 78**
Plan view of beam to column connections.

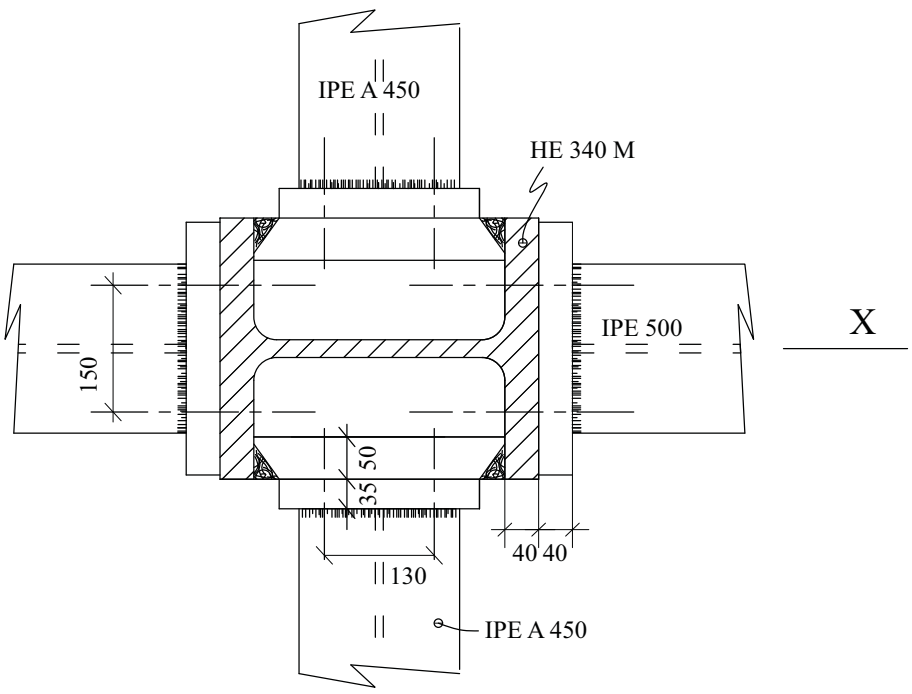




www.EngineeringEbooksPdf.com

Other design options could be considered to reduce fabrication and construction costs. Using nominally pinned connections for the beams framing into the column minor axes would simplify the column 'nodes'. The loss of frame stiffness could be compensated by using deeper beam and column sections. Alternatively, it might be interesting to reduce the number of frames that provide most of the earthquake resistance. For instance, frames in lines Y1 and Y4 could be dedicated to earthquake resistance in the y direction, while frames in lines X1, X4 and X6 could be dedicated to earthquake resistance in the x direction. Smaller beam sections and low cost connections could be used in the frames on other grid lines.

**Figure 79**
Elevation of beam to column connections.

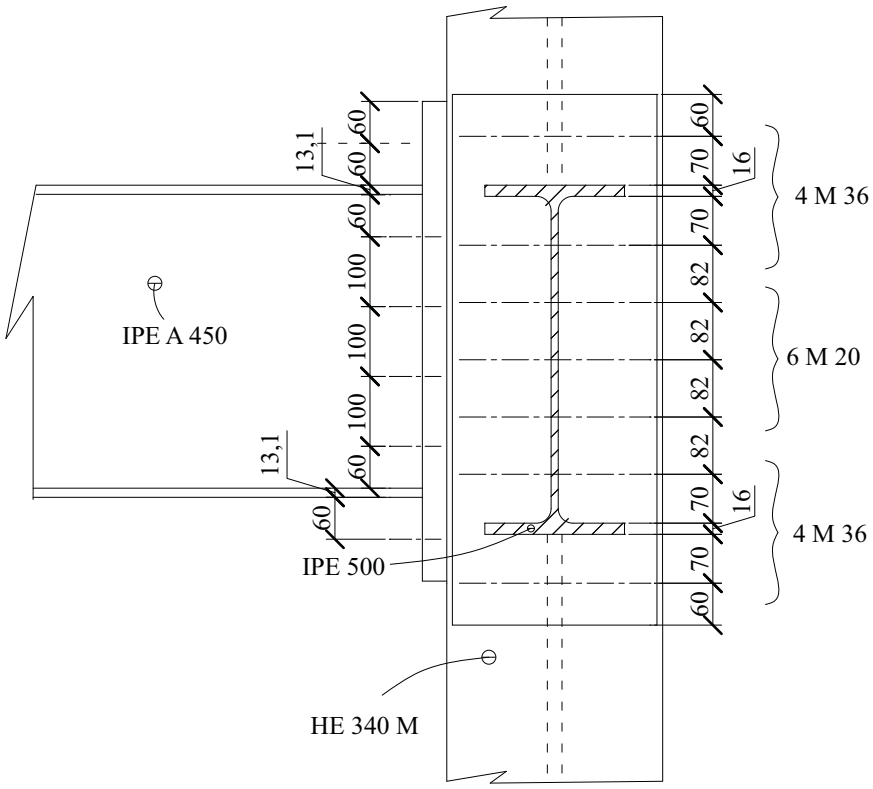


**Figure 80**
Plastic deformation mechanism in the end plate of the IPE500 beam.

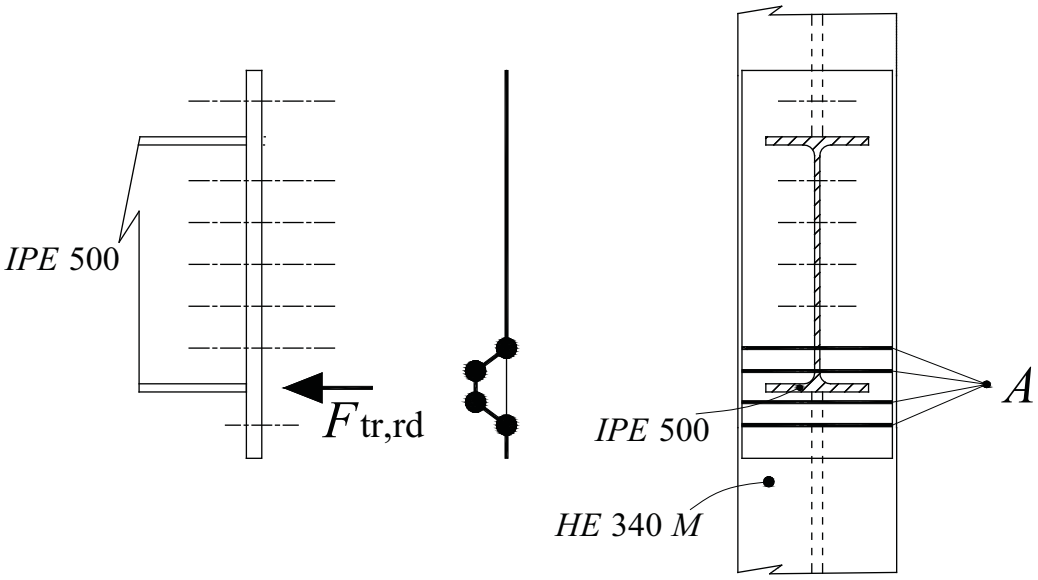


www.EngineeringEbooksPdf.com

# Design of reduced beam sections

**Objective.**
The analysis has indicated a maximum bending moment of 591,4 kNm in the IPE500 beams in the x direction under the seismic load combination $E + G + \psi_{2i} Q$. As mentioned in 19.12, because the beams are deflection governed there is an excess of resistance which is equal to: 778,9 : 591,4 = 1,32. The objective in considering the use of reduced beam sections is to limit the beam end moment to a value at or near to 591,4 kNm.

In principle this could be achieved by trimming the flanges of the beam adjacent to the column connection, but experiments have shown that better ductility is achieved by locating the reduced section some distance away from the beam end. This means the limiting moment has a slightly different value, which must be determined (see Figure 40). The design moment to consider is influenced by the increase in flexibility due to the reduced beam section. In the paragraphs that follow, the design moment in the RBS is evaluated considering these two factors.

**Influence of increase in flexibility due to RBS.**
Reducing the beam sections (RBS) increases frame flexibility and therefore drift by an estimated 7% (see [6] [7]), which results in an increase in $\theta$ also of 7%. Therefore the amplification factors $1/(1-\theta)$ which are given in Table 17 should be recalculated considering the modified values of $\theta$ as shown in Table 20.

Only the worst case value [$1/(1-\theta) = 1{,}17$] is considered in the design, because all RBS will have the same dimensions at all levels. The maximum moment applied at the beam ends under the combination $E + G + \psi_{2i} Q$, without considering the amplification factors $1/(1-\theta)$, was 509,8 kNm. When reduced sections are used that maximum moment is amplified by 1,17 due to the increase in flexibility:
1,17 x 509,8 = 596,5 kNm

Clearly this value is not very different from the value without RBS (591,4 kN)

**Influence of RBS distance to connection.**
To take into account the fact that the RBS is located at some distance away from the column face, it is necessary to choose dimensions which comply with the guidance given in Section 10. Consider:
$a$ = 0,5 x b = 0,5 x 200 = 100 mm
$s$ = 0,65 x d = 0,65 x 500 = 325 mm

The distance from the RBS to the column face is $a + s/2$ (see Figure 38).
$a + s/2$ = 162,5 + 100 = 262, 5 mm
The maximum moment is obtained at the beam end, and the bending moment diagram (shown in Figure 74) can be approximated as being linear between the beam end and 1/3 span point, so that the design bending moment in the RBS is as follows.
1/3 span = 8000 / 3 = 2666 mm
$M_{d,RBS}$ = 596,5 x (2666 – 262,5) / 2666 = 537 kNm

**Table 20**
Modified amplification factors $1/(1-\theta)$

| Storey | Interstorey drift sensitivity coefficient $\theta$ | | Modified amplification factors $1/(1-\theta)$ |
|---|---|---|---|
| | Without RBS | With RBS | With RBS |
| 1 | 0,099 | 0,105 | 1,11 |
| 2 | 0,137 | 0,147 | 1,17 |
| 3 | 0,118 | 0,126 | 1,14 |
| 4 | 0,086 | 0,092 | 1 |
| 5 | 0,054 | 0,057 | 1 |
| 6 | 0,027 | 0,028 | 1 |



www.EngineeringEbooksPdf.com

**Definition of section cuts at RBS.**

As indicated in Section 9, the RBS cut dimension c should be in the range c = 0,20 b to 0,25 b

Consider c= 0,22b = 0,22 x 200 = 44 mm .

The plastic moment of an IPE500 section (without any reduction) is equal to:

$W_{pl,y\,fy}$ = 2194.10$^3$ x 355 = 778. 10$^6$ Nmm

This results from the addition of:

Flange moment: $b\,t_f f_y\,(d - t_f)$ = 16 x 200 x 355 (500 – 16) = 549. 10$^6$ Nmm

Web moment: $t_w f_y\,(d - 2t_f)^2 / 4$ = 10,2 x 355 x (500 – 32)$^2$ = 198. 10$^6$ Nmm

Moment due to root radii at web-flange junctions: = (778 – 549 – 198) = 31. 10$^6$ Nmm

The plastic moment of a 'reduced' IPE500 (RBS) is calculated as follows:

$b_e = b - 2c$ = 200 - 88 = 120 mm.

Flange moment: $b_e\,t_f f_y\,(d - t_f)$ = 16 x 112 x 355 (500 – 16) = 308. 10$^6$ Nmm

RBS plastic moment: $M_{pl,Rd,RBS}$ = ( 308 + 198 + 31 ) . 10$^6$ = 537. 10$^6$ Nmm = 537 kNm

For fabrication purposes it is also necessary to know the radius R of the cut (see Figure 38).

This is calculated as: $R = (4c^2 + s^2) / 8c$ = (4 x 32$^2$ + 325$^2$)/(8 x 32) = 857 mm.

**Design moment and design shear at the connection.**

The shear in the RBS due to the earthquake action corresponds to the situation when plastic hinges form at the left and right hand ends of the beam. This is therefore given by:

$V_{Ed,E} = 2\,M_{pl,Rd,,RBS} / L'$

in which L' is the distance between the plastic hinges at the extremities of the beam.

$L'$= 8000 – 377 - (2 x 262,5) = 7098 mm = 7,098 m

$V_{Ed,E}$ = 2 x 537 / 7,098 = 151 kN

The shear $V_{Ed,G}$ in the RBS due to gravity loading $G + \psi_{2i} Q$ is :

$V_{Ed,G}$ = 0,5 x 7,098 x 45,2 = 160,4 kN

The total shear in the RBS is:

$V_{Ed,E} = V_{Ed,G} + 1{,}1\,\gamma_{ov}\,V_{Ed,E}$ =160,4 + 1,1 x 1,25 x 151 = 368 kN

The design moment $M_{Ed,connection}$ applied to the beam end connections is:

$M_{Ed,connection} = 1{,}1\,\gamma_{ov}\,M_{pl,Rd,,RBS} + V_{Ed,E} \times X$

With $X = a + s/2$ = 262, 5 mm

$M_{Ed,connection}$ = 1,1 x 1,25 x 537 + 368 x 0,2625 = 834 kNm

Thanks to the RBS, the design moment $M_{Ed,connection}$ for the beam end connections has been reduced from 1071 kNm down to 834 kNm. The reduction in design moment for the connections, due to RBS, is therefore 28%.

The design check for shear at the connection is:

$V_{Rd,connection} \geq V_{Ed} = V_{Ed,G} + 1{,}1\,\gamma_{ov}\,\Omega\,V_{Ed,E}$

The condition was:

$V_{Rd,connection} \geq$ 448 kN without RBS.

It is :

$V_{Rd,connection} \geq$ 368 kN with RBS

The reduction in design shear at the connection, due to RBS, is therefore 21%.

www.EngineeringEbooksPdf.com

## Economy due to RBS

The use of reduced beam sections will contribute significantly to the economy of the design by allowing a reduction of 28% in the design moment at the connection. This reduction is also reflected in the design shear applied to the panel zone of the column. Both types of reduction can bring significant reductions in cost.



www.EngineeringEbooksPdf.com

## Annex A

Definition of Eurocode 8 design response spectra.

For the horizontal components of the seismic action, the design horizontal acceleration response spectrum $S_d(T)$ is defined by the following expressions. These apply throughout Europe.

$a_g = \gamma_I a_{gr}$

$a_{gR}$ : maximum reference acceleration at the level of class A bedrock.

$$0 \le T \le T_B : S_d(T) = a_g \cdot S \cdot \left[\frac{2}{3} + \frac{T}{T_B} \cdot \left(\frac{2,5}{q} - \frac{2}{3}\right)\right]$$

$$T_B \le T \le T_C : \quad S_d(T) = a_g \cdot S \cdot \frac{2,5}{q}$$

$$T_C \le T \le T_D : S_d(T) \begin{cases} = a_g \cdot S \cdot \frac{2,5}{q} \cdot \left[\frac{T_C}{T}\right] \\ \ge \beta \cdot a_g \end{cases}$$

$$T_D \le T : \quad S_d(T) \begin{cases} = a_g \cdot S \cdot \frac{2,5}{q} \cdot \left[\frac{T_C T_D}{T^2}\right] \\ \ge \beta \cdot a_g \end{cases}$$

$S(T)$ is the design horizontal acceleration response spectrum;

$S_d(T)$ is the design horizontal acceleration response spectrum;

$T$ is the vibration period of a linear single-degree-of-freedom system;

$a_g$ is the design ground acceleration on type A ground ($a_g = \gamma_I a_{gR}$);

$T_B$ is the lower limit of the period of the constant spectral acceleration branch;

$T_C$ is the upper limit of the period of the constant spectral acceleration branch;

$T_D$ is the value defining the beginning of the constant displacement response range of the spectrum;

$S$ is the soil factor (see Table 2);

$\eta$ is the damping correction factor with a reference value of $\eta = 1$ for 5% viscous damping.

$$\eta = \sqrt{10/(5+\xi)} \ge 0,55$$

, where $\xi$ is the viscous damping ratio of the structure, expressed as a percentage.

## Annex B

ArcelorMittal Available Steels.
The available steel grades, their mechanical and chemical characteristics as well as the dimensions of the profiles can be downloaded on:

**sections.arcelormittal.com**

www.EngineeringEbooksPdf.com

# References

[1] EN 1998-1:2004. Design of Structures for Earthquake Resistance. Part 1: General Rules, Seismic Actions and Rules for Buildings.( Eurocode 8). CEN, European Committee for Standardisation.
[2] Seismic Resistance of Composite Structures - Report EUR 14428 EN. 1992 . Publication of the Commission of European Communities.

[3] A.Plumier. New Idea for Safe Structures in seismic Zones. IABSE Symposium. Mixed Structures Including New Materials - Brussels 1990.pp. 431 - 436.

[4] A.Plumier. The Dogbone - Back to the Future. AISC Engineering Journal -Second quarter 1997 - Volume 34, n°2.

[5] Paulay and Priestley, Seismic Design of Reinforced Concrete and Masonry Buildings, Wiley Ed.,1992

[6] Moment Connections For Seismic Applications. Canadian Institute for Steel Construction.2004. ISBN 0-88811-106-1

[7] Recommended Seismic Design Criteria For New Steel Moment-Frame Buildings. FEMA 350. July 2000.

[8] Seismic Provisions for Structural Steel Buildings. AISC 341-02.May 2002.

[9] I. Vayas, L. Calado, C. Castiglioni, A. Plumier, P. Thanopoulos.Behaviour of Seismic Resistant Braced Frames with Innovative Dissipative (INERD) Connections . EUROSTEEL. 2005. ISBN 3-86130-812-6.

[10] A.Plumier, R. Agatino, A. Castellani, C. Castiglioni, C. Chesi. Resistance of Steel Connections to Low Cycle Fatigue. XIth European Conference on Earthquake Engineering. Paris. September 1998.

[11] Moment resisting Connections of Steel Frames in Seismic Areas. Design and Reliability. Edited by F. MAZZOLANI; E&F SPON Editions, 2000; ISBN 0-415-23577-4.

[12] Two Innovations for Earthquake Resistant Design: the INERD Project. Rapport EUR 22044 EN, ISBN 92-79-01694-6, 2006, Publication office: Publications.europa.eu.

[13] Fardis, Carvalho, Elnashai, Faccioli, Pinto, Plumier.Designer's Guide to Eurocode 8. Thomas Telford Publisher. ISBN 07277-3348-6 .2005.

[14] Guide des Dispositions Constructives Parasismiques des Ouvrages en Acier, Béton, Bois et Maçonnerie. AFPS (Association Française du Génie Parasismique). Presses de l'Ecole Nationale des Ponts et Chaussées.2005. ISBN 2-85798-416-0.

[15] ICONS Report 4. Composite Steel Concrete Structures'. Laboratorio Nacional de Engenharia Civil. A. Plumier & C. Doneux Editors (2001). Editor. Lisbon-Portugal.

[16] Sanchez, L and Plumier, A. 'Particularities raised by the evaluation of load reduction factors for the seismic design of composite steel concrete structures', Proceedings of the SDSS'99 Stability and Ductility of Steel Structures Colloquium, Timisoara, 1999.

[17] C. Doneux and A. Plumier, Distribution of stresses in the slab of composite steel concrete moment resisting frames submitted to earthquake action. Der Stahlbau 6/99.

[18] M. Zacek, Construire parasismique, Editions Parenthèses / ISBN 2-86364-054-2, 1996.



www.EngineeringEbooksPdf.com

# Technical advisory & Finishing

## Technical advisory

We are happy to provide free technical advice to optimise the use of our products and solutions in your projects and to answer your questions about the use of sections and merchant bars. This technical advice covers the design of structural elements, construction details, surface protection, fire safety, metallurgy and welding.

Our specialists are ready to support your initiatives anywhere in the world.

To facilitate the design of your projects, we also offer software and technical documentation that you can consult or download from our website:

**sections.arcelormittal.com**

## Finishing

As a complement to the technical capacities of our partners, we are equipped with high-performance finishing tools and offer a wide range of services, such as:

- drilling
- flame cutting
- T cut-outs
- notching
- cambering
- curving
- straightening
- cold sawing to exact length
- welding and fitting of studs
- shot and sand blasting
- surface treatment

## Construction

At ArcelorMittal we also have a team of multi-product professionals specialising in the construction market.

A complete range of products and solutions dedicated to construction in all its forms: structures, façades, roofing, etc. is available from the website

**www.constructalia.com**

www.EngineeringEbooksPdf.com

# Your partners

ArcelorMittal
Commercial Sections
66, rue de Luxembourg
L-4221 Esch-sur-Alzette
Luxembourg
Tel: +352 5313 3010
Fax: +352 5313 2799

**sections.arcelormittal.com**

We operate in more than 60 countries on all five continents. Please have a look at our website under "About us" to find our local agency in your country.

Although every care has been taken during the production of this brochure, we regret that we cannot accept any liability in respect of any incorrect information it may contain or any damages which may arise through the misinterpretation of its contents.



www.EngineeringEbooksPdf.com

ArcelorMittal
Commercial Sections

66, rue de Luxembourg
L-4221 Esch-sur-Alzette
LUXEMBOURG
Tel.: + 352 5313 3010
Fax: + 352 5313 2799

sections.arcelormittal.com

Version 20140-1

FSC
Mixed Sources
Product group from well-managed forests, and other controlled sources
www.fsc.org Cert no. EUR-COC-051203
© 1996 Forest Stewardship Council

www.EngineeringEbooksPdf.com